SHEET OF

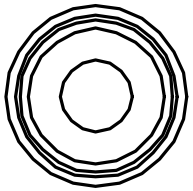

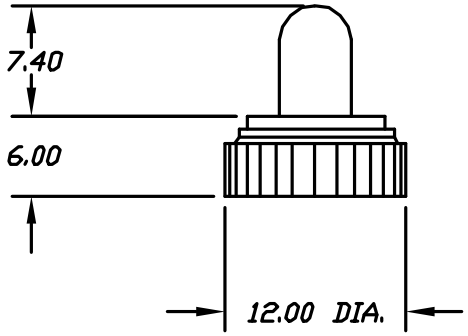

NOTES:

1. ALL DIMENSIONS IN MM

REV.	DESCRIPTION	DATE	CHKD
A	RELEASED FOR PRODUCTION		

THE INFORMATION CONTAINED IN THIS DOCUMENT IS PROPRIETARY TO E-SWITCH AND IS NOT TO BE COPIED OR TRANSFERRED

TOLERANCES		
	±0.4	±0.25
	0.0	0.00

E-SWITCH

TITLE: E1 RUBBER HOOD SEALING

SCALE	DATE	DR	DWG	REV
2:1	5/13/96	MM	T100100	A