Ordering number : ENA2329A

EFC6612R

Power MOSFET
20V, 5.1mΩ, 23A, Dual N-Channel

ON Semiconductor®

http://onsemi.com

Features

- 2.5V drive
- Protection diode in
- Halogen free compliance
- Common-drain type
- 2KV ESD HBM

Applications

- Lithium-ion battery charging and discharging switch

Specifications

Absolute Maximum Ratings at Ta = 25°C

Parameter	Symbol	Conditions	Value	Unit
Source to Source Voltage	V_{SSS}		20	V
Gate to Source Voltage	V_{GSS}		±12	V
Source Current (DC)	I_S		23	A
Source Current (Pulse)	I_{SP}	PW≤100μs, duty cycle≤1%	100	A
Total Dissipation	P_T	When mounted on ceramic substrate (5000mm^2×0.8mm)	2.5	W
Junction Temperature	T_j		150	°C
Storage Temperature	Tstg		–55 to +150	°C

Stresses exceeding those listed in the Maximum Ratings table may damage the device. If any of these limits are exceeded, device functionality should not be assumed, damage may occur and reliability may be affected.

Thermal Resistance Ratings

Parameter	Symbol	Value	Unit
Junction to Ambient When mounted on ceramic substrate (5000mm^2×0.8mm)	$R_{\theta JA}$	50	°C/W

Electrical Characteristics at Ta = 25°C

Parameter	Symbol	Conditions		Value			Unit
				min	typ	max	
Source to Source Breakdown Voltage	$V(BR)_{SSS}$	I_S=1mA, V_{GS}=0V	Test Circuit 1	20			V
Zero-Gate Voltage Source Current	I_{SSS}	V_{SS}=20V, V_{GS}=0V	Test Circuit 1			1	μA
Gate to Source Leakage Current	I_{GSS}	V_{GS}=±8V, V_{SS}=0V	Test Circuit 2			±1	μA
Gate Threshold Voltage	$V_{GS}(th)$	V_{SS}=10V, I_S=1mA	Test Circuit 3	0.5		1.3	V
Forward Transconductance	g_{FS}	V_{SS}=10V, I_S=3A	Test Circuit 4		4.7		S

Continued on next page.

ORDERING INFORMATION

See detailed ordering and shipping information on page 2 of this data sheet.

Continued from preceding page.

Parameter	Symbol	Conditions	Value			Unit
			min	typ	max	
Static Source to Source On-State Resistance	R_{SS}(on)1	I_S=4.5A, V_{GS}=4.5V Test Circuit 5	3.3	4.2	5.1	mΩ
	R_{SS}(on)2	I_S=4.5A, V_{GS}=4.0V Test Circuit 5	3.4	4.3	5.2	mΩ
	R_{SS}(on)3	I_S=4.5A, V_{GS}=3.8V Test Circuit 5	3.5	4.4	5.3	mΩ
	R_{SS}(on)4	I_S=4.5A, V_{GS}=3.1V Test Circuit 5	3.9	4.9	6.4	mΩ
	R_{SS}(on)5	I_S=4.5A, V_{GS}=2.5V Test Circuit 5	4.4	5.6	7.9	mΩ
Turn-ON Delay Time	t_d(on)	V_{SS}=10V, V_{GS}=4.5V, I_S=4.5A Test Circuit 6		30		ns
Rise Time	t_r			640		ns
Turn-OFF Delay Time	t_d(off)			11.8		μs
Fall Time	t_f			92		μs
Total Gate Charge	Qg	V_{SS}=10V, V_{GS}=4.5V, I_S=23A Test Circuit 7		27		nC
Forward Source to Source Voltage	$V_{F(S-S)}$	I_S=4.5A, V_{GS}=0V Test Circuit 8		0.76	1.2	V

Product parametric performance is indicated in the Electrical Characteristics for the listed test conditions, unless otherwise noted. Product performance may not be indicated by the Electrical Characteristics if operated under different conditions.

Ordering & Package Information

Device	Package	Shipping	note
EFC6612R-TF	EFCP	5,000 pcs. / reel	Pb-Free and Halogen Free

Packing Type: TF

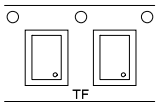

Marking



Electrical Connection

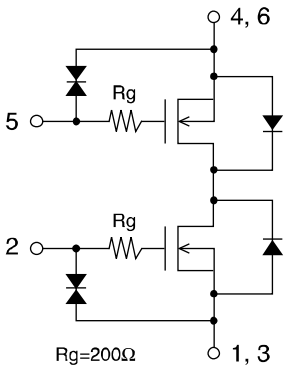

Test circuits are example of measuring FET1 side

Test Circuit 1
I_{SSS}

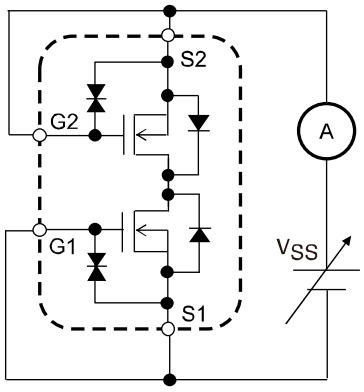

Test Circuit 2
I_{GSS}

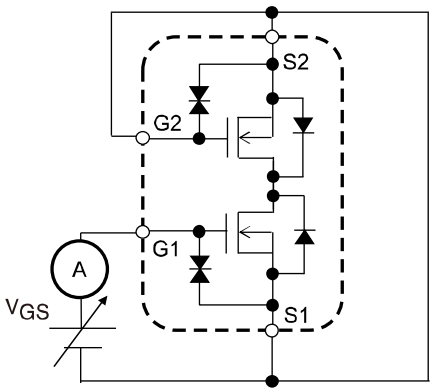

When FET1 is measured, Gate and Source of FET2 are short-circuited.

Test Circuit 3
$V_{GS(th)}$

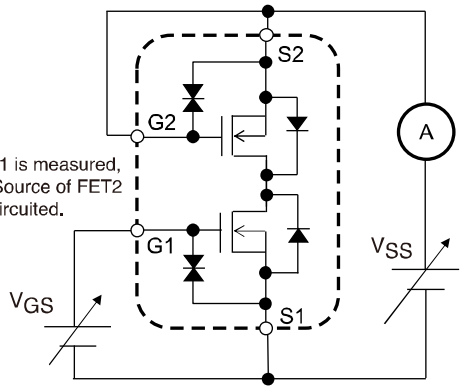

When FET1 is measured, Gate and Source of FET2 are short-circuited.

Test Circuit 4
g_{FS}

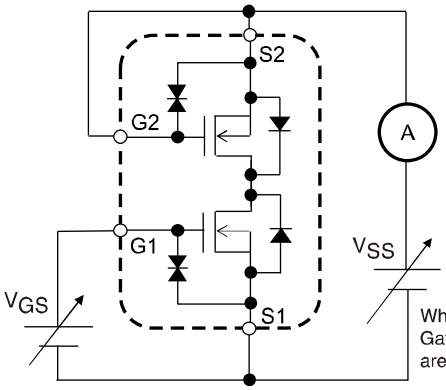

When FET1 is measured, Gate and Source of FET2 are short-circuited.

Test Circuit 5
$R_{SS(on)}$

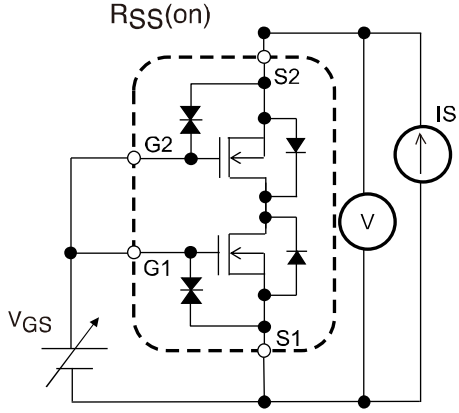

Test Circuit 6
$t_{d(on)}$, t_r, $t_{d(off)}$, t_f

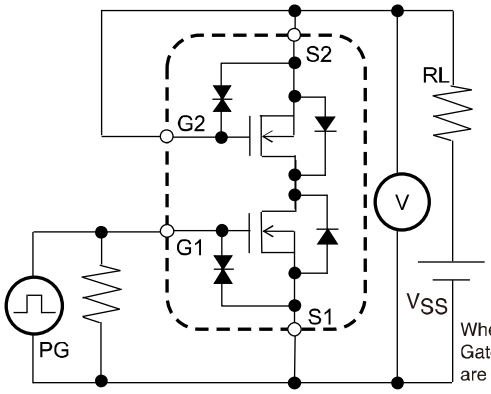

When FET1 is measured, Gate and Source of FET2 are short-circuited.

Test Circuit 7
Qg

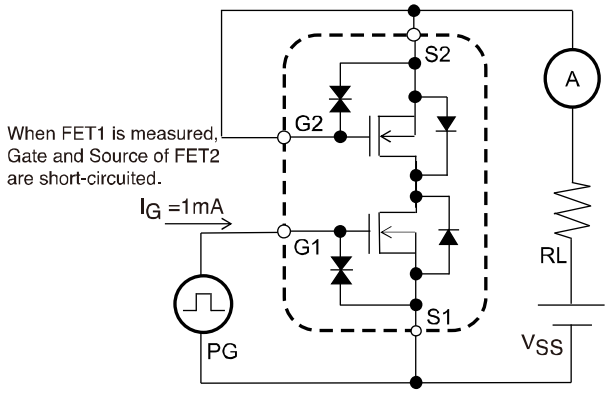

When FET1 is measured, Gate and Source of FET2 are short-circuited.

Test Circuit 8
$V_{F(S-S)}$

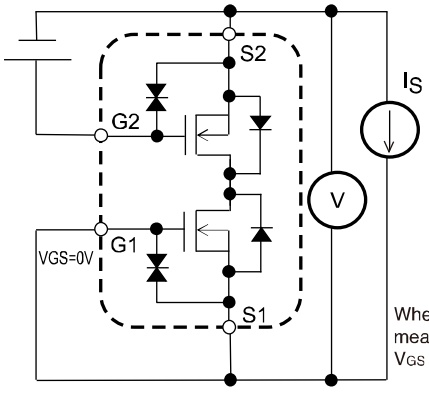

When FET1 is measured,+4.5V is added to V_{GS} of FET2.

When FET2 is measured, the position of FET1 and FET2 is switched.

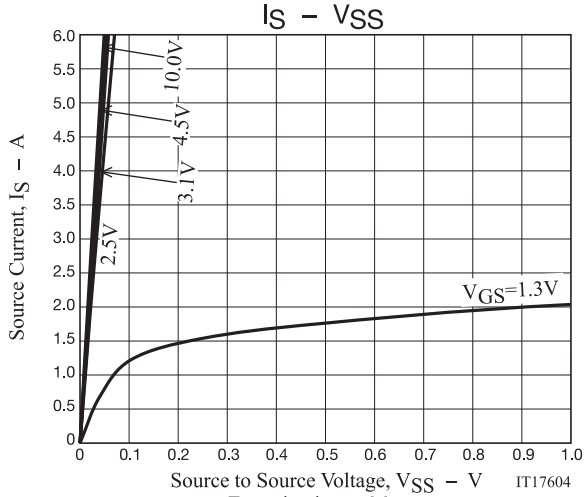
IS – VSS
Source Current, IS – A
Source to Source Voltage, VSS – V
10.0V
4.5V
3.1V
2.5V
VGS=1.3V
IT17604

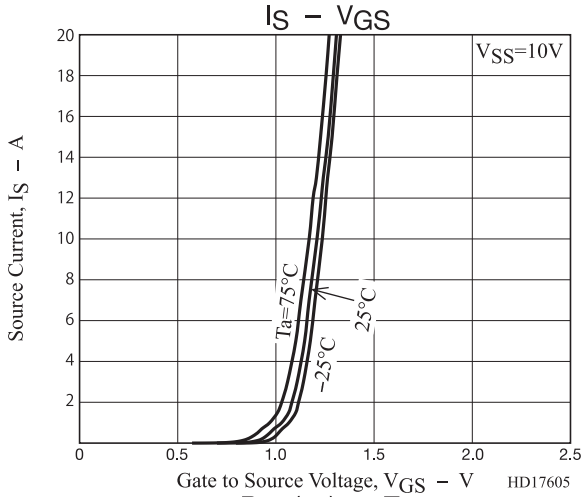
IS – VGS
Source Current, IS – A
Gate to Source Voltage, VGS – V
VSS=10V
Ta=75°C
25°C
–25°C
HD17605

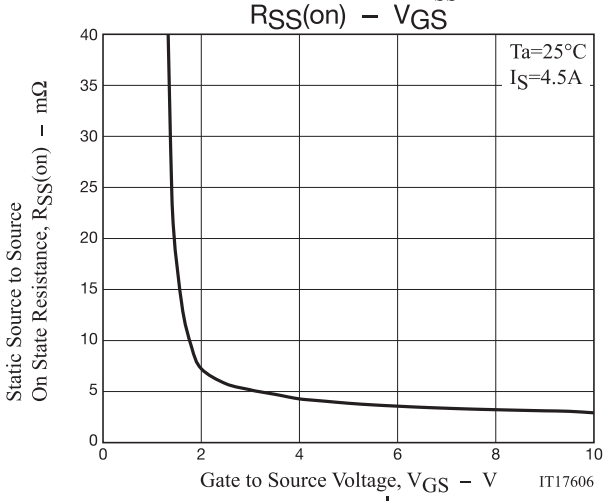
RSS(on) – VGS
Static Source to Source
On State Resistance, RSS(on) – mΩ
Gate to Source Voltage, VGS – V
Ta=25°C
IS=4.5A
IT17606

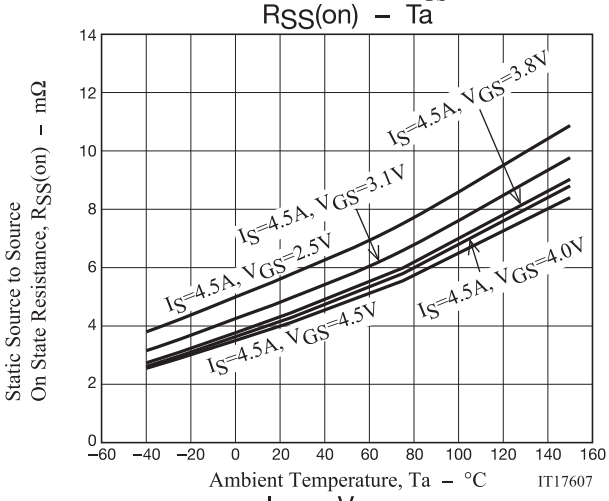
RSS(on) – Ta
Static Source to Source
On State Resistance, RSS(on) – mΩ
Ambient Temperature, Ta – °C
IS=4.5A, VGS=3.8V
IS=4.5A, VGS=3.1V
IS=4.5A, VGS=2.5V
IS=4.5A, VGS=4.0V
IS=4.5A, VGS=4.5V
IT17607

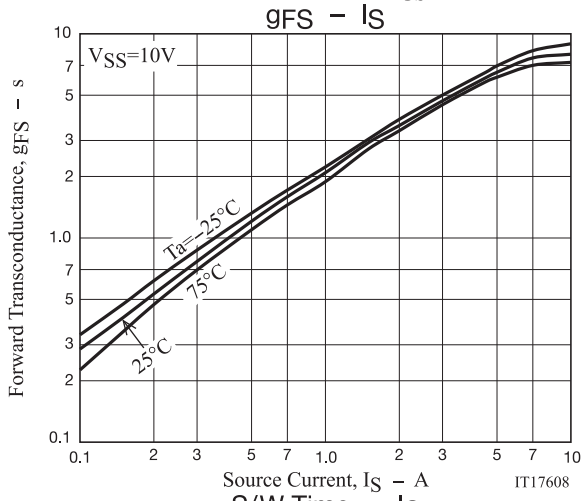
gFS – IS
Forward Transconductance, gFS – s
Source Current, IS – A
VSS=10V
Ta=–25°C
75°C
25°C
IT17608

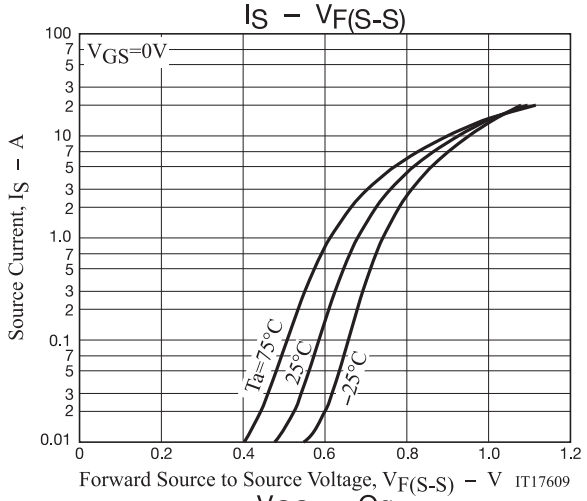
IS – VF(S-S)
Source Current, IS – A
Forward Source to Source Voltage, VF(S-S) – V
VGS=0V
Ta=75°C
25°C
–25°C
IT17609

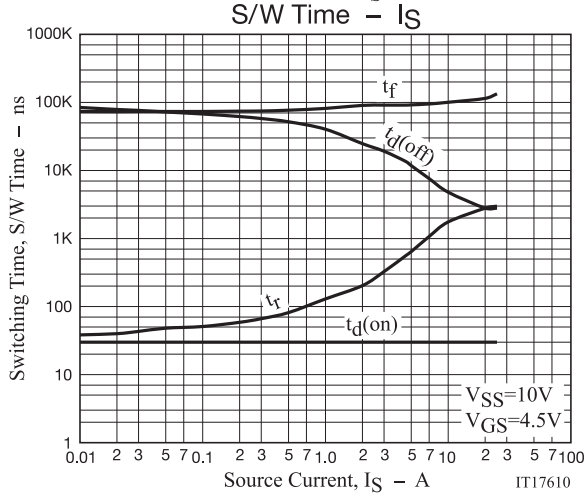
S/W Time – IS
Switching Time, S/W Time – ns
Source Current, IS – A
tf
td(off)
tr
td(on)
VSS=10V
VGS=4.5V
IT17610

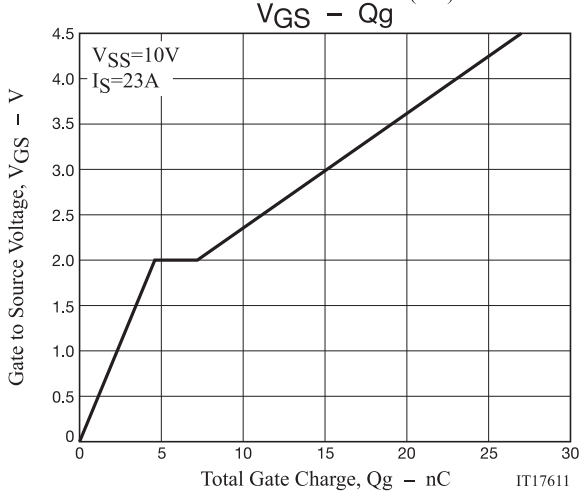
VGS – Qg
Gate to Source Voltage, VGS – V
Total Gate Charge, Qg – nC
VSS=10V
IS=23A
IT17611

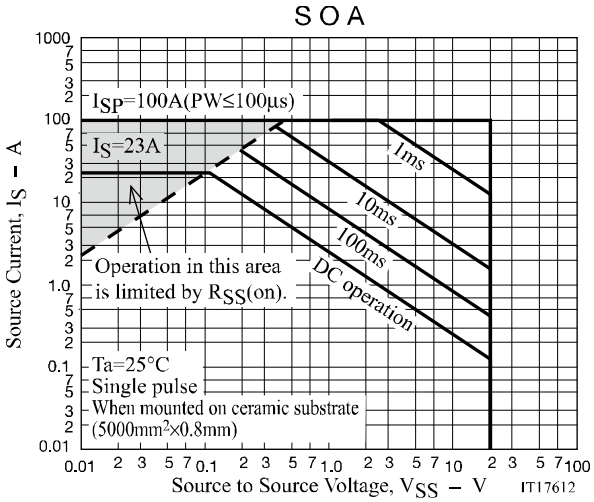
SOA
ISP=100A(PW≤100μs)
IS=23A
1ms
10ms
100ms
DC operation
Operation in this area
is limited by RSS(on).
Ta=25°C
Single pulse
When mounted on ceramic substrate
(5000mm²×0.8mm)
Source Current, IS – A
Source to Source Voltage, VSS – V
IT17612

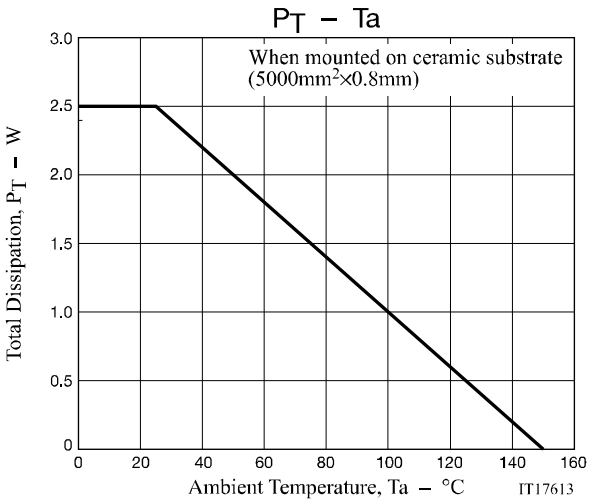
PT – Ta
When mounted on ceramic substrate
(5000mm²×0.8mm)
Total Dissipation, PT – W
Ambient Temperature, Ta – °C
IT17613

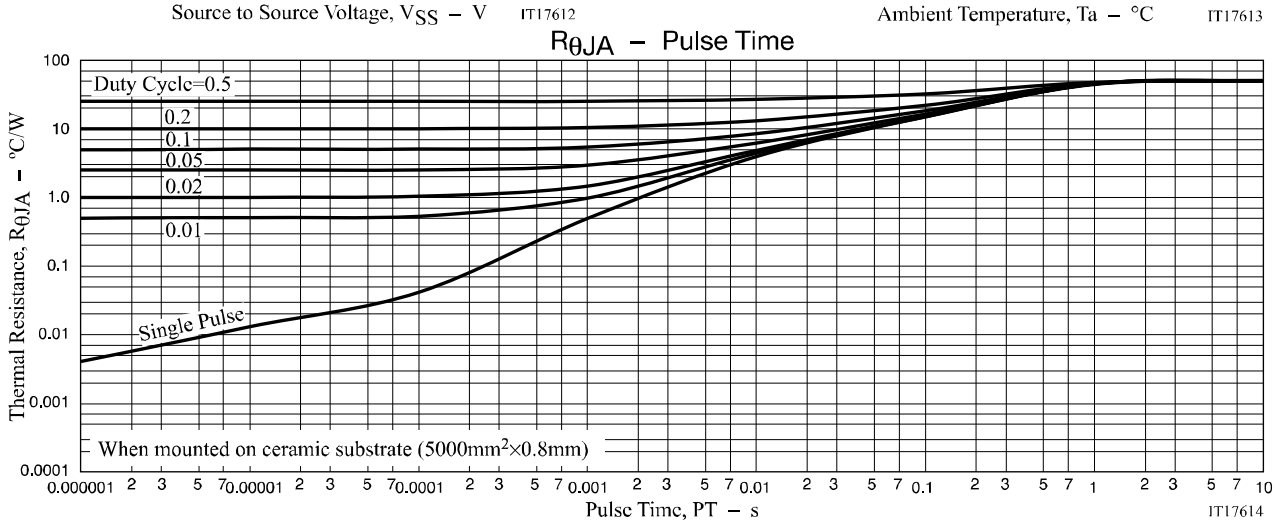
RθJA – Pulse Time
Duty Cycle=0.5
0.2
0.1
0.05
0.02
0.01
Single Pulse
When mounted on ceramic substrate (5000mm²×0.8mm)
Thermal Resistance, RθJA – °C/W
Pulse Time, PT – s
IT17614

Package Dimensions

EFC6612R-TF

CSP6, 1.77×3.54 / EFCP3517-6DGH-020

CASE 568AL
ISSUE O
unit : mm

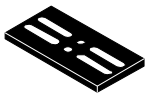

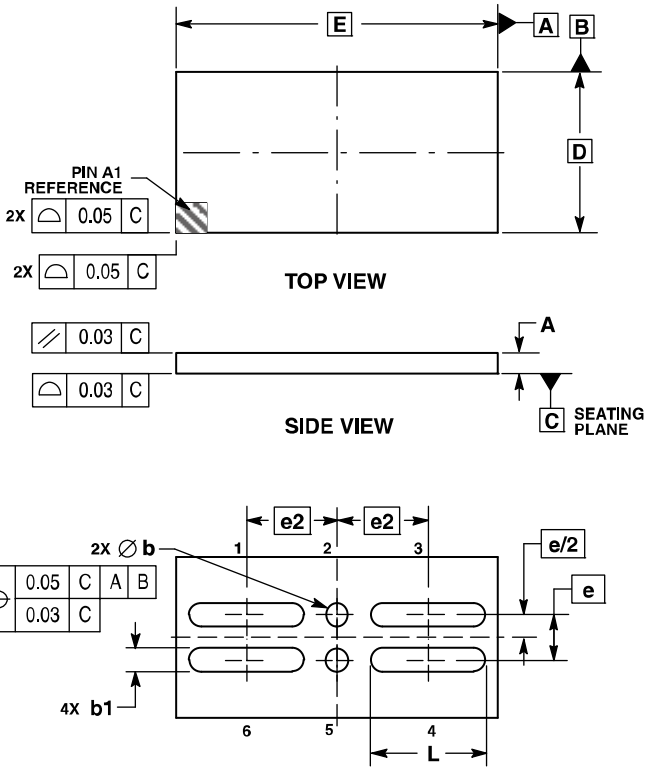

NOTES:
1. DIMENSIONING AND TOLERANCING PER ASME Y14.5M, 1994.
2. CONTROLLING DIMENSION: MILLIMETERS.

DIM	MILLIMETERS MIN	MAX
A	—	0.22
b	0.22	0.28
b1	0.22	0.28
D	1.77 BSC	
E	3.54 BSC	
e	0.50 BSC	
e2	1.00 BSC	
L	1.22	1.28

RECOMMENDED SOLDERING FOOTPRINT*

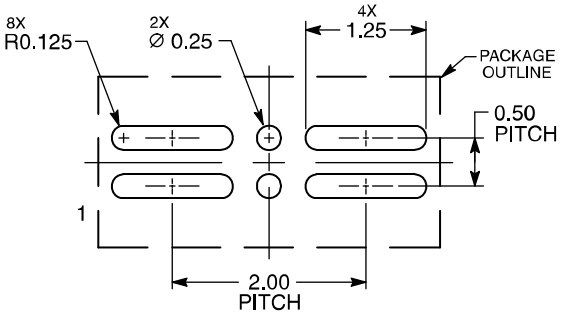

DIMENSIONS: MILLIMETERS

*For additional information on our Pb–Free strategy and soldering details, please download the ON Semiconductor Soldering and Mounting Techniques Reference Manual, SOLDERRM/D.

1: Source1
2: Gate1
3: Source1
4: Source2
5: Gate2
6: Source2

Note on usage : Since the EFC6612R is a MOSFET product, please avoid using this device in the vicinity of highly charged objects.

ON Semiconductor and the ON logo are registered trademarks of Semiconductor Components Industries, LLC (SCILLC) or its subsidiaries in the United States and/or other countries. SCILLC owns the rights to a number of patents, trademarks, copyrights, trade secrets, and other intellectual property. A listing of SCILLC's product/patent coverage may be accessed at www.onsemi.com/site/pdf/Patent-Marking.pdf. SCILLC reserves the right to make changes without further notice to any products herein. SCILLC makes no warranty, representation or guarantee regarding the suitability of its products for any particular purpose, nor does SCILLC assume any liability arising out of the application or use of any product or circuit, and specifically disclaims any and all liability, including without limitation special, consequential or incidental damages. "Typical" parameters which may be provided in SCILLC data sheets and/or specifications can and do vary in different applications and actual performance may vary over time. All operating parameters, including "Typicals" must be validated for each customer application by customer's technical experts. SCILLC does not convey any license under its patent rights nor the rights of others. SCILLC products are not designed, intended, or authorized for use as components in systems intended for surgical implant into the body, or other applications intended to support or sustain life, or for any other application in which the failure of the SCILLC product could create a situation where personal injury or death may occur. Should Buyer purchase or use SCILLC products for any such unintended or unauthorized application, Buyer shall indemnify and hold SCILLC and its officers, employees, subsidiaries, affiliates, and distributors harmless against all claims, costs, damages, and expenses, and reasonable attorney fees arising out of, directly or indirectly, any claim of personal injury or death associated with such unintended or unauthorized use, even if such claim alleges that SCILLC was negligent regarding the design or manufacture of the part. SCILLC is an Equal Opportunity/Affirmative Action Employer. This literature is subject to all applicable copyright laws and is not for resale in any manner.