発行整理番号
Issue NO. : T1LC-05005

発行日
Date of Issue : 2005年2月24日 February 24,2005

発行区分
Classification: ■ 新規 New □ 変更 Change □ 更新 Renewal

To Digi-Key

納入仕様書
PRODUCT SPECIFICATION FOR INFORMATION

製品名称
Product Description : High Frequency Filter

製品品番
Product Part Number : ELB2A005

松下品番
Matsushita Part Number : ELB2A005

適用(使用機種等)
Applications : Cordless phone

上記以外の適用に際しては,事前に弊社担当者までご連絡ください。
For other applications,contact our person signed below.

製造部署
Manufactured by : JAPAN

本仕様書の有効期間
Term of Validity : 発行日から from the date of issue まで有効とします。

お得意様ご使用欄 CUSTOMER USE ONLY
この書類を確かに受領しました。 This was certainly received by us.

松下電子部品株式会社
変成器ビジネスユニット
Matsushita Electronic Components Co.,Ltd.
Power Supply and Inductive Products Business Unit

〒571-8506 大阪府 門真市 大字門真1006番地
1006 Kadoma, Kadoma City, Osaka 571-8506, Japan

電話(代表) (06) 6908-3191
Tel (06) 6908-3191 (Representative)

発行部署名 Prepared by
コイル技術グループ
Inductive Engineering Group
Tel (06)6908-1215
Fax (06)6908-7307

責任者 Approved	検印 Checked	担当者 Designed

1. この製品の使用材料は、「化学物質の審査及び製造等の規制に関する法律」に基き、すべて既存化学物質として記載されている材料です。

All the materials used in this product are registered material under the Law Concerning the Examination and Regulation of Manufacture, etc. of Chemical Substances.

2. 本製品は、モントリオール議定書で規制されているオゾン層破壊物質(ODC)を製造工程及び購入部品・材料で一切使用していません。

This product has not been manufactured with any ozone depleting chemical controlled under the Montreal Protocol.

3. この製品に使用している全ての材料には、臭素系特定難燃物質「PBBOs、PBBs」を含有しておりません。

All the materials used in this product contain no brominated materials of PBBOs or PBBs as the flame-retardant.

4. 納入仕様書の「有効期間」について
有効期間は、特に、申し出のない限り(お客様の要望を含み)自動更新とします。
その際、連絡書・仕様書は、発行致しません。

"The Term of Validity" of Product Specifications for Information
Unless otherwise requested (including from customer), the term of validity shall be renewed automatically.
Then , informations and specifications shall be not issued.

SPECIFICATIONS (Record of Revision)

Customer's Code	ELB2A005	Company name	Matsushita Electronic Components Co.,Ltd.
Matsushita Code	ELB2A005	Publisher	Matsushita Electronic Components Co.,Ltd.

No.	Date	Details of change	Operation	Checked
1	Feb.25.2005	New	After Receiving Spec.	S.Morimoto
2				
3				
4				
5				
6				
7				
8				
9				
10				

Classification	SPECIFICATIONS	Code No. (R 0) T1LC-05005
Name	High-Frequency Bandpass Filter	1 - 1

1.SCOPE

This specification covers the High-Frequency Bandpass Filter to be delivered to **Digi-Key**

2.PARTNUMBER

The part number of the products in this specification shall be

ELB2A005

3.INDIVIDUAL

Code No. 151- ELB2A005 (R 0)

(1)APPEARANCE&DIMENSIONS
As specified in the appearance & dimensions.

(2)MOUNTING DETAIL AND METAL MASK DETAIL
As specified in the mounting detail and metal mask detail.

(3)ELECTRICAL CHARACTERISTICS
As specified in the electrical characteristics.

(4)PERFORMANCE CHARACTERISTICS
As specified in the freq. response & group delay.

4.COMMON

Code No. 151- LC2A005 (R 0)

(1)RELIABILITY CHARACTERISTICS
As specified in the reliability characteristics.

(2)ATTENTION
As specified in the attention.

(3)TEST METHOD
As specified in the test method.

(4)CONSRRUCTION
As specified in the construction.

(5)PACKAGE
As specified in the package.

5.REMARKS

(1)PRODUCING DISTRICT
Module BU Module DC Matsushita Electronic Components Co.,Ltd.

992-1 Aiba Ohno-Cho Ibi-Gun Gifu PREF,501-0598,Japan.

No.	Date	Revision	Checked	Date	Feb.25.2005	
				Approval	Checked	Design
				S.Morimoto		M.Shiba

Classification	SPECIFICATIONS	Code No. (R 0) 151- ELB2A005
Name	High-Frequency Bandpass Filter	1 - 2

Customer's Code	Matsushita Code	Tentative Code
ELB2A005	ELB2A005	SLBBPF1027

APPEARANCE&DIMENSIONS(upper side)

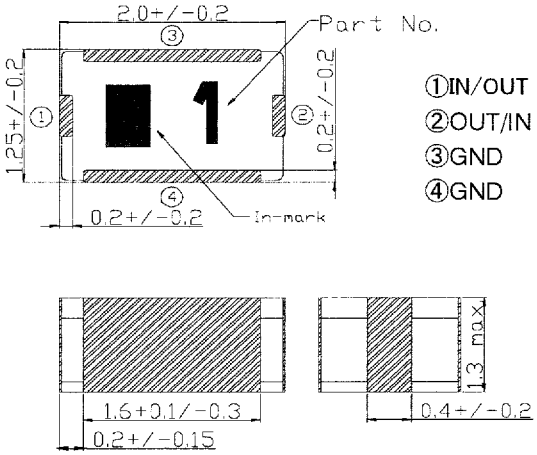

MOUNTING DETAIL

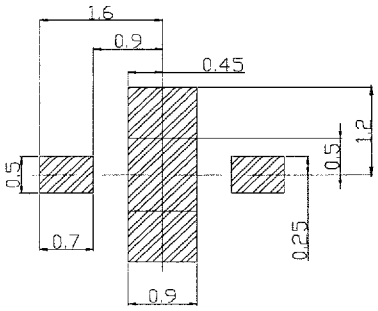

METAL MASK DETAIL

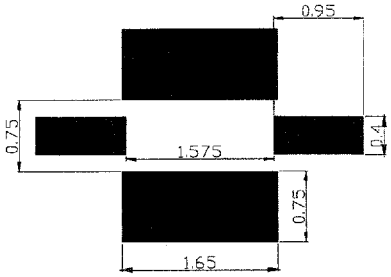

Upper side is marking.

ELECTRICAL CHARACTERISTICS

Characteristic Impedance	IN:50. / OUT:50.		
Power ploof	0.5W max.		
VSWR	2.0 max.		
Ripple	1.0dB max.		
Insertion Loss	2.0dB max.	[at 5.725GHz~5.85GHz]	Test method (F-1)
Relative Attenuation	28.0dB min.	[at 3.275GHz~3.400GHz]	
	18.0dB min.	[at 6.8GHz]	
	25.0dB min.	[at 11.45GHz~11.70GHz]	
	15.0dB min.	[at 17.175GHz~17.55GHz]	

Electrical Characteristics is subject to change by mounting of component.(dimention and position (ground pattern and land pattern) etc). Please make sure of using printed board of yours.
Electrical Characteristics is measured by printed board endorsed by ours.(Fig. 1)
Whenever a doubt about this product,please make sure of using our printed board.

ENVIRONMENT CHARACTERISTICS and RELIABILITY

This table is Specifications of electrical characteristics after environment and mechanical test regulated by "Specifications(Common) "of High-Frequency Bandpass Filter.

Item		Table 1
Insertion Loss	[at 5.725GHz~5.85GHz]	3.0dB max.
Insertion Loss		
Relative Attenuation	[at 3.275GHz~3.400GHz]	26.0dB min.
Relative Attenuation	[at 6.8GHz]	16.0dB min.
Relative Attenuation	[at 11.45GHz~11.70GHz]	23.0dB min.
Relative Attenuation	[at 17.175GHz~17.55GHz]	13.0dB min.

Marking

This item's marking is "In-Mark" and "Customer's Code".

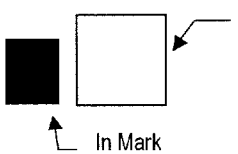

Customer's Code (05)

Classification	SPECIFICATIONS	Code No. (R 0) 151- ELB2A005
Name	PERFORMANCE CHARACTERISTICS	2 - 2

Customer's Code	Matsushita Code	Tentative Code
ELB2A005	ELB2A005	SLBBPF1027

Frequency Characteristics.

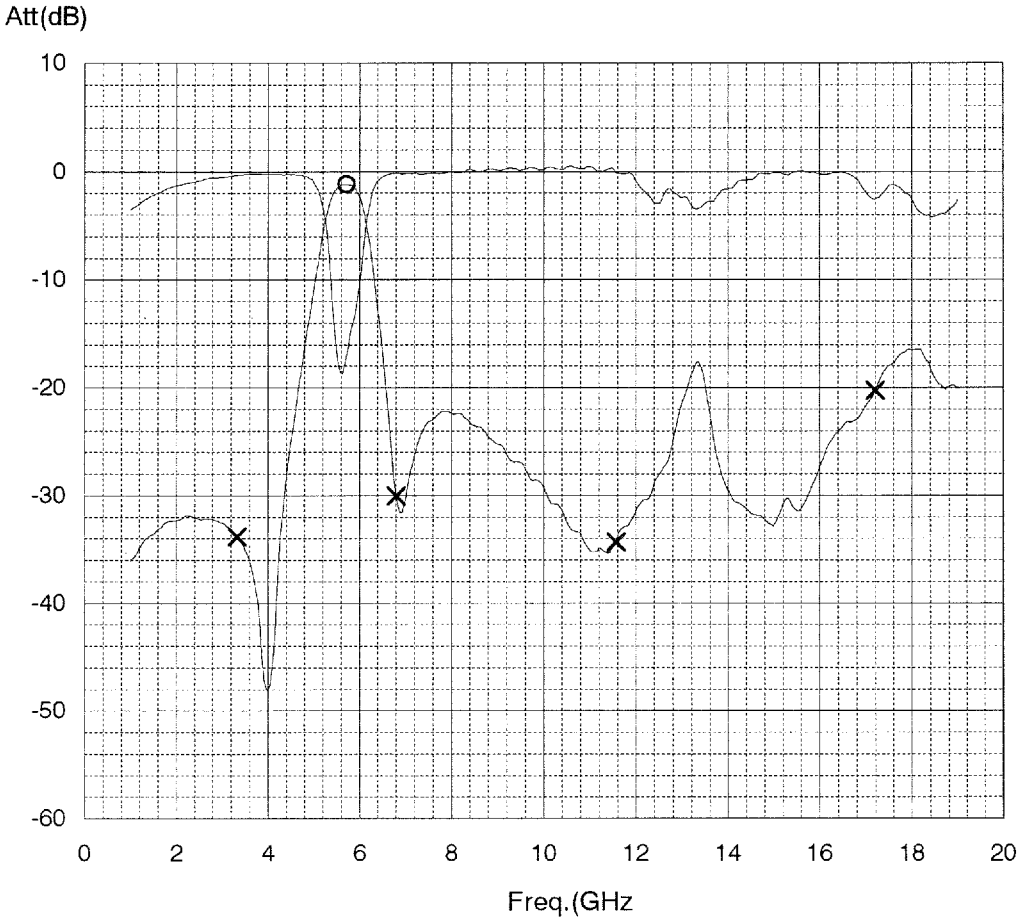

Classification	SPECIFICATION(COMMON)	Code No. (R0) 151-LC2A005
Subject	High-Frequency Bandpass Filter Reliability Characteristics	1 - 8

	Items	Specification	Test Method/Condition
Environmental Characteristics	Moisture Resistance	The electrical characteristic shall be as shown in Table of individual specification	Filters shall be subjected to 90%～95%RH at 60℃±2℃ for 500h±8h. Measurements shall be made after 48h stabilization at room temperature.
	Thermal Resistance		Filters shall be subjected to 85℃±2℃ for 500h±8h. Measurements shall be made after 48h stabilization at room temperature.
	Cold Resistance		Filters shall be subjected to -40℃±2℃ for 500h±8h. Measurements shall be made after 48h stabilization at room temperature.
	Thermal Impact		Filters shall be subjected to repeat 100 times to the following temperature cycle. 1.-40℃±2℃ 30 min , 2. 85℃±2℃ 30 min Measurements shall be made after 48 hour stabilization at room temperature.
	Thermal Characteristic		Checked at any temperature from -20℃±3℃ to 85℃±3℃. (standard at 20℃)
	Moisture Life		Filters shall be subjected to 90%～95%RH at 60℃±2℃ for 500h±2h with DC 15V loaded between the terminals. Measurements shall be made after 48h stabilization at room conditions.
	Thermal Life		Filters shall be subjected to 85℃±2℃ for 500h±2h with DC 15V loaded between the terminals. Measurements shall be made after 48h stabilization at room conditions.
Mechanical	Dipping Solder Heart Resistance	The electrical characteristic shall be as shown in Table of individual specification Appearance and structure shall be no abnormality.	Filters shall be subjected to dipping in solder at 270℃±5℃ for 5s ±0.5s up to 1.0mm～1.5mm from attachment surface. Measurements shall be made after dipping in solder for 10s±0.5s.
	Reflow Solder Heart Resistance		150±10℃ preheat cycle for 2 minutes,and through reflow at 230℃±5℃ for 10s±0.5s ,and more than 2minutes stabilization, repeat 2 times.
	Impact Resistance		Fall on a hard wooden board from a height of 1.0m 10 times.
	Vibration Resistance		Vibrating at the frequency varying uniformly between the approximate limits of 10Hz and 55 Hz, an amplitude of 1.5mm for 2h in each of 3 mutually perpendicular directions.
	Bending Strength		Apply pressure to test Jig (Fig.2) mounted component until 2mm 5 times.
	Solderability	The terminals shall be at least 90% covered with solder.	After dipping in solder at 230℃±5℃ for 2s±0.5s.
Operating temp. range		-20℃～85℃	
Failure rate		1.0FIT max.	

Classification	SPECIFICATION(COMMON)	Code No. (R0) 151-LC2A005
Subject	High-Frequency Bandpass Filter Attention	2 - 8

Items	Specified Conditions for Use
Reflow profile	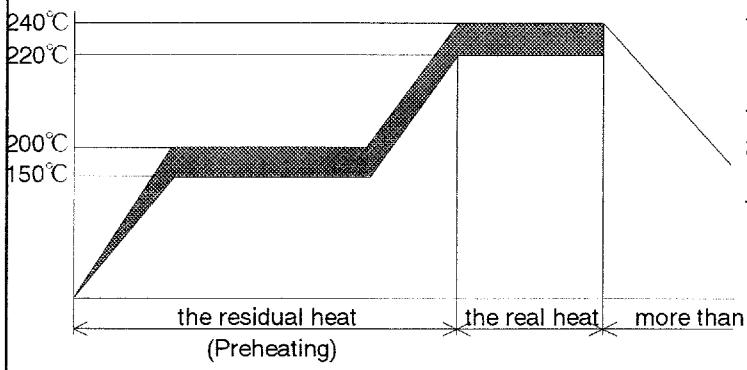 Reflow soldering with soldering iron should not be conducted 2 times. When you use other profiles than our recommendation illustrated below, please consult us in advice.
Washing of PC board	When the soldered PC board is washed by Fleon or others,you are requested to contact engineering department as for washer and washing conditions in advance.
Storage	Care shall be taken to temperature,humidity,gas and magnetic field. Temp. : -20℃～85℃ Humidity. : 85% max.
Mounting	Placement force should not exceed 4.9 N (0.5kgf), because electric and magnetic characteristics change by applying force.
Repair soldering	Temperature : 270℃ max. , Period time : 3s max.

Classification	SPECIFICATION(COMMON)	Code No. (R0) 151-LC2A005
Subject	High-Frequency Bandpass Filter Test Method	3 - 8

1.Test Circuit

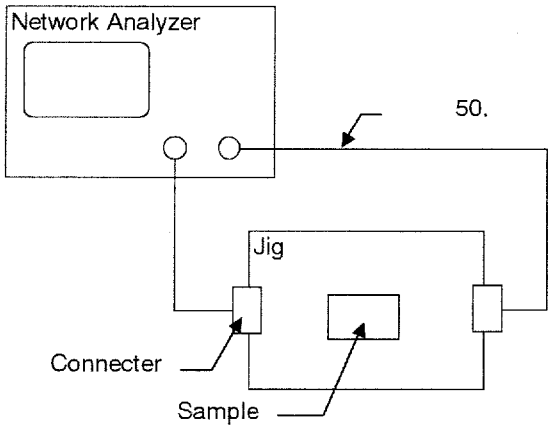

Note 1; Test Jig is recorded by Fig.1.

2.Test Method of Insertion Loss Frequency Characteristic (F-1)

Using the test circuit as shown Test circuit,calibrate 0 dB without Sample being tested at shorting "IN-OUT",then observe the levels at specified frequency by connecting Sample.
Insertion loss and Attenuation are determined by read-out level (A1)[dB] at the base frequency.
Insertion loss and attenuation level are shown as following.

・Insertion loss = (A1) [dB]

・Attenuation = (A1) [dB]

3.Measurement Equipment

Network Analyzer ; HP 8720 or Equivalent

Classification	SPECIFICATION(COMMON)	Code No. (R0) 151-LC2A005
Subject	High-Frequency Bandpass Filter Construction	4 - 8

Structure

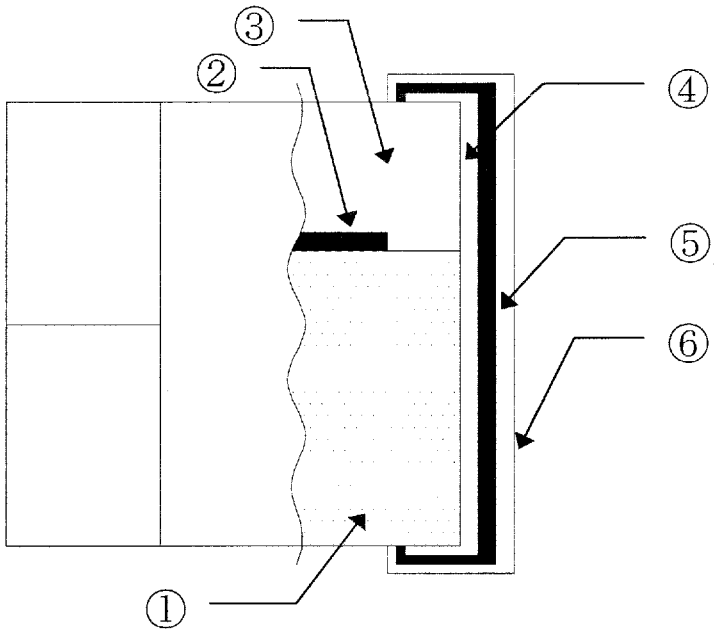

Material List

No.	Code	Material
1	Insulation materials A	Ceramic
2	Internal pattern	Ag
3	Insulation materials B	Glass
4	Terminal electrode	Ag
5		Ni
6		Sn

Classification	SPECIFICATION(COMMON)	Code No. (R0) 151-LC2A005
Subject	High-Frequency Bandpass Filter Packaging (Taping)	5 - 8

1.Carrier Tape

(1) Measure Unit mm

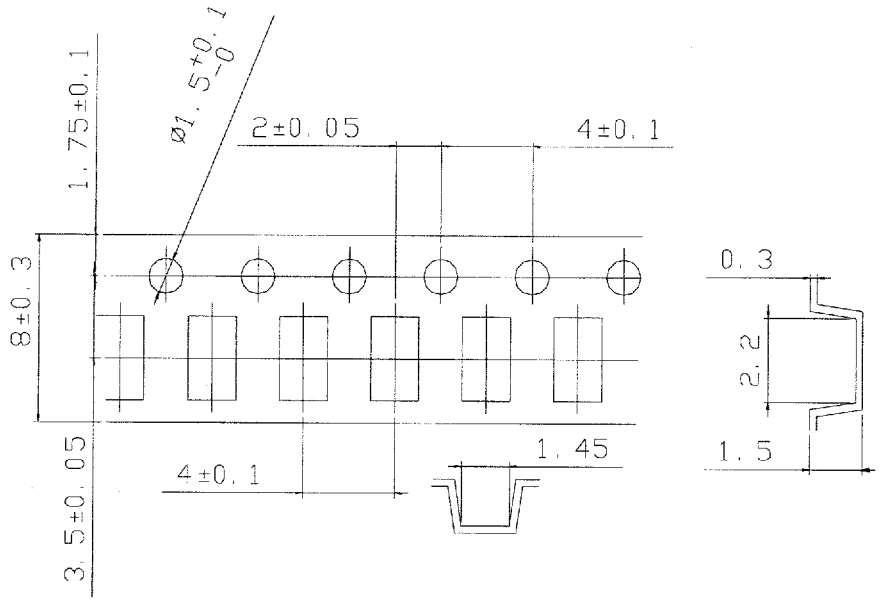

(2) Carrier Tape Peel Strength

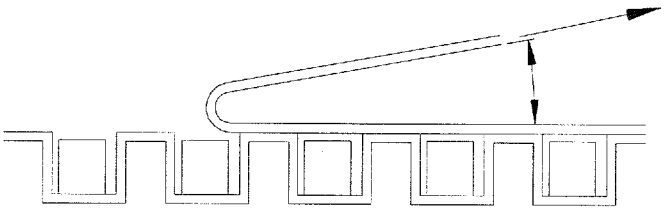

Direction of peel

- Peel speed : 300mm/min
- Peel accuracy : 10°
- Peel strength : 0.098N～0.686N

2.Reel Dimensions

(1) Marking ; Customer's Part No., quantity, Lot No. and our Part No.shall be marked on the reel.

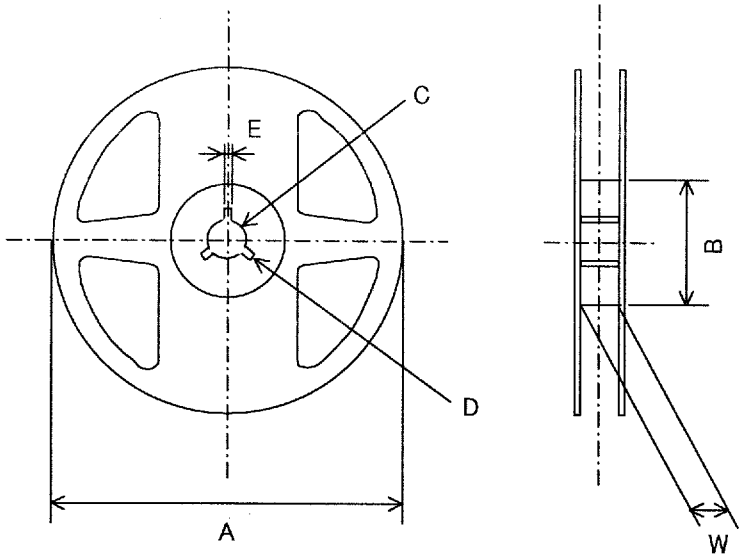

Code	Dimention
A	. 178±2.0
B	. 60±0.5
C	13.0±0.5
D	21.0±0.8
E	2.0±0.5
W	9.0±0.3

Classification	SPECIFICATION(COMMON)	Code No. (R0) 151-LC2A005
Subject	High-Frequency Bandpass Filter Packaging (Taping)	6 - 8

3.Packaging

Carrier tape (8mm width, 2mm pitch) and 178mm diameter reel shall be employed as per JIS C 0806.

(1)Quantity per Reel

3,000 pcs. There shall not be more empty pockets than two and those pockets shall not be consecutive.

(2)Packaging

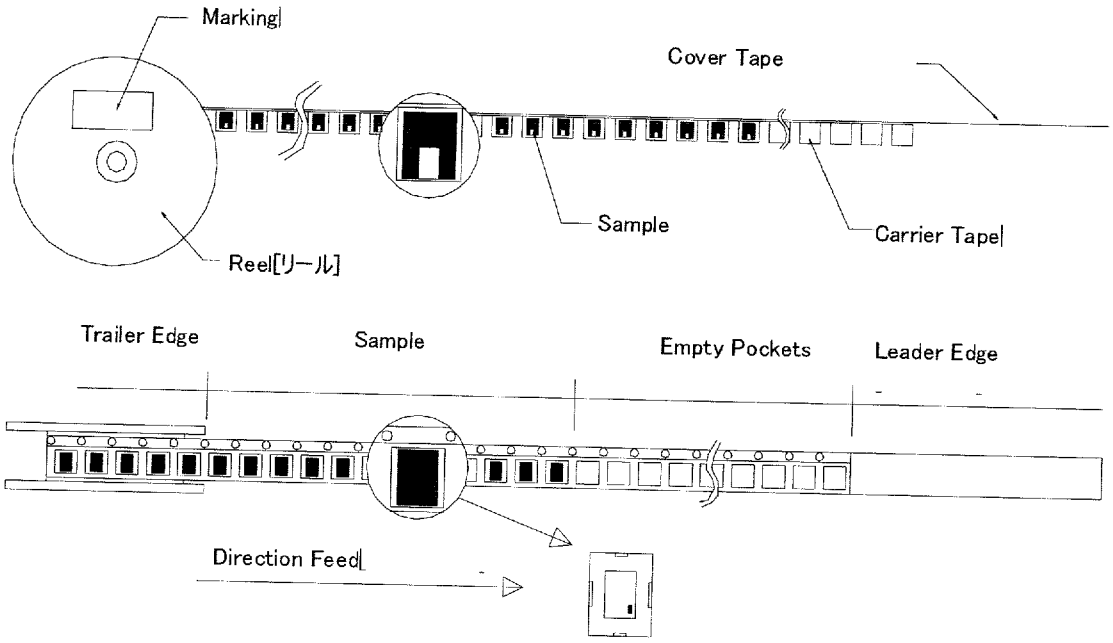

(2)-1. Trailer Edge,Empty Pockets and Leader Edge

As shown above, there shall be a leading edge consisting of 25 empty pockets as well as cover tape and a trailing edge consisting of 10 or more empty pockets.

(2)-2. Inserting Method

Both electrodes shall be vertical to the longitude of the pockets.

(2)-3. Take-up Method

Samples shall be oriented as specified on the above illustration.

(2)-4. Marking

Customer's P/N, MATSUSHITA'S P/N, quantity and manufacture's name shall be marked on the reel.

Classification	SPECIFICATION(COMMON)	Code No. (R0) 151-LC2A005
Subject	High-Frequency Bandpass Filter Packaging(Bar Code Label for the reel)	7 - 8

Part.No.

High Frequency Bandpass Filter ELB2A series

Bar-Code Label Spec.

Item	Spec.
Code	3 of 9
Code Density	15.63 to 11.72 cpi
Width of Narrow Bar	0.125 mm min.
Bar Ratio of Narrow:Wide	1 : 2 (Narrow : Wide)
Bar Code Height	4 mm min.
Margins (Quiet Zones)/Left&Right Margins	3.81 mm min.
Label Size	EIAJ C-3A (47×64×79mm)



	Item	Spec.
[1]	Customer's Part Number	Human Readable
[2]	Matsushita's Part Number & Quantity	Bar Code & Human Readable
[3]	Serial (Lot) Number & Vender Code	Bar Code & Human Readable
[4]	Matsushita's Part Number	Human Readable
[5]	Quantity	Human Readable
[6]	Serial Number	Human Readable
[7]	Matsushita's Part Number	Bar-Code
[8]	Lot Number	Human Readable

Contents About Serial Number

(ex.) L 0 3 1 0 6 0
[1] [2] [3] [4] [5]

[1] (1 column) : "R" or "Z" or "L" (Fixation)
[2] (2 column) : shipment year (One column of end of the Christian era)
(ex.) 2002 → 02 , 2003 → 03
[3] (1 column) : shipment month
[ex.] Jan. to Sep. > Number ("1" to "9") , Oct. > "O" , Nov. > "N" , Dec. > "D"
[4] (2 column) :shipment day
[ex.] 10 > Number ("01"to"09") , 10 < Number ("11" to "31")
[5] (1 column) : mixed other Lot No.
[ex.] 0 → only 1 lot. , 1 →mixed other lot.

Contents About Lot Number

(ex.) G 3 1 1 1
[1] [2] [3] [4]

[1] (1 column) : Producing District [ex.] G → Made in Gifu
[2] (1 column) : shipment year (One column of end of the Christian era)
[3] (1 column) : shipment month
[4] (2 column) :management number for inside production

Classification	SPECIFICATION(COMMON)	Code No. (R0) 151-LC2A005
Subject	High-Frequency Bandpass Filter Figure	8 - 8

Fig.1 Measuring Jig

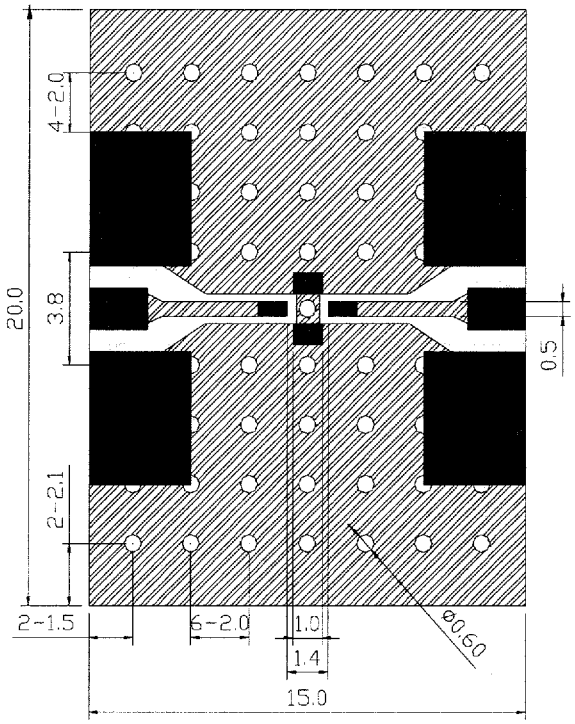

:Land

:Solder resist

:No pattern solder resist

O :Through hole (. 0.6)

Mulilayer printed board(4-layer) : glassfabric base,epoxy resin (1.0t,Copper leaf 18um)

Fig.2 Bending strength

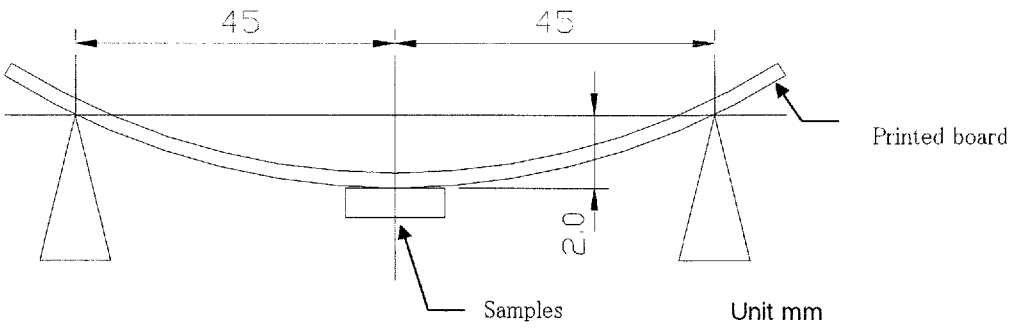

Single sided printed board : glassfabric base,epoxy resin (0.8t,Copper leaf 35um)