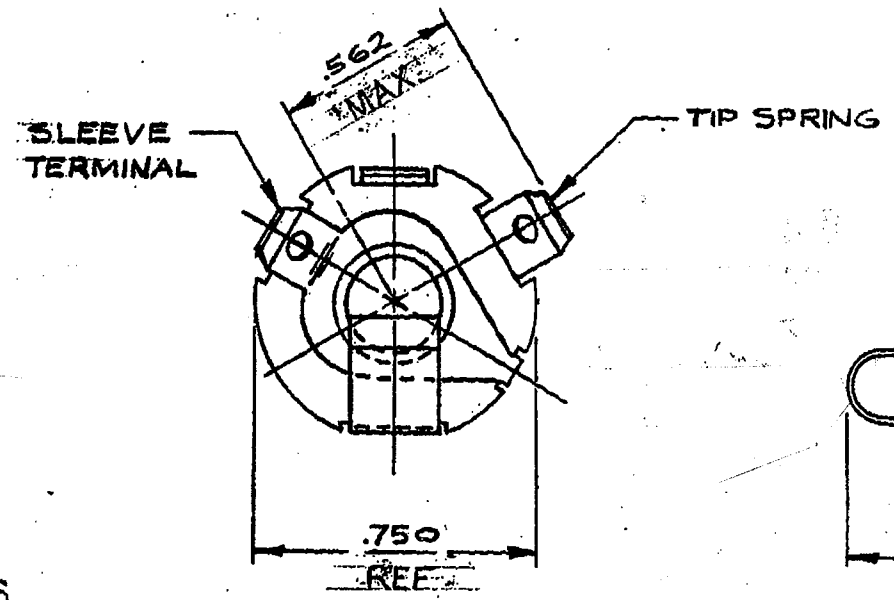

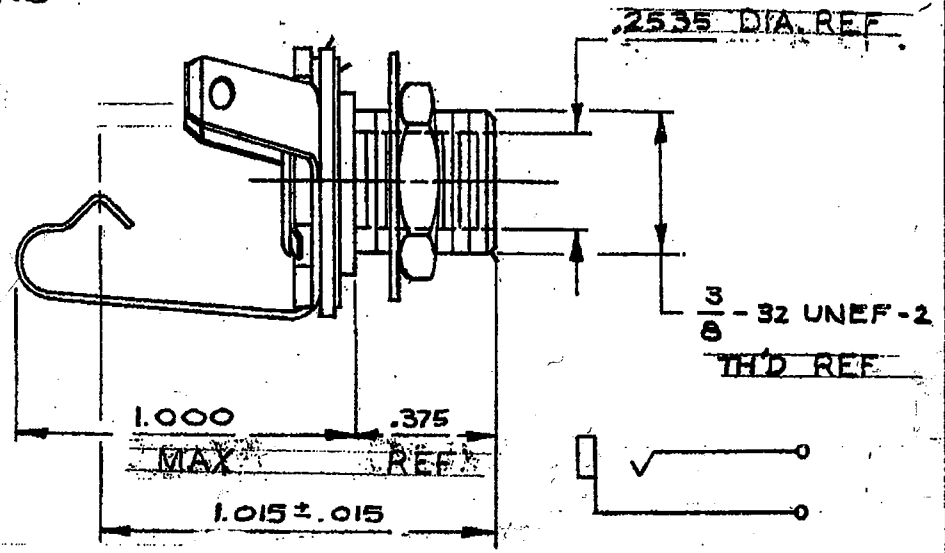

SCHEMATIC

NOTES

1. TERMINALS ARE DESIGNED TO MATE WITH AMP "205" SERIES FASTON RECEPTACLES.
2. MOUNTING HARDWARE SHIPPED UNASSEMBLED

CUSTOMER DRAWING

INCH [MM] THIRD ANGLE PROJECTION

☆ STAR SYMBOL DENOTES CRITICAL DIMENSION, SEE S/C ENGINEERING STANDARD ES-0001.

SIZE	WIDTH	MULT.	LBS. PER M	TEMPER

THIS DRAWING DESCRIBES A DESIGN CONSIDERED PROPRIETARY IN NATURE, DEVELOPED AND MANUFACTURED BY SWITCHCRAFT, INC., AND IS RELEASED ON A CONFIDENTIAL BASIS FOR IDENTIFICATION PURPOSE ONLY.

ISS	SYM	REVISION: RELEASED TO PRODUCTION	BY	DATE
–				
B		ECO # 19601	KB	5-19-95
C		ECO # 20627	TAO	2-22-96

UNLESS OTHERWISE SPECIFIED:

1. DECIMAL DIMENSIONS ± .005 [0.13]
2. FRACTIONAL DIMENSIONS ± 1/64
3. ANGLES ± 1/2° [0.40]
4. ALL DIA'S CONCENTRIC WITHIN .005 T.I.R.
5. ALL DIMENSIONS IN INCHES [0.13]
6. FOR THREADS USE UNIFIED PLUG AND RING GAGES ONLY.
7. REMOVE ALL BURRS
8. PART TO BE FABRICATED AS SPECIFIED. MAKE NO DIMENSIONAL ALLOWANCES FOR APPLIED FINISHES, I.E. PLATING, PAINTING, ETC
9. ~~HOLES ON SAME CENTERLINE MUST BE~~ ALIGNED WITHIN ± .002 [0.05]

DO NOT SCALE DRAWING

DRAWN BY DRS	DATE 30 AUG 78	FINISH	
CHECKED BY R.P.	DATE 8-31-78	PER FINISH SPEC. NO.	
APPROVED BY CJK	DATE 8-31-78	MATERIAL	
SCALE 2=1		PER MAT. SPEC. NO.	
FIRST USED ON		SWITCHCRAFT	

NAME	PART NO.	ISSUE
2 CONDUCTOR OPEN CIRCUIT JAX	FAL11	C
	SHEET 1 OF 1	

PAXTON

ROUTING (105) (146) (101) (112)