MOSFET BASED DC SOLID-STATE RELAY

SOM020100

- Latest MOSFET technology generation.
- Ultra low on-state resistance.
- Low output leakage current.
- Low control current consumption.
- Built-in overvoltage protection
- Reverse protected triggered control input to avoid linear control risks
- No radiated or conducted disturbances
- Touch protected housing IP20

Control voltage range	3.5-32VDC
Max. permanent output voltage	60VDC
Max. load current with heatsink	20ADC

Load voltage range	Load current range	Control input voltage range	In & case / Out Insulation	Connexions	Dimensions (WxHxD)	Weight
5-60VDC	Up to 20A (with heatsink)	3.5-32VDC	2.5kV	Screw terminals	45 x 58.5 x 30	80g

Fig. 1 HIGH SIDE WIRING DIAGRAM (Load connected to "-")

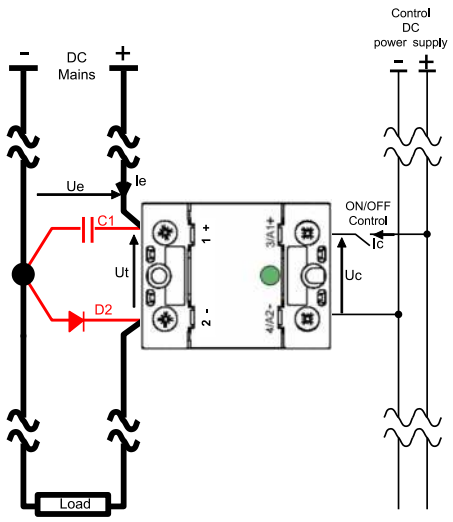

See Instruction sheet to select the right protective components

The red paths (C1/D2) must be as short as possible !

Fig. 2 LOW SIDE WIRING DIAGRAM (Load connected to "+")

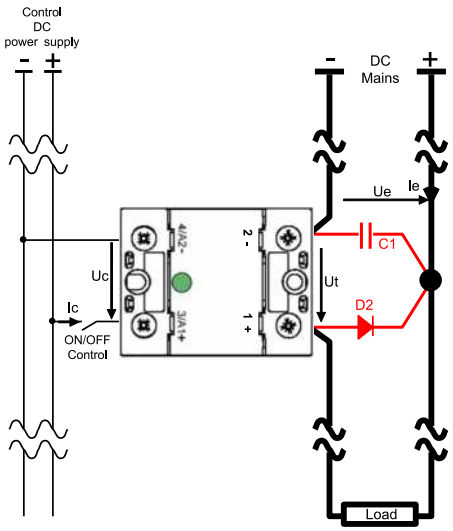

See Instruction sheet to select the right protective components

The red paths (C1/D2) must be as short as possible !

Fig. 3 INTERNAL DIAGRAM

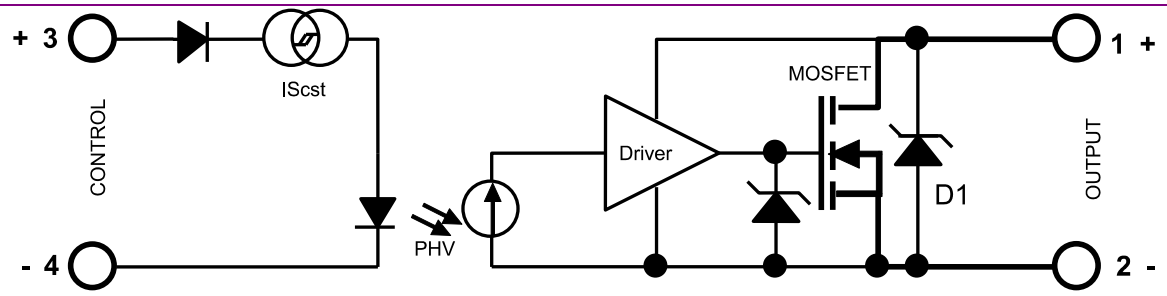

Proud to serve you

CONTROL INPUT CHARACTERISTICS

INPUT CIRCUIT

CHARACTERISTIC	LABEL	VALUE	INFO.
Nom. Control voltage	Ucnom	12-24VDC	
Min. Control current	Icmin	35mADC	-100µA/°C
Control voltage range	Uc	3.5 – 32VDC	typical ON=3.3V
Control current consumption	Ic	32 – 35mADC (for control voltage range)	See fig. 5
Releasing control voltage	Ucoffmax	1VDC	typical OFF= 2.6V
Max. reverse control voltage	-Ucmax	32VDC	-Icmax<100µA
Input impedance	Rin	Current limitation	See fig. 5

POWER OUTPUT CHARACTERISTICS

POWER CIRCUIT

CHARACTERISTIC	LABEL	VALUE		INFO.
Nominal voltage	Uenom	48VDC		
Voltage range	Ut / Ue	5-60VDC		
Non-repetitive peak voltage	Utp	100V		
Overvoltage protection	D1	Transient voltage suppressor 56V (1500W/1ms)		
Max reverse voltage drop (internal diode at OFF state)	-Ut	1.3V		@Ie=50A @Uc=0
Maximum nominal currents	Ie max	Resistive	Motor	See fig. 7 (limits)
		20A	Please contact us	
Non-repetitive peak overload current	Id max	200A		See fig. 8
Min. load current	Iemin	5mA		
Max. leakage current	Ielk max	3mA		@Utmax @Tjmax
Max. on-state resistance	RDSon	56mΩ		@Iemax @Tjmax
Typ. output capacitance	Cout	0.3nF		
Junction/case thermal resistance per power element	Rthjc	1.4K/W		
Built-in heatsink thermal resistance vertically mounted	Rthra	10K/W		@ΔTra=75°C
Heatsink thermal time constant	Tthra	10 minutes		@ΔTra=55°C
Control inputs/power outputs insulation voltage	Uimp	2.5kV		
Inputs/case insulation voltage	Uimp	2.5kV		
Outputs/case insulation voltage	Uimp	2.5kV		
Isolation resistance	Rio	1GΩ		
Isolation capacitance	Cio	<8pF		
Maximum junction temperature	Tjmax	175°C		
Storage ambient temperature	Tstg	-40->+100°C		
Operating ambient temperature	Tamb	-25->+90°C		See fig. 7
Max. case temperature	Tc	100°C		

PROTECTION CHARACTERISTICS

PROTECTION

Leakage current (Ielk) vs DC voltage (Ut)

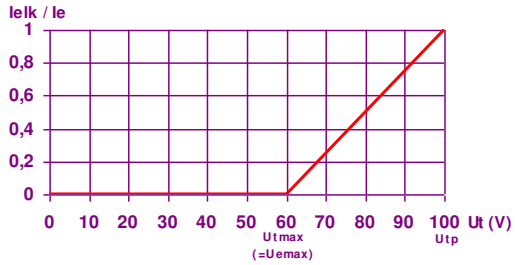

Absolute limits

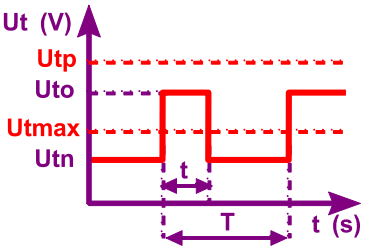

$$Uto < Utp$$

$$t\ max = \frac{0.75}{(Uto - Ut\ max) \times Ie}$$

$$P_{(protection)} = 1W_{max}$$

$$\Rightarrow \frac{(Uto - Ut\ max) \times Ie \times t}{T} \leq 1$$

Ielk : Leakage current of the relay
Ie : User load nominal current
Utp : Relay max. non repetitive peak voltage

Utmax : Max. nominal voltage of the relay
Uto : Possible overvoltage above Utmax
Utn = Ue : User DC power supply voltage

t : Overvoltage duration
T: Time between 2 overvoltage

TIME CHARACTERISTICS

Fig. 4 TIME DIAGRAMS

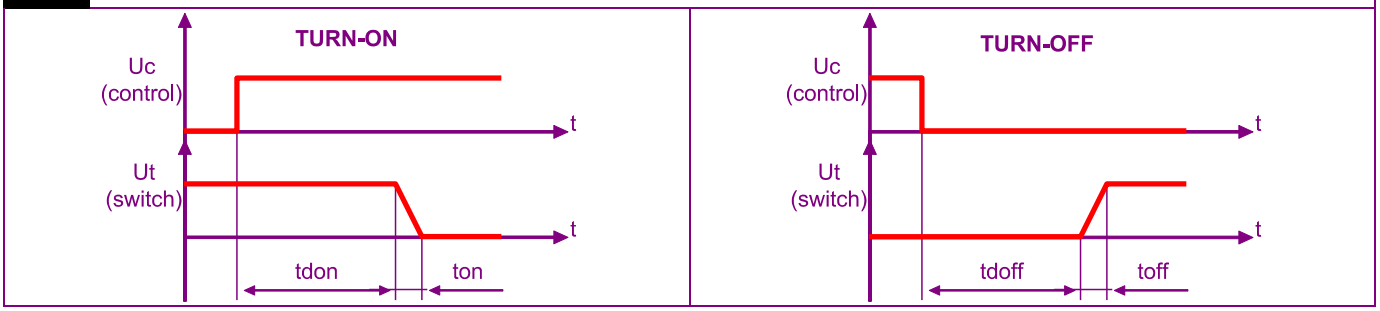

TIME CHARACT.	CHARACTERISTIC	LABEL	VALUE	INFO.
	Turn on time	ton	20µs	
	Turn on delay	tdon	20µs	
	Turn off time	toff	20µs	
	Turn off delay	tdoff	20µs	
	Max. On-Off frequency	$F_{(on-off)}$	>1000Hz (for high frequency, take 2 x Ie to calculate the heatsink; the protections must be chosen carefully)	Refer to the instruction sheet

GENERAL INFORMATION

CONNECTIONS	Connections		Power	Control	
	Screwdriver advised		POZIDRIV2		
	Min and max tightening torque		2 N.m	1.2 N.m	
	Insulated crimp terminals (round tabs, eyelet type)		M5	M4	

MISC.	Display		Green LED (indicates relay has switched ON)	
	Housing		UL94V0	
	Mounting		2 screws (M4x12mm ; tightening = 1.2N.m)	See mounting sheet
	Noise level		None	
	Weight		80g	

STANDARDS

GENERAL	Standards		IEC60947-1	
	Protection level		IP20	
	Protection against direct touch		Yes	
	CE marking		Yes	
	UL, cULUS		Yes	

E.M.C. IMMUNITY	TYPE OF TEST	STANDARD	LEVEL	EFFECT
	Fast transients bursts	EN61000-4-4	4kV criterion B	
	Electric chocks	EN61000-4-5	1kV criterion B	
	Voltage drop	EN61000-4-11	-	

CHARACTERISTIC CURVES

Fig. 5 INPUT CHARACTERISTIC

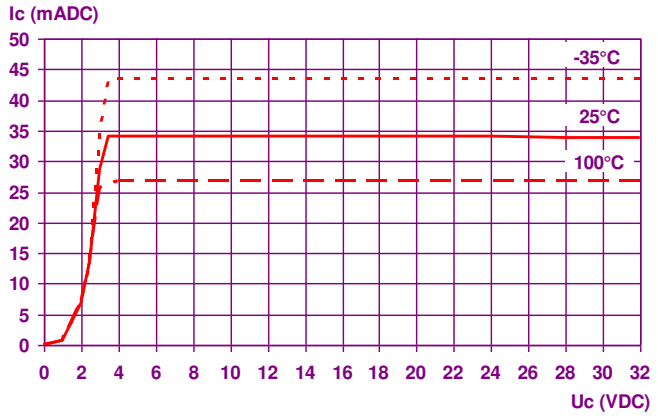

Fig. 6 ON RESISTANCE VS JUNCTION TEMPERATURE

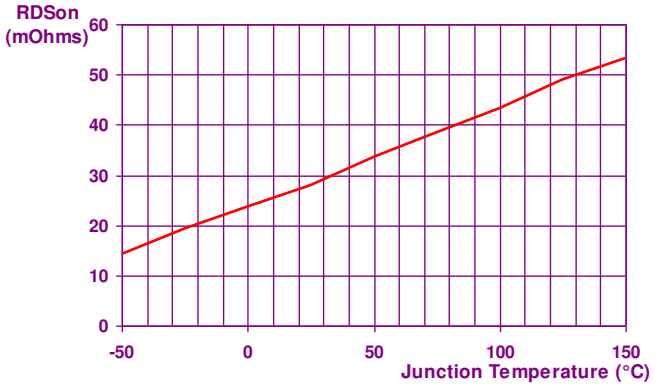

Fig. 7 POWER DISSIPATED AND LOAD CURRENT LIMIT VS TEMPERATURE

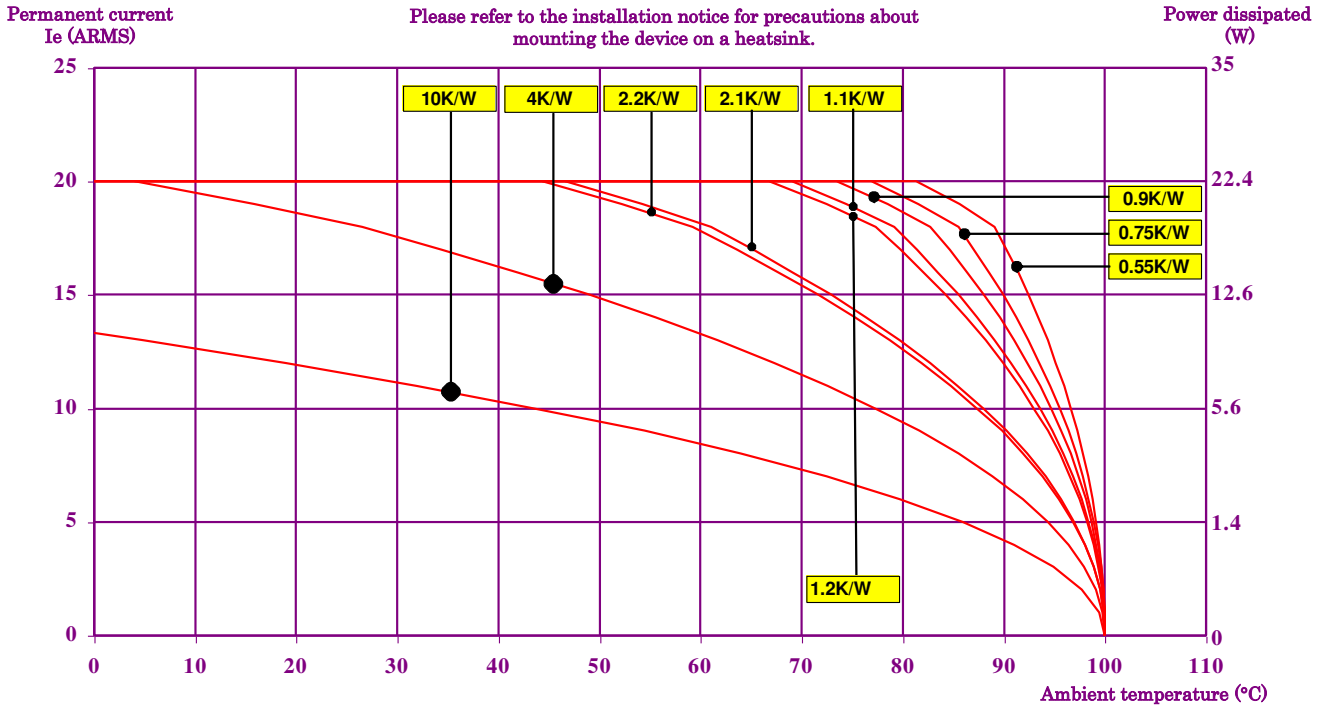

10K/W = No Heatsink
2.1K/W = WF210000
0.75K/W = WF070000
4K/W = 150x150x3mm aluminium sheet
1.2K/W = WF121000
0.55K/W = WF050000
2.2K/W = WF262100
1.1K/W = WF131100
2.2K/W = WF151200
0.9K/W = WF115100

Fig. 8 PEAK OVERLOAD CURRENT vs. PULSE DURATION CHARACTERISTIC

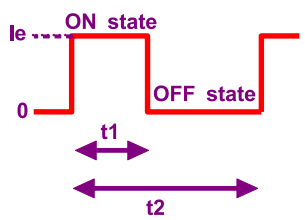

$$D(\%) = \left(\frac{t1}{t2}\right) \times 100$$

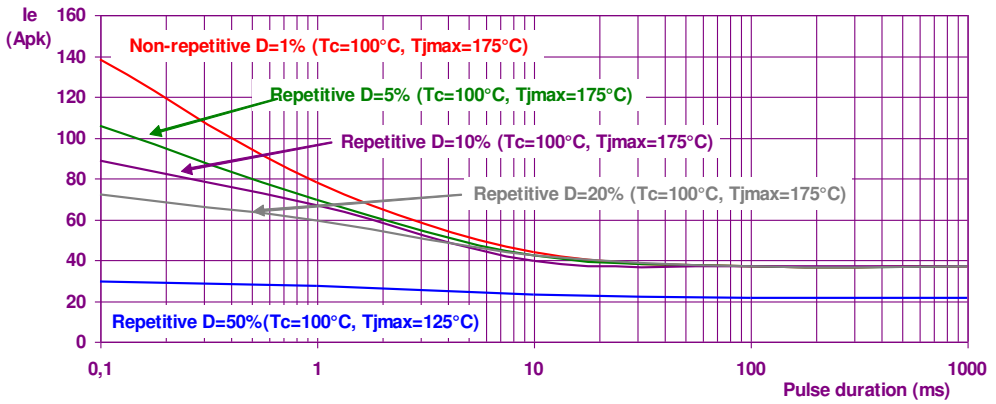

DIMENSIONS AND ACCESSORIES

Fig. 9 DIMENSIONS (mm)

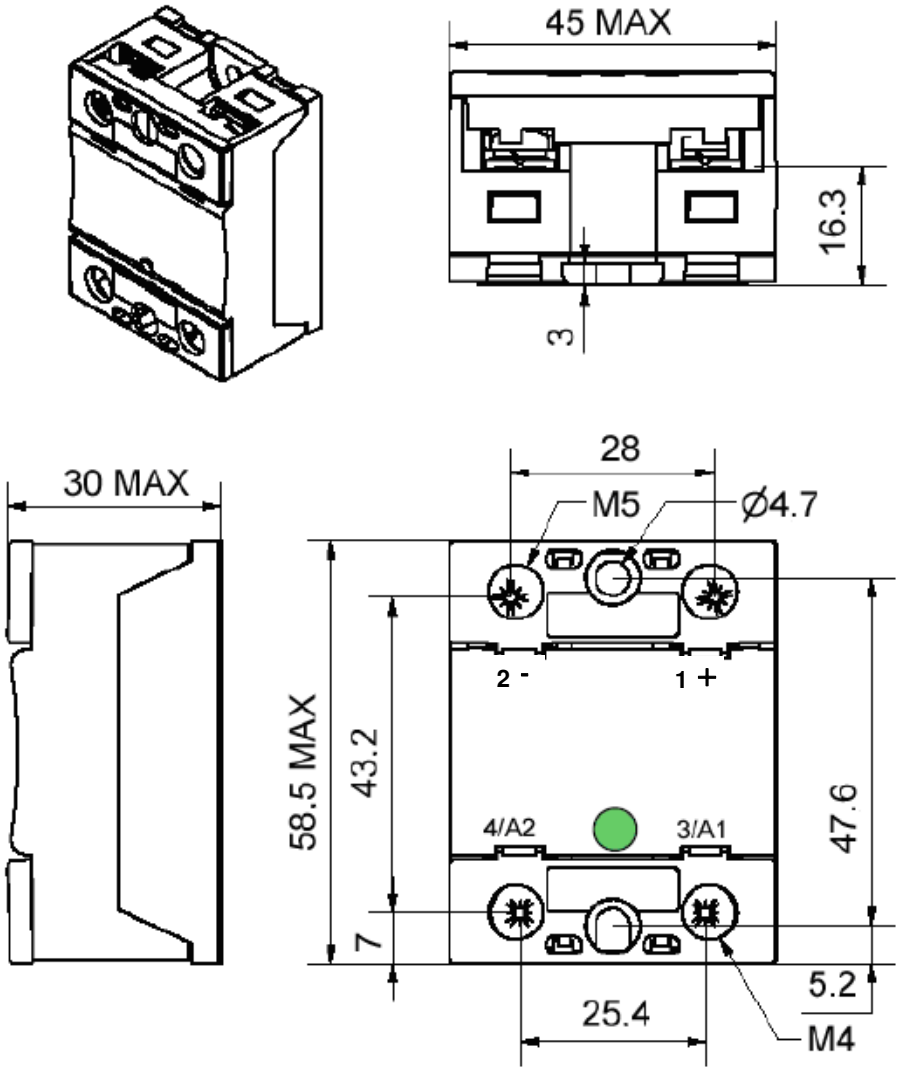

Fig. 10 ACCESSORIES

FASTON : Please contact us

5 Rue Ampère B.P. 30004 42290 SORBIERS - FRANCE E-Mail : celduc-relais@celduc.com
Fax +33 (0) 4 77 53 85 51 Service Commercial France Tél. : +33 (0) 4 77 53 90 20
Sales Dept.For Europe Tel. : +33 (0) 4 77 53 90 21 Sales Dept. Asia : Tél. +33 (0) 4 77 53 90 19