Features:

- Motor: External Rotor Capacitor-Run Induction Motor
- Motor Protection: Thermal Protected
- Bearing Type: Two Ball
- Connection: UL 1015 AWG 22, 300mm Wire Leads or Terminal
- Frame Material: Aluminum Alloy
- Impeller Material: Steel
- **IP56M Certified**
- Operating Temp:
  Two Ball: -20°C~70°C
- Life Expectancy:
  Two Ball: 50,000 Hours
  Two Ball: 100,000 Hours (-L)

IP56M

Fan-S Division

HPLC

RoHS Compliant

Model No.	Volt.	Freq.	Current	Power	Rated Speed	Maximum AirFlow		Maximum Static Pressure		Noise Level	Weight
	(VAC)	(Hz)	(A)	(W)	(rpm)	(CMM)	(CFM)	(InAq)	(mmAq)	(dB/A)	(g)
FDA2-25489NBH * 4D #	115	50/60	0.58/0.88	66.0/97.0	2800/3200	20.94/24.34	740/860	0.886/0.846	22.5/21.5	66.0/68.0	2750
FDA2-25489QBH * 4D #	230	50/60	0.28/0.42	64.0/92.0	2800/3200	20.94/24.34	740/860	0.886/0.846	22.5/21.5	66.0/68.0	2750
FDA2-25489NBL * 4D #	115	50/60	0.34/0.28	30.0/29.0	1400/1650	9.54/12.45	337/440	0.240/0.307	6.1/7.8	50.0/52.0	2750
FDA2-25489QBL * 4D #	230	50/60	0.17/0.14	32.0/32.0	1400/1650	9.54/12.45	337/440	0.240/0.307	6.1/7.8	50.0/52.0	2750

* Indicates "W" (Wire Leads) or "T" (Terminal)

\# Indicates "-L" (100,000 Hours Life Expectancy) or Leave Blank (50,000 Hours Life Expectancy)

Noise is measured at the distance of one (1) meter from the axis of intake.

50Hz

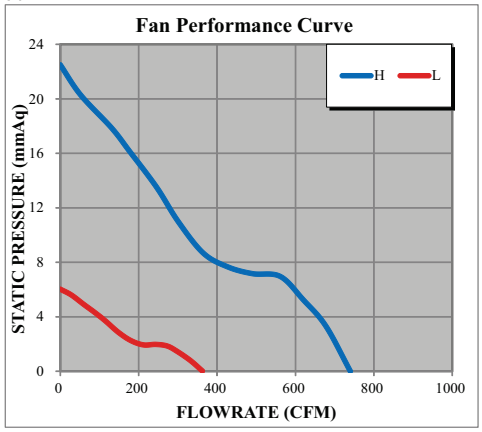
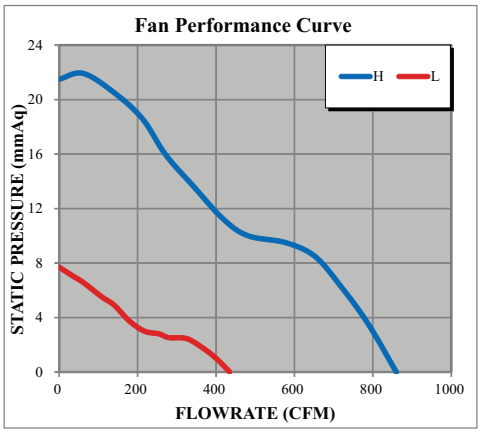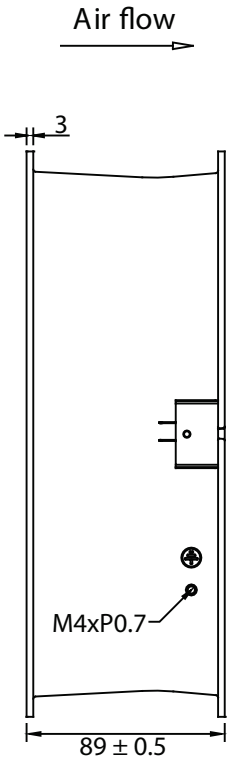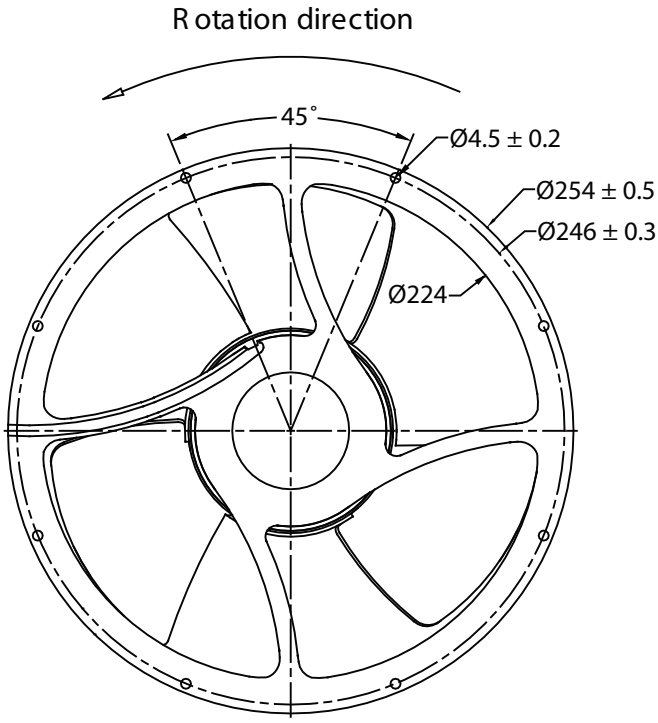
60Hz