3.3V CMOS Low Jitter XO

FK

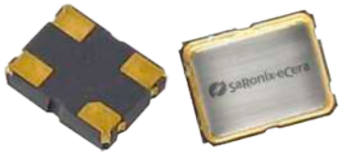

3.2 x 2.5mm Ceramic SMD

Product Features

- 1 to 156.25 MHz Frequency Range
- <1 ps RMS jitter
- 3.3V CMOS compatible logic levels
- Designed for standard reflow and washing techniques
- Low power standby mode
- Pb-free and RoHS/Green compliant

Product Description

The FK Series 3.3V crystal clock oscillator achieves superb stability and low power consumption over a broad range of operating conditions and frequencies. The low jitter output clock signal, generated internally with a non-PLL oscillator design, is compatible with LVCMOS logic levels. The device, available on tape and reel, is contained in a 3.2 x 2.5mm surface-mount ceramic package.

Applications

Ideal for compact, high-density applications requiring low power or tight stability, including:

- Network adapter cards
- Portable Multimedia Devices
- Hard Disk Drives
- GPS/Navigation
- Bluetooth
- 802.11a/b/g WiFi

Package:

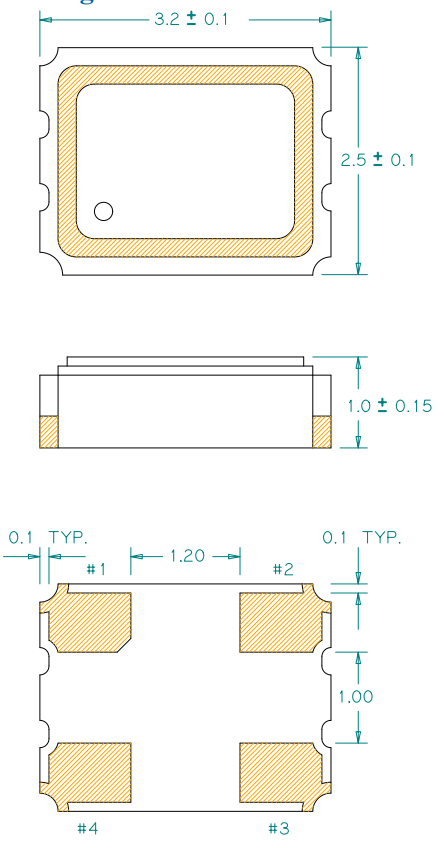

Recommended Land Pattern:

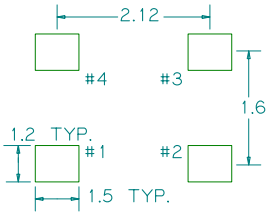

Pin Functions:

Pin	Function
1	OE
2	Ground
3	Clock Output
4	V_{DD}

Part Ordering Information:

FK XXX YYYY

(A) Product Family
(B) XXX = Frequency Code
(C) YYYY = Specification Code

Following the above format, Saronix-eCera part numbers will be assigned upon confirmation of exact customer requirements.

SaRonix-eCera™

FK Series Crystal Clock Oscillator (XO)
3.2 x 2.5mm

Electrical Performance

Parameter		Min.	Typ.	Max.	Units	Notes
Output Frequency		1		156.25	MHz	As specified
Supply Voltage		2.97	3.3	3.63	V	
Supply Current, Output Enabled				10	mA	1 to 50 MHz
				18		50 to 156.25 MHz
Supply Current, Standby Mode				10	µA	Output Hi-Z
Frequency Stability				±20 to ±50	ppm	See Note 1 below
Operating Temperature Range		-20		+70	°C	Commercial (standard)
		-40		+85		Industrial (standard)
Output Logic 0, V_{OL}				10% V_{DD}	V	
Output Logic 1, V_{OH}		90% V_{DD}			V	
Output Load				15	pF	
Duty Cycle		45		55	%	Measured 50% V_{DD}
Rise and Fall Time				5	ns	Measured 10/90% of waveform
Jitter, Phase	1 to 156.25 MHz			1	ps RMS (1-σ)	12kHz to 20 MHz frequency band
Jitter, Accumulated	up to 75 MHz			5	ps RMS (1-σ)	20.000 adjacent periods
	75 to 156.25 MHz			3		
Jitter, Total	up to 75 MHz			50	ps pk-pk	100.000 random periods
	75 to 156.25 MHz			30		

Notes:
1. Stability includes all combinations of operating temperature, load changes, rated input (supply) voltage changes, initial calibration tolerance (25°C), aging (1 year at 25°C average effective ambient temperature), shock and vibration.
2. For specifications othere than those listed, please contact sales.

Output Enable / Disable Function

Parameter	Min.	Typ.	Max.	Units	Notes
Input Voltage (pin 1), Output Enable	0.7 V_{DD}			V	or open
Input Voltage (pin 1), Output Disable (low power standby)			0.3 V_{DD}	V	Output is Hi-Z
Internal Pullup Resistance	50			kΩ	
Output Disable Delay			100	ns	
Output Enable Delay			10	ms	

Absolute Maximum Ratings

Parameter	Min.	Typ.	Max.	Units	Notes
Storage Temperature	-55		+125	°C	

For the latest product information visit: http://www.pericom.com/products/timing/oscillators/FK3.3/

For test circuit go to: http://www.pericom.com/pdf/sre/tc_hcmos2.pdf

For soldering reflow profile and reliability test ratings go to: http://www.pericom.com/pdf/sre/reflow.pdf

For tape and reel information go to: http://www.pericom.com/pdf/sre/tr_3225_xo.pdf