Notification about the transfer of the semiconductor business

The semiconductor business of Panasonic Corporation was transferred on September 1, 2020 to Nuvoton Technology Corporation (hereinafter referred to as "Nuvoton"). Accordingly, Panasonic Semiconductor Solutions Co., Ltd. became under the umbrella of the Nuvoton Group, with the new name of Nuvoton Technology Corporation Japan (hereinafter referred to as "NTCJ").

In accordance with this transfer, semiconductor products will be handled as NTCJ-made products after September 1, 2020. However, such products will be continuously sold through Panasonic Corporation.

Publisher of this Document is NTCJ.
If you would find description “Panasonic” or “Panasonic semiconductor solutions”, please replace it with NTCJ.

※ Except below description page
“Request for your special attention and precautions in using the technical information and semiconductors described in this book”

Nuvoton Technology Corporation Japan

MOS FET

Panasonic FK8V03040L

FK8V03040L

Silicon N-channel MOSFET

For lithium-ion secondary battery protecion circuit
For DC-DC Converter

■ Features

- Low drain-source On-state Resistance
  RDS(on) typ = 11 mΩ (VGS = 4.5 V)
- High-speed switching : Qg = 7.2 nC
- Halogen-free / RoHS compliant
  (EU RoHS / UL-94 V-0 / MSL:Level 1 compliant)

■ Marking Symbol: 3D

■ Packaging

Embossed type (Thermo-compression sealing) : 3 000 pcs / reel (standard)

Unit: mm

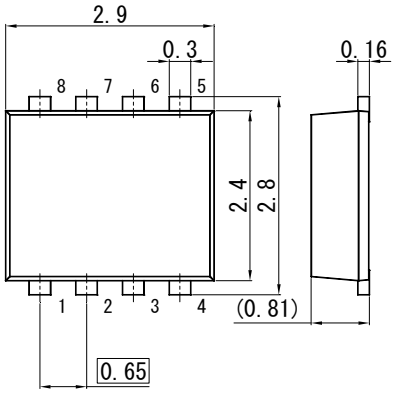

1. Source
2. Source
3. Source
4. Gate
5. Drain
6. Drain
7. Drain
8. Drain

Panasonic	WMini8-F1
JEITA	SC-115
Code	—

■ Absolute Maximum Ratings Ta = 25 °C

Parameter	Symbol	Rating	Unit
Drain-source Voltage	VDS	33	V
Gate-source Voltage	VGS	±20	V
Drain Current (Steady State) *1	ID	10	A
Drain Current (t = 10 s) *1		12	
Drain Current (Pulsed) *1,*2	IDp	40	
Source Current (Pulsed) (Body Diode) *1,*2	ISp (BD)	10	
Total Power Dissipation (Steady State) *1	PD	1	W
Total Power Dissipation (t = 10 s) *1		1.5	
Channel Temperature	Tch	150	°C
Operating Ambient Temperature	Topr	-40 to + 85	°C
Storage Temperature Range	Tstg	-55 to +150	°C

Note) *1 Device mounted on a glass-epoxy board (See Figure 1)
*2 Pulse test: Ensure that the channel temperature does not exceed 150°C.

Internal Connection

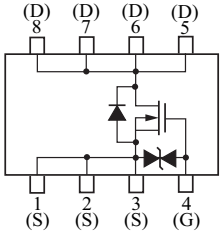

Pin Name

1. Source
2. Source
3. Source
4. Gate
5. Drain
6. Drain
7. Drain
8. Drain

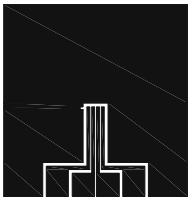

Figure1 FR4 Glass-Epoxy Board
25.4 mm × 25.4 mm × 0.8 mm

Established : 2011-04-06
Revised : 2013-07-31

■ Electrical Characteristics Ta = 25°C ± 3°C

Static Characteristics

Parameter	Symbol	Conditions	Min	Typ	Max	Unit
Drain-source Breakdown Voltage	VDSS	ID = 1 mA, VGS = 0 V	33			V
Zero Gate Voltage Drain Current	IDSS	VDS = 33 V, VGS = 0 V			10	μA
Gate-source Leakage Current	IGSS	VGS = ±16 V, VDS = 0 V			±10	μA
Gate-source Threshold Voltage	Vth	ID = 1.12 mA, VDS = 10 V	1		2.5	V
Drain-source On-state Resistance *1	RDS(on)1	ID = 5A, VGS = 10 V		7	10	mΩ
	RDS(on)2	ID = 5A, VGS = 4.5 V		11	19	

Dynamic Characteristics

Input Capacitance	Ciss	VDS = 10 V, VGS = 0 V f = 1 MHz		750		pF
Output Capacitance	Coss			170		
Reverse Transfer Capacitance	Crss			100		
Turn-on Delay Time *2	td(on)	VDD = 15 V, VGS = 0 to 10 V ID = 5 A		9		ns
Rise Time *2	tr			6		
Turn-off Delay Time *2	td(off)	VDD = 15 V, VGS = 10 to 0 V ID = 5 A		46		
Fall Time *2	tf			18		
Total Gate Charge	Qg	VDD = 15 V, VGS = 0 to 4.5 V, ID = 10 A		7.2		nC
Gate-source Charge	Qgs			2.3		
Gate-drain Charge	Qgd			3.3		

Body Diode Characteristic

Diode Forward Voltage *1	VSD	IS = 5 A, VGS = 0 V		0.8	1.2	V

Note) 1. Measuring methods are based on JAPANESE INDUSTRIAL STANDARD JIS C 7030 Measuring methods for transistors.
2. *1 Pulse test: Ensure that the channel temperature does not exceed 150°C.
*2 Measurement circuit for Turn-on Delay Time/Rise Time/Turn-off Delay Time/Fall Time

Established : 2010-01-01
Revised : 2010-03-31

*2 Measurement circuit for Turn-on Delay Time/Rise Time/Turn-off Delay Time/Fall Time

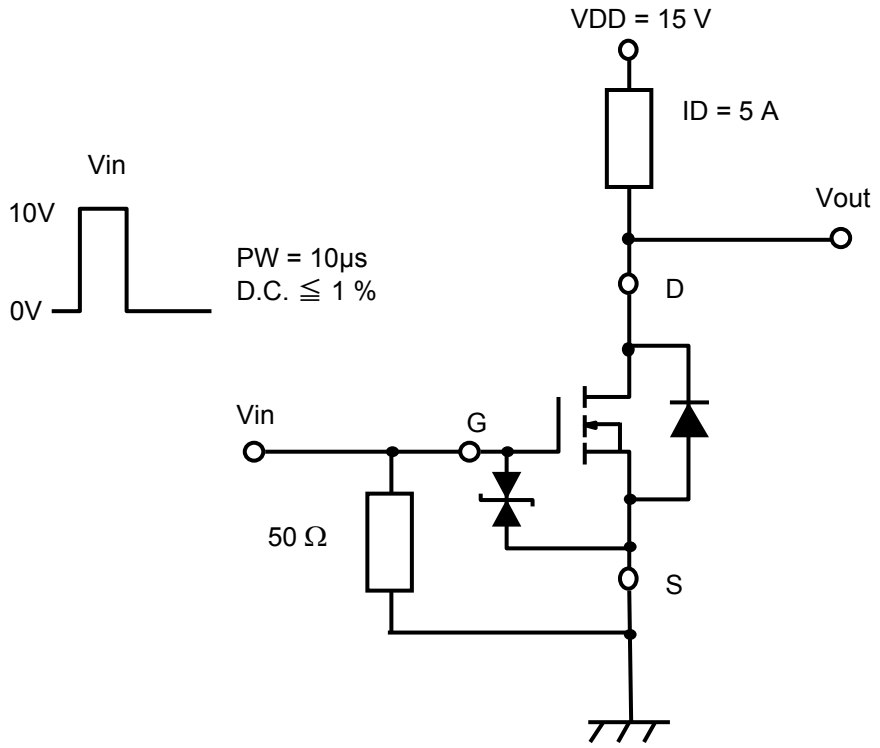

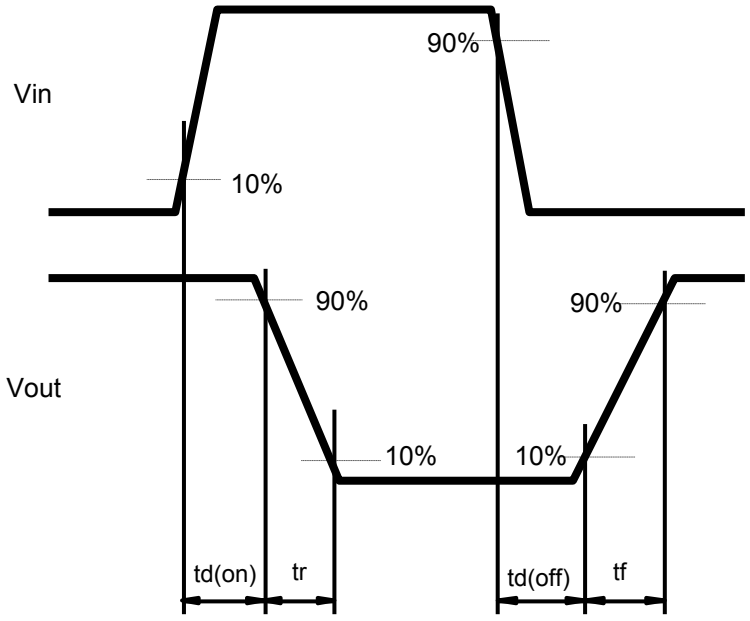

Established : 2011-04-06
Revised : 2013-07-31

Technical Data (reference)

ID - VDS

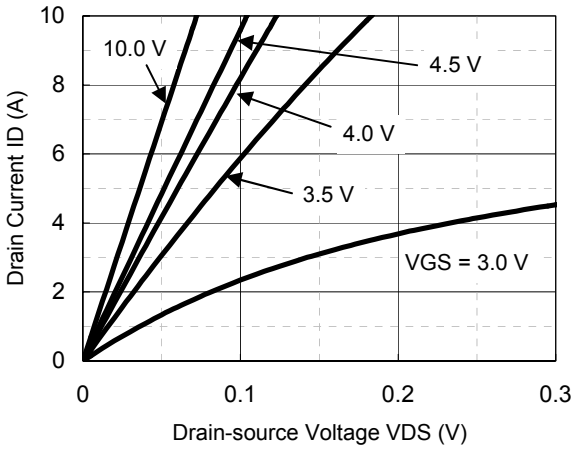

ID - VGS

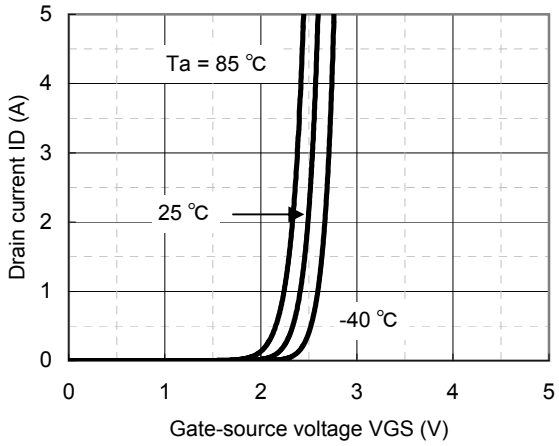

VDS - VGS

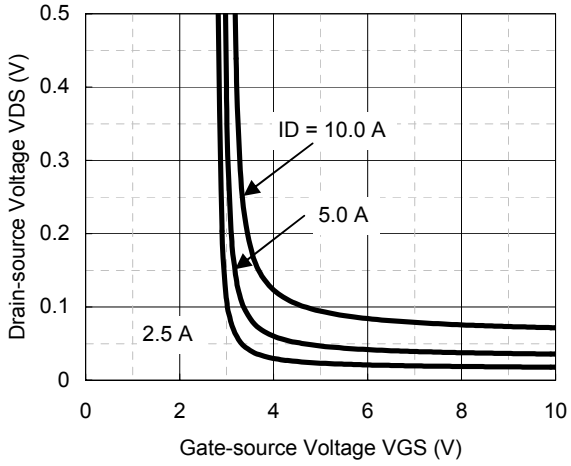

RDS(on) - ID

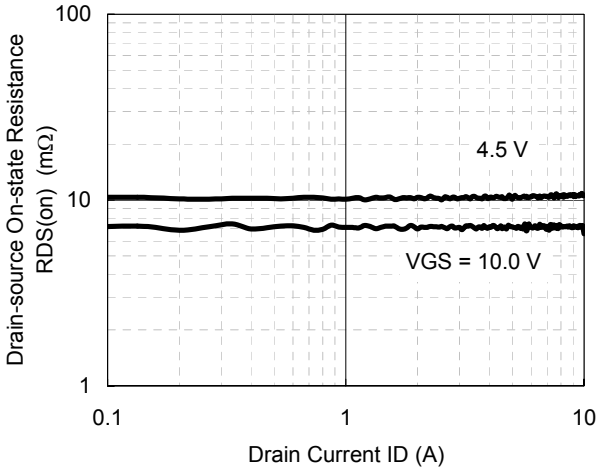

Capacitance - VDS

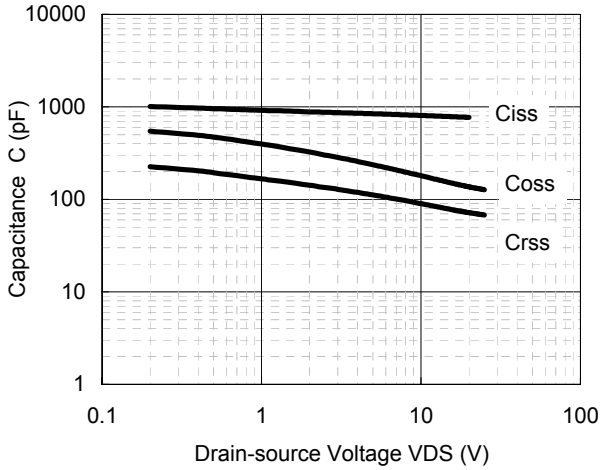

Dynamic Input/Output Characteristics

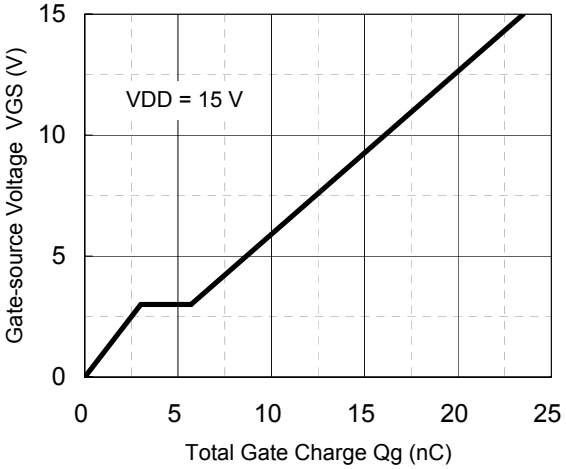

Established : 2011-04-06
Revised : 2013-07-31

Technical Data (reference)

Vth - Ta

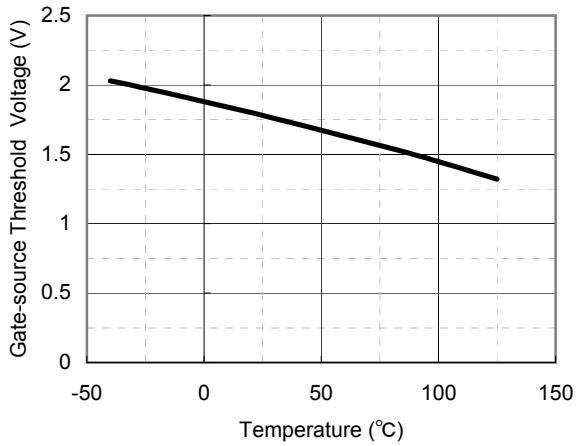

RDS(on) - Ta

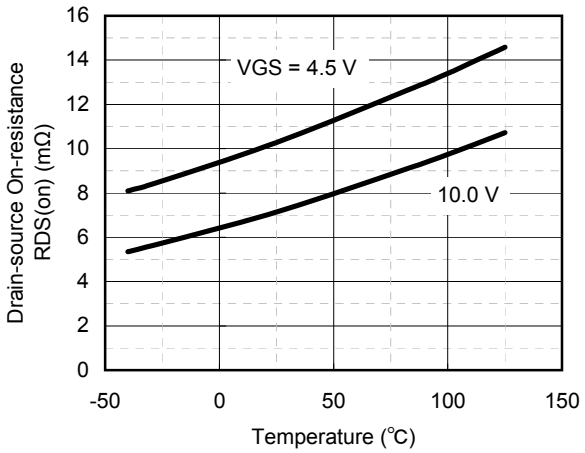

PD - Ta

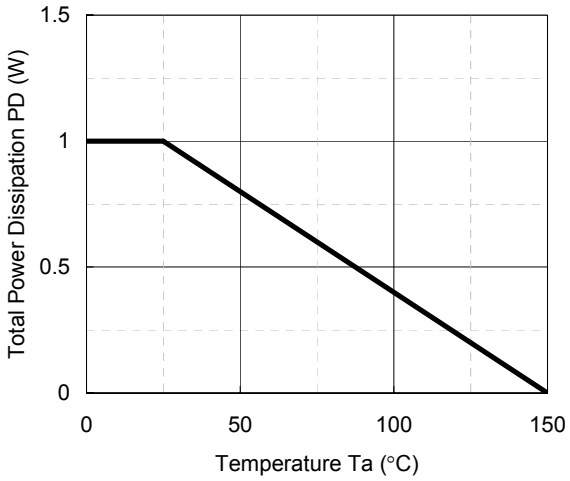

Rth - tsw

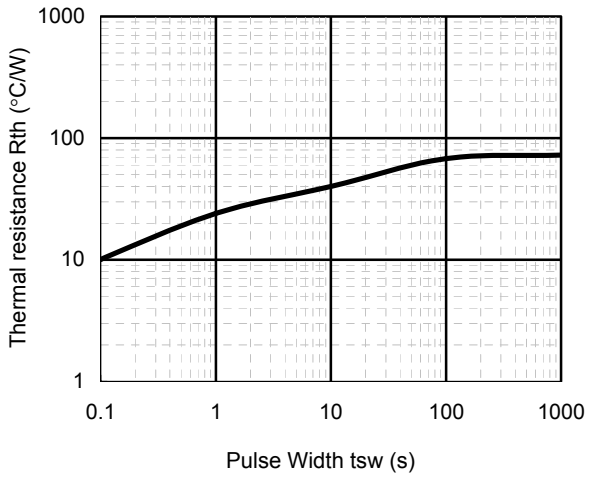

Safe Operating Area

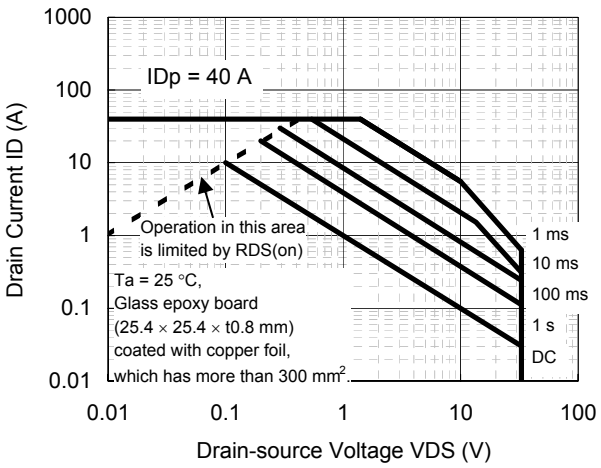

Established : 2011-04-06
Revised : 2013-07-31

WMini8-F1

Unit : mm

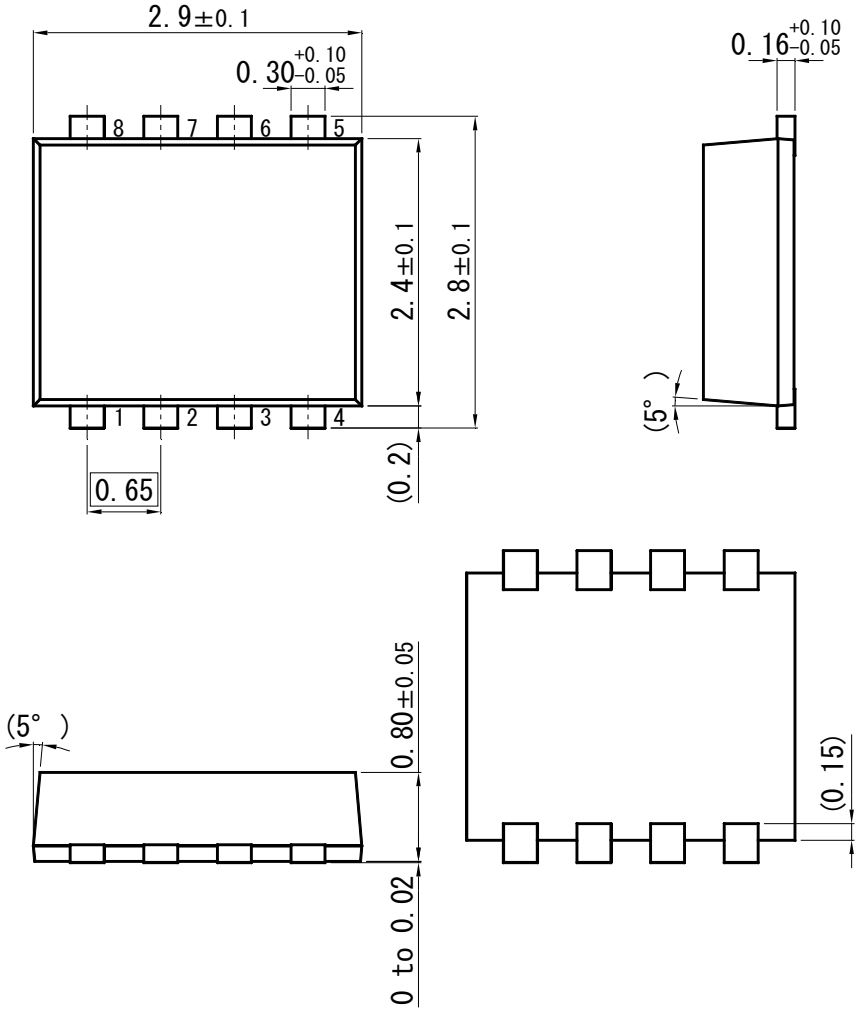

■ Land Pattern (Reference) (Unit : mm)

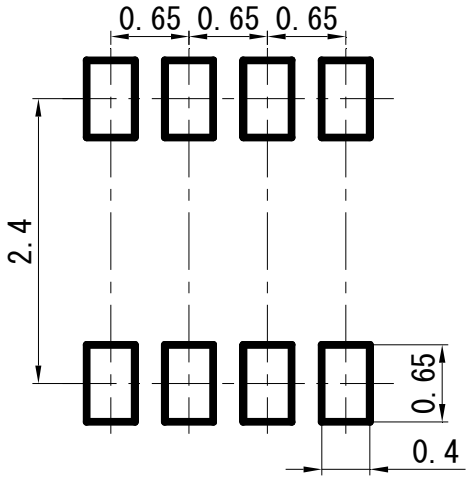

Established : 2011-04-06
Revised : 2013-07-31

Request for your special attention and precautions in using the technical information and semiconductors described in this book

(1) If any of the products or technical information described in this book is to be exported or provided to non-residents, the laws and regulations of the exporting country, especially, those with regard to security export control, must be observed.

(2) The technical information described in this book is intended only to show the main characteristics and application circuit examples of the products. No license is granted in and to any intellectual property right or other right owned by Panasonic Corporation, Nuvoton Technology Corporation Japan or any other company. Therefore, no responsibility is assumed by our company as to the infringement upon any such right owned by any other company which may arise as a result of the use of technical information de-scribed in this book.

(3) The products described in this book are intended to be used for general applications (such as office equipment, communications equipment, measuring instruments and household appliances), or for specific applications as expressly stated in this book.
Please consult with our sales staff in advance for information on the following applications, moreover please exchange documents separately on terms of use etc.: Special applications (such as for in-vehicle equipment, airplanes, aerospace, automotive equipment, traffic signaling equipment, combustion equipment, medical equipment and safety devices) in which exceptional quality and reliability are required, or if the failure or malfunction of the products may directly jeopardize life or harm the human body.
Unless exchanging documents on terms of use etc. in advance, it is to be understood that our company shall not be held responsible for any damage incurred as a result of or in connection with your using the products described in this book for any special application.

(4) The products and product specifications described in this book are subject to change without notice for modification and/or improvement. At the final stage of your design, purchasing, or use of the products, therefore, ask for the most up-to-date Product Standards in advance to make sure that the latest specifications satisfy your requirements.

(5) When designing your equipment, comply with the range of absolute maximum rating and the guaranteed operating conditions (operating power supply voltage and operating environment etc.). Especially, please be careful not to exceed the range of absolute maximum rating on the transient state, such as power-on, power-off and mode-switching. Other-wise, we will not be liable for any defect which may arise later in your equipment.
Even when the products are used within the guaranteed values, take into the consideration of incidence of break down and failure mode, possible to occur to semiconductor products. Measures on the systems such as redundant design, arresting the spread of fire or preventing glitch are recommended in order to prevent physical injury, fire, social damages, for example, by using the products.

(6) Comply with the instructions for use in order to prevent breakdown and characteristics change due to external factors (ESD, EOS, thermal stress and mechanical stress) at the time of handling, mounting or at customer's process. We do not guarantee quality for disassembled products or the product re-mounted after removing from the mounting board.
When using products for which damp-proof packing is required, satisfy the conditions, such as shelf life and the elapsed time since first opening the packages.

(7) When reselling products described in this book to other companies without our permission and receiving any claim of request from the resale destination, please understand that customers will bear the burden.

(8) This book may be not reprinted or reproduced whether wholly or partially, without the prior written permission of our company.

No.070920