SPECIFICATIONS

DEVICE TYPE NAME

SANKEN SILICON SCHOTTKY BARRIER DIODE FMB-24M

Not Recommended for New Designs

1. Scope

The present specifications shall apply to Sanken silicon diode, FMB-24M.

2. General

2.1 Type
Silicon Schottky Barrier Diode

2.2 Structure
Resin Molded

2.3 Application
Pulse Rectification, etc

3. Flammability

UL94V-0 (Equivalent)

4. Dimensions, Inner Structure and Marking

4.1 Appearance

The body shall be clean and shall not bear any stain, rust or flaw.
The color of the case will be black.

4.2 Dimensions Refer to 9.1

4.3 Marking : Refer to 9.2

4.4 Inner Structure : Refer to 9.3

DATE of PROCESSING	September/28/ 2013		
PREPAREE BY	M.TSURUOKA	/ /	
CHECKED BY	H.UCHINO	/ /	SPECIFICATION NUMBER
APPROVED BY	Y.ARAI	/ /	SSA-03414

61330

5. Absolute Maximum Ratings

				FMB-24M	
No.	Item	Symbol	Unit	Rating	Conditions
1	Transient Peak Reverse Voltage	V_{RSM}	V	45	
2	Peak Reverse Voltage	V_{RM}	V	40	
3	Average Forward Current	$I_{F(AV)}$	A	6.0	Tc≦123℃, Sinewave
4	Peak Surge Forward Current	I_{FSM}	A	60	half sinewave, one shot
5	I^2t Limiting Value	I^2t	A^2s	18	1msec≦t≦10msec
6	Junction Temperature	T_j	℃	-40～+150	
7	Storage Temperature	T_{stg}	℃	-40～+150	
8	Dielectric Strength		kV	A.C. 1.0	Junction and case(1min.)

Not Recommended for New Designs

6. Electrical Characteristics (Ta=25℃, unless otherwise specified)

No.	Item	Symbol	Unit	Value	Conditions
1	Forward Voltage Drop	V_F	V	0.55 max.	I_F=3.0A
2	Reverse Leakage Current	I_R	mA	3.0 max.	$V_R=V_{RM}$
3	Reverse Leakage Current Under High Temperature	H･I_{R1}	mA	30 max.	$V_R=V_{RM}$, T_j=125℃
		H･I_{R2}	mA	100 max.	$V_R=V_{RM}$, T_j=150℃
4	Thermal Resistance	$R_{th(j-C)}$	℃/W	4.0 Max.	Between Junction and case

* No.1,2&3 show characteristics per one chip.

7. Reliability Test

7.1 Test Conditions

No.	Item	Rating	Conditions
1	Thermal Fatigue Test	5000 cycles	⊿Tj=100℃
2	High Temperature Reverse Bias Test	1000 hours	Ta=80℃, V_R=V_{RM}(D.C.) With Fin
3	Humidity Reverse Bias Test	500 hours	Ta=85℃, R.H.=85%, VR=VRM×0.8(D.C.)
4	High Temperature Storage Test	1000 hours	Ta=150℃
5	Moisture Resistance Test	1000 hours	Ta=85℃, 85%R.H.
6	Thermal Shock Test	100 cycle	Ice-water(5min.) ~ R.T.(30sec.) ~ Boiling-water(5min.)
7	Temperature Cycle Test	100 cycle	-40℃(30min.) ~ +150℃(30min.)
8	Pressure Cooker Test	96 hours	2.03×10^5Pa, 100%R.H., Unsaturated equipment
9	Resistance to Soldering Heat Test	10 sec.	260±5℃, Dipping up to 1.5mm form case
		3 sec.	350±5℃, Dipping up to 1.5mm from case
10	Solderability Test	95%	235±5℃, 5sec., Using rosin flux
11	Lead Bend Test	2 times	Apply EIAJ ED-4701 A-111
12	Lead Pull Test	10 sec.	
13	Lead Twist Test	2 times	
14	Drop Test	10 times	Naturally drop from 1m height on maple plate

Not Recommended for New Designs

7.2 Acceptance Criteria

Base on the fulfillment of electrical characteristics of 6.Lead shall be not cut of No.11, 12 and 13.

8. Standard Test Condition

Standard test conditions are at Ta=25℃ and R.H=60%.

But it is also acceptable to do test under ordinary temperature and ordinary R.H.(Ta=5~35 ℃, R.H=45~85%)

9. Dimensions, Inner Structure and Marking

9.1 Dimensions Refer

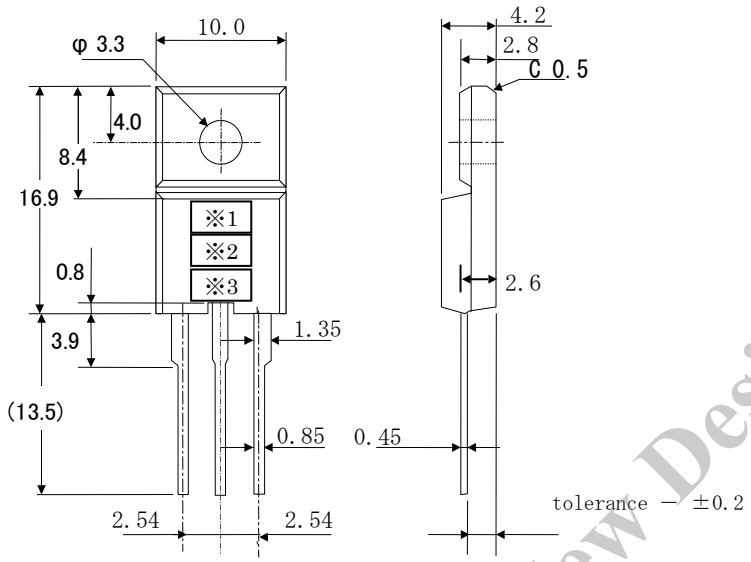

Dimensions in mm

9.2 Marking

Type Name	Marking		
	＊1 Type Name	＊2 Polarity	＊3 Lot number
FMB-24M	FMB24M		1st letter: Last digit of year 2nd letter: Month From 1 to 9 for Jan. to Sep., O for Oct., N for Nov., D for Dec. 3rd & 4th letter: Day ex. 0125 (Jan.25, 2000)

9.3 Inner Structure and Material List

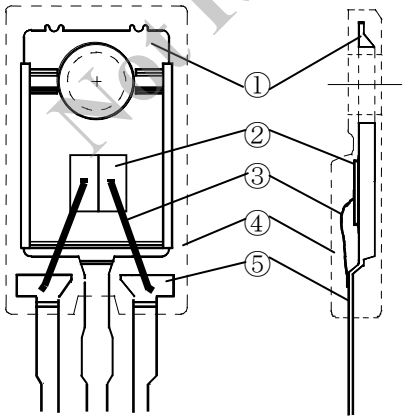

No.	Name of part	Materials
①	Frame: Heat Sink	Nickel Plated Copper
②	Chip	Silicon
③	Inner Leads	Aluminum Wire
④	Resin body	Epoxy Resin
⑤	Frame: Pin	Nickel Plated Copper + Solder Dipped

Weight of products: Approx. 2.1g

Not Recommended for New Designs

10. Characteristics

$I_{F(AV)}$ – P_F

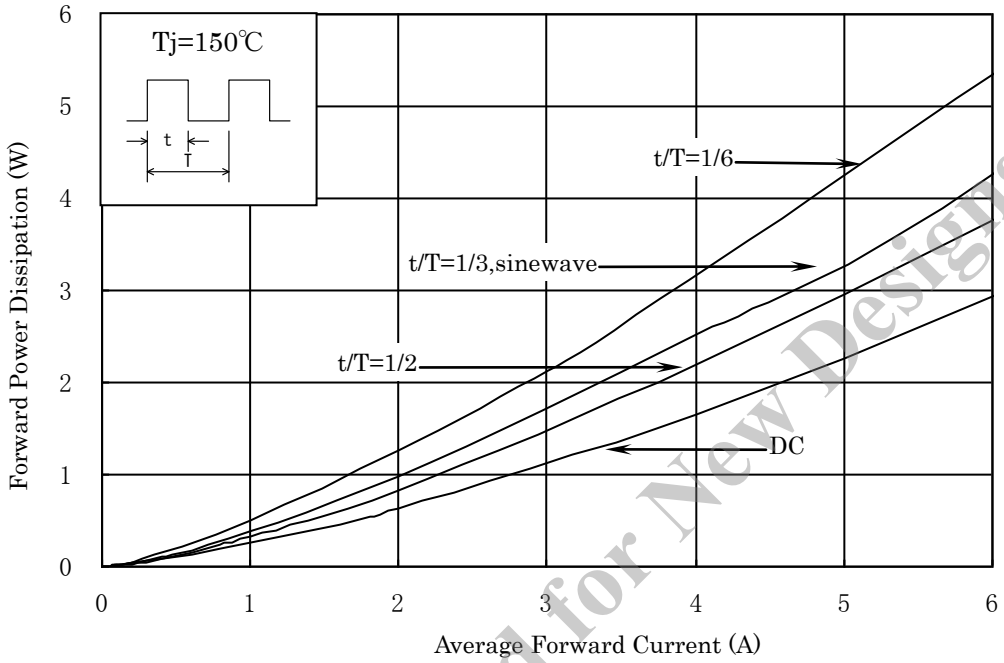

V_R – P_R

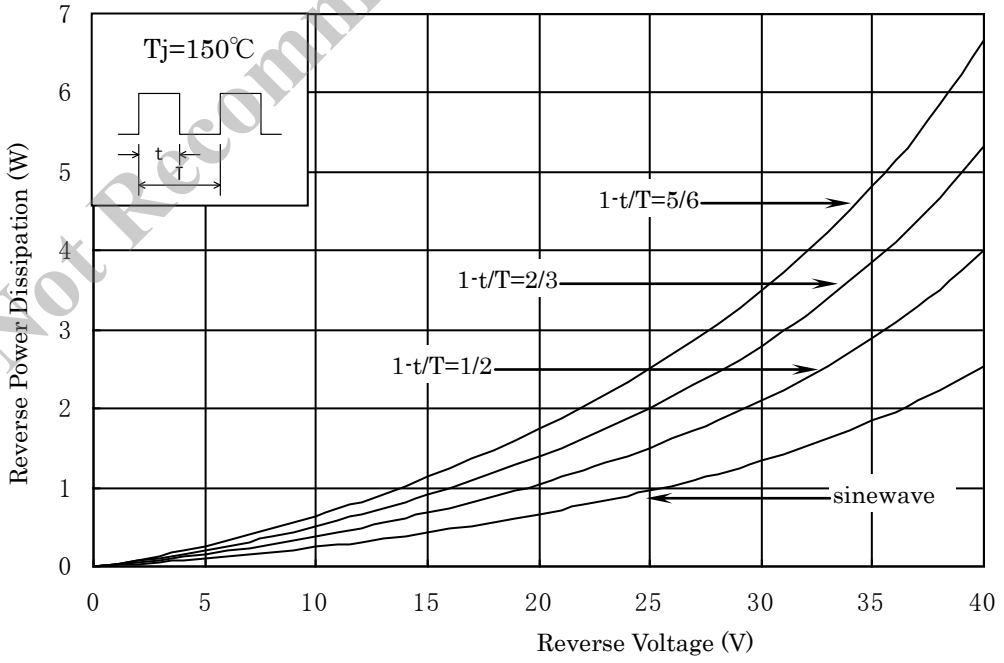

Not Recommended for New Designs

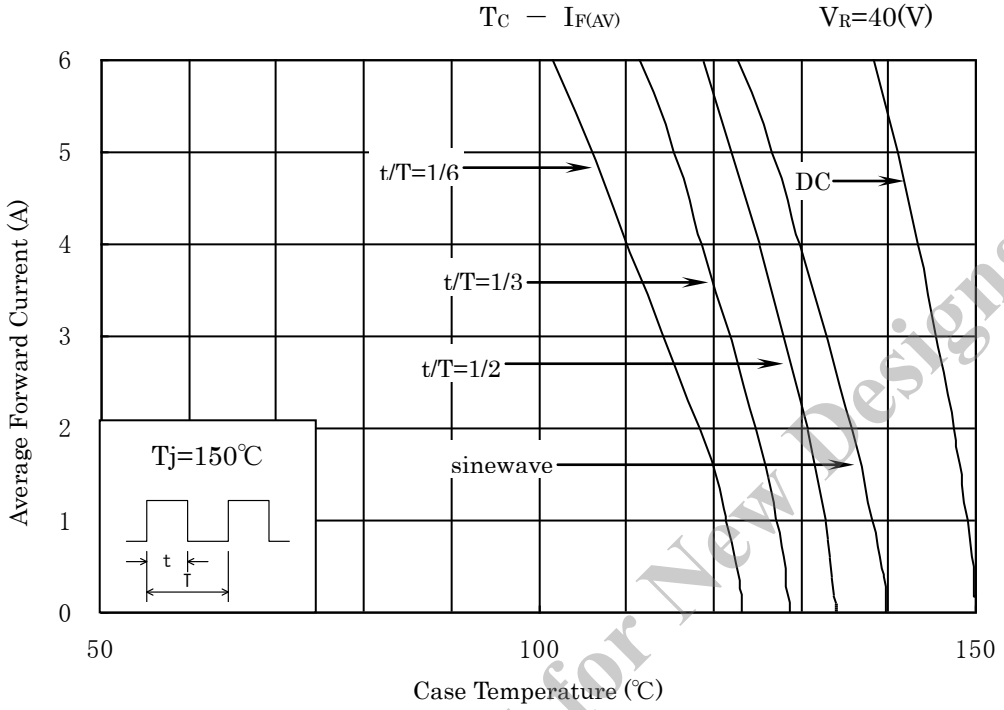

Not Recommended for New Designs

† CAUTION/ WARNING

Remarks in using silicone grease for a heat-sink

When silicone grease is used in mounting this product on a heat-sink, it shall be applied evenly and thinly. If more silicone grease than required is applied, it may produce forced stress.

Volatile type silicone grease may produce cracks after elapse of long term, resulting in reducing heat radiation effect. Silicone grease with low consistency (hard grease) may cause cracks in the mold resin when screwing the product to a heat-sink.

Depending on silicone grease to be used base oil separated from the silicone grease may penetrate into the product through possible thinner gaps between the mold resin and the lead-frame to cause wire breakage or cracks in the mold resin by swelling the coating material inside the product, resulting in the shorter product life. Therefore, silicone grease which contains base oil not causing swelling of coating materials must be selected.

Our recommended silicone grease for heat radiation purpose which will not cause any adverse effect on the product life is indicated below:

Type	Suppliers
G746	Shin-Etsu Chemical Co., Ltd.
YG6260	Toshiba Silicone Co., Ltd.
SC102	Dow Corning Toray Silicone Co., Ltd.

Not Recommended for New Designs

(2) Mounting Method of Heatsink

● Torque when Tightening Screws Mounting

Thermal resistance increases when tightening torque is small, and radiation effects are decreased. When the torque is too high, the screw can cut, the heatsink can be deformed, and/or distortion can be arise in the product's frame. To avoid these problems, Table1. show the recommended tightening torque for each product type.

Table1. Screw Tightening Torque

Package	Screw Tightening Torque
MT25 FM20 (TO-220 & Full Mold)	0.490 to 0.686 N・m (5 to 7 kgf・cm)
MT100 FM100 (TO-3P & Full Mold)	0.686 to 0.882 N・m (7 to 9 kgf・cm)

● Diameter of hole of heatsink: Less than 4mm ϕ

As the slack of press mold for making the hole will be the cause of resin crack at the mounting, please pay special attention for that.

(3) Others

- Application and operation examples described in this document are quoted for the sole purpose of reference for the use of the products herein and Sanken can assume no responsibility for any infringement of industrial property rights, intellectual property rights or any other rights of Sanken or any third party which may result from its use.

- When using the products herein, the applicability and suitability of such products for the intended purpose object shall be reviewed at the users responsibility.

- Although Sanken undertakes to enhance the quality and reliability of its products, the occurrence of failure and defect of semiconductor products at a certain rate is inevitable. Users of Sanken products are requested to take, at their own risk, preventative measures including safety design of the equipment or systems against any possible injury, death, fires or damages to the society due to device failure or malfunction.

- Sanken products listed in this document are designed and intended for the use as components in general purpose electronic equipment or apparatus (home appliances, office equipment, telecommunication equipment, measuring equipment, etc.). Please return to us this document with your signature(s) or seal(s) prior to the use of the products herein.
  When considering the use of Sanken products in the applications where higher reliability is required (traffic signal control systems o equipment, fire/crime alarm systems, various safety devices, etc.), please contact your nearest Sanken sales representative to discuss, and then return to us this document with your signature(s) or seal(s) prior to the use of the products herein.
  The use of Sanken products without the written consent of Sanken in the applications where extremely high reliability is required (aerospace equipment, nuclear power control systems, life support systems, etc.) is strictly prohibited.

- Anti radioactive ray design is not considered for the products listed herein.

Not Recommended for New Designs