COMMENT:
ALL RIGHTS ARE RESERVED BY US FOR THIS DRAWING. WITHOUT OUR PRIOR CONSENT,
IT MAY NEITHER BE DUPLICATED NOR MADE AVAILABLE TO A THIRD PARTY,
AND IT ALSO MAY NOT BE IMPROPERLY USED BY TE RECEIVER, OR A THIRD PARTY.

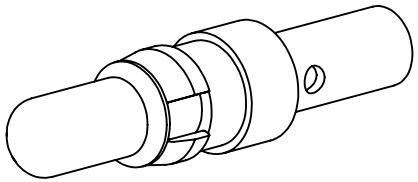

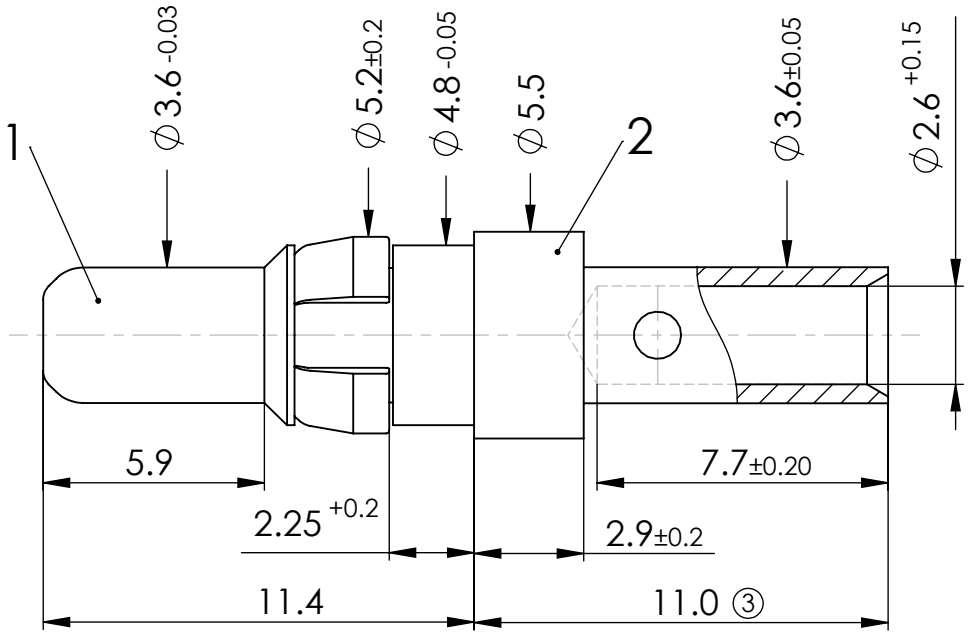

Text No. W-4

FCT tools:

Hand tool: M309

Pneumatic crimp tool: WA27-309

Die: SP994

Selector Number:
AWG 12 / SEL. 5
AWG 14 / SEL. 4

CURRENT 20 A			*HIGH POWER CONTACT*	SCALE 5:1	DATA SHEET
FOR D-Sub			NAME / DATE		
DIMENSIONS IN MM			DRAWN Steinbrück 14-05-2003		
MATERIAL + FINISH SEE EXTRA SHEET			CHECKED ffuhrmann 15-12-2006		
UNLESS OTHERWISE SPECIFIED DIMENSIONS FOR REFERENCE ONLY			FCT a molex company	PART NO. FMP003P	REV. 3
3	12-04-2007	11507			
REV.	DATE	INDEX	ORIGINAL: DIN A4-DRAWING AS A FILE	REPLACEMENT FOR:	PAGE: 1/1