Freescale Semiconductor
Data Sheet: Technical Data

Document Number: MCIMX31
Rev. 4.1, 11/2008

MCIMX31 and MCIMX31L

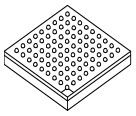

Package Information
Plastic Package
Case 1581 14 x 14 mm, 0.5 mm Pitch
Case 1931 19 x 19 mm, 0.8 mm Pitch

Ordering Information
See Table 1 on page 3 for ordering information.

MCIMX31 and MCIMX31L

Multimedia Applications Processors

1 Introduction

The MCIMX31 and MCIMX31L multimedia applications processors represent the next step in low-power, high-performance application processors. Unless otherwise specified, the material in this data sheet is applicable to both the MCIMX31 and MCIMX31L processors and referred to singularly throughout this document as MCIMX31. The MCIMX31L does not include a graphics processing unit (GPU).

Based on an ARM11™ microprocessor core, the MCIMX31 provides the performance with low power consumption required by modern digital devices such as:

- Feature-rich cellular phones
- Portable media players and mobile gaming machines
- Personal digital assistants (PDAs) and Wireless PDAs
- Portable DVD players
- Digital cameras

The MCIMX31 takes advantage of the ARM1136JF-S™ core running at up to 532 MHz, and is optimized for

Contents

Introduction 1
Features 2
Ordering Information 3
Block Diagram 4
Functional Description and Application Information 4
ARM11 Microprocessor Core 4
Module Inventory 6
Signal Descriptions 9
Electrical Characteristics 10
Chip-Level Conditions 10
Supply Power-Up/Power-Down Requirements and Restrictions 18
Module-Level Electrical Specifications 21
Package Information and Pinout 104
MAPBGA Production Package—457 14 x 14 mm, 0.5 mm Pitch 104
MAPBGA Production Package—473 19 x 19 mm, 0.8 mm Pitch 110
Ball Maps 116
Product Differences 118
Product Documentation 119
Revision History 120

This document contains information on a new product. Specifications and information herein are subject to change without notice.

© Freescale Semiconductor, Inc., 2005–2008. All rights reserved.

Because of an order from the United States International Trade Commission, BGA-packaged product lines and part numbers indicated here currently are not available from Freescale for import or sale in the United States prior to September 2010: i.MX31 Product Family

Downloaded from Arrow.com.

minimal power consumption using the most advanced techniques for power saving (DPTC, DVFS, power gating, clock gating). With 90 nm technology and dual-Vt transistors (two threshold voltages), the MCIMX31 provides the optimal performance versus leakage current balance.

The performance of the MCIMX31 is boosted by a multi-level cache system, and features peripheral devices such as an MPEG-4 Hardware Encoder (VGA, 30 fps), an Autonomous Image Processing Unit, a Vector Floating Point (VFP11) co-processor, and a RISC-based SDMA controller.

The MCIMX31 supports connections to various types of external memories, such as DDR, NAND Flash, NOR Flash, SDRAM, and SRAM. The MCIMX31 can be connected to a variety of external devices using technology, such as high-speed USB2.0 OTG, ATA, MMC/SDIO, and compact flash.

1.1 Features

The MCIMX31 is designed for the high-tier, mid-tier smartphone markets, and portable media players. They provide low-power solutions for high-performance demanding multimedia and graphics applications.

The MCIMX31 is built around the ARM11 MCU core and implemented in the 90 nm technology.

The systems include the following features:

- Multimedia and floating-point hardware acceleration supporting:
  - MPEG-4 real-time encode of up to VGA at 30 fps
  - MPEG-4 real-time video post-processing of up to VGA at 30 fps
  - Video conference call of up to QCIF-30 fps (decoder in software), 128 kbps
  - Video streaming (playback) of up to VGA-30 fps, 384 kbps
  - 3D graphics and other applications acceleration with the ARM® tightly-coupled Vector Floating Point co-processor
  - On-the-fly video processing that reduces system memory load (for example, the power-efficient viewfinder application with no involvement of either the memory system or the ARM CPU)
- Advanced power management
  - Dynamic voltage and frequency scaling
  - Multiple clock and power domains
  - Independent gating of power domains
- Multiple communication and expansion ports including a fast parallel interface to an external graphic accelerator (supporting major graphic accelerator vendors)
- Security

Because of an order from the United States International Trade Commission, BGA-packaged product lines and part numbers indicated here currently are not available from Freescale for import or sale in the United States prior to September 2010: i.MX31 Product Family

Downloaded from Arrow.com.

1.2 Ordering Information

Table 1 provides the ordering information for the MCIMX31.

Table 1. Ordering Information

Part Number	Silicon Revision[1, 2, 3,4]	Device Mask	Operating Temperature Range (°C)	Package[5]
MCIMX31VKN5	1.15	2L38W and 3L38W	0 to 70	14 x 14 mm, 0.5 mm pitch, MAPBGA-457, Case 1581
MCIMX31LVKN5	1.15	2L38W and 3L38W	0 to 70	
MCIMX31VKN5B	1.2	M45G	0 to 70	
MCIMX31LVKN5B	1.2	M45G	0 to 70	
MCIMX31VKN5C	2.0	M91E	0 to 70	14 x 14 mm, 0.5 mm pitch, MAPBGA-457, Case 1581
MCIMX31LVKN5C	2.0	M91E	0 to 70	
MCIMX31CVKN5C	2.0	M91E	–40 to 85	
MCIMX31LCVKN5C	2.0	M91E	–40 to 85	
MCIMX31VMN5C	2.0	M91E	0 to 70	19 x 19 mm, 0.8 mm pitch, Case 1931
MCIMX31LVMN5C	2.0	M91E	0 to 70	

1 Information on reading the silicon revision register can be found in the IC Identification (IIM) chapter of the Reference Manual, see Section 7, "Product Documentation."

2 Errata and fix information of the various mask sets can be found in the standard MCIMX31 Chip Errata, see Section 7, "Product Documentation."

3 Changes in output buffer characteristics can be found in the I/O Setting Exceptions and Special Pad Descriptions table in the Reference Manual, see Section 7, "Product Documentation."

4 JTAG functionality is not tested nor guaranteed at -40°C.

5 Case 1581 and 1931 are RoHS compliant, lead-free, MSL = 3, and solders at 260°C.

1.2.1 Feature Differences Between Mask Sets

The following is a summary of differences between silicon Revision 2.0, mask set M91E, and previous revisions of silicon. A complete list of these differences is given in Table 72.

- Extended operating temperature range is available: –40°C to 85°C
- Supply current information changes, as shown in Table 13 and Table 14
- FUSE_VDD supply voltage is floated or grounded during read operation
- No restriction on PLL versus core supply voltage
- Operating frequency as shown in Table 8.

Because of an order from the United States International Trade Commission, BGA-packaged product lines and part numbers indicated here currently are not available from Freescale for import or sale in the United States prior to September 2010: i.MX31 Product Family

Downloaded from Arrow.com.

1.3 Block Diagram

Figure 1 shows the MCIMX31 simplified interface block diagram.

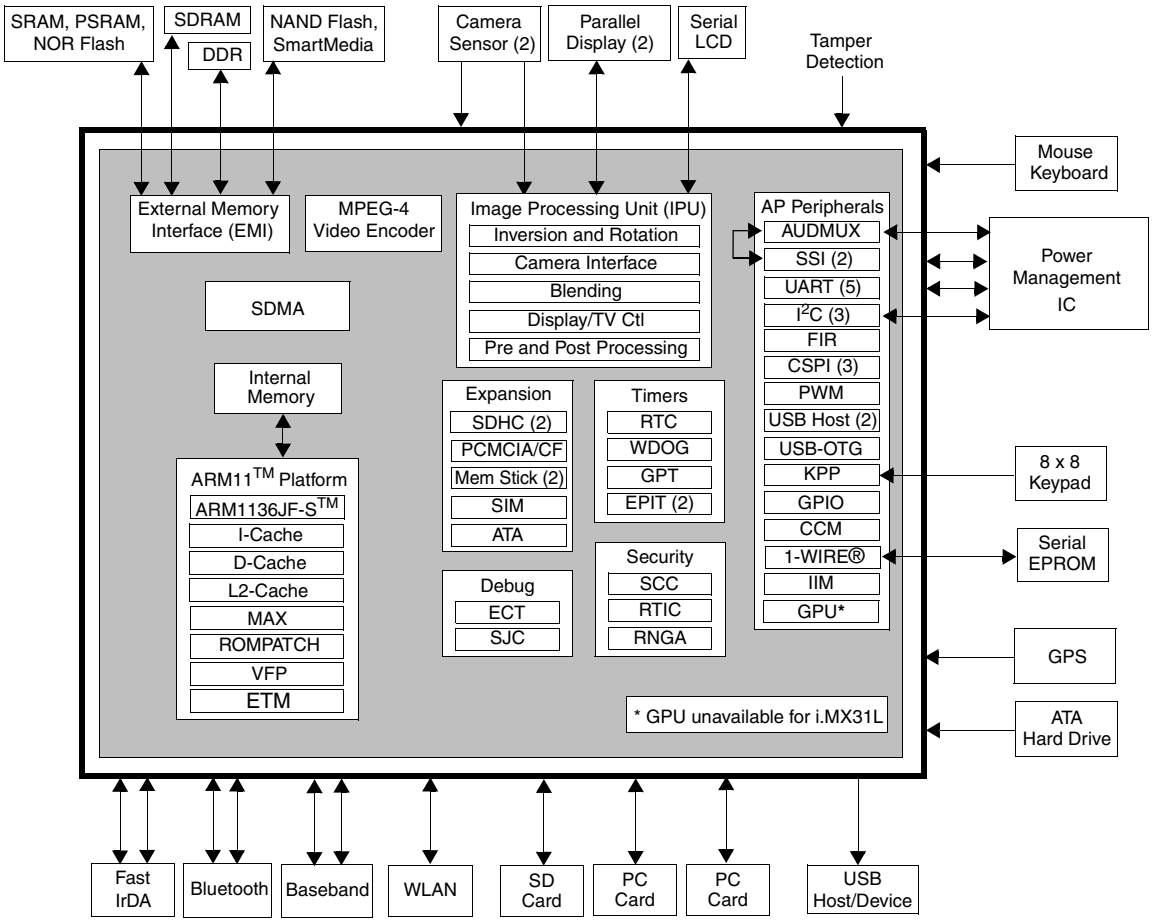

Figure 1. MCIMX31 Simplified Interface Block Diagram

2 Functional Description and Application Information

2.1 ARM11 Microprocessor Core

The CPU of the MCIMX31 is the ARM1136JF-S core based on the ARM v6 architecture. It supports the ARM Thumb® instruction sets, features Jazelle® technology (which enables direct execution of Java byte codes), and a range of SIMD DSP instructions that operate on 16-bit or 8-bit data values in 32-bit registers.

The ARM1136JF-S processor core features:

- Integer unit with integral EmbeddedICE™ logic
- Eight-stage pipeline
- Branch prediction with return stack
- Low-interrupt latency

Because of an order from the United States International Trade Commission, BGA-packaged product lines and part numbers indicated here currently are not available from Freescale for import or sale in the United States prior to September 2010: i.MX31 Product Family

Downloaded from Arrow.com.

- Instruction and data memory management units (MMUs), managed using micro TLB structures backed by a unified main TLB
- Instruction and data L1 caches, including a non-blocking data cache with Hit-Under-Miss
- Virtually indexed/physically addressed L1 caches
- 64-bit interface to both L1 caches
- Write buffer (bypassable)
- High-speed Advanced Micro Bus Architecture (AMBA)™ L2 interface
- Vector Floating Point co-processor (VFP) for 3D graphics and other floating-point applications hardware acceleration
- ETM™ and JTAG-based debug support

2.1.1 Memory System

The ARM1136JF-S complex includes 16 KB Instruction and 16 KB Data L1 caches. It connects to the MCIMX31 L2 unified cache through 64-bit instruction (read-only), 64-bit data read/write (bi-directional), and 64-bit data write interfaces.

The embedded 16K SRAM can be used for audio streaming data to avoid external memory accesses for the low-power audio playback, for security, or for other applications. There is also a 32-KB ROM for bootstrap code and other frequently-used code and data.

A ROM patch module provides the ability to patch the internal ROM. It can also initiate an external boot by overriding the boot reset sequence by a jump to a configurable address.

Table 2 shows information about the MCIMX31 core in tabular form.

Table 2. MCIMX31 Core

Core Acronym	Core Name	Brief Description	Integrated Memory Includes
ARM11 or ARM1136	ARM1136 Platform	The ARM1136™ Platform consists of the ARM1136JF-S core, the ETM real-time debug modules, a 6 x 5 multi-layer AHB crossbar switch (MAX), and a Vector Floating Processor (VFP). The MCIMX31 provides a high-performance ARM11 microprocessor core and highly integrated system functions. The ARM Application Processor (AP) and other subsystems address the needs of the personal, wireless, and portable product market with integrated peripherals, advanced processor core, and power management capabilities.	• 16 Kbyte Instruction Cache • 16 Kbyte Data Cache • 128 Kbyte L2 Cache • 32 Kbyte ROM • 16 Kbyte RAM

Because of an order from the United States International Trade Commission, BGA-packaged product lines and part numbers indicated here currently are not available from Freescale for import or sale in the United States prior to September 2010: i.MX31 Product Family

Downloaded from Arrow.com.

2.2 Module Inventory

Table 3 shows an alphabetical listing of the modules in the multimedia applications processor. For extended descriptions of the modules, see the reference manual. A cross-reference is provided to the electrical specifications and timing information for each module with external signal connections.

Table 3. Digital and Analog Modules

Block Mnemonic	Block Name	Functional Grouping	Brief Description	Section/ Page
1-Wire®	1-Wire Interface	Connectivity Peripheral	The 1-Wire module provides bi-directional communication between the ARM11 core and external 1-Wire devices.	4.3.4/26
ATA	Advanced Technology (AT) Attachment	Connectivity Peripheral	The ATA block is an AT attachment host interface. It is designed to interface with IDE hard disc drives and ATAPI optical disc drives.	4.3.5/27
AUDMUX	Digital Audio Multiplexer	Multimedia Peripheral	The AUDMUX interconnections allow multiple, simultaneous audio/voice/data flows between the ports in point-to-point or point-to-multipoint configurations.	4.3.6/36
CAMP	Clock Amplifier Module	Clock	The CAMP converts a square wave/sinusoidal input into a rail-to-rail square wave. The output of CAMP feeds the predivider.	4.3.3/25
CCM	Clock Control Module	Clock	The CCM provides clock, reset, and power management control for the MCIMX31.	—
CSPI	Configurable Serial Peripheral Interface (x 3)	Connectivity Peripheral	The CSPI is equipped with data FIFOs and is a master/slave configurable serial peripheral interface module, capable of interfacing to both SPI master and slave devices.	4.3.7/36
DPLL	Digital Phase Lock Loop	Clock	The DPLLs produce high-frequency on-chip clocks with low frequency and phase jitters. **Note:** External clock sources provide the reference frequencies.	4.3.8/37
ECT	Embedded Cross Trigger	Debug	The ECT is composed of three CTIs (Cross Trigger Interface) and one CTM (Cross Trigger Matrix—key in the multi-core and multi-peripheral debug strategy.	—
EMI	External Memory Interface	Memory Interface (EMI)	The EMI includes • Multi-Master Memory Interface (M3IF) • Enhanced SDRAM Controller (ESDCTL) • NAND Flash Controller (NFC) • Wireless External Interface Module (WEIM)	— 4.3.9.3/46, 4.3.9.1/38, 4.3.9.2/41
EPIT	Enhanced Periodic Interrupt Timer	Timer Peripheral	The EPIT is a 32-bit “set and forget” timer which starts counting after the EPIT is enabled by software. It is capable of providing precise interrupts at regular intervals with minimal processor intervention.	—
ETM	Embedded Trace Macrocell	Debug/Trace	The ETM (from ARM, Ltd.) supports real-time instruction and data tracing by way of ETM auxiliary I/O port.	4.3.10/54
FIR	Fast InfraRed Interface	Connectivity Peripheral	This FIR is capable of establishing a 0.576 Mbit/s, 1.152 Mbit/s or 4 Mbit/s half duplex link via a LED and IR detector. It supports 0.576 Mbit/s, 1.152 Mbit/s medium infrared (MIR) physical layer protocol and 4Mbit/s fast infrared (FIR) physical layer protocol defined by IrDA, Rev. 1.4.	4.3.11/55

Because of an order from the United States International Trade Commission, BGA-packaged product lines and part numbers indicated here currently are not available from Freescale for import or sale in the United States prior to September 2010: i.MX31 Product Family

Downloaded from Arrow.com.

Table 3. Digital and Analog Modules (continued)

Block Mnemonic	Block Name	Functional Grouping	Brief Description	Section/ Page
Fusebox	Fusebox	ROM	The Fusebox is a ROM that is factory configured by Freescale.	4.3.12/55 See also Table 11
GPIO	General Purpose I/O Module	Pins	The GPIO provides several groups of 32-bit bidirectional, general purpose I/O. This peripheral provides dedicated general-purpose signals that can be configured as either inputs or outputs.	—
GPT	General Purpose Timer	Timer Peripheral	The GPT is a multipurpose module used to measure intervals or generate periodic output.	—
GPU	Graphics Processing Unit	Multimedia Peripheral	The GPU provides hardware acceleration for 2D and 3D graphics algorithms.	—
I^2C	Inter IC Communication	Connectivity Peripheral	The I^2C provides serial interface for controlling the Sensor Interface and other external devices. Data rates of up to 100 Kbits/s are supported.	4.3.13/56
IIM	IC Identification Module	ID	The IIM provides an interface for reading device identification.	—
IPU	Image Processing Unit	Multimedia Peripheral	The IPU processes video and graphics functions in the MCIMX31 and interfaces to video, still image sensors, and displays.	4.3.14/57, 4.3.15/59
KPP	Keypad Port	Connectivity Peripheral	The KPP is used for keypad matrix scanning or as a general purpose I/O. This peripheral simplifies the software task of scanning a keypad matrix.	—
MPEG-4	MPEG-4 Video Encoder	Multimedia Peripherals	The MPEG-4 encoder accelerates video compression, following the MPEG-4 standard	—
MSHC	Memory Stick Host Controller	Connectivity Peripheral	The MSHC is placed in between the AIPS and the customer memory stick to support data transfer from the MCIMX31 to the customer memory stick.	4.3.16/84
PADIO	Pads I/O	Buffers and Drivers	The PADIO serves as the interface between the internal modules and the device's external connections.	4.3.1/22
PCMCIA	PCM	Connectivity Peripheral	The PCMCIA Host Adapter provides the control logic for PCMCIA socket interfaces.	4.3.17/86
PWM	Pulse-Width Modulator	Timer Peripheral	The PWM has a 16-bit counter and is optimized to generate sound from stored sample audio images. It can also generate tones.	4.3.18/88
RNGA	Random Number Generator Accelerator	Security	The RNGA module is a digital integrated circuit capable of generating 32-bit random numbers. It is designed to comply with FIPS-140 standards for randomness and non-determinism.	—
RTC	Real Time Clock	Timer Peripheral	The RTC module provides a current stamp of seconds, minutes, hours, and days. Alarm and timer functions are also available for programming. The RTC supports dates from the year 1980 to 2050.	—
RTIC	Run-Time Integrity Checkers	Security	The RTIC ensures the integrity of the peripheral memory contents and assists with boot authentication.	—

Because of an order from the United States International Trade Commission, BGA-packaged product lines and part numbers indicated here currently are not available from Freescale for import or sale in the United States prior to September 2010: i.MX31 Product Family

Downloaded from Arrow.com.

Table 3. Digital and Analog Modules (continued)

Block Mnemonic	Block Name	Functional Grouping	Brief Description	Section/ Page
SCC	Security Controller Module	Security	The SCC is a hardware component composed of two blocks—the Secure RAM module, and the Security Monitor. The Secure RAM provides a way of securely storing sensitive information.	—
SDHC	Secured Digital Host Controller	Connectivity Peripheral	The SDHC controls the MMC (MultiMediaCard), SD (Secure Digital) memory, and I/O cards by sending commands to cards and performing data accesses to and from the cards.	4.3.19/89
SDMA	Smart Direct Memory Access	System Control Peripheral	The SDMA controller maximizes the system's performance by relieving the ARM core of the task of bulk data transfer from memory to memory or between memory and on-chip peripherals.	—
SIM	Subscriber Identification Module	Connectivity Peripheral	The SIM interfaces to an external Subscriber Identification Card. It is an asynchronous serial interface adapted for Smart Card communication for e-commerce applications.	4.3.20/90
SJC	Secure JTAG Controller	Debug	The SJC provides debug and test control with maximum security and provides a flexible architecture for future derivatives or future multi-cores architecture.	4.3.21/94
SSI	Synchronous Serial Interface	Multimedia Peripheral	The SSI is a full-duplex, serial port that allows the device to communicate with a variety of serial devices, such as standard codecs, Digital Signal Processors (DSPs), microprocessors, peripherals, and popular industry audio codecs that implement the inter-IC sound bus standard (I2S) and Intel AC97 standard.	4.3.22/96
UART	Universal Asynchronous Receiver/Trans mitter	Connectivity Peripheral	The UART provides serial communication capability with external devices through an RS-232 cable or through use of external circuitry that converts infrared signals to electrical signals (for reception) or transforms electrical signals to signals that drive an infrared LED (for transmission) to provide low speed IrDA compatibility.	—
USB	Universal Serial Bus— 2 Host Controllers and 1 OTG (On-The-Go)	Connectivity Peripherals	• USB Host 1 is designed to support transceiverless connection to the on-board peripherals in Low Speed and Full Speed mode, and connection to the ULPI (UTMI+ Low-Pin Count) and Legacy Full Speed transceivers. • USB Host 2 is designed to support transceiverless connection to the Cellular Modem Baseband Processor. • The USB-OTG controller offers HS/FS/LS capabilities in Host mode and HS/FS in device mode. In Host mode, the controller supports direct connection of a FS/LS device (without external hub). In device (bypass) mode, the OTG port functions as gateway between the Host 1 Port and the OTG transceiver.	4.3.23/104
WDOG	Watchdog Timer Module	Timer Peripheral	The WDOG module protects against system failures by providing a method for the system to recover from unexpected events or programming errors.	—

Because of an order from the United States International Trade Commission, BGA-packaged product lines and part numbers indicated here currently are not available from Freescale for import or sale in the United States prior to September 2010: i.MX31 Product Family

Downloaded from Arrow.com.

3 Signal Descriptions

Signal descriptions are in the reference manual. Special signal considerations are listed following this paragraph. The BGA ball assignment is in Section 5, "Package Information and Pinout."

Special Signal Considerations:

- **Tamper detect (GPIO1_6)**

  Tamper detect logic is used to issue a security violation. This logic is activated if the tamper detect input is asserted.

  The tamper detect logic is disabled after reset. After enabling the logic, it is impossible to disable it until the next reset. The GPR[16] bit functions as the tamper detect enable bit.

  GPIO1_6 functions similarly to other I/O with GPIO capabilities regardless of the status of the tamper detect enable bit. (For example, the GPIO1_6 can function as an input with GPIO capabilities, such as sampling through PSR or generating interrupts.)

- **Power ready (GPIO1_5)**

  The power ready input, GPIO1_5, should be connected to an external power management IC power ready output signal. If not used, GPIO1_5 must either be (a) externally pulled-up to NVCC1 or (b) a no connect, internally pulled-up by enabling the on-chip pull-up resistor. GPIO1_5 is a dedicated input and cannot be used as a general-purpose input/output.

- **SJC_MOD**

  SJC_MOD must be externally connected to GND for normal operation. Termination to GND through an external pull-down resistor (such as 1 kΩ) is allowed, but the value should be much smaller than the on-chip 100 kΩ pull-up.

- **CE_CONTROL**

  CE_CONTROL is a reserved input and must be externally tied to GND through a 1 kΩ resistor.

- **TTM_PAD**

  TTM_PAD is for Freescale factory use only. Control bits indicate pull-up/down disabled. However, TTM_PAD is actually connected to an on-chip pull-down device. Users must either float this signal or tie it to GND.

- **M_REQUEST and M_GRANT**

  These two signals are not utilized internally. The user should make no connection to these signals.

- **Clock Source Select (CLKSS)**

  The CLKSS is the input that selects the default reference clock source providing input to the DPLL. To select CKIH, tie CLKSS to NVCC1. To select CKIL, tie CLKSS to ground. After initialization, the reference clock source can be changed (initial setting is overwritten) by programming the PRCS bits in the CCMR.

Because of an order from the United States International Trade Commission, BGA-packaged product lines and part numbers indicated here currently are not available from Freescale for import or sale in the United States prior to September 2010: i.MX31 Product Family

Downloaded from Arrow.com.

4 Electrical Characteristics

This section provides the device-level and module-level electrical characteristics for the MCIMX31.

4.1 Chip-Level Conditions

This section provides the device-level electrical characteristics for the IC. See Table 4 for a quick reference to the individual tables and sections.

Table 4. MCIMX31 Chip-Level Conditions

For these characteristics, …	Topic appears …
Table 5, "Absolute Maximum Ratings"	on page 10
Table 7, "Thermal Resistance Data—19 × 19 mm Package"	on page 11
Table 8, "Operating Ranges"	on page 13
Table 9, "Specific Operating Ranges for Silicon Revision 2.0"	on page 14
Table 10, "Interface Frequency"	on page 14
Section 4.1.1, "Supply Current Specifications"	on page 16
Section 4.2, "Supply Power-Up/Power-Down Requirements and Restrictions"	on page 19

CAUTION

Stresses beyond those listed under Table 5 may cause permanent damage to the device. These are stress ratings only. Functional operation of the device at these or any other conditions beyond those indicated under Table 8, "Operating Ranges," on page 13 is not implied. Exposure to absolute-maximum-rated conditions for extended periods may affect device reliability.

Table 5. Absolute Maximum Ratings

Parameter	Symbol	Min	Max	Units
Supply Voltage (Core)	$QVCC_{max}$	–0.5	1.65	V
Supply Voltage (I/O)	$NVCC_{max}$	–0.5	3.3	V
Input Voltage Range	V_{Imax}	–0.5	NVCC +0.3	V
Storage Temperature	$T_{storage}$	–40	125	°C
ESD Damage Immunity:				
Human Body Model (HBM)	V_{esd}	—	1500	V
Machine Model (MM)		—	200	
Charge Device Model (CDM)		—	500	
Offset voltage allowed in run mode between core supplies.	V_{core_offset}[1]	—	15	mV

[1] The offset is the difference between all core voltage pair combinations of QVCC, QVCC1, and QVCC4.

Because of an order from the United States International Trade Commission, BGA-packaged product lines and part numbers indicated here currently are not available from Freescale for import or sale in the United States prior to September 2010: i.MX31 Product Family

Downloaded from Arrow.com.

Table 6 provides the thermal resistance data for the 14 × 14 mm, 0.5 mm pitch package.

Table 6. Thermal Resistance Data—14 × 14 mm Package

Rating	Board	Symbol	Value	Unit	Notes
Junction to Ambient (natural convection)	Single layer board (1s)	$R_{\theta JA}$	56	°C/W	1, 2, 3
Junction to Ambient (natural convection)	Four layer board (2s2p)	$R_{\theta JA}$	30	°C/W	1, 3
Junction to Ambient (@200 ft/min)	Single layer board (1s)	$R_{\theta JMA}$	46	°C/W	1, 2, 3
Junction to Ambient (@200 ft/min)	Four layer board (2s2p)	$R_{\theta JMA}$	26	°C/W	1, 3
Junction to Board	—	$R_{\theta JB}$	17	°C/W	1, 4
Junction to Case	—	$R_{\theta JC}$	10	°C/W	1, 5
Junction to Package Top (natural convection)	—	Ψ_{JT}	2	°C/W	1, 6

NOTES

1. Junction temperature is a function of die size, on-chip power dissipation, package thermal resistance, mounting site (board) temperature, ambient temperature, air flow, power dissipation of other components on the board, and board thermal resistance.
2. Per JEDEC JESD51-2 with the single layer board horizontal. Board meets JESD51-9 specification.
3. Per JEDEC JESD51-6 with the board horizontal.
4. Thermal resistance between the die and the printed circuit board per JEDEC JESD51-8. Board temperature is measured on the top surface of the board near the package.
5. Thermal resistance between the die and the case top surface as measured by the cold plate method (MIL SPEC-883 Method 1012.1).
6. Thermal characterization parameter indicating the temperature difference between package top and the junction temperature per JEDEC JESD51-2. When Greek letters are not available, the thermal characterization parameter is written as Psi-JT.

Table 7 provides the thermal resistance data for the 19 × 19 mm, 0.8 mm pitch package.

Table 7. Thermal Resistance Data—19 × 19 mm Package

Rating	Board	Symbol	Value	Unit	Notes
Junction to Ambient (natural convection)	Single layer board (1s)	$R_{\theta JA}$	46	°C/W	1, 2, 3
Junction to Ambient (natural convection)	Four layer board (2s2p)	$R_{\theta JA}$	29	°C/W	1, 2, 3
Junction to Ambient (@200 ft/min)	Single layer board (1s)	$R_{\theta JMA}$	38	°C/W	1, 2, 3
Junction to Ambient (@200 ft/min)	Four layer board (2s2p)	$R_{\theta JMA}$	25	°C/W	1, 2, 3
Junction to Board	—	$R_{\theta JB}$	19	°C/W	1, 3
Junction to Case (Top)	—	$R_{\theta JCtop}$	10	°C/W	1, 4
Junction to Package Top (natural convection)	—	Ψ_{JT}	2	°C/W	1, 5

Because of an order from the United States International Trade Commission, BGA-packaged product lines and part numbers indicated here currently are not available from Freescale for import or sale in the United States prior to September 2010: i.MX31 Product Family

Downloaded from Arrow.com.

NOTES

1. Junction temperature is a function of die size, on-chip power dissipation, package thermal resistance, mounting site (board) temperature, ambient temperature, air flow, power dissipation of other components on the board, and board thermal resistance.
2. Junction-to-Ambient Thermal Resistance determined per JEDEC JESD51-3 and JESD51-6. Thermal test board meets JEDEC specification for this package.
3. Junction-to-Board thermal resistance determined per JEDEC JESD51-8. Thermal test board meets JEDEC specification for the specified package.
4. Junction-to-Case at the top of the package determined using MIL-STD 883 Method 1012.1. The cold plate temperature is used for the case temperature. Reported value includes the thermal resistance of the interface layer.
5. Thermal characterization parameter indicating the temperature difference between the package top and the junction temperature per JEDEC JESD51-2. When Greek letters are not available, the thermal characterization parameter is written as Psi-JT.

Because of an order from the United States International Trade Commission, BGA-packaged product lines and part numbers indicated here currently are not available from Freescale for import or sale in the United States prior to September 2010: i.MX31 Product Family

Downloaded from Arrow.com.

Table 8 provides the operating ranges.

NOTE

The term NVCC in this section refers to the associated supply rail of an input or output. The association is shown in the Signal Multiplexing chapter of the reference manual.

CAUTION

NVCC6 and NVCC9 must be at the same voltage potential. These supplies are connected together on-chip to optimize ESD damage immunity.

Table 8. Operating Ranges

Symbol	Parameter	Min	Max	Units
QVCC, QVCC1, QVCC4	Core Operating Voltage[1,2,3] Silicon rev 1.15, 1.2, and 2.0 — $0 \le f_{ARM} \le 400$ MHz, non-overdrive $0 \le f_{ARM} \le 400$ MHz, overdrive[4] $0 \le f_{ARM} \le 532$ MHz, overdrive[4]	 1.22 >1.47 1.55	 1.47 1.65 1.65	V
	State Retention Voltage[5]	0.95	—	
NVCC1, NVCC3–10	I/O Supply Voltage, except DDR[6] non-overdrive overdrive[7]	1.75 >3.1	3.1 3.3	V
NVCC2, NVCC21, NVCC22	I/O Supply Voltage, DDR only	1.75	1.95	V
FVCC, MVCC, SVCC, UVCC	PLL (Phase-Locked Loop) and FPM (Frequency Pre-multiplier) Supply Voltage[8] non-overdrive overdrive[4]	 1.3 >1.47	 1.47 1.6	V
IOQVDD	On-device Level Shifter Supply Voltage	1.6	1.9	V
FUSE_VDD	Fusebox read Supply Voltage[9, 10]	1.65	1.95	V
	Fusebox write (program) Supply Voltage[11]	3.0	3.3	V
T_A	Operating Ambient Temperature Range[12]	0	70	°C

1 Measured at package balls, including peripherals, ARM, and L2 cache supplies (QVCC, QVCC1, QVCC4, respectively).

2 The core voltage must be higher than 1.38V to avoid corrupted data during transfers from the USB HS. Please refer to Errata file ENGcm02610 ID.

3 If the Core voltage is supplied by the MC13738, it will be 1.6 ± 0.05 V during the power-up sequence. This is allowed. After power-up the voltage should be reduced to avoid operation in overdrive mode.

4 Supply voltage is considered “overdrive” for voltages above 1.47 V. Operation time in overdrive—whether switching or not—must be limited to a cumulative duration of 1.25 years (10,950 hours) or less to sustain the maximum operating voltage without significant device degradation—for example, 25% (average 6 hours out of 24 yours per day) duty cycle for 5-year rated equipment. To tolerate the maximum operating overdrive voltage for 10 years, the device must have a duty cycle of 12.5% or less in overdrive (for example 3 out of 24 hours per day). Below 1.47V, duty cycle restrictions may apply for equipment rated above 5 years.

5 The SR voltage is applied to QVCC, QVCC1, and QVCC4 after the device is placed in SR mode. The Real-Time Clock (RTC) is operational in State Retention (SR) mode.

6 Overshoot and undershoot conditions (transitions above NVCC and below GND) on I/O must be held below 0.6 V, and the duration of the overshoot/undershoot must not exceed 10% of the system clock cycle. Overshoot/undershoot must be controlled through printed circuit board layout, transmission line impedance matching, signal line termination, or other methods. Non-compliance to this specification may affect device reliability or cause permanent damage to the device.

Because of an order from the United States International Trade Commission, BGA-packaged product lines and part numbers indicated here currently are not available from Freescale for import or sale in the United States prior to September 2010: i.MX31 Product Family

Downloaded from Arrow.com.

[7] Supply voltage is considered “overdrive” for voltages above 3.1 V. Operation time in overdrive—whether switching or not—must be limited to a cumulative duration of 1 year (8,760 hours) or less to sustain the maximum operating voltage without significant device degradation—for example, 20% (average 4.8 hours out of 24 hours per day) duty cycle for 5-year rated equipment. Operation at 3.3 V that exceeds a cumulative 3,504 hours may cause non-operation whenever supply voltage is reduced to 1.8 V; degradation may render the device too slow or inoperable. Below 3.1 V, duty cycle restrictions may apply for equipment rated above 5 years.

[8] For normal operating conditions, PLLs’ and core supplies must maintain the following relation: PLL ≥ Core – 100 mV. In other words, for a 1.6 V core supply, PLL supplies must be set to 1.5 V or higher. This restriction is no longer necessary on mask set M91E. PLL supplies may be set independently of core supply. PLL voltage must not be altered after power up, otherwise the PLL will be unstable and lose lock. To minimize inducing noise on the PLL supply line, source the voltage from a low-noise, dedicated supply. PLL parameters in Table 31, "DPLL Specifications," on page 37, are guaranteed over the entire specified voltage range.

[9] Fusebox read supply voltage applies to silicon Revisions 1.2 and previous.

[10] In read mode, FUSE_VDD can be floated or grounded for mask set M91E (silicon Revision 2.0).

[11] Fuses might be inadvertently blown if written to while the voltage is below this minimum.

[12] The temperature range given is for the consumer version. Please refer to Table 1 for extended temperature range offerings and the associated part numbers.

Table 9. Specific Operating Ranges for Silicon Revision 2.0

Symbol	Parameter	Min	Max	Units
FUSE_VDD	Fusebox read Supply Voltage[1]	—	—	V
	Fusebox write (program) Supply Voltage[2]	3.0	3.3	V

[1] In read mode, FUSE_VDD should be floated or grounded.

[2] Fuses might be inadvertently blown if written to while the voltage is below the minimum.

Table 10 provides information for interface frequency limits. For more details about clocks characteristics, see Section 4.3.8, “DPLL Electrical Specifications,” and Section 4.3.3, “Clock Amplifier Module (CAMP) Electrical Characteristics.”

Table 10. Interface Frequency

ID	Parameter	Symbol	Min	Typ	Max	Units
1	JTAG TCK Frequency	f_{JTAG}	DC	5	10	MHz
2	CKIL Frequency[1]	f_{CKIL}	32	32.768	38.4	kHz
3	CKIH Frequency[2]	f_{CKIH}	15	26	75	MHz

[1] CKIL must be driven by an external clock source to ensure proper start-up and operation of the device. CKIL is needed to clock the internal reset synchronizer, the watchdog, and the real-time clock.

[2] DPTC functionality, specifically the voltage/frequency relation table, is dependent on CKIH frequency. At the time of publication, standard tables used by Freescale OSs provided for a CKIH frequency of 26 MHz only. Any deviation from this frequency requires an update to the OS. For more details, refer to the particular OS user's guide documentation.

Table 11 shows the fusebox supply current parameters.

Because of an order from the United States International Trade Commission, BGA-packaged product lines and part numbers indicated here currently are not available from Freescale for import or sale in the United States prior to September 2010: i.MX31 Product Family

Downloaded from Arrow.com.

Table 11. Fusebox Supply Current Parameters

Ref. Num	Description	Symbol	Minimum	Typical	Maximum	Units
1	eFuse Program Current.[1] Current to program one eFuse bit: efuse_pgm = 3.0 V	$I_{program}$	—	35	60	mA
2	eFuse Read Current[2] Current to read an 8-bit eFuse word vdd_fusebox = 1.875 V	I_{read}	—	5	8	mA

[1] The current $I_{program}$ is during program time ($t_{program}$).

[2] The current I_{read} is present for approximately 50 ns of the read access to the 8-bit word, and only applies to Silicon Rev. 1.2 and previous.

Because of an order from the United States International Trade Commission, BGA-packaged product lines and part numbers indicated here currently are not available from Freescale for import or sale in the United States prior to September 2010: i.MX31 Product Family

Downloaded from Arrow.com.

4.1.1 Supply Current Specifications

Table 12 shows the core current consumption for 0°C to 70°C for Silicon Revision 1.2 and previous for the MCIMX31.

Table 12. Current Consumption for 0°C to 70°C[1, 2] for Silicon Revision 1.2 and Previous

Mode	Conditions	QVCC (Peripheral)		QVCC1 (ARM)		QVCC4 (L2)		FVCC + MVCC + SVCC + UVCC (PLL)		Unit
		Typ	Max	Typ	Max	Typ	Max	Typ	Max	
State Retention	• QVCC and QVCC1 = 0.95 V • L2 caches are power gated (QVCC4 = 0 V) • All PLLs are off, VCC = 1.4 V • ARM is in well bias • FPM is off • 32 kHz input is on • CKIH input is off • CAMP is off • TCK input is off • All modules are off • No external resistive loads • RNGA oscillator is off	0.80	—	0.50	—	—	—	0.04	—	mA
Wait	• QVCC,QVCC1, and QVCC4 = 1.22 V • ARM is in wait for interrupt mode • MAX is active • L2 cache is stopped but powered • MCU PLL is on (532 MHz), VCC = 1.4 V • USB PLL and SPLL are off, VCC = 1.4 V • FPM is on • CKIH input is on • CAMP is on • 32 kHz input is on • All clocks are gated off • All modules are off (by programming CGR[2:0] registers) • RNGA oscillator is off • No external resistive loads	6.00	—	3.00	—	0.04	—	3.50	—	mA

1 Typical column: TA = 25°C

2 Maximum column: TA = 70°C

Because of an order from the United States International Trade Commission, BGA-packaged product lines and part numbers indicated here currently are not available from Freescale for import or sale in the United States prior to September 2010: i.MX31 Product Family

Downloaded from Arrow.com.

Table 13 shows the core current consumption for –40°C to 85°C for Silicon Revision 2.0 for the MCIMX31.

Table 13. Current Consumption for –40°C to 85°C[1, 2] for Silicon Revision 2.0

Mode	Conditions	QVCC (Peripheral)		QVCC1 (ARM)		QVCC4 (L2)		FVCC + MVCC + SVCC + UVCC (PLL)		Unit
		Typ	Max	Typ	Max	Typ	Max	Typ	Max	
Deep Sleep	• QVCC = 0.95 V • ARM and L2 caches are power gated (QVCC1 = QVCC4 = 0 V) • All PLLs are off, VCC = 1.4 V • ARM is in well bias • FPM is off • 32 kHz input is on • CKIH input is off • CAMP is off • TCK input is off • All modules are off • No external resistive loads • RNGA oscillator is off	0.16	5.50	—	—	—	—	0.02	0.10	mA
State Retention	• QVCC and QVCC1 = 0.95 V • L2 caches are power gated (QVCC4 = 0 V) • All PLLs are off, VCC = 1.4 V • ARM is in well bias • FPM is off • 32 kHz input is on • CKIH input is off • CAMP is off • TCK input is off • All modules are off • No external resistive loads • RNGA oscillator is off	0.16	5.50	0.07	2.20	—	—	0.02	0.10	mA
Wait	• QVCC, QVCC1, and QVCC4 = 1.22 V • ARM is in wait for interrupt mode • MAX is active • L2 cache is stopped but powered • MCU PLL is on (532 MHz), VCC = 1.4 V • USB PLL and SPLL are off, VCC = 1.4 V • FPM is on • CKIH input is on • CAMP is on • 32 kHz input is on • All clocks are gated off • All modules are off (by programming CGR[2:0] registers) • RNGA oscillator is off • No external resistive loads	6.00	15.00	2.20	25.00	0.03	0.29	3.60	4.40	mA

1 Typical column: TA = 25°C

2 Maximum column: TA = 85°C

Because of an order from the United States International Trade Commission, BGA-packaged product lines and part numbers indicated here currently are not available from Freescale for import or sale in the United States prior to September 2010: i.MX31 Product Family

Downloaded from Arrow.com.

Table 14 shows the core current consumption for 0°C to 70°C for Silicon Revision 2.0 for the MCIMX31.

Table 14. Current Consumption for 0°C to 70°C[1, 2] for Silicon Revision 2.0

Mode	Conditions	QVCC (Peripheral)		QVCC1 (ARM)		QVCC4 (L2)		FVCC, +MVCC, +SVCC, +UVCC (PLL)		Unit
		Typ	Max	Typ	Max	Typ	Max	Typ	Max	
Deep Sleep	• QVCC = 0.95 V • ARM and L2 caches are power gated (QVCC1 2= QVCC4 = 0 V) • All PLLs are off, VCC = 1.4 V • ARM is in well bias • FPM is off • 32 kHz input is on • CKIH input is off • CAMP is off • TCK input is off • All modules are off • No external resistive loads • RNGA oscillator is off	0.16	2.50	—	—	—	—	0.02	0.10	mA
State Retention	• QVCC and QVCC1 = 0.95 V • L2 caches are power gated (QVCC4 = 0 V) • All PLLs are off, VCC = 1.4 V • ARM is in well bias • FPM is off • 32 kHz input is on • CKIH input is off • CAMP is off • TCK input is off • All modules are off • No external resistive loads • RNGA oscillator is off	0.16	2.50	0.07	1.60	—	—	0.02	0.10	mA
Wait	• QVCC,QVCC1, and QVCC4 = 1.22 V • ARM is in wait for interrupt mode • MAX is active • L2 cache is stopped but powered • MCU PLL is on (532 MHz), VCC = 1.4 V • USB PLL and SPLL are off, VCC = 1.4 V • FPM is on • CKIH input is on • CAMP is on • 32 kHz input is on • All clocks are gated off • All modules are off (by programming CGR[2:0] registers) • RNGA oscillator is off • No external resistive loads	6.00	13.00	2.20	16.00	0.03	0.17	3.60	4.40	mA

1 Typical column: TA = 25°C

2 Maximum column: TA = 70°C

Because of an order from the United States International Trade Commission, BGA-packaged product lines and part numbers indicated here currently are not available from Freescale for import or sale in the United States prior to September 2010: i.MX31 Product Family

Downloaded from Arrow.com.

4.2 Supply Power-Up/Power-Down Requirements and Restrictions

Any MCIMX31 board design must comply with the power-up and power-down sequence guidelines as described in this section to guarantee reliable operation of the device. Any deviation from these sequences may result in any or all of the following situations:

- Cause excessive current during power up phase
- Prevent the device from booting
- Cause irreversible damage to the MCIMX31 (worst-case scenario)

4.2.1 Powering Up

The Power On Reset ($\overline{\text{POR}}$) pin must be kept asserted (low) throughout the power up sequence. Power up logic must guarantee that all power sources reach their target values prior to the release (de-assertion) of $\overline{\text{POR}}$. Figure 2 shows the power-up sequence for silicon Revisions 1.2 and previous. Figure 3 and Figure 4 show the power-up sequence for silicon Revision 2.0.

NOTE

Stages need to be performed in the order shown; however, *within* each stage, supplies can be powered up in any order. For example, supplies IOQVDD, NVCC1, and NVCC3 through NVCC10 do not need to be powered up in the order shown.

CAUTION

NVCC6 and NVCC9 must be at the same voltage potential. These supplies are connected together on-chip to optimize ESD damage immunity.

Because of an order from the United States International Trade Commission, BGA-packaged product lines and part numbers indicated here currently are not available from Freescale for import or sale in the United States prior to September 2010: i.MX31 Product Family

Downloaded from Arrow.com.

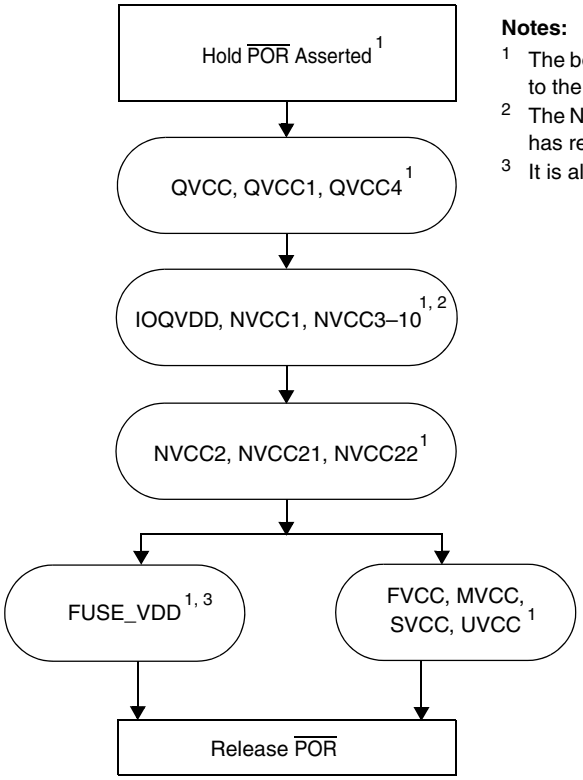

Notes:

1 The board design must guarantee that supplies reach 90% level before transition to the next state, using Power Management IC or other means.

2 The NVCC1 supply must not precede IOQVDD by more than 0.2 V until IOQVDD has reached 1.5 V. If IOQVDD is powered up first, there are no restrictions.

3 It is allowable for FVCC, MVCC, SVCC, and UVCC to be up after FUSE_VDD.

Figure 2. Power-Up Sequence for Silicon Revisions 1.2 and Previous

4.2.1.1 Power-Up Sequence for Silicon Revision 2

Silicon revision 2.0 offers two options for power-up sequencing. Option 1 is backwards compatible with silicon revision 1.2 and earlier versions of the IC. It should be noted that using option 1 on silicon Rev. 2.0 introduces a slight increase in current drain on IOQVDD when IOQVDD is raised before NVCC21. The expected resulting increase is in the range of 3 mA to 5 mA, which does not pose a risk to the IC.

Option 2 is an alternative power-up sequence that allows the powering up of NVCC2, NVCC21, NVCC22 with IOQVDD, NVCC1, and NVCC3-10 without producing a current drain increase on IOQVDD.

These two power-up options on the 2.0 silicon allow the user to select the optimum power-up sequence for their application.

Because of an order from the United States International Trade Commission, BGA-packaged product lines and part numbers indicated here currently are not available from Freescale for import or sale in the United States prior to September 2010: i.MX31 Product Family

Downloaded from Arrow.com.

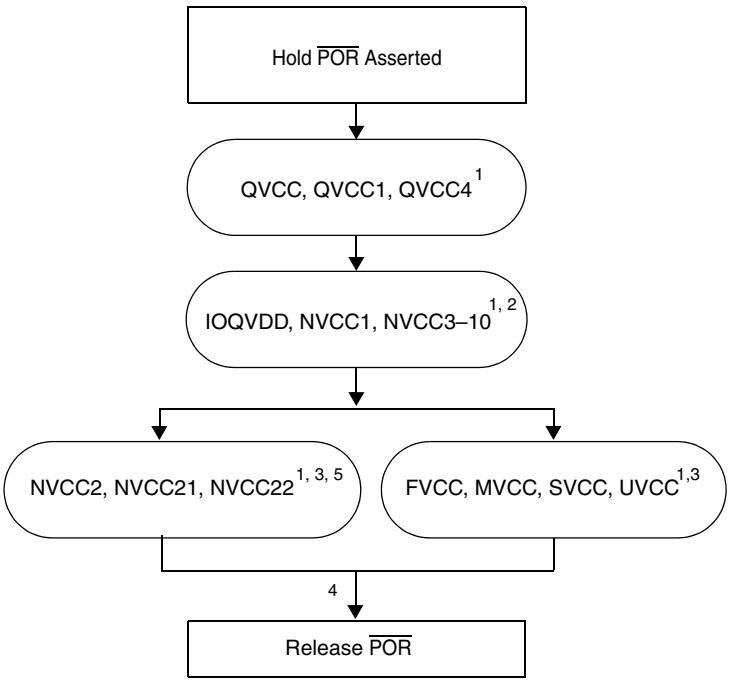

Notes:

1 The board design must guarantee that supplies reach 90% level before transition to the next state, using Power Management IC or other means.

2 The NVCC1 supply must not precede IOQVDD by more than 0.2 V until IOQVDD has reached 1.5 V. If IOQVDD is powered up first, there are no restrictions.

3 The parallel paths in the flow indicate that supply group NVCC2, NVCC21, and NVCC22, and supply group FVCC, MVCC, SVCC, and UVCC ramp-ups are independent. Note that this power-up sequence is backward compatible to Silicon Revs. 1.15 and 1.2, because NVCC2x ramp-up proceeding PLL supplies is allowed.

4 Unlike the power-up sequence for Silicon Revision 1.2, FUSE_VDD should not be driven on power-up for Silicon Revision 2.0. This supply is dedicated for fuse burning (programming), and should not be driven upon boot-up.

5 Raising IOQVDD before NVCC21 produces a slight increase in current drain on IOQVDD of approximately 3–5 mA. The current increase will not damage the IC. Refer to Errata ID TLSbo91750 for details.

Figure 3. Option 1 Power-Up Sequence (Silicon Revision 2.0)

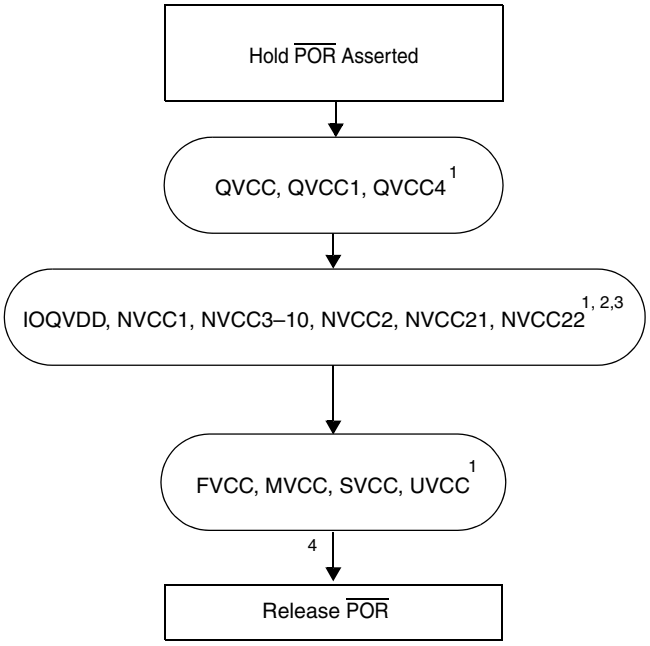

Notes:

1 The board design must guarantee that supplies reach 90% level before transition to the next state, using Power Management IC or other means.

2 The NVCC1 supply must not precede IOQVDD by more than 0.2 V until IOQVDD has reached 1.5 V. If IOQVDD is powered up first, there are no restrictions.

3 Raising NVCC2, NVCC21, and NVCC22 at the same time as IOQVDD does not produce the slight increase in current drain on IOQVDD (as described in Figure 3, Note 5).

4 Unlike the power-up sequence for Silicon Revision 1.2, FUSE_VDD should not be driven on power-up for Silicon Revision 2.0. This supply is dedicated for fuse burning (programming), and should not be driven upon boot-up.

Figure 4. Option 2 Power-Up Sequence (Silicon Revision 2.0)

Because of an order from the United States International Trade Commission, BGA-packaged product lines and part numbers indicated here currently are not available from Freescale for import or sale in the United States prior to September 2010: i.MX31 Product Family

Downloaded from Arrow.com.

4.2.2 Powering Down

The power-down sequence prior to silicon Revision 2.0 should be completed as follows:

1. Lower the FUSE_VDD supply (when in write mode).
2. Lower the remaining supplies.

For silicon revisions beginning with Revision 2.0 there is no special requirements for power down sequence.

4.3 Module-Level Electrical Specifications

This section contains the MCIMX31 electrical information including timing specifications, arranged in alphabetical order by module name.

4.3.1 I/O Pad (PADIO) Electrical Specifications

This section specifies the AC/DC characterization of functional I/O of the MCIMX31. There are two main types of I/O: regular and DDR. In this document, the “Regular” type is referred to as GPIO.

4.3.1.1 DC Electrical Characteristics

The MCIMX31 I/O parameters appear in Table 15 for GPIO. See Table 8 for temperature and supply voltage ranges.

NOTE

The term NVCC in this section refers to the associated supply rail of an input or output. The association is shown in the Signal Multiplexing chapter of the reference manual. NVCC for Table 15 refers to NVCC1 and NVCC3–10; QVCC refers to QVCC, QVCC1, and QVCC4.

Table 15. GPIO DC Electrical Parameters

Parameter	Symbol	Test Conditions	Min	Typ	Max	Units
High-level output voltage	V_{OH}	I_{OH} = –1 mA	NVCC –0.15	—	—	V
		I_{OH} = specified Drive	0.8*NVCC	—	—	V
Low-level output voltage	V_{OL}	I_{OL} = 1 mA	—	—	0.15	V
		I_{OL} = specified Drive	—	—	0.2*NVCC	V
High-level output current, slow slew rate	I_{OH_S}	V_{OH}=0.8*NVCC Std Drive High Drive Max Drive	 –2 –4 –8	—	—	mA
High-level output current, fast slew rate	I_{OH_F}	V_{OH}=0.8*NVCC Std Drive High Drive Max Drive	 –4 –6 –8	—	—	mA

Because of an order from the United States International Trade Commission, BGA-packaged product lines and part numbers indicated here currently are not available from Freescale for import or sale in the United States prior to September 2010: i.MX31 Product Family

Downloaded from Arrow.com.

Table 15. GPIO DC Electrical Parameters (continued)

Parameter	Symbol	Test Conditions	Min	Typ	Max	Units
Low-level output current, slow slew rate	I_{OL_S}	V_{OL}=0.2*NVCC Std Drive High Drive Max Drive	 2 4 8	—	—	mA
Low-level output current, fast slew rate	I_{OL_F}	V_{OL}=0.2*NVCC Std Drive High Drive Max Drive	 4 6 8	—	—	mA
High-Level DC input voltage	V_{IH}	—	0.7*NVCC	—	NVCC	V
Low-Level DC input voltage	V_{IL}	—	0	—	0.3*QVCC	V
Input Hysteresis	V_{HYS}	Hysteresis enabled	0.25	—	—	V
Schmitt trigger VT+	V_T +	Hysteresis enabled	0.5*QVCC	—	—	V
Schmitt trigger VT–	V_T –	Hysteresis enabled	—	—	0.5*QVCC	V
Pull-up resistor (100 kΩ PU)	R_{PU}	—	—	100	—	kΩ
Pull-down resistor (100 kΩ PD)	R_{PD}	—	—	100	—	
Input current (no PU/PD)	I_{IN}	V_I = NVCC or GND	—	—	±1	μA
Input current (100 kΩ PU)	I_{IN}	V_I = 0 V_I = NVCC	—	—	25 0.1	μA μA
Input current (100 kΩ PD)	I_{IN}	V_I = 0 V_I = NVCC	—	—	0.25 28	μA μA
Tri-state leakage current	I_{OZ}	V_I = NVCC or GND I/O = High Z	—	—	±2	μA

The MCIMX31 I/O parameters appear in Table 16 for DDR (Double Data Rate). See Table 8, "Operating Ranges," on page 13 for temperature and supply voltage ranges.

NOTE

NVCC for Table 16 refers to NVCC2, NVCC21, and NVCC22.

Table 16. DDR (Double Data Rate) I/O DC Electrical Parameters

Parameter	Symbol	Test Conditions	Min	Typ	Max	Units
High-level output voltage	V_{OH}	I_{OH} = –1 mA	NVCC –0.12	—	—	V
		I_{OH} = specified Drive	0.8*NVCC	—	—	V
Low-level output voltage	V_{OL}	I_{OL} = 1 mA	—	—	0.08	V
		I_{OL} = specified Drive	—	—	0.2*NVCC	V
High-level output current	I_{OH}	V_{OH}=0.8*NVCC Std Drive High Drive Max Drive DDR Drive[1]	 –3.6 –7.2 –10.8 –14.4	—	—	mA

Because of an order from the United States International Trade Commission, BGA-packaged product lines and part numbers indicated here currently are not available from Freescale for import or sale in the United States prior to September 2010: i.MX31 Product Family

Downloaded from Arrow.com.

Table 16. DDR (Double Data Rate) I/O DC Electrical Parameters (continued)

Parameter	Symbol	Test Conditions	Min	Typ	Max	Units
Low-level output current	I_{OL}	V_{OL}=0.2*NVCC Std Drive High Drive Max Drive DDR Drive[1]	 3.6 7.2 10.8 14.4	—	—	mA
High-Level DC input voltage	V_{IH}	—	0.7*NVCC	NVCC	NVCC+0.3	V
Low-Level DC input voltage	V_{IL}	—	–0.3	0	0.3*NVCC	V
Tri-state leakage current	I_{OZ}	V_I = NVCC or GND I/O = High Z	—	—	±2	µA

[1] Use of DDR Drive can result in excessive overshoot and ringing.

4.3.2 AC Electrical Characteristics

Figure 5 depicts the load circuit for outputs. Figure 6 depicts the output transition time waveform. The range of operating conditions appears in Table 17 for slow general I/O, Table 18 for fast general I/O, and Table 19 for DDR I/O (unless otherwise noted).

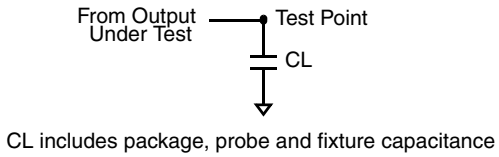

Figure 5. Load Circuit for Output

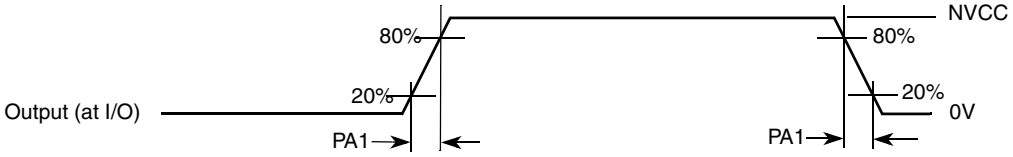

Figure 6. Output Transition Time Waveform

Table 17. AC Electrical Characteristics of Slow[1] General I/O

ID	Parameter	Symbol	Test Condition	Min	Typ	Max	Units
PA1	Output Transition Times (Max Drive)	tpr	25 pF 50 pF	0.92 1.5	1.95 2.98	3.17 4.75	ns
	Output Transition Times (High Drive)	tpr	25 pF 50 pF	1.52 2.75	—	4.81 8.42	ns
	Output Transition Times (Std Drive)	tpr	25 pF 50 pF	2.79 5.39	—	8.56 16.43	ns

[1] Fast/slow characteristic is selected per GPIO (where available) by “slew rate” control. See reference manual.

Because of an order from the United States International Trade Commission, BGA-packaged product lines and part numbers indicated here currently are not available from Freescale for import or sale in the United States prior to September 2010: i.MX31 Product Family

Downloaded from Arrow.com.

Table 18. AC Electrical Characteristics of Fast[1] General I/O [2]

ID	Parameter	Symbol	Test Condition	Min	Typ	Max	Units
PA1	Output Transition Times (Max Drive)	tpr	25 pF 50 pF	0.68 1.34	1.33 2.6	2.07 4.06	ns
	Output Transition Times (High Drive)	tpr	25 pF 50 pF	.91 1.79	1.77 3.47	2.74 5.41	ns
	Output Transition Times (Std Drive)	tpr	25 pF 50 pF	1.36 2.68	2.64 5.19	4.12 8.11	ns

1 Fast/slow characteristic is selected per GPIO (where available) by “slew rate” control. See reference manual.
2 Use of GPIO in fast mode with the associated NVCC > 1.95 V can result in excessive overshoot and ringing.

Table 19. AC Electrical Characteristics of DDR I/O

ID	Parameter	Symbol	Test Condition	Min	Typ	Max	Units
PA1	Output Transition Times (DDR Drive)[1]	tpr	25 pF 50 pF	0.51 0.97	0.82 1.58	1.28 2.46	ns
	Output Transition Times (Max Drive)	tpr	25 pF 50 pF	0.67 1.29	1.08 2.1	1.69 3.27	ns
	Output Transition Times (High Drive)	tpr	25 pF 50 pF	.99 1.93	1.61 3.13	2.51 4.89	ns
	Output Transition Times (Std Drive)	tpr	25 pF 50 pF	1.96 3.82	3.19 6.24	4.99 9.73	ns

1 Use of DDR Drive can result in excessive overshoot and ringing.

4.3.3 Clock Amplifier Module (CAMP) Electrical Characteristics

This section outlines the Clock Amplifier Module (CAMP) specific electrical characteristics. Table 20 shows clock amplifier electrical characteristics.

Table 20. Clock Amplifier Electrical Characteristics for CKIH Input

Parameter	Min	Typ	Max	Units
Input Frequency	15	—	75	MHz
VIL (for square wave input)	0	—	0.3	V
VIH (for square wave input)	(VDD [1]– 0.25)	—	3	V
Sinusoidal Input Amplitude	0.4 [2]	—	VDD	Vp-p
Duty Cycle	45	50	55	%

1 VDD is the supply voltage of CAMP. See reference manual.
2 This value of the sinusoidal input will be measured through characterization.

Because of an order from the United States International Trade Commission, BGA-packaged product lines and part numbers indicated here currently are not available from Freescale for import or sale in the United States prior to September 2010: i.MX31 Product Family

Downloaded from Arrow.com.

4.3.4 1-Wire Electrical Specifications

Figure 7 depicts the RPP timing, and Table 21 lists the RPP timing parameters.

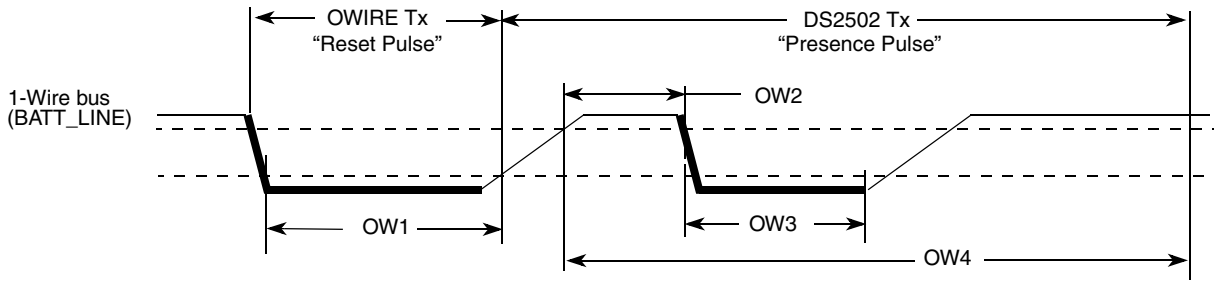

Figure 7. Reset and Presence Pulses (RPP) Timing Diagram

Table 21. RPP Sequence Delay Comparisons Timing Parameters

ID	Parameters	Symbol	Min	Typ	Max	Units
OW1	Reset Time Low	t_{RSTL}	480	511	—	µs
OW2	Presence Detect High	t_{PDH}	15	—	60	µs
OW3	Presence Detect Low	t_{PDL}	60	—	240	µs
OW4	Reset Time High	t_{RSTH}	480	512	—	µs

Figure 8 depicts Write 0 Sequence timing, and Table 22 lists the timing parameters.

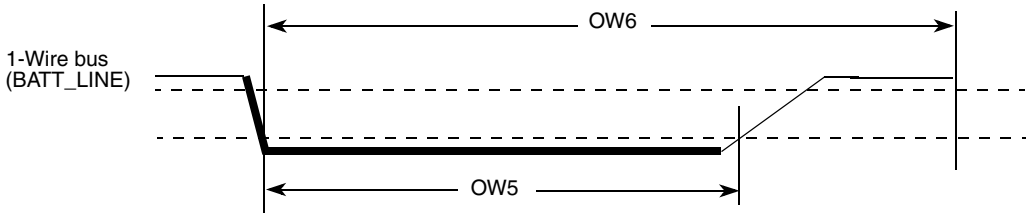

Figure 8. Write 0 Sequence Timing Diagram

Table 22. WR0 Sequence Timing Parameters

ID	Parameter	Symbol	Min	Typ	Max	Units
OW5	Write 0 Low Time	t_{WR0_low}	60	100	120	µs
OW6	Transmission Time Slot	t_{SLOT}	OW5	117	120	µs

Figure 9 depicts Write 1 Sequence timing, Figure 10 depicts the Read Sequence timing, and Table 23 lists the timing parameters.

Because of an order from the United States International Trade Commission, BGA-packaged product lines and part numbers indicated here currently are not available from Freescale for import or sale in the United States prior to September 2010: i.MX31 Product Family

Downloaded from Arrow.com.

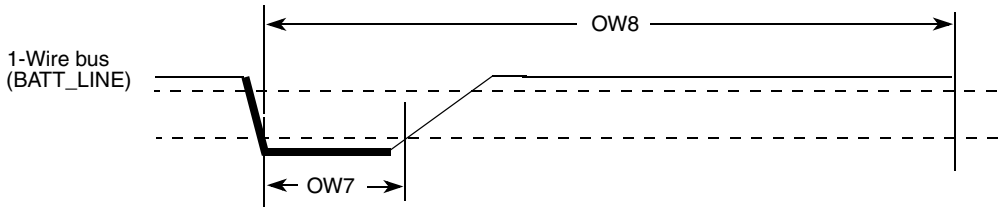

Figure 9. Write 1 Sequence Timing Diagram

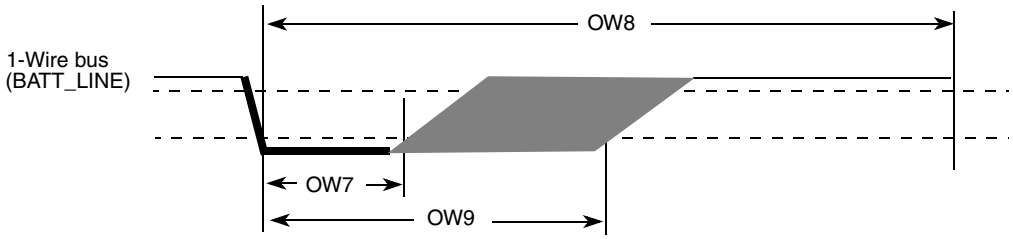

Figure 10. Read Sequence Timing Diagram

Table 23. WR1/RD Timing Parameters

ID	Parameter	Symbol	Min	Typ	Max	Units
OW7	Write 1 / Read Low Time	t_{LOW1}	1	5	15	µs
OW8	Transmission Time Slot	t_{SLOT}	60	117	120	µs
OW9	Release Time	$t_{RELEASE}$	15	—	45	µs

4.3.5 ATA Electrical Specifications (ATA Bus, Bus Buffers)

This section discusses ATA parameters. For a detailed description, refer to the ATA specification.

The user needs to use level shifters for 3.3 Volt or 5.0 Volt compatibility on the ATA interface.

The use of bus buffers introduces delay on the bus and introduces skew between signal lines. These factors make it difficult to operate the bus at the highest speed (UDMA-5) when bus buffers are used. If fast UDMA mode operation is needed, this may not be compatible with bus buffers.

Another area of attention is the slew rate limit imposed by the ATA specification on the ATA bus. According to this limit, any signal driven on the bus should have a slew rate between 0.4 and 1.2 V/ns with a 40 pF load. Not many vendors of bus buffers specify slew rate of the outgoing signals.

When bus buffers are used, the ata_data bus buffer is special. This is a bidirectional bus buffer, so a direction control signal is needed. This direction control signal is ata_buffer_en. When its high, the bus should drive from host to device. When its low, the bus should drive from device to host. Steering of the signal is such that contention on the host and device tri-state busses is always avoided.

Because of an order from the United States International Trade Commission, BGA-packaged product lines and part numbers indicated here currently are not available from Freescale for import or sale in the United States prior to September 2010: i.MX31 Product Family

Downloaded from Arrow.com.

4.3.5.1 Timing Parameters

In the timing equations, some timing parameters are used. These parameters depend on the implementation of the ATA interface on silicon, the bus buffer used, the cable delay and cable skew. Table 24 shows ATA timing parameters.

Table 24. ATA Timing Parameters

Name	Description	Value/ Contributing Factor[1]
T	Bus clock period (ipg_clk_ata)	peripheral clock frequency
ti_ds	Set-up time ata_data to ata_iordy edge (UDMA-in only) UDMA0 UDMA1 UDMA2, UDMA3 UDMA4 UDMA5	 15 ns 10 ns 7 ns 5 ns 4 ns
ti_dh	Hold time ata_iordy edge to ata_data (UDMA-in only) UDMA0, UDMA1, UDMA2, UDMA3, UDMA4 UDMA5	 5.0 ns 4.6 ns
tco	Propagation delay bus clock L-to-H to ata_cs0, ata_cs1, ata_da2, ata_da1, ata_da0, ata_dior, ata_diow, ata_dmack, ata_data, ata_buffer_en	12.0 ns
tsu	Set-up time ata_data to bus clock L-to-H	8.5 ns
tsui	Set-up time ata_iordy to bus clock H-to-L	8.5 ns
thi	Hold time ata_iordy to bus clock H to L	2.5 ns
tskew1	Max difference in propagation delay bus clock L-to-H to any of following signals ata_cs0, ata_cs1, ata_da2, ata_da1, ata_da0, ata_dior, ata_diow, ata_dmack, ata_data (write), ata_buffer_en	7 ns
tskew2	Max difference in buffer propagation delay for any of following signals ata_cs0, ata_cs1, ata_da2, ata_da1, ata_da0, ata_dior, ata_diow, ata_dmack, ata_data (write), ata_buffer_en	transceiver
tskew3	Max difference in buffer propagation delay for any of following signals ata_iordy, ata_data (read)	transceiver
tbuf	Max buffer propagation delay	transceiver
tcable1	Cable propagation delay for ata_data	cable
tcable2	Cable propagation delay for control signals ata_dior, ata_diow, ata_iordy, ata_dmack	cable
tskew4	Max difference in cable propagation delay between ata_iordy and ata_data (read)	cable
tskew5	Max difference in cable propagation delay between (ata_dior, ata_diow, ata_dmack) and ata_cs0, ata_cs1, ata_da2, ata_da1, ata_da0, ata_data(write)	cable
tskew6	Max difference in cable propagation delay without accounting for ground bounce	cable

[1] Values provided where applicable.

Because of an order from the United States International Trade Commission, BGA-packaged product lines and part numbers indicated here currently are not available from Freescale for import or sale in the United States prior to September 2010: i.MX31 Product Family

Downloaded from Arrow.com.

4.3.5.2 PIO Mode Timing

Figure 11 shows timing for PIO read, and Table 25 lists the timing parameters for PIO read.

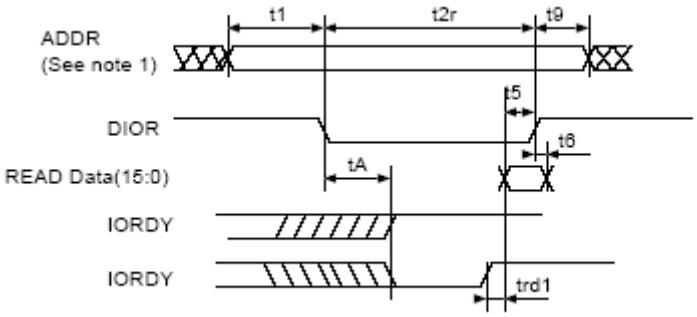

Figure 11. PIO Read Timing Diagram

Table 25. PIO Read Timing Parameters

ATA Parameter	Parameter from Figure 11	Value	Controlling Variable
t1	t1	t1 (min) = time_1 * T – (tskew1 + tskew2 + tskew5)	time_1
t2	t2r	t2 min) = time_2r * T – (tskew1 + tskew2 + tskew5)	time_2r
t9	t9	t9 (min) = time_9 * T – (tskew1 + tskew2 + tskew6)	time_3
t5	t5	t5 (min) = tco + tsu + tbuf + tbuf + tcable1 + tcable2	If not met, increase time_2
t6	t6	0	—
tA	tA	tA (min) = (1.5 + time_ax) * T – (tco + tsui + tcable2 + tcable2 + 2*tbuf)	time_ax
trd	trd1	trd1 (max) = (–trd) + (tskew3 + tskew4) trd1 (min) = (time_pio_rdx – 0.5)*T – (tsu + thi) (time_pio_rdx – 0.5) * T > tsu + thi + tskew3 + tskew4	time_pio_rdx
t0	—	t0 (min) = (time_1 + time_2 + time_9) * T	time_1, time_2r, time_9

Figure 12 shows timing for PIO write, and Table 26 lists the timing parameters for PIO write.

Because of an order from the United States International Trade Commission, BGA-packaged product lines and part numbers indicated here currently are not available from Freescale for import or sale in the United States prior to September 2010: i.MX31 Product Family

Downloaded from Arrow.com.

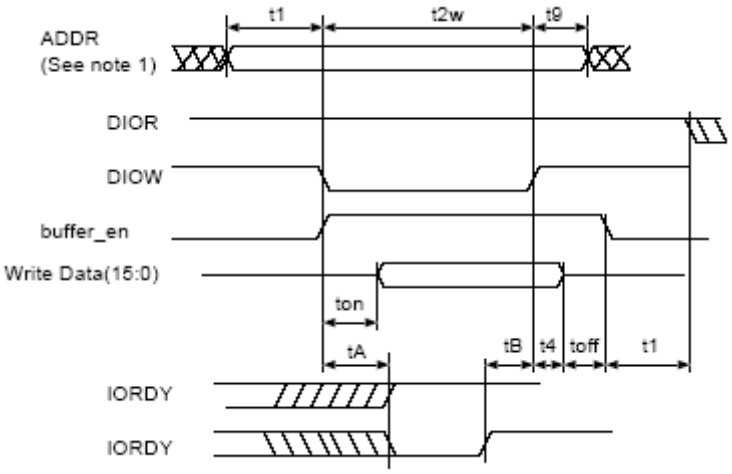

Figure 12. Multiword DMA (MDMA) Timing

Table 26. PIO Write Timing Parameters

ATA Parameter	Parameter from Figure 12	Value	Controlling Variable
t1	t1	t1 (min) = time_1 * T – (tskew1 + tskew2 + tskew5)	time_1
t2	t2w	t2 (min) = time_2w * T – (tskew1 + tskew2 + tskew5)	time_2w
t9	t9	t9 (min) = time_9 * T – (tskew1 + tskew2 + tskew6)	time_9
t3	—	t3 (min) = (time_2w – time_on)* T – (tskew1 + tskew2 +tskew5)	If not met, increase time_2w
t4	t4	t4 (min) = time_4 * T – tskew1	time_4
tA	tA	tA = (1.5 + time_ax) * T – (tco + tsui + tcable2 + tcable2 + 2*tbuf)	time_ax
t0	—	t0(min) = (time_1 + time_2 + time_9) * T	time_1, time_2r, time_9
—	—	Avoid bus contention when switching buffer on by making ton long enough.	—
—	—	Avoid bus contention when switching buffer off by making toff long enough.	—

Figure 13 shows timing for MDMA read, Figure 14 shows timing for MDMA write, and Table 27 lists the timing parameters for MDMA read and write.

Because of an order from the United States International Trade Commission, BGA-packaged product lines and part numbers indicated here currently are not available from Freescale for import or sale in the United States prior to September 2010: i.MX31 Product Family

Downloaded from Arrow.com.

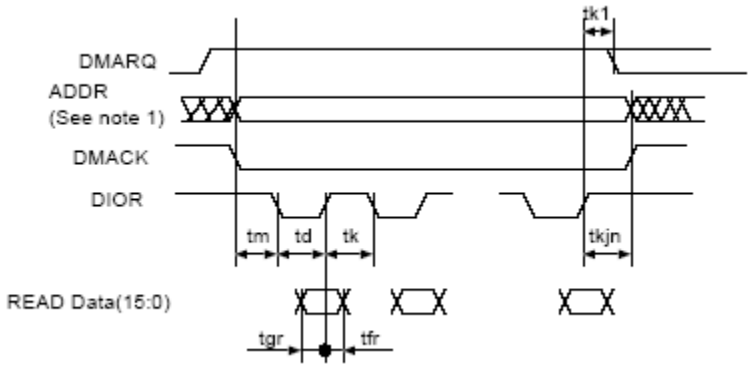

Figure 13. MDMA Read Timing Diagram

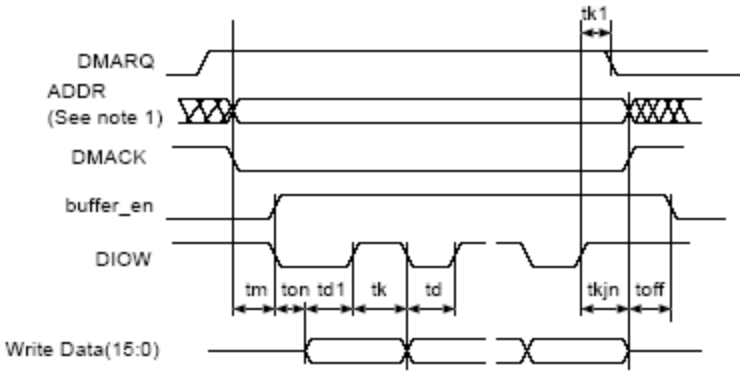

Figure 14. MDMA Write Timing Diagram

Table 27. MDMA Read and Write Timing Parameters

ATA Parameter	Parameter from Figure 13, Figure 14	Value	Controlling Variable
tm, ti	tm	tm (min) = ti (min) = time_m * T – (tskew1 + tskew2 + tskew5)	time_m
td	td, td1	td1.(min) = td (min) = time_d * T – (tskew1 + tskew2 + tskew6)	time_d
tk	tk	tk.(min) = time_k * T – (tskew1 + tskew2 + tskew6)	time_k
t0	—	t0 (min) = (time_d + time_k) * T	time_d, time_k
tg(read)	tgr	tgr (min-read) = tco + tsu + tbuf + tbuf + tcable1 + tcable2 tgr.(min-drive) = td – te(drive)	time_d
tf(read)	tfr	tfr (min-drive) = 0	—
tg(write)	—	tg (min-write) = time_d * T – (tskew1 + tskew2 + tskew5)	time_d
tf(write)	—	tf (min-write) = time_k * T – (tskew1 + tskew2 + tskew6)	time_k
tL	—	tL (max) = (time_d + time_k–2)*T – (tsu + tco + 2*tbuf + 2*tcable2)	time_d, time_k
tn, tj	tkjn	tn= tj= tkjn = (max(time_k,. time_jn) * T – (tskew1 + tskew2 + tskew6)	time_jn
—	ton toff	ton = time_on * T – tskew1 toff = time_off * T – tskew1	—

Because of an order from the United States International Trade Commission, BGA-packaged product lines and part numbers indicated here currently are not available from Freescale for import or sale in the United States prior to September 2010: i.MX31 Product Family

Downloaded from Arrow.com.

4.3.5.3 UDMA In Timing

Figure 15 shows timing when the UDMA in transfer starts, Figure 16 shows timing when the UDMA in host terminates transfer, Figure 17 shows timing when the UDMA in device terminates transfer, and Table 28 lists the timing parameters for UDMA in burst.

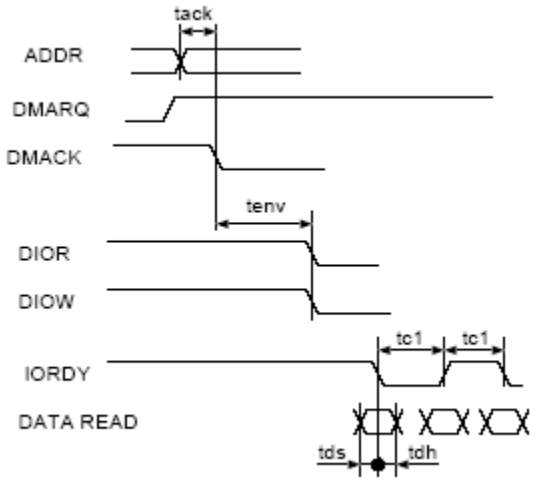

Figure 15. UDMA In Transfer Starts Timing Diagram

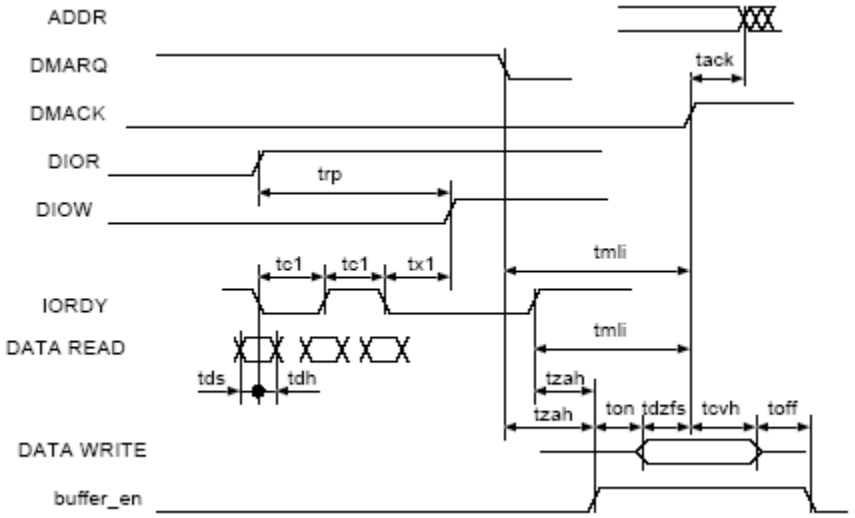

Figure 16. UDMA In Host Terminates Transfer Timing Diagram

Because of an order from the United States International Trade Commission, BGA-packaged product lines and part numbers indicated here currently are not available from Freescale for import or sale in the United States prior to September 2010: i.MX31 Product Family

Downloaded from Arrow.com.

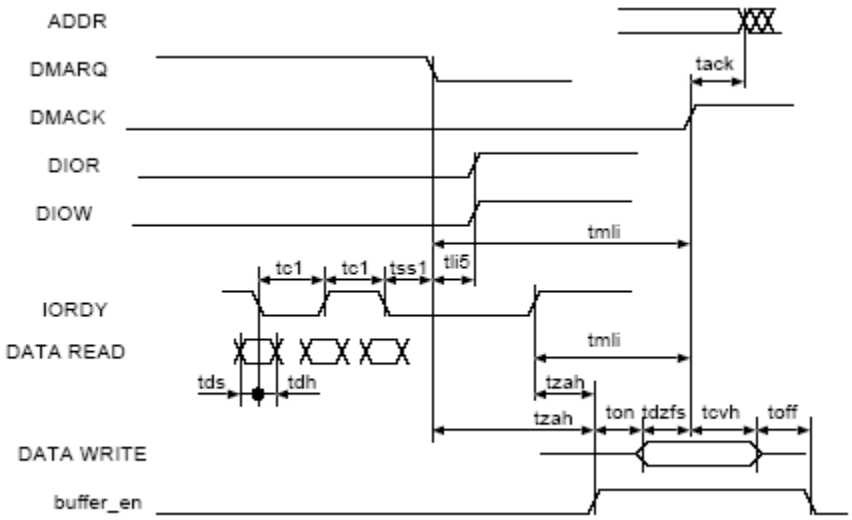

Figure 17. UDMA In Device Terminates Transfer Timing Diagram

Table 28. UDMA In Burst Timing Parameters

ATA Parameter	Parameter from Figure 15, Figure 16, Figure 17	Description	Controlling Variable
tack	tack	tack (min) = (time_ack * T) – (tskew1 + tskew2)	time_ack
tenv	tenv	tenv (min) = (time_env * T) – (tskew1 + tskew2) tenv (max) = (time_env * T) + (tskew1 + tskew2)	time_env
tds	tds1	tds – (tskew3) – ti_ds > 0	tskew3, ti_ds, ti_dh should be low enough
tdh	tdh1	tdh – (tskew3) – ti_dh > 0	
tcyc	tc1	(tcyc – tskew) > T	T big enough
trp	trp	trp (min) = time_rp * T – (tskew1 + tskew2 + tskew6)	time_rp
—	tx1[1]	(time_rp * T) – (tco + tsu + 3T + 2 *tbuf + 2*tcable2) > trfs (drive)	time_rp
tmli	tmli1	tmli1 (min) = (time_mlix + 0.4) * T	time_mlix
tzah	tzah	tzah (min) = (time_zah + 0.4) * T	time_zah
tdzfs	tdzfs	tdzfs = (time_dzfs * T) – (tskew1 + tskew2)	time_dzfs
tcvh	tcvh	tcvh = (time_cvh *T) – (tskew1 + tskew2)	time_cvh
—	ton toff	ton = time_on * T – tskew1 toff = time_off * T – tskew1	—

[1] There is a special timing requirement in the ATA host that requires the internal DIOW to go only high 3 clocks after the last active edge on the DSTROBE signal. The equation given on this line tries to capture this constraint.

2. Make ton and toff big enough to avoid bus contention

Because of an order from the United States International Trade Commission, BGA-packaged product lines and part numbers indicated here currently are not available from Freescale for import or sale in the United States prior to September 2010: i.MX31 Product Family

Downloaded from Arrow.com.

4.3.5.4 UDMA Out Timing

Figure 18 shows timing when the UDMA out transfer starts, Figure 19 shows timing when the UDMA out host terminates transfer, Figure 20 shows timing when the UDMA out device terminates transfer, and Table 29 lists the timing parameters for UDMA out burst.

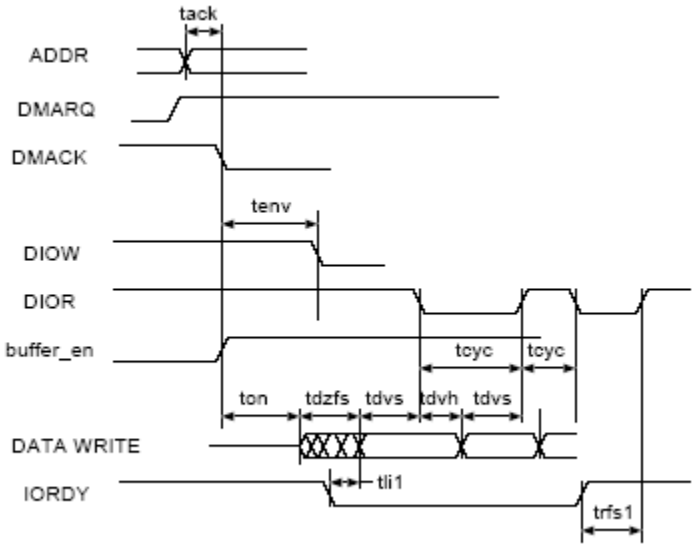

Figure 18. UDMA Out Transfer Starts Timing Diagram

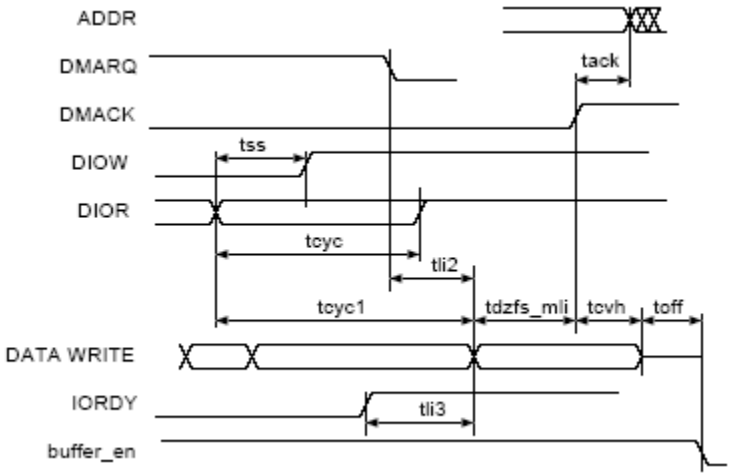

Figure 19. UDMA Out Host Terminates Transfer Timing Diagram

Because of an order from the United States International Trade Commission, BGA-packaged product lines and part numbers indicated here currently are not available from Freescale for import or sale in the United States prior to September 2010: i.MX31 Product Family

Downloaded from Arrow.com.

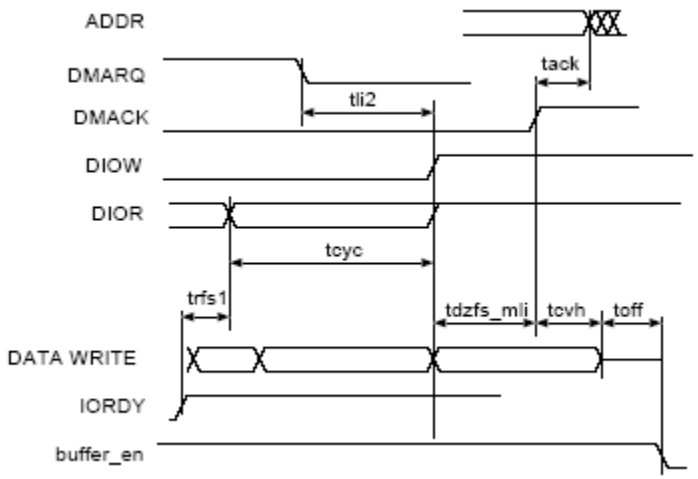

Figure 20. UDMA Out Device Terminates Transfer Timing Diagram

Table 29. UDMA Out Burst Timing Parameters

ATA Parameter	Parameter from Figure 18, Figure 19, Figure 20	Value	Controlling Variable
tack	tack	tack (min) = (time_ack * T) – (tskew1 + tskew2)	time_ack
tenv	tenv	tenv (min) = (time_env * T) – (tskew1 + tskew2) tenv (max) = (time_env * T) + (tskew1 + tskew2)	time_env
tdvs	tdvs	tdvs = (time_dvs * T) – (tskew1 + tskew2)	time_dvs
tdvh	tdvh	tdvs = (time_dvh * T) – (tskew1 + tskew2)	time_dvh
tcyc	tcyc	tcyc = time_cyc * T – (tskew1 + tskew2)	time_cyc
t2cyc	—	t2cyc = time_cyc * 2 * T	time_cyc
trfs1	trfs	trfs = 1.6 * T + tsui + tco + tbuf + tbuf	—
—	tdzfs	tdzfs = time_dzfs * T – (tskew1)	time_dzfs
tss	tss	tss = time_ss * T – (tskew1 + tskew2)	time_ss
tmli	tdzfs_mli	tdzfs_mli =max (time_dzfs, time_mli) * T – (tskew1 + tskew2)	—
tli	tli1	tli1 > 0	—
tli	tli2	tli2 > 0	—
tli	tli3	tli3 > 0	—
tcvh	tcvh	tcvh = (time_cvh *T) – (tskew1 + tskew2)	time_cvh
—	ton toff	ton = time_on * T – tskew1 toff = time_off * T – tskew1	—

Because of an order from the United States International Trade Commission, BGA-packaged product lines and part numbers indicated here currently are not available from Freescale for import or sale in the United States prior to September 2010: i.MX31 Product Family

Downloaded from Arrow.com.

4.3.6 AUDMUX Electrical Specifications

The AUDMUX provides a programmable interconnect logic for voice, audio and data routing between internal serial interfaces (SSI) and external serial interfaces (audio and voice codecs). The AC timing of AUDMUX external pins is hence governed by the SSI module. Please refer to their respective electrical specifications.

4.3.7 CSPI Electrical Specifications

This section describes the electrical information of the CSPI.

4.3.7.1 CSPI Timing

Figure 21 and Figure 22 depict the master mode and slave mode timings of CSPI, and Table 30 lists the timing parameters.

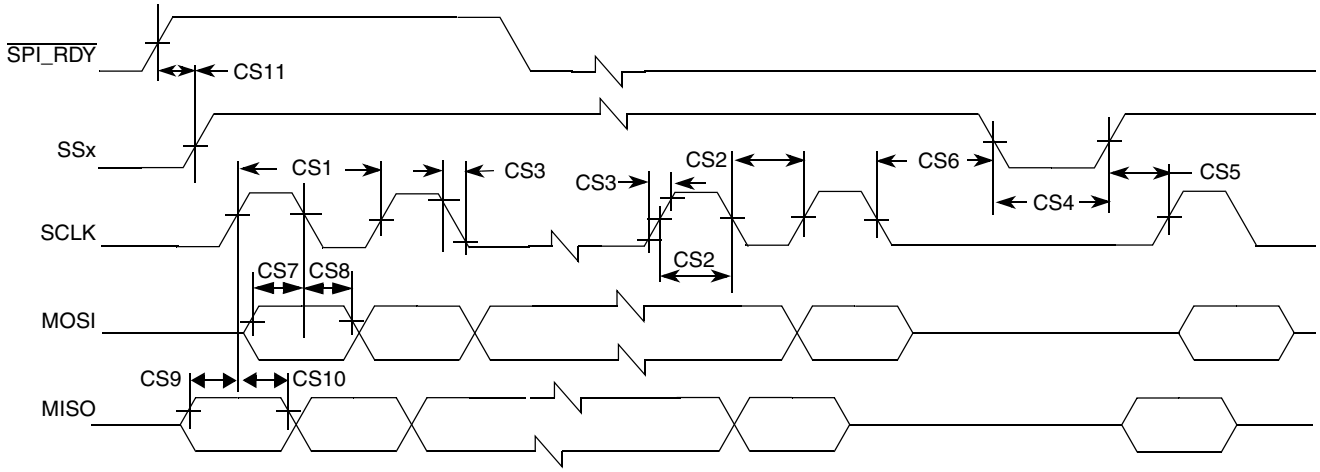

Figure 21. CSPI Master Mode Timing Diagram

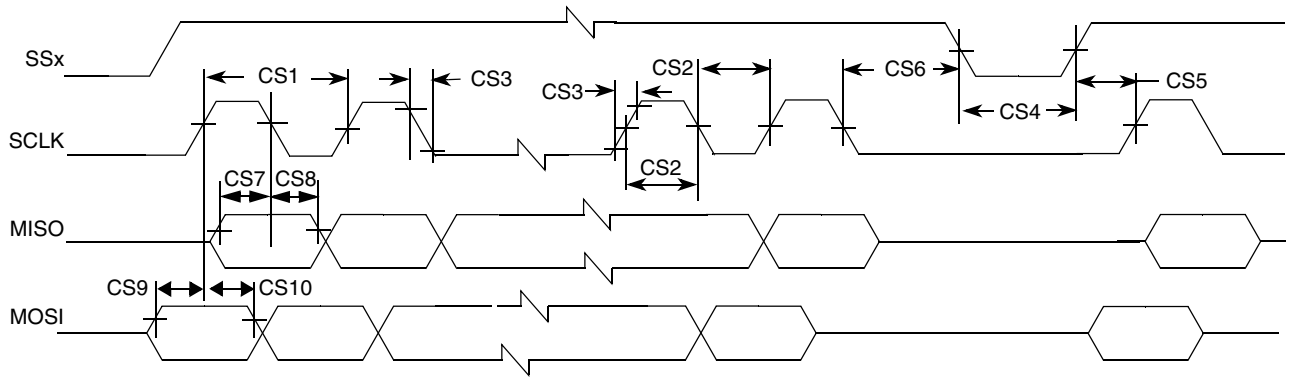

Figure 22. CSPI Slave Mode Timing Diagram

Because of an order from the United States International Trade Commission, BGA-packaged product lines and part numbers indicated here currently are not available from Freescale for import or sale in the United States prior to September 2010: i.MX31 Product Family

Downloaded from Arrow.com.

Table 30. CSPI Interface Timing Parameters

ID	Parameter	Symbol	Min	Max	Units
CS1	SCLK Cycle Time	t_{clk}	60	—	ns
CS2	SCLK High or Low Time	t_{SW}	30	—	ns
CS3	SCLK Rise or Fall	$t_{RISE/FALL}$	—	7.6	ns
CS4	SSx pulse width	t_{CSLH}	25	—	ns
CS5	SSx Lead Time (CS setup time)	t_{SCS}	25	—	ns
CS6	SSx Lag Time (CS hold time)	t_{HCS}	25	—	ns
CS7	Data Out Setup Time	t_{Smosi}	5	—	ns
CS8	Data Out Hold Time	t_{Hmosi}	5	—	ns
CS9	Data In Setup Time	t_{Smiso}	6	—	ns
CS10	Data In Hold Time	t_{Hmiso}	5	—	ns
CS11	$\overline{\text{SPI_RDY}}$ Setup Time[1]	t_{SRDY}	—	—	ns

[1] SPI_RDY is sampled internally by ipg_clk and is asynchronous to all other CSPI signals.

4.3.8 DPLL Electrical Specifications

The three PLL's of the MCIMX31 (MCU, USB, and Serial PLL) are all based on same DPLL design. The characteristics provided herein apply to all of them, except where noted explicitly. The PLL characteristics are provided based on measurements done for both sources—external clock source (CKIH), and FPM (Frequency Pre-Multiplier) source.

4.3.8.1 Electrical Specifications

Table 31 lists the DPLL specification.

Table 31. DPLL Specifications

Parameter	Min	Typ	Max	Unit	Comments
CKIH frequency	15	26[1]	75[2]	MHz	—
CKIL frequency (Frequency Pre-multiplier (FPM) enable mode)	—	32; 32.768, 38.4	—	kHz	FPM lock time ≈ 480 µs.
Predivision factor (PD bits)	1	—	16	—	—
PLL reference frequency range after Predivider	15	—	35	MHz	15 ≤ CKIH frequency/PD ≤ 35 MHz 15 ≤ FPM output/PD ≤ 35 MHz
PLL output frequency range: MPLL and SPLL UPLL	 52 190	—	 532 240	MHz	—
Maximum allowed reference clock phase noise.	—	—	± 100	ps	—
Frequency lock time (FOL mode or non-integer MF)	—	—	398	—	Cycles of divided reference clock.

Because of an order from the United States International Trade Commission, BGA-packaged product lines and part numbers indicated here currently are not available from Freescale for import or sale in the United States prior to September 2010: i.MX31 Product Family

Downloaded from Arrow.com.

Table 31. DPLL Specifications (continued)

Parameter	Min	Typ	Max	Unit	Comments
Phase lock time	—	—	100	µs	In addition to the frequency
Maximum allowed PLL supply voltage ripple	—	—	25	mV	$F_{modulation}$ < 50 kHz
Maximum allowed PLL supply voltage ripple	—	—	20	mV	50 kHz < $F_{modulation}$ < 300 kHz
Maximum allowed PLL supply voltage ripple	—	—	25	mV	$F_{modulation}$ > 300 kHz
PLL output clock phase jitter	—	—	5.2	ns	Measured on CLKO pin
PLL output clock period jitter	—	—	420	ps	Measured on CLKO pin

[1] The user or board designer must take into account that the use of a frequency other than 26 MHz would require adjustment to the DPTC–DVFS table, which is incorporated into operating system code.

[2] The PLL reference frequency must be ≤ 35 MHz. Therefore, for frequencies between 35 MHz and 70 MHz, program the predivider to divide by 2 or more. If the CKIH frequency is above 70 MHz, program the predivider to 3 or more. For PD bit description, see the reference manual.

4.3.9 EMI Electrical Specifications

This section provides electrical parametrics and timings for EMI module.

4.3.9.1 NAND Flash Controller Interface (NFC)

The NFC supports normal timing mode, using two flash clock cycles for one access of $\overline{RE}$ and $\overline{WE}$. AC timings are provided as multiplications of the clock cycle and fixed delay. Figure 23, Figure 24, Figure 25, and Figure 26 depict the relative timing requirements among different signals of the NFC at module level, for normal mode, and Table 32 lists the timing parameters.

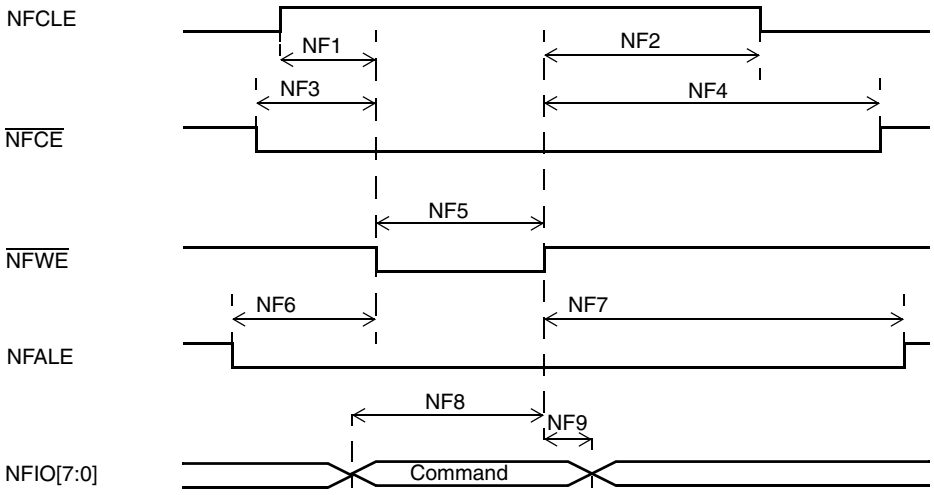

Figure 23. Command Latch Cycle Timing Diagram

Because of an order from the United States International Trade Commission, BGA-packaged product lines and part numbers indicated here currently are not available from Freescale for import or sale in the United States prior to September 2010: i.MX31 Product Family

Downloaded from Arrow.com.

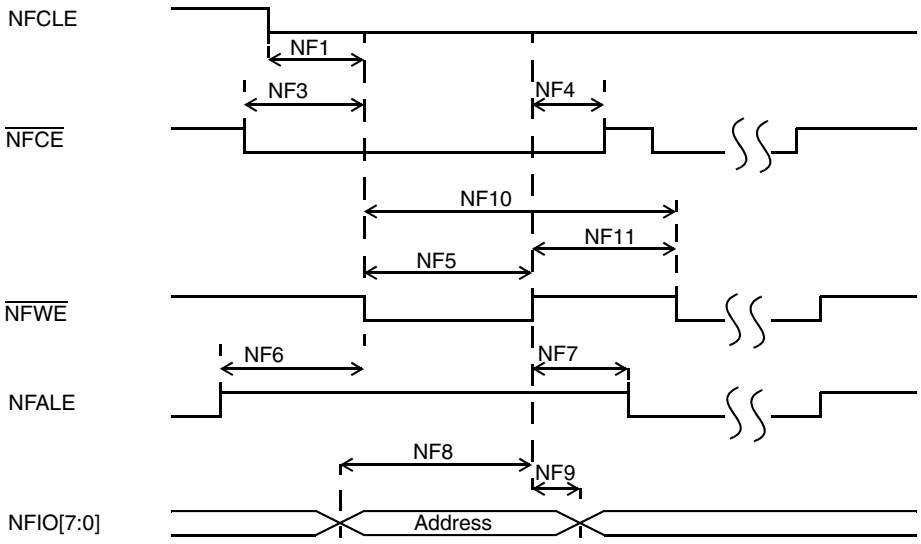

Figure 24. Address Latch Cycle Timing Diagram

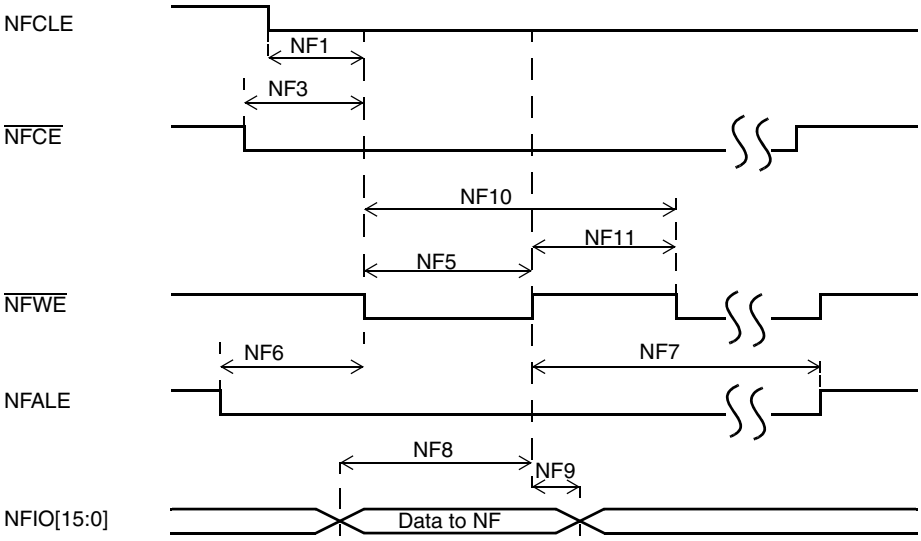

Figure 25. Write Data Latch Cycle Timing Diagram

Because of an order from the United States International Trade Commission, BGA-packaged product lines and part numbers indicated here currently are not available from Freescale for import or sale in the United States prior to September 2010: i.MX31 Product Family

Downloaded from Arrow.com.

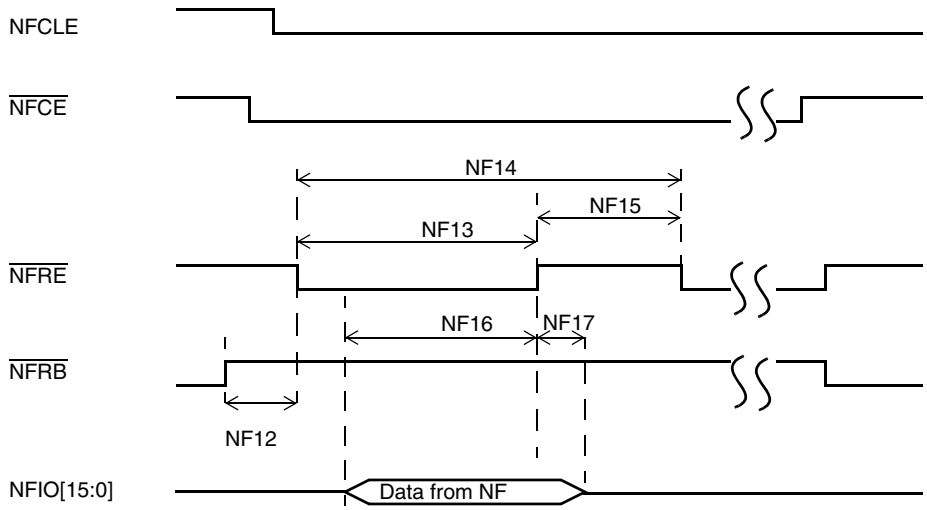

Figure 26. Read Data Latch Cycle Timing Diagram

Table 32. NFC Timing Parameters[1]

ID	Parameter	Symbol	Timing T = NFC Clock Cycle[2]		Example Timing for NFC Clock ≈ 33 MHz T = 30 ns		Unit
			Min	Max	Min	Max	
NF1	NFCLE Setup Time	tCLS	T–1.0 ns	—	29	—	ns
NF2	NFCLE Hold Time	tCLH	T–2.0 ns	—	28	—	ns
NF3	$\overline{\text{NFCE}}$ Setup Time	tCS	T–1.0 ns	—	29	—	ns
NF4	$\overline{\text{NFCE}}$ Hold Time	tCH	T–2.0 ns	—	28	—	ns
NF5	$\overline{\text{NF_WP}}$ Pulse Width	tWP	T–1.5 ns		28.5		ns
NF6	NFALE Setup Time	tALS	T	—	30	—	ns
NF7	NFALE Hold Time	tALH	T–3.0 ns	—	27	—	ns
NF8	Data Setup Time	tDS	T	—	30	—	ns
NF9	Data Hold Time	tDH	T–5.0 ns	—	25	—	ns
NF10	Write Cycle Time	tWC	2T		60		ns
NF11	$\overline{\text{NFWE}}$ Hold Time	tWH	T–2.5 ns		27.5		ns
NF12	Ready to $\overline{\text{NFRE}}$ Low	tRR	6T	—	180	—	ns
NF13	$\overline{\text{NFRE}}$ Pulse Width	tRP	1.5T	—	45	—	ns
NF14	READ Cycle Time	tRC	2T	—	60	—	ns
NF15	$\overline{\text{NFRE}}$ High Hold Time	tREH	0.5T–2.5 ns		12.5	—	ns
NF16	Data Setup on READ	tDSR	N/A		10	—	ns
NF17	Data Hold on READ	tDHR	N/A		0	—	ns

[1] The flash clock maximum frequency is 50 MHz.
[2] Subject to DPLL jitter specification on Table 31, "DPLL Specifications," on page 37.

Because of an order from the United States International Trade Commission, BGA-packaged product lines and part numbers indicated here currently are not available from Freescale for import or sale in the United States prior to September 2010: i.MX31 Product Family

Downloaded from Arrow.com.

NOTE

High is defined as 80% of signal value and low is defined as 20% of signal value.

Timing for HCLK is 133 MHz and internal NFC clock (flash clock) is approximately 33 MHz (30 ns). All timings are listed according to this NFC clock frequency (multiples of NFC clock phases), except NF16 and NF17, which are not NFC clock related.

4.3.9.2 Wireless External Interface Module (WEIM)

All WEIM output control signals may be asserted and deasserted by internal clock related to BCLK rising edge or falling edge according to corresponding assertion/negation control fields. Address always begins related to BCLK falling edge but may be ended both on rising and falling edge in muxed mode according to control register configuration. Output data begins related to BCLK rising edge except in muxed mode where both rising and falling edge may be used according to control register configuration. Input data, $\overline{\text{ECB}}$ and $\overline{\text{DTACK}}$ all captured according to BCLK rising edge time. Figure 27 depicts the timing of the WEIM module, and Table 33 lists the timing parameters.

Because of an order from the United States International Trade Commission, BGA-packaged product lines and part numbers indicated here currently are not available from Freescale for import or sale in the United States prior to September 2010: i.MX31 Product Family

Downloaded from Arrow.com.

WEIM Outputs Timing

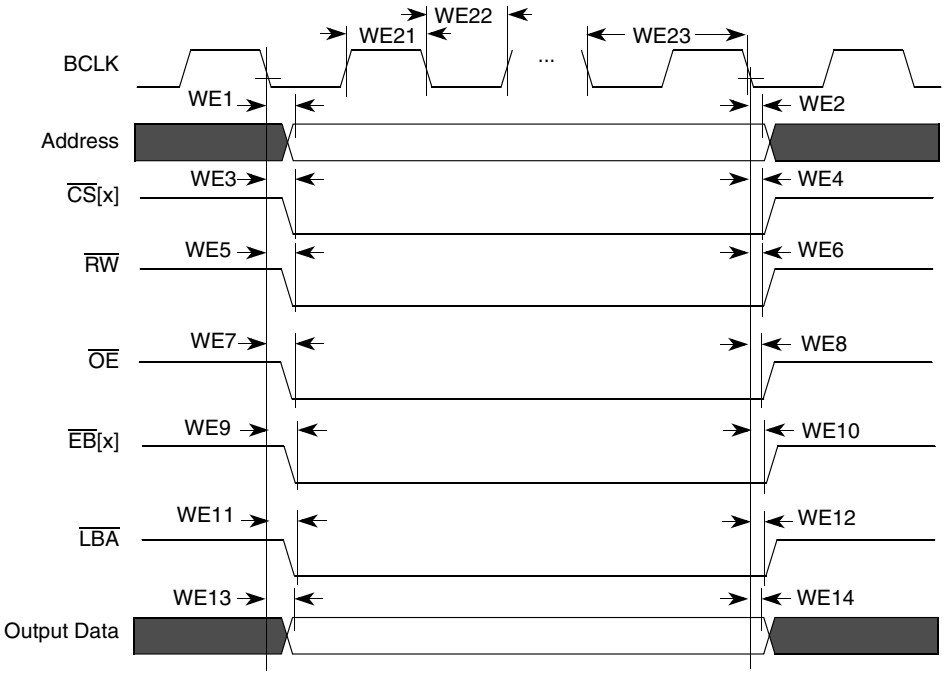

WEIM Inputs Timing

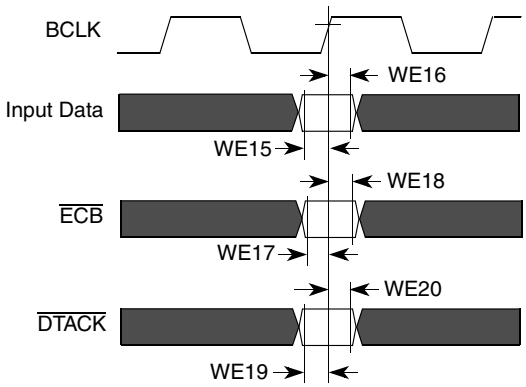

Figure 27. WEIM Bus Timing Diagram

Table 33. WEIM Bus Timing Parameters

ID	Parameter	Min	Max	Unit
WE1	Clock fall to Address Valid	–0.5	2.5	ns
WE2	Clock rise/fall to Address Invalid	–0.5	5	ns
WE3	Clock rise/fall to $\overline{CS}$[x] Valid	–3	3	ns
WE4	Clock rise/fall to $\overline{CS}$[x] Invalid	–3	3	ns
WE5	Clock rise/fall to $\overline{RW}$ Valid	–3	3	ns
WE6	Clock rise/fall to $\overline{RW}$ Invalid	–3	3	ns
WE7	Clock rise/fall to $\overline{OE}$ Valid	–3	3	ns

Because of an order from the United States International Trade Commission, BGA-packaged product lines and part numbers indicated here currently are not available from Freescale for import or sale in the United States prior to September 2010: i.MX31 Product Family

Downloaded from Arrow.com.

Table 33. WEIM Bus Timing Parameters (continued)

ID	Parameter	Min	Max	Unit
WE8	Clock rise/fall to $\overline{OE}$ Invalid	–3	3	ns
WE9	Clock rise/fall to $\overline{EB}$[x] Valid	–3	3	ns
WE10	Clock rise/fall to $\overline{EB}$[x] Invalid	–3	3	ns
WE11	Clock rise/fall to $\overline{LBA}$ Valid	–3	3	ns
WE12	Clock rise/fall to $\overline{LBA}$ Invalid	–3	3	ns
WE13	Clock rise/fall to Output Data Valid	–2.5	4	ns
WE14	Clock rise to Output Data Invalid	–2.5	4	ns
WE15	Input Data Valid to Clock rise, FCE=0 FCE=1	8 2.5	—	ns
WE16	Clock rise to Input Data Invalid, FCE=0 FCE=1	–2 –2	—	ns
WE17	$\overline{ECB}$ setup time, FCE=0 FCE=1	6.5 3.5	—	ns
WE18	$\overline{ECB}$ hold time, FCE=0 FCE=1	–2 2	—	ns
WE19	$\overline{DTACK}$ setup time[1]	0	—	ns
WE20	$\overline{DTACK}$ hold time[1]	4.5	—	ns
WE21	BCLK High Level Width[2, 3]	—	T/2 – 3	ns
WE22	BCLK Low Level Width[2, 3]	—	T/2 – 3	ns
WE23	BCLK Cycle time[2]	15	—	ns

1 Applies to rising edge timing
2 BCLK parameters are being measured from the 50% VDD.
3 The actual cycle time is derived from the AHB bus clock frequency.

NOTE

High is defined as 80% of signal value and low is defined as 20% of signal value.

Test conditions: load capacitance, 25 pF. Recommended drive strength for all controls, address, and BCLK is Max drive.

Figure 28, Figure 29, Figure 30, Figure 31, Figure 32, and Figure 33 depict some examples of basic WEIM accesses to external memory devices with the timing parameters mentioned in Table 33 for specific control parameter settings.

Because of an order from the United States International Trade Commission, BGA-packaged product lines and part numbers indicated here currently are not available from Freescale for import or sale in the United States prior to September 2010: i.MX31 Product Family

Downloaded from Arrow.com.

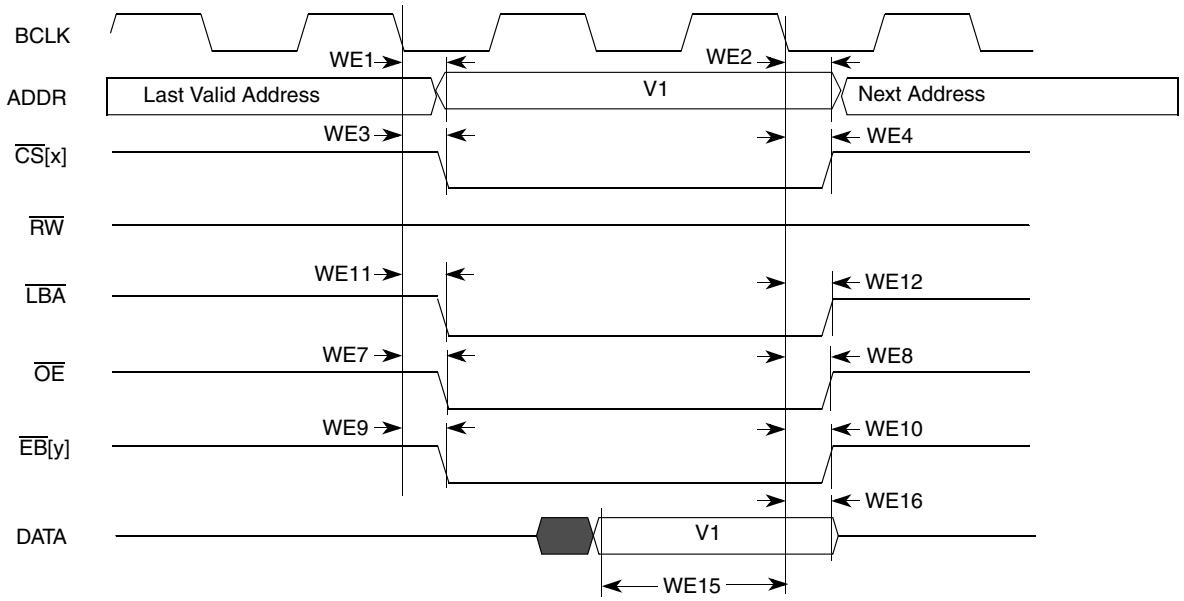

Figure 28. Asynchronous Memory Timing Diagram for Read Access—WSC=1

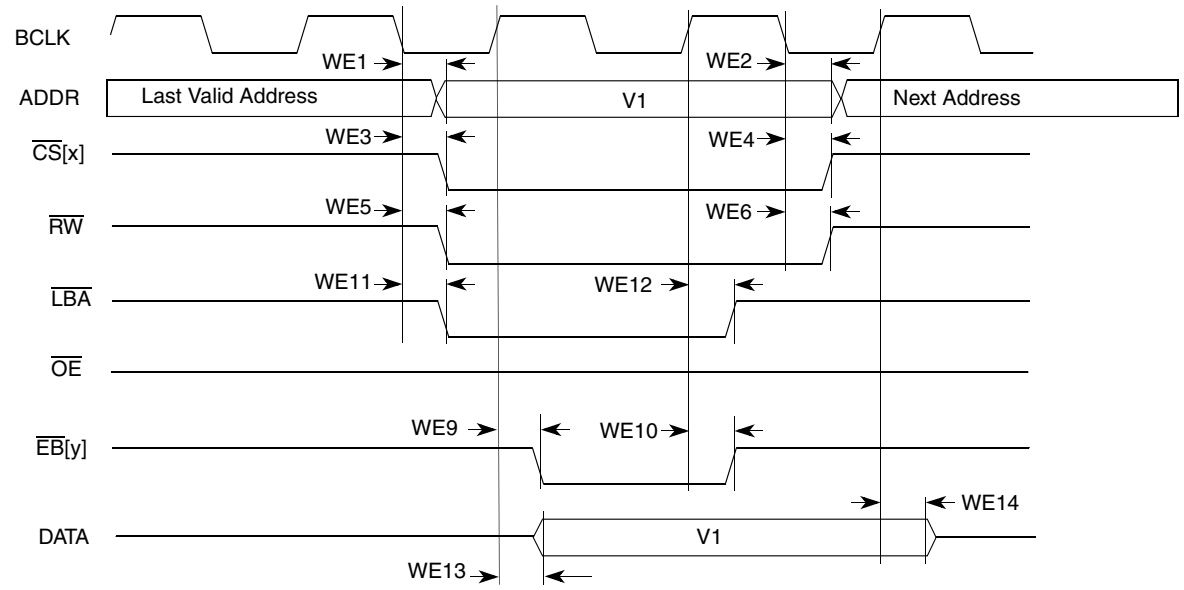

Figure 29. Asynchronous Memory Timing Diagram for Write Access—WSC=1, EBWA=1, EBWN=1, LBN=1

Because of an order from the United States International Trade Commission, BGA-packaged product lines and part numbers indicated here currently are not available from Freescale for import or sale in the United States prior to September 2010: i.MX31 Product Family

Downloaded from Arrow.com.

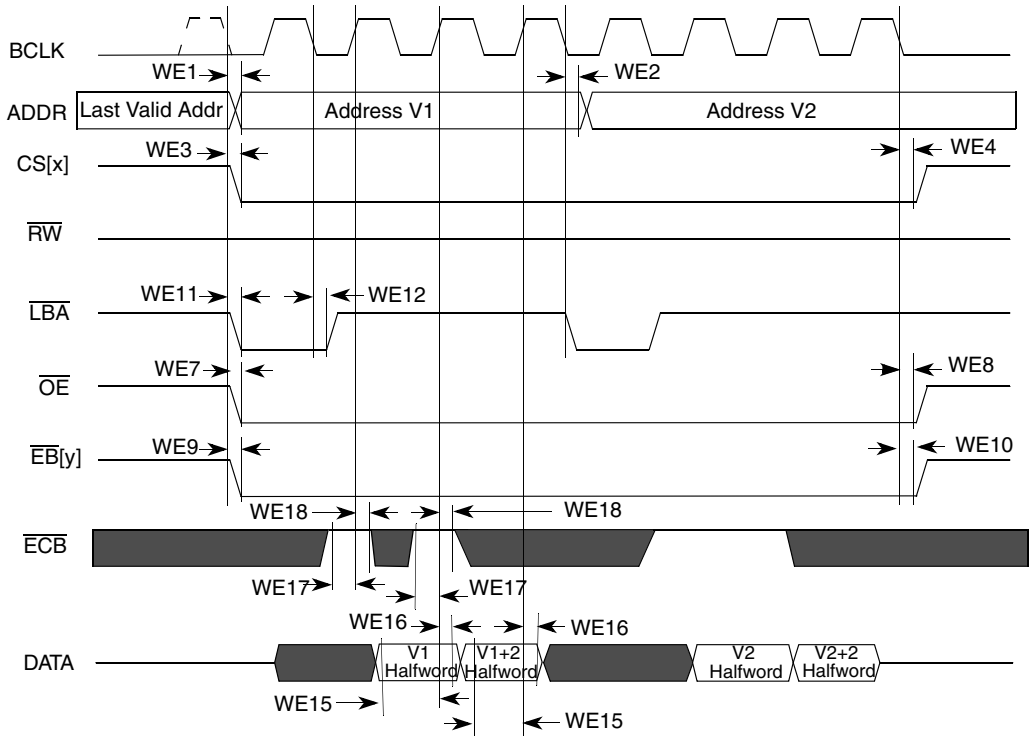

Figure 30. Synchronous Memory Timing Diagram for Two Non-Sequential Read Accesses—WSC=2, SYNC=1, DOL=0

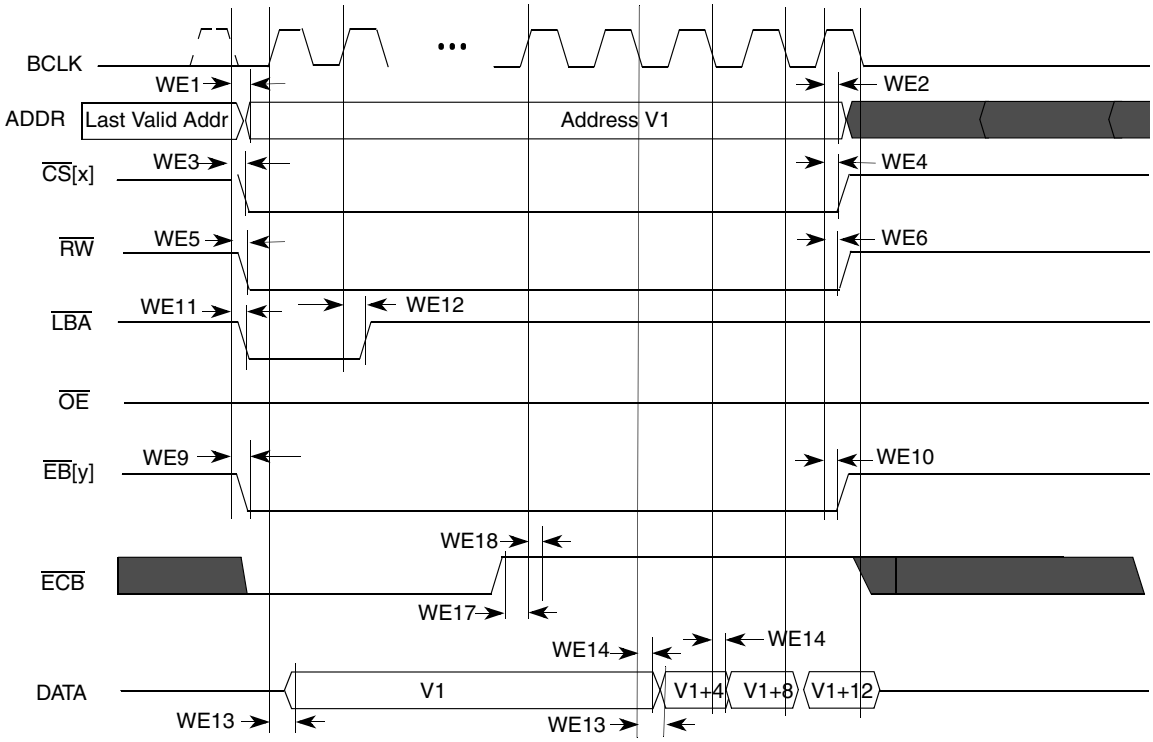

Figure 31. Synchronous Memory TIming Diagram for Burst Write Access—BCS=1, WSC=4, SYNC=1, DOL=0, PSR=1

Because of an order from the United States International Trade Commission, BGA-packaged product lines and part numbers indicated here currently are not available from Freescale for import or sale in the United States prior to September 2010: i.MX31 Product Family

Downloaded from Arrow.com.

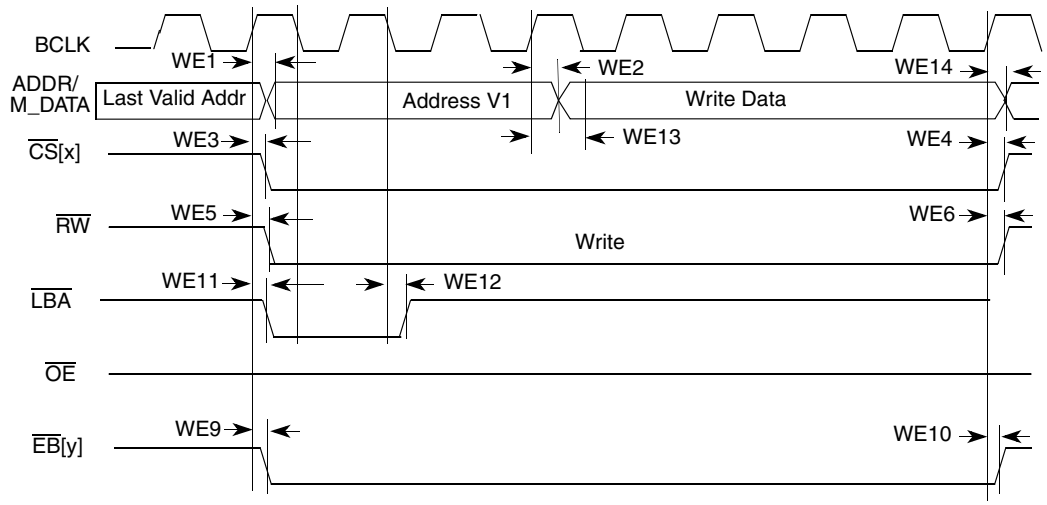

Figure 32. Muxed A/D Mode Timing Diagram for Asynchronous Write Access—WSC=7, LBA=1, LBN=1, LAH=1

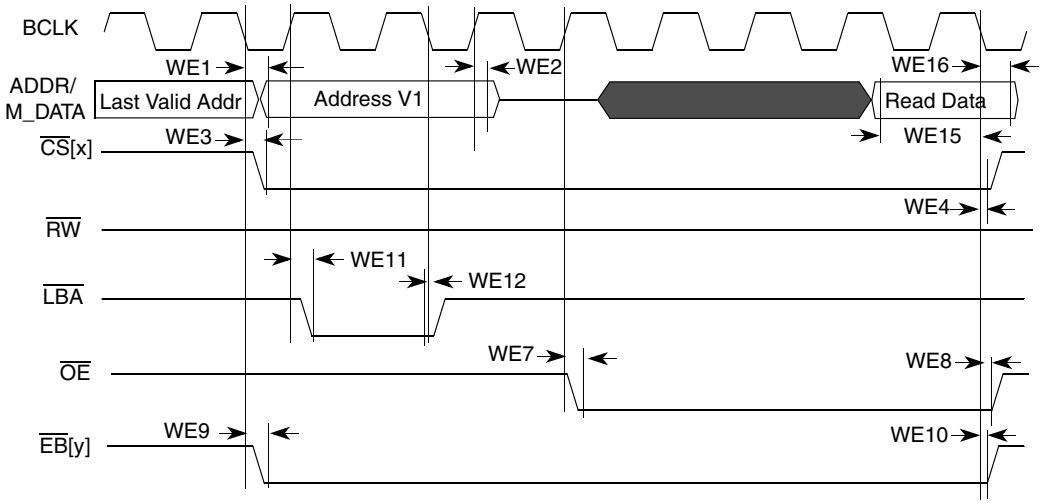

Figure 33. Muxed A/D Mode Timing Diagram for Asynchronous Read Access—WSC=7, LBA=1, LBN=1, LAH=1, OEA=7

4.3.9.3 ESDCTL Electrical Specifications

Figure 34, Figure 35, Figure 36, Figure 37, Figure 38, and Figure 39 depict the timings pertaining to the ESDCTL module, which interfaces Mobile DDR or SDR SDRAM. Table 34, Table 35, Table 36, Table 37, Table 38, and Table 39 list the timing parameters.

Because of an order from the United States International Trade Commission, BGA-packaged product lines and part numbers indicated here currently are not available from Freescale for import or sale in the United States prior to September 2010: i.MX31 Product Family

Downloaded from Arrow.com.

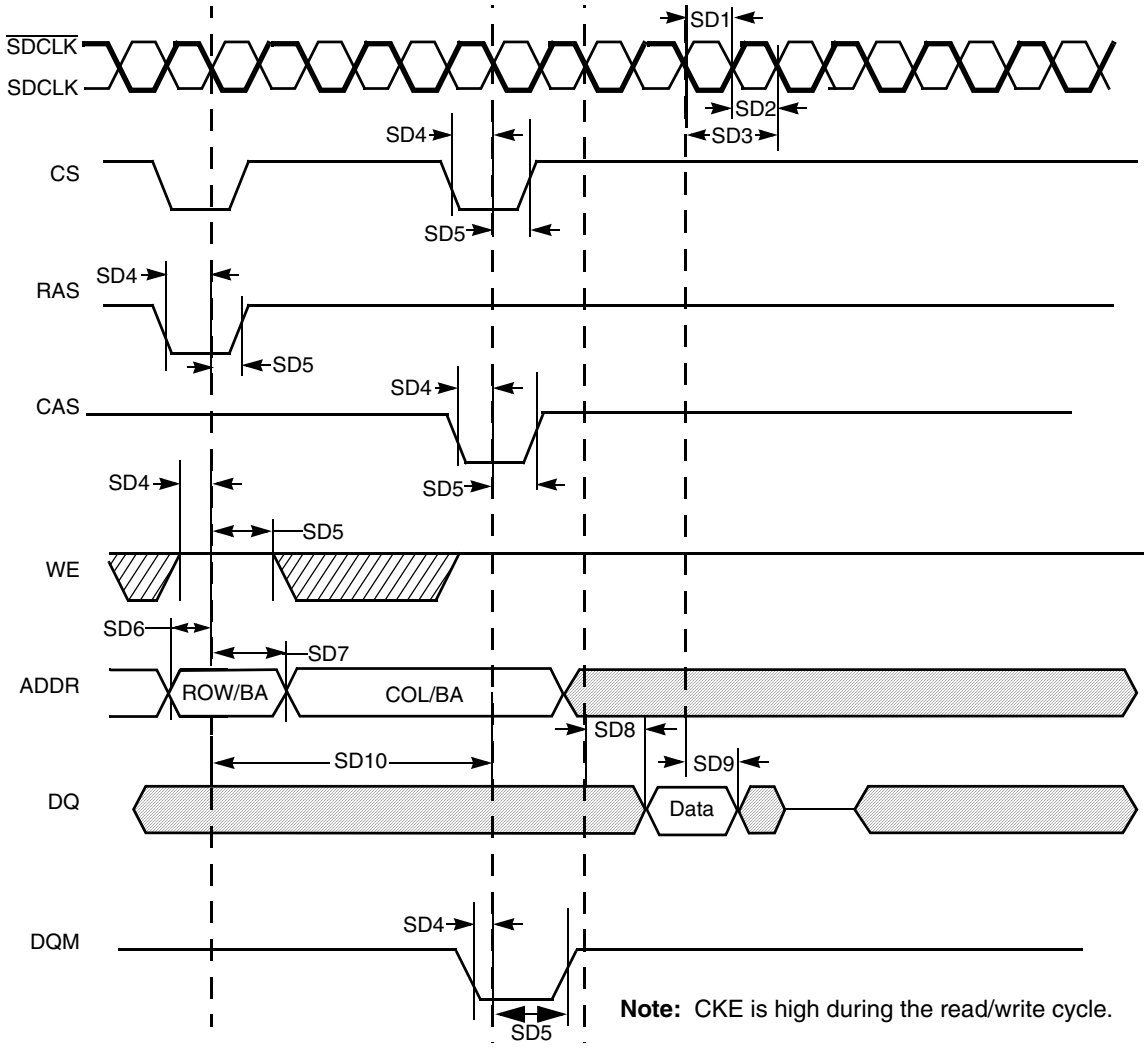

Figure 34. SDRAM Read Cycle Timing Diagram

Table 34. DDR/SDR SDRAM Read Cycle Timing Parameters

ID	Parameter	Symbol	Min	Max	Unit
SD1	SDRAM clock high-level width	tCH	3.4	4.1	ns
SD2	SDRAM clock low-level width	tCL	3.4	4.1	ns
SD3	SDRAM clock cycle time	tCK	7.5	—	ns
SD4	CS, RAS, CAS, WE, DQM, CKE setup time	tCMS	2.0	—	ns
SD5	CS, RAS, CAS, WE, DQM, CKE hold time	tCMH	1.8	—	ns
SD6	Address setup time	tAS	2.0	—	ns
SD7	Address hold time	tAH	1.8	—	ns
SD8	SDRAM access time	tAC	—	6.47	ns

Because of an order from the United States International Trade Commission, BGA-packaged product lines and part numbers indicated here currently are not available from Freescale for import or sale in the United States prior to September 2010: i.MX31 Product Family

Downloaded from Arrow.com.

Table 34. DDR/SDR SDRAM Read Cycle Timing Parameters (continued)

ID	Parameter	Symbol	Min	Max	Unit
SD9	Data out hold time[1]	tOH	1.8	—	ns
SD10	Active to read/write command period	tRC	10	—	clock

[1] Timing parameters are relevant only to SDR SDRAM. For the specific DDR SDRAM data related timing parameters, see Table 38 and Table 39.

NOTE

SDR SDRAM CLK parameters are being measured from the 50% point—that is, high is defined as 50% of signal value and low is defined as 50% of signal value. SD1 + SD2 does not exceed 7.5 ns for 133 MHz.

The timing parameters are similar to the ones used in SDRAM data sheets—that is, Table 34 indicates SDRAM requirements. All output signals are driven by the ESDCTL at the negative edge of SDCLK and the parameters are measured at maximum memory frequency.

Because of an order from the United States International Trade Commission, BGA-packaged product lines and part numbers indicated here currently are not available from Freescale for import or sale in the United States prior to September 2010: i.MX31 Product Family

Downloaded from Arrow.com.

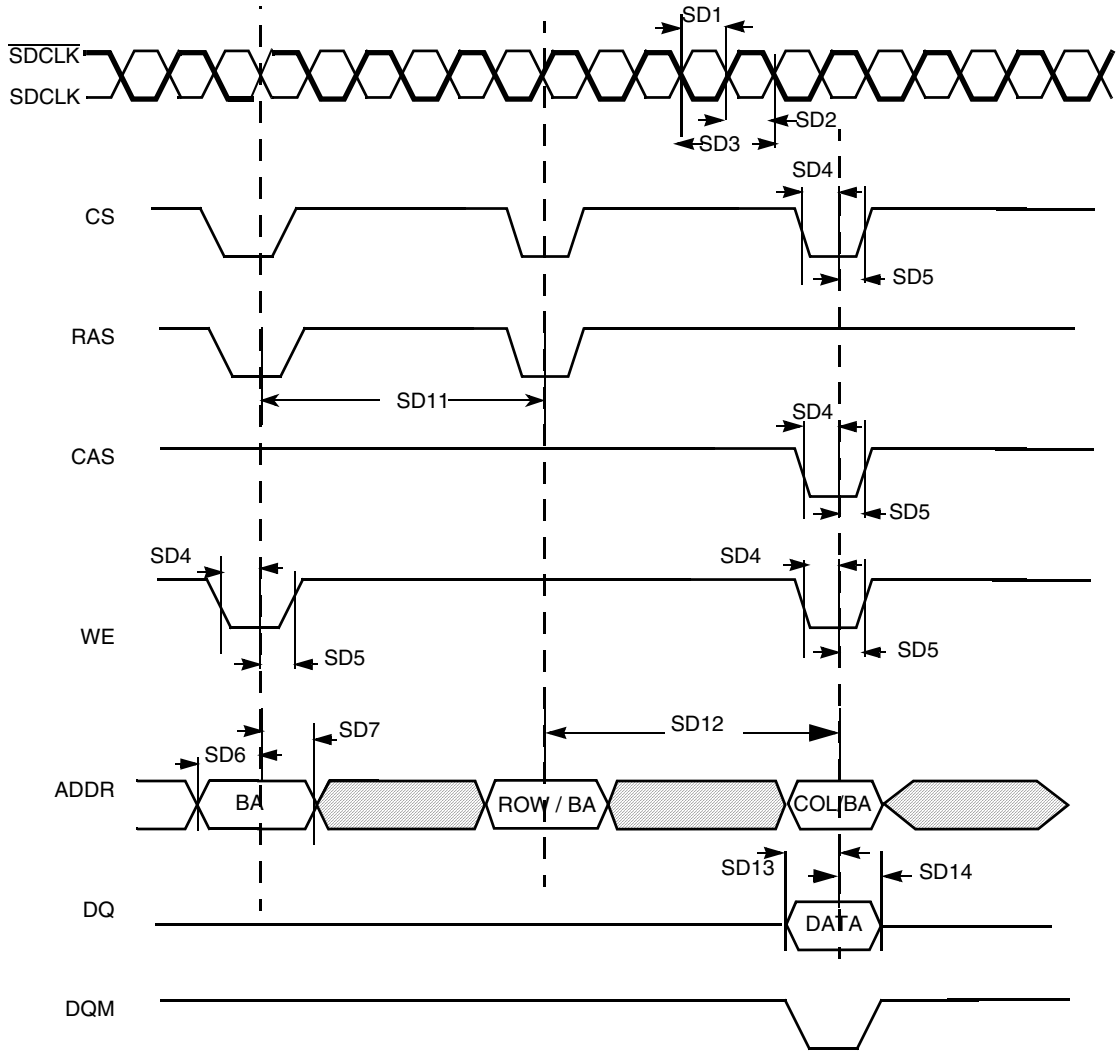

Figure 35. SDR SDRAM Write Cycle Timing Diagram

Table 35. SDR SDRAM Write Timing Parameters

ID	Parameter	Symbol	Min	Max	Unit
SD1	SDRAM clock high-level width	tCH	3.4	4.1	ns
SD2	SDRAM clock low-level width	tCL	3.4	4.1	ns
SD3	SDRAM clock cycle time	tCK	7.5	—	ns
SD4	CS, RAS, CAS, WE, DQM, CKE setup time	tCMS	2.0	—	ns
SD5	CS, RAS, CAS, WE, DQM, CKE hold time	tCMH	1.8	—	ns
SD6	Address setup time	tAS	2.0	—	ns
SD7	Address hold time	tAH	1.8	—	ns
SD11	Precharge cycle period[1]	tRP	1	4	clock
SD12	Active to read/write command delay[1]	tRCD	1	8	clock

Because of an order from the United States International Trade Commission, BGA-packaged product lines and part numbers indicated here currently are not available from Freescale for import or sale in the United States prior to September 2010: i.MX31 Product Family

Downloaded from Arrow.com.

Table 35. SDR SDRAM Write Timing Parameters (continued)

ID	Parameter	Symbol	Min	Max	Unit
SD13	Data setup time	tDS	2.0	—	ns
SD14	Data hold time	tDH	1.3	—	ns

[1] SD11 and SD12 are determined by SDRAM controller register settings.

NOTE

SDR SDRAM CLK parameters are being measured from the 50% point—that is, high is defined as 50% of signal value and low is defined as 50% of signal value.

The timing parameters are similar to the ones used in SDRAM data sheets—that is, Table 35 indicates SDRAM requirements. All output signals are driven by the ESDCTL at the negative edge of SDCLK and the parameters are measured at maximum memory frequency.

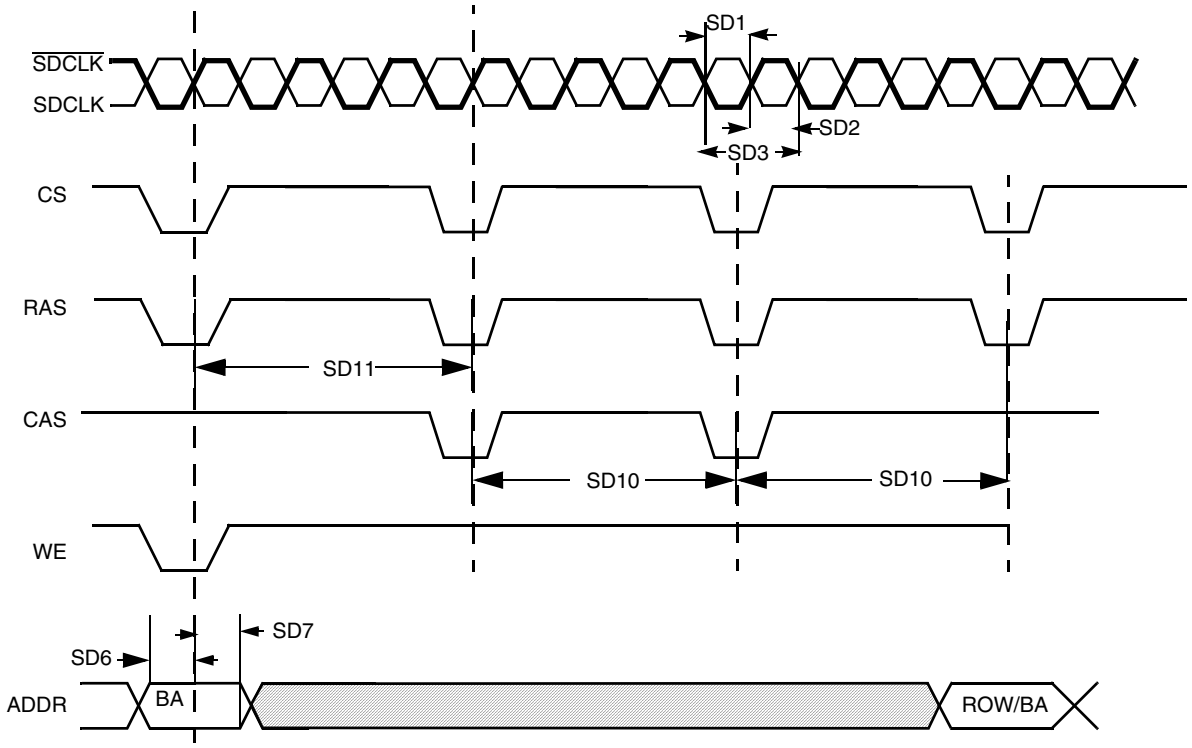

Figure 36. SDRAM Refresh Timing Diagram

Table 36. SDRAM Refresh Timing Parameters

ID	Parameter	Symbol	Min	Max	Unit
SD1	SDRAM clock high-level width	tCH	3.4	4.1	ns
SD2	SDRAM clock low-level width	tCL	3.4	4.1	ns

Because of an order from the United States International Trade Commission, BGA-packaged product lines and part numbers indicated here currently are not available from Freescale for import or sale in the United States prior to September 2010: i.MX31 Product Family

Downloaded from Arrow.com.

Table 36. SDRAM Refresh Timing Parameters (continued)

ID	Parameter	Symbol	Min	Max	Unit
SD3	SDRAM clock cycle time	tCK	7.5	—	ns
SD6	Address setup time	tAS	1.8	—	ns
SD7	Address hold time	tAH	1.8	—	ns
SD10	Precharge cycle period[1]	tRP	1	4	clock
SD11	Auto precharge command period[1]	tRC	2	20	clock

[1] SD10 and SD11 are determined by SDRAM controller register settings.

NOTE

SDR SDRAM CLK parameters are being measured from the 50% point—that is, high is defined as 50% of signal value and low is defined as 50% of signal value.

The timing parameters are similar to the ones used in SDRAM data sheets—that is, Table 36 indicates SDRAM requirements. All output signals are driven by the ESDCTL at the negative edge of SDCLK and the parameters are measured at maximum memory frequency.

Because of an order from the United States International Trade Commission, BGA-packaged product lines and part numbers indicated here currently are not available from Freescale for import or sale in the United States prior to September 2010: i.MX31 Product Family

Downloaded from Arrow.com.

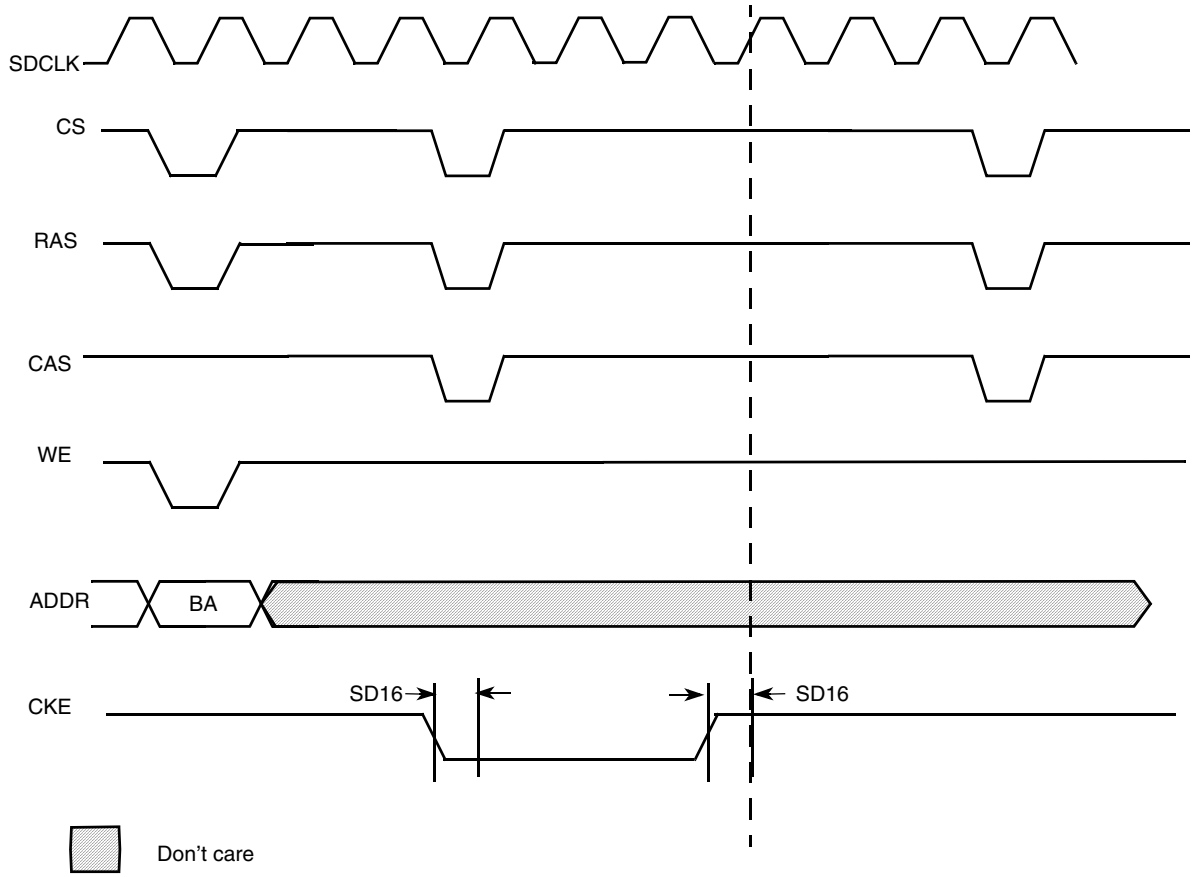

Figure 37. SDRAM Self-Refresh Cycle Timing Diagram

NOTE

The clock will continue to run unless both CKEs are low. Then the clock will be stopped in low state.

Table 37. SDRAM Self-Refresh Cycle Timing Parameters

ID	Parameter	Symbol	Min	Max	Unit
SD16	CKE output delay time	tCKS	1.8	—	ns

Because of an order from the United States International Trade Commission, BGA-packaged product lines and part numbers indicated here currently are not available from Freescale for import or sale in the United States prior to September 2010: i.MX31 Product Family

Downloaded from Arrow.com.

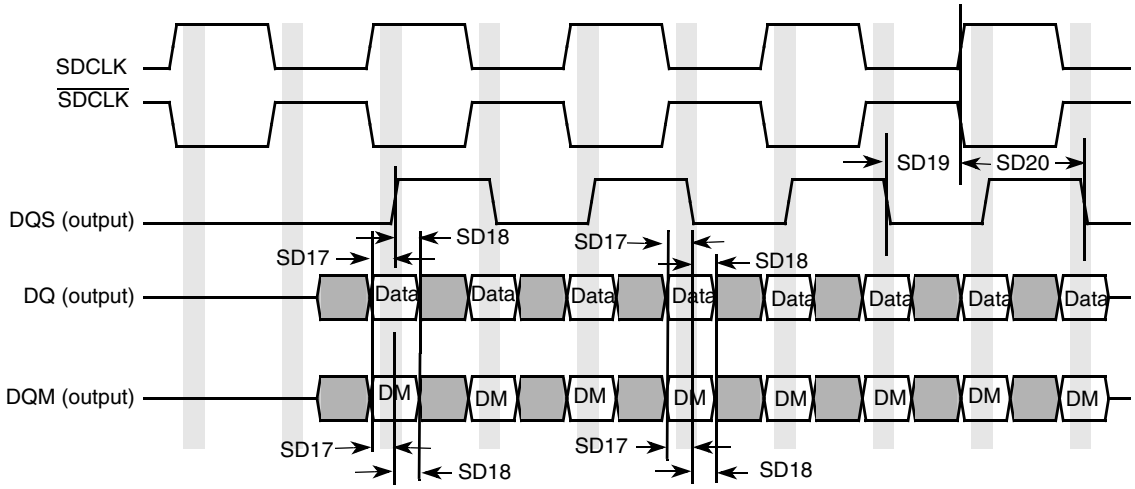

Figure 38. Mobile DDR SDRAM Write Cycle Timing Diagram

Table 38. Mobile DDR SDRAM Write Cycle Timing Parameters[1]

ID	Parameter	Symbol	Min	Max	Unit
SD17	DQ and DQM setup time to DQS	tDS	0.95	—	ns
SD18	DQ and DQM hold time to DQS	tDH	0.95	—	ns
SD19	Write cycle DQS falling edge to SDCLK output delay time.	tDSS	1.8	—	ns
SD20	Write cycle DQS falling edge to SDCLK output hold time.	tDSH	1.8	—	ns

[1] Test condition: Measured using delay line 5 programmed as follows: ESDCDLY5[15:0] = 0x0703.

NOTE

SDRAM CLK and DQS related parameters are being measured from the 50% point—that is, high is defined as 50% of signal value and low is defined as 50% of signal value.

The timing parameters are similar to the ones used in SDRAM data sheets—that is, Table 38 indicates SDRAM requirements. All output signals are driven by the ESDCTL at the negative edge of SDCLK and the parameters are measured at maximum memory frequency.

Because of an order from the United States International Trade Commission, BGA-packaged product lines and part numbers indicated here currently are not available from Freescale for import or sale in the United States prior to September 2010: i.MX31 Product Family

Downloaded from Arrow.com.

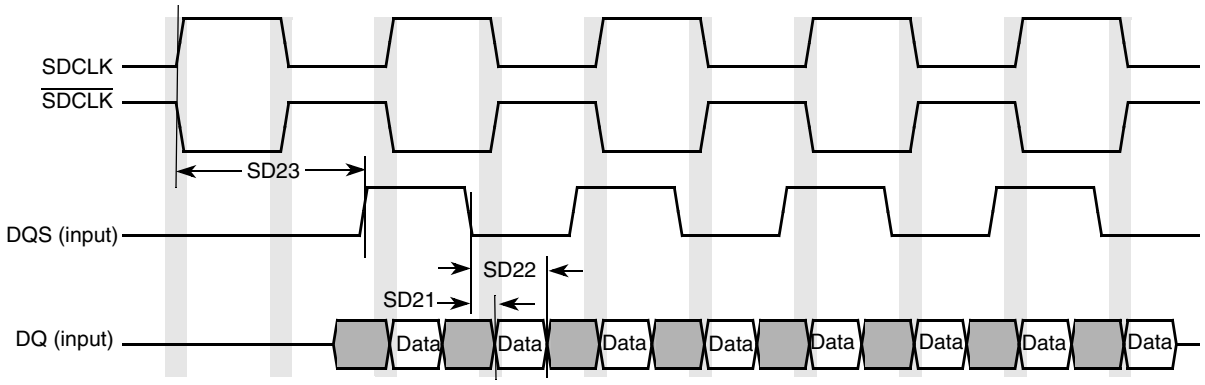

Figure 39. Mobile DDR SDRAM DQ versus DQS and SDCLK Read Cycle Timing Diagram

Table 39. Mobile DDR SDRAM Read Cycle Timing Parameters

ID	Parameter	Symbol	Min	Max	Unit
SD21	DQS – DQ Skew (defines the Data valid window in read cycles related to DQS).	tDQSQ	—	0.85	ns
SD22	DQS DQ HOLD time from DQS	tQH	2.3	—	ns
SD23	DQS output access time from SDCLK posedge	tDQSCK	—	6.7	ns

NOTE

SDRAM CLK and DQS related parameters are being measured from the 50% point—that is, high is defined as 50% of signal value and low is defined as 50% of signal value.

The timing parameters are similar to the ones used in SDRAM data sheets—that is, Table 39 indicates SDRAM requirements. All output signals are driven by the ESDCTL at the negative edge of SDCLK and the parameters are measured at maximum memory frequency.

4.3.10 ETM Electrical Specifications

ETM is an ARM protocol. The timing specifications in this section are given as a guide for a TPA that supports TRACECLK frequencies up to 133 MHz.

Figure 40 depicts the TRACECLK timings of ETM, and Table 40 lists the timing parameters.

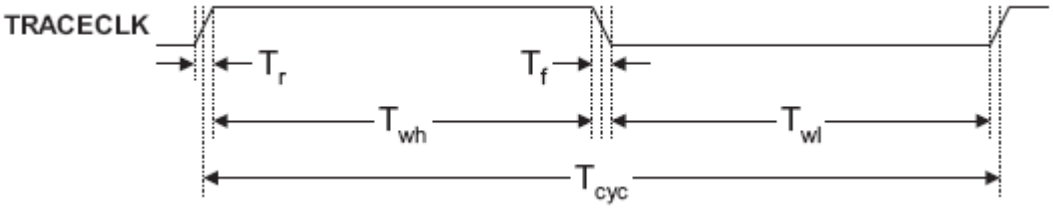

Figure 40. ETM TRACECLK Timing Diagram

Because of an order from the United States International Trade Commission, BGA-packaged product lines and part numbers indicated here currently are not available from Freescale for import or sale in the United States prior to September 2010: i.MX31 Product Family

Downloaded from Arrow.com.

Table 40. ETM TRACECLK Timing Parameters

ID	Parameter	Min	Max	Unit
T_{cyc}	Clock period	Frequency dependent	—	ns
T_{wl}	Low pulse width	2	—	ns
T_{wh}	High pulse width	2	—	ns
T_r	Clock and data rise time	—	3	ns
T_f	Clock and data fall time	—	3	ns

Figure 41 depicts the setup and hold requirements of the trace data pins with respect to TRACECLK, and Table 41 lists the timing parameters.

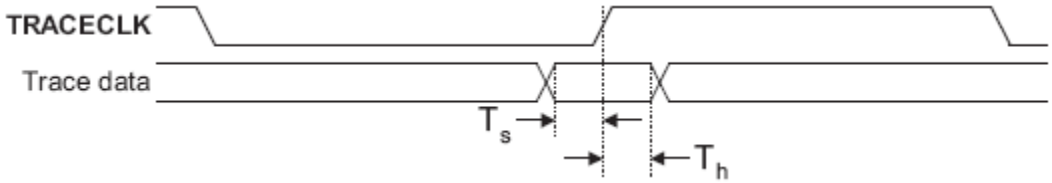

Figure 41. Trace Data Timing Diagram

Table 41. ETM Trace Data Timing Parameters

ID	Parameter	Min	Max	Unit
T_s	Data setup	2	—	ns
T_h	Data hold	1	—	ns

4.3.10.1 Half-Rate Clocking Mode

When half-rate clocking is used, the trace data signals are sampled by the TPA on both the rising and falling edges of TRACECLK, where TRACECLK is half the frequency of the clock shown in Figure 41.

4.3.11 FIR Electrical Specifications

FIR implements asynchronous infrared protocols (FIR, MIR) that are defined by IrDA® (Infrared Data Association). Refer to http://www.IrDA.org for details on FIR and MIR protocols.

4.3.12 Fusebox Electrical Specifications

Table 42. Fusebox Timing Characteristics

Ref. Num	Description	Symbol	Minimum	Typical	Maximum	Units
1	Program time for eFuse[1]	$t_{program}$	125	—	—	µs

[1] The program length is defined by the value defined in the epm_pgm_length[2:0] bits of the IIM module. The value to program is based on a 32 kHz clock source (4 * 1/32 kHz = 125 µs).

Because of an order from the United States International Trade Commission, BGA-packaged product lines and part numbers indicated here currently are not available from Freescale for import or sale in the United States prior to September 2010: i.MX31 Product Family

Downloaded from Arrow.com.

4.3.13 I²C Electrical Specifications

This section describes the electrical information of the I²C Module.

4.3.13.1 I²C Module Timing

Figure 42 depicts the timing of I²C module. Table 43 lists the I²C module timing parameters where the I/O supply is 2.7 V. 1

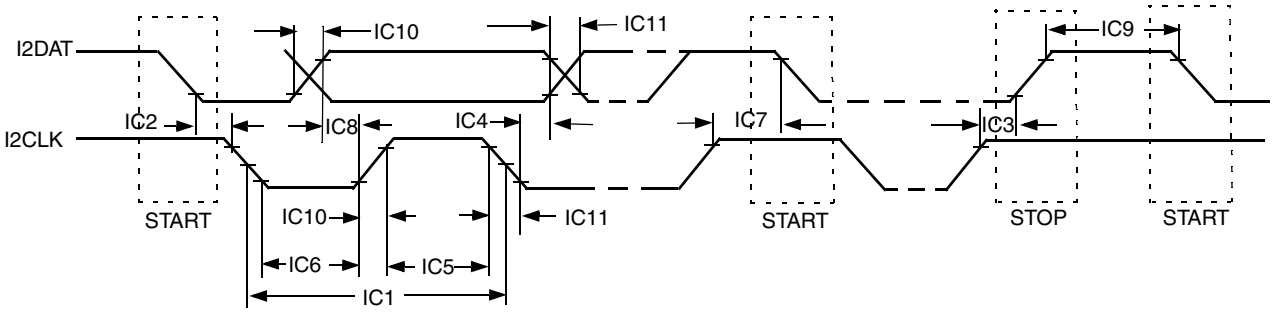

Figure 42. I²C Bus Timing Diagram

Table 43. I²C Module Timing Parameters—I²C Pin I/O Supply=2.7 V

ID	Parameter	Standard Mode		Fast Mode		Unit
		Min	Max	Min	Max	
IC1	I2CLK cycle time	10	—	2.5	—	µs
IC2	Hold time (repeated) START condition	4.0	—	0.6	—	µs
IC3	Set-up time for STOP condition	4.0	—	0.6	—	µs
IC4	Data hold time	0[1]	3.45[2]	0[1]	0.9[2]	µs
IC5	HIGH Period of I2CLK Clock	4.0	—	0.6	—	µs
IC6	LOW Period of the I2CLK Clock	4.7	—	1.3	—	µs
IC7	Set-up time for a repeated START condition	4.7	—	0.6	—	µs
IC8	Data set-up time	250	—	100[3]	—	ns
IC9	Bus free time between a STOP and START condition	4.7	—	1.3	—	µs
IC10	Rise time of both I2DAT and I2CLK signals	—	1000	$20+0.1C_b$[4]	300	ns
IC11	Fall time of both I2DAT and I2CLK signals	—	300	$20+0.1C_b$[4]	300	ns
IC12	Capacitive load for each bus line (C_b)	—	400	—	400	pF

1 A device must internally provide a hold time of at least 300 ns for I2DAT signal in order to bridge the undefined region of the falling edge of I2CLK.

2 The maximum hold time has to be met only if the device does not stretch the LOW period (ID IC6) of the I2CLK signal.

3 A Fast-mode I²C-bus device can be used in a standard-mode I²C-bus system, but the requirement of set-up time (ID IC7) of 250 ns must then be met. This will automatically be the case if the device does not stretch the LOW period of the I2CLK signal. If such a device does stretch the LOW period of the I2CLK signal, it must output the next data bit to the I2DAT line max_rise_time (ID No IC10) + data_setup_time (ID No IC8) = 1000 + 250 = 1250 ns (according to the Standard-mode I²C-bus specification) before the I2CLK line is released.

4 C_b = total capacitance of one bus line in pF.

Because of an order from the United States International Trade Commission, BGA-packaged product lines and part numbers indicated here currently are not available from Freescale for import or sale in the United States prior to September 2010: i.MX31 Product Family

Downloaded from Arrow.com.

4.3.14 IPU—Sensor Interfaces

4.3.14.1 Supported Camera Sensors

Table 44 lists the known supported camera sensors at the time of publication.

Table 44. Supported Camera Sensors[1]

Vendor	Model
Conexant	CX11646, CX20490[2], CX20450[2]
Agilant	HDCP–2010, ADCS–1021[2], ADCS–1021[2]
Toshiba	TC90A70
ICMedia	ICM202A, ICM102[2]
iMagic	IM8801
Transchip	TC5600, TC5600J, TC5640, TC5700, TC6000
Fujitsu	MB86S02A
Micron	MI–SOC–0133
Matsushita	MN39980
STMicro	W6411, W6500, W6501[2], W6600[2], W6552[2], STV0974[2]
OmniVision	OV7620, OV6630
Sharp	LZ0P3714 (CCD)
Motorola	MC30300 (Python)[2], SCM20014[2], SCM20114[2], SCM22114[2], SCM20027[2]
National Semiconductor	LM9618[2]

1 Freescale Semiconductor does not recommend one supplier over another and in no way suggests that these are the only camera suppliers.

2 These sensors not validated at time of publication.

4.3.14.2 Functional Description

There are three timing modes supported by the IPU.

4.3.14.2.1 Pseudo BT.656 Video Mode

Smart camera sensors, which include imaging processing, usually support video mode transfer. They use an embedded timing syntax to replace the SENSB_VSYNC and SENSB_HSYNC signals. The timing syntax is defined by the BT.656 standard.

This operation mode follows the recommendations of ITU BT.656 specifications. The only control signal used is SENSB_PIX_CLK. Start-of-frame and active-line signals are embedded in the data stream. An active line starts with a SAV code and ends with a EAV code. In some cases, digital blanking is inserted in between EAV and SAV code. The CSI decodes and filters out the timing-coding from the data stream, thus recovering SENSB_VSYNC and SENSB_HSYNC signals for internal use.

Because of an order from the United States International Trade Commission, BGA-packaged product lines and part numbers indicated here currently are not available from Freescale for import or sale in the United States prior to September 2010: i.MX31 Product Family

Downloaded from Arrow.com.

4.3.14.2.2 Gated Clock Mode

The SENSB_VSYNC, SENSB_HSYNC, and SENSB_PIX_CLK signals are used in this mode. See Figure 43.

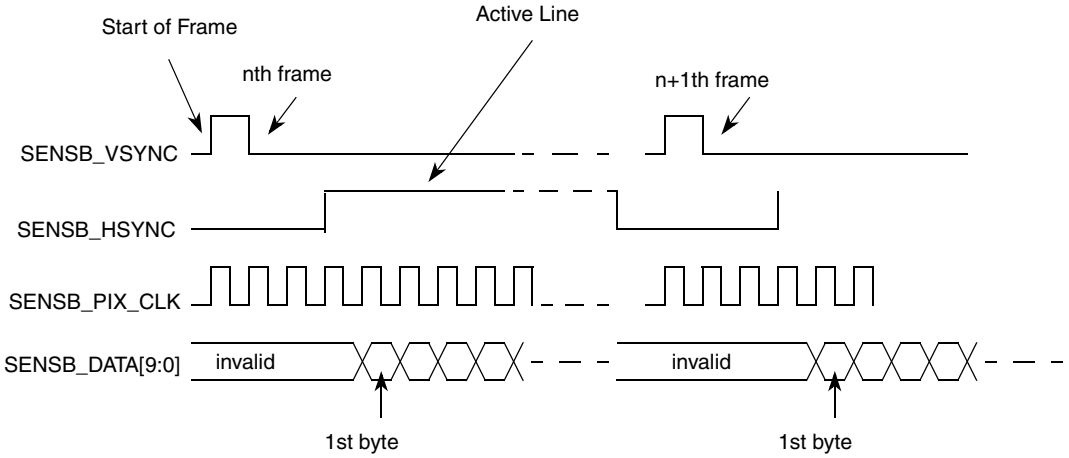

Figure 43. Gated Clock Mode Timing Diagram

A frame starts with a rising edge on SENSB_VSYNC (all the timings correspond to straight polarity of the corresponding signals). Then SENSB_HSYNC goes to high and hold for the entire line. Pixel clock is valid as long as SENSB_HSYNC is high. Data is latched at the rising edge of the valid pixel clocks. SENSB_HSYNC goes to low at the end of line. Pixel clocks then become invalid and the CSI stops receiving data from the stream. For next line the SENSB_HSYNC timing repeats. For next frame the SENSB_VSYNC timing repeats.

4.3.14.2.3 Non-Gated Clock Mode

The timing is the same as the gated-clock mode (described in Section 4.3.14.2.2, “Gated Clock Mode”), except for the SENSB_HSYNC signal, which is not used. See Figure 44. All incoming pixel clocks are valid and will cause data to be latched into the input FIFO. The SENSB_PIX_CLK signal is inactive (states low) until valid data is going to be transmitted over the bus.

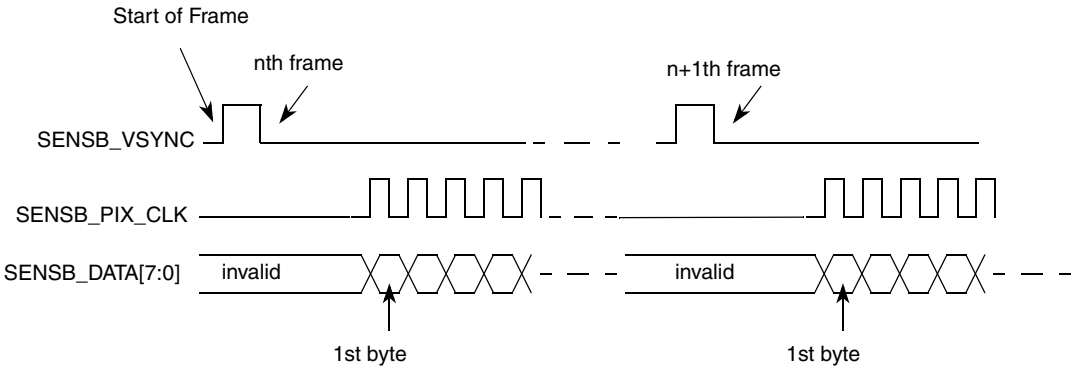

Figure 44. Non-Gated Clock Mode Timing Diagram

Because of an order from the United States International Trade Commission, BGA-packaged product lines and part numbers indicated here currently are not available from Freescale for import or sale in the United States prior to September 2010: i.MX31 Product Family

Downloaded from Arrow.com.

The timing described in Figure 44 is that of a Motorola sensor. Some other sensors may have a slightly different timing. The CSI can be programmed to support rising/falling-edge triggered SENSB_VSYNC; active-high/low SENSB_HSYNC; and rising/falling-edge triggered SENSB_PIX_CLK.

4.3.14.3 Electrical Characteristics

Figure 45 depicts the sensor interface timing, and Table 45 lists the timing parameters.

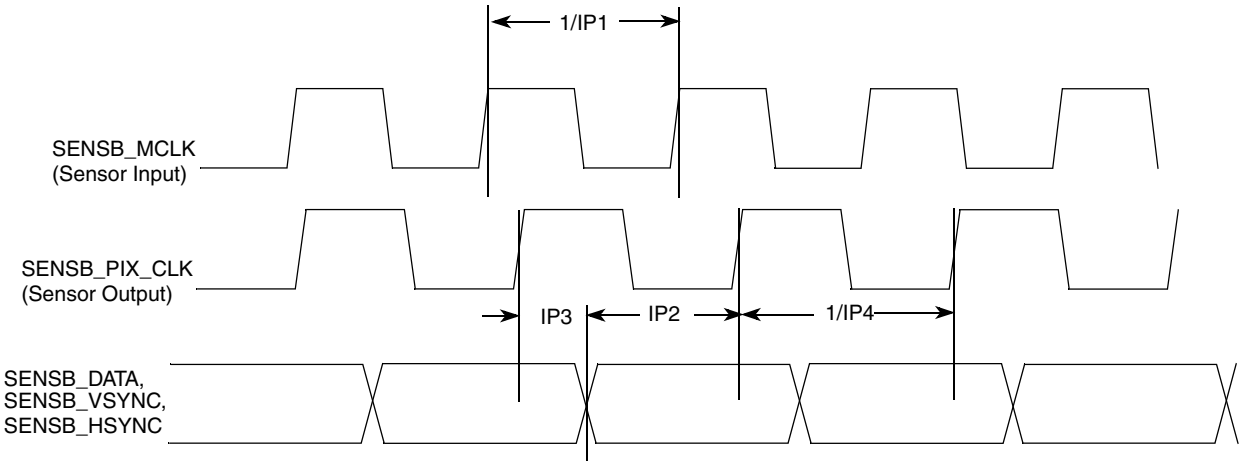

Figure 45. Sensor Interface Timing Diagram

Table 45. Sensor Interface Timing Parameters[1]

ID	Parameter	Symbol	Min.	Max.	Units
IP1	Sensor input clock frequency	Fmck	0.01	133	MHz
IP2	Data and control setup time	Tsu	5	—	ns
IP3	Data and control holdup time	Thd	3	—	ns
IP4	Sensor output (pixel) clock frequency	Fpck	0.01	133	MHz

[1] The timing specifications for Figure 45 are referenced to the rising edge of SENS_PIX_CLK when the SENS_PIX_CLK_POL bit in the CSI_SENS_CONF register is cleared. When the SENS_PIX_CLK_POL is set, the clock is inverted and all timing specifications will remain the same but are referenced to the falling edge of the clock.

4.3.15 IPU–Display Interfaces

4.3.15.1 Supported Display Components

Table 46 lists the known supported display components at the time of publication.

Because of an order from the United States International Trade Commission, BGA-packaged product lines and part numbers indicated here currently are not available from Freescale for import or sale in the United States prior to September 2010: i.MX31 Product Family

Downloaded from Arrow.com.

Table 46. Supported Display Components[1]

Type	Vendor	Model
TFT displays (memory-less)	Sharp (HR-TFT Super Mobile LCD family)	LQ035Q7 DB02, LM019LC1Sxx
	Samsung (QCIF and QVGA TFT modules for mobile phones)	LTS180S1-HF1, LTS180S3-HF1, LTS350Q1-PE1, LTS350Q1-PD1, LTS220Q1-HE1[2]
	Toshiba (LTM series)	LTM022P806[2], LTM04C380K[2], LTM018A02A[2], LTM020P332[2], LTM021P337[2], LTM019P334[2], LTM022A783[2], LTM022A05ZZ[2]
	NEC	NL6448BC20-08E, NL8060BC31-27
Display controllers	Epson	S1D15xxx series, S1D19xxx series, S1D13713, S1D13715
	Solomon Systech	SSD1301 (OLED), SSD1828 (LDCD)
	Hitachi	HD66766, HD66772
	ATI	W2300
Smart display modules	Epson	L1F10043 T[2], L1F10044 T[2], L1F10045 T[2], L2D22002[2], L2D20014[2], L2F50032[2], L2D25001 T[2]
	Hitachi	120 160 65K/4096 C-STN (#3284 LTD-1398-2) based on HD 66766 controller
	Densitron Europe LTD	All displays with MPU 80/68K series interface and serial peripheral interface
	Sharp	LM019LC1Sxx
	Sony	ACX506AKM
Digital video encoders (for TV)	Analog Devices	ADV7174/7179
	Crystal (Cirrus Logic)	CS49xx series
	Focus	FS453/4

1 Freescale Semiconductor does not recommend one supplier over another and in no way suggests that these are the only display component suppliers.

2 These display components not validated at time of publication.

4.3.15.2 Synchronous Interfaces

4.3.15.2.1 Interface to Active Matrix TFT LCD Panels, Functional Description

Figure 46 depicts the LCD interface timing for a generic active matrix color TFT panel. In this figure signals are shown with negative polarity. The sequence of events for active matrix interface timing is:

- DISPB_D3_CLK latches data into the panel on its negative edge (when positive polarity is selected). In active mode, DISPB_D3_CLK runs continuously.
- DISPB_D3_HSYNC causes the panel to start a new line.
- DISPB_D3_VSYNC causes the panel to start a new frame. It always encompasses at least one HSYNC pulse.

Because of an order from the United States International Trade Commission, BGA-packaged product lines and part numbers indicated here currently are not available from Freescale for import or sale in the United States prior to September 2010: i.MX31 Product Family

Downloaded from Arrow.com.

- DISPB_D3_DRDY acts like an output enable signal to the CRT display. This output enables the data to be shifted onto the display. When disabled, the data is invalid and the trace is off.

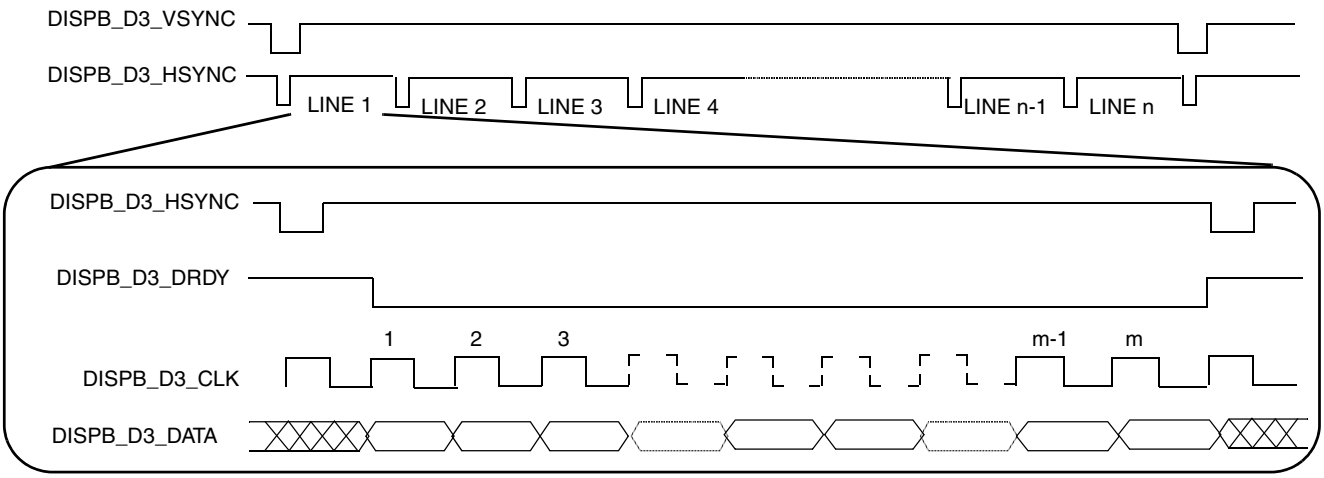

Figure 46. Interface Timing Diagram for TFT (Active Matrix) Panels

4.3.15.2.2 Interface to Active Matrix TFT LCD Panels, Electrical Characteristics

Figure 47 depicts the horizontal timing (timing of one line), including both the horizontal sync pulse and the data. All figure parameters shown are programmable. The timing images correspond to inverse polarity of the DISPB_D3_CLK signal and active-low polarity of the DISPB_D3_HSYNC, DISPB_D3_VSYNC and DISPB_D3_DRDY signals.

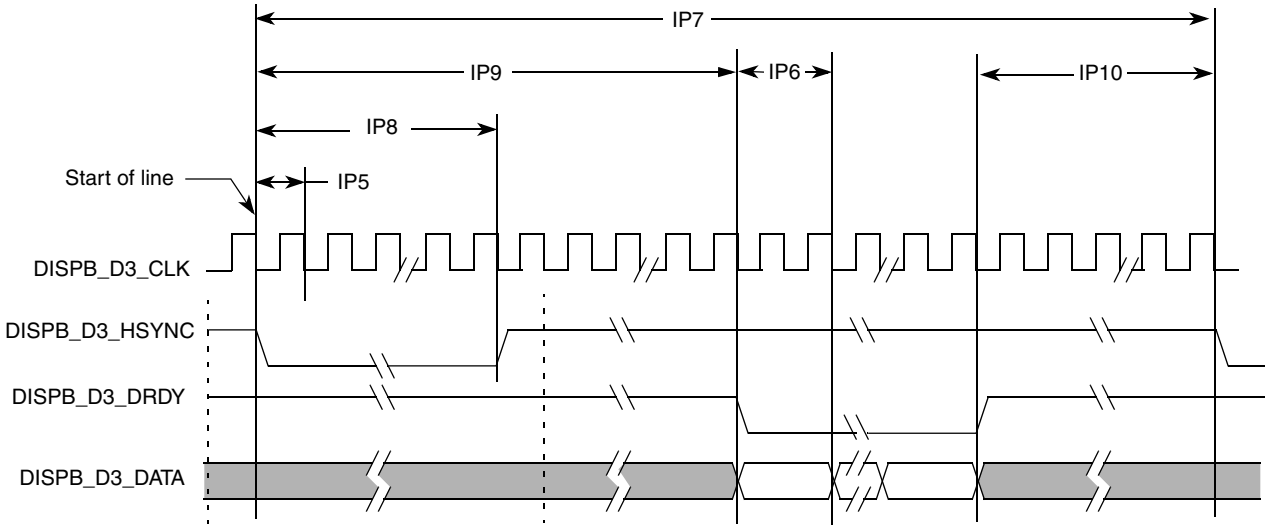

Figure 47. TFT Panels Timing Diagram—Horizontal Sync Pulse

Figure 48 depicts the vertical timing (timing of one frame). All figure parameters shown are programmable.

Because of an order from the United States International Trade Commission, BGA-packaged product lines and part numbers indicated here currently are not available from Freescale for import or sale in the United States prior to September 2010: i.MX31 Product Family

Downloaded from Arrow.com.

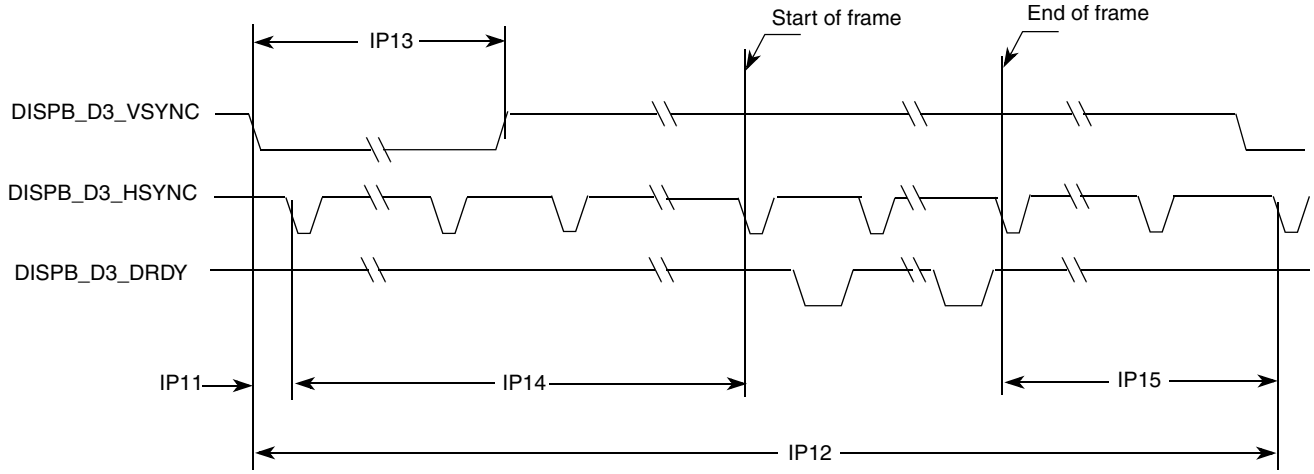

Figure 48. TFT Panels Timing Diagram—Vertical Sync Pulse

Table 47 shows timing parameters of signals presented in Figure 47 and Figure 48.

Table 47. Synchronous Display Interface Timing Parameters—Pixel Level

ID	Parameter	Symbol	Value	Units
IP5	Display interface clock period	Tdicp	Tdicp[1]	ns
IP6	Display pixel clock period	Tdpcp	(DISP3_IF_CLK_CNT_D+1) * Tdicp	ns
IP7	Screen width	Tsw	(SCREEN_WIDTH+1) * Tdpcp	ns
IP8	HSYNC width	Thsw	(H_SYNC_WIDTH+1) * Tdpcp	ns
IP9	Horizontal blank interval 1	Thbi1	BGXP * Tdpcp	ns
IP10	Horizontal blank interval 2	Thbi2	(SCREEN_WIDTH – BGXP – FW) * Tdpcp	ns
IP11	HSYNC delay	Thsd	H_SYNC_DELAY * Tdpcp	ns
IP12	Screen height	Tsh	(SCREEN_HEIGHT+1) * Tsw	ns
IP13	VSYNC width	Tvsw	if V_SYNC_WIDTH_L = 0 than (V_SYNC_WIDTH+1) * Tdpcp else (V_SYNC_WIDTH+1) * Tsw	ns
IP14	Vertical blank interval 1	Tvbi1	BGYP * Tsw	ns
IP15	Vertical blank interval 2	Tvbi2	(SCREEN_HEIGHT – BGYP – FH) * Tsw	ns

[1] Display interface clock period immediate value.

$$\mathrm{Tdicp} = \begin{cases} T_{HSP_CLK} \cdot \dfrac{DISP3_IF_CLK_PER_WR}{HSP_CLK_PERIOD}, & \text{for integer } \dfrac{DISP3_IF_CLK_PER_WR}{HSP_CLK_PERIOD} \\ T_{HSP_CLK} \cdot \left(\mathrm{floor}\left[\dfrac{DISP3_IF_CLK_PER_WR}{HSP_CLK_PERIOD}\right] + 0.5 \pm 0.5\right), & \text{for fractional } \dfrac{DISP3_IF_CLK_PER_WR}{HSP_CLK_PERIOD} \end{cases}$$

Display interface clock period average value.

$$\overline{\mathrm{Tdicp}} = T_{HSP_CLK} \cdot \frac{DISP3_IF_CLK_PER_WR}{HSP_CLK_PERIOD}$$

Because of an order from the United States International Trade Commission, BGA-packaged product lines and part numbers indicated here currently are not available from Freescale for import or sale in the United States prior to September 2010: i.MX31 Product Family

Downloaded from Arrow.com.

NOTE

HSP_CLK is the High-Speed Port Clock, which is the input to the Image Processing Unit (IPU). Its frequency is controlled by the Clock Control Module (CCM) settings. The HSP_CLK frequency must be greater than or equal to the AHB clock frequency.

The SCREEN_WIDTH, SCREEN_HEIGHT, H_SYNC_WIDTH, V_SYNC_WIDTH, BGXP, BGYP and V_SYNC_WIDTH_L parameters are programmed via the SDC_HOR_CONF, SDC_VER_CONF, SDC_BG_POS Registers. The FW and FH parameters are programmed for the corresponding DMA channel. The DISP3_IF_CLK_PER_WR, HSP_CLK_PERIOD and DISP3_IF_CLK_CNT_D parameters are programmed via the DI_DISP3_TIME_CONF, DI_HSP_CLK_PER and DI_DISP_ACC_CC Registers.

Figure 49 depicts the synchronous display interface timing for access level, and Table 48 lists the timing parameters. The DISP3_IF_CLK_DOWN_WR and DISP3_IF_CLK_UP_WR parameters are set via the DI_DISP3_TIME_CONF Register.

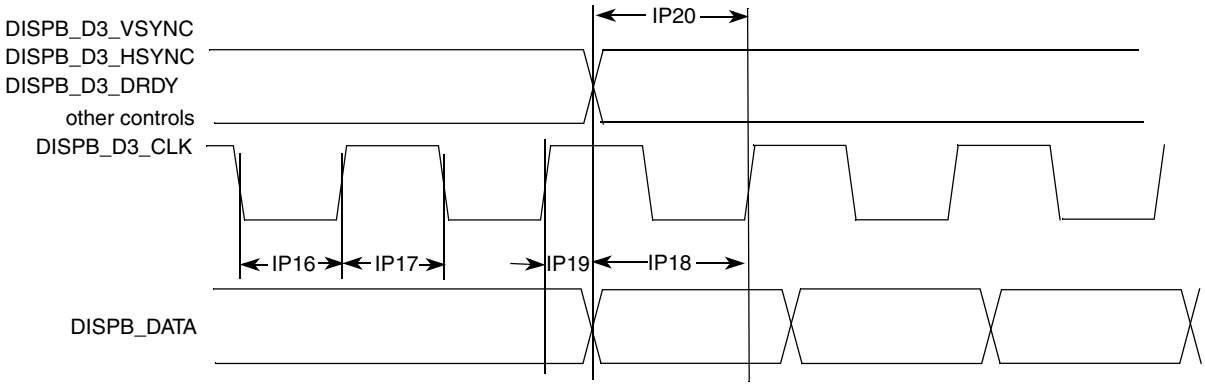

Figure 49. Synchronous Display Interface Timing Diagram—Access Level

Table 48. Synchronous Display Interface Timing Parameters—Access Level

ID	Parameter	Symbol	Min	Typ[1]	Max	Units
IP16	Display interface clock low time	Tckl	Tdicd–Tdicu–1.5	Tdicd[2]–Tdicu[3]	Tdicd–Tdicu+1.5	ns
IP17	Display interface clock high time	Tckh	Tdicp–Tdicd+Tdicu–1.5	Tdicp–Tdicd+Tdicu	Tdicp–Tdicd+Tdicu+1.5	ns
IP18	Data setup time	Tdsu	Tdicd–3.5	Tdicu	—	ns
IP19	Data holdup time	Tdhd	Tdicp–Tdicd–3.5	Tdicp–Tdicu	—	ns
IP20	Control signals setup time to display interface clock	Tcsu	Tdicd–3.5	Tdicu	—	ns

[1] The exact conditions have not been finalized, but will likely match the current customer requirement for their specific display. These conditions may be device specific.

Because of an order from the United States International Trade Commission, BGA-packaged product lines and part numbers indicated here currently are not available from Freescale for import or sale in the United States prior to September 2010: i.MX31 Product Family

Downloaded from Arrow.com.

2 Display interface clock down time

$$Tdicd = \frac{1}{2}T_{HSP_CLK} \cdot ceil\left[\frac{2 \cdot DISP3_IF_CLK_DOWN_WR}{HSP_CLK_PERIOD}\right]$$

3 Display interface clock up time

$$Tdicu = \frac{1}{2}T_{HSP_CLK} \cdot ceil\left[\frac{2 \cdot DISP3_IF_CLK_UP_WR}{HSP_CLK_PERIOD}\right]$$

where CEIL(X) rounds the elements of X to the nearest integers towards infinity.

4.3.15.3 Interface to Sharp HR-TFT Panels

Figure 50 depicts the Sharp HR-TFT panel interface timing, and Table 49 lists the timing parameters. The CLS_RISE_DELAY, CLS_FALL_DELAY, PS_FALL_DELAY, PS_RISE_DELAY, REV_TOGGLE_DELAY parameters are defined in the SDC_SHARP_CONF_1 and SDC_SHARP_CONF_2 registers. For other Sharp interface timing characteristics, refer to Section 4.3.15.2.2, "Interface to Active Matrix TFT LCD Panels, Electrical Characteristics." The timing images correspond to straight polarity of the Sharp signals.

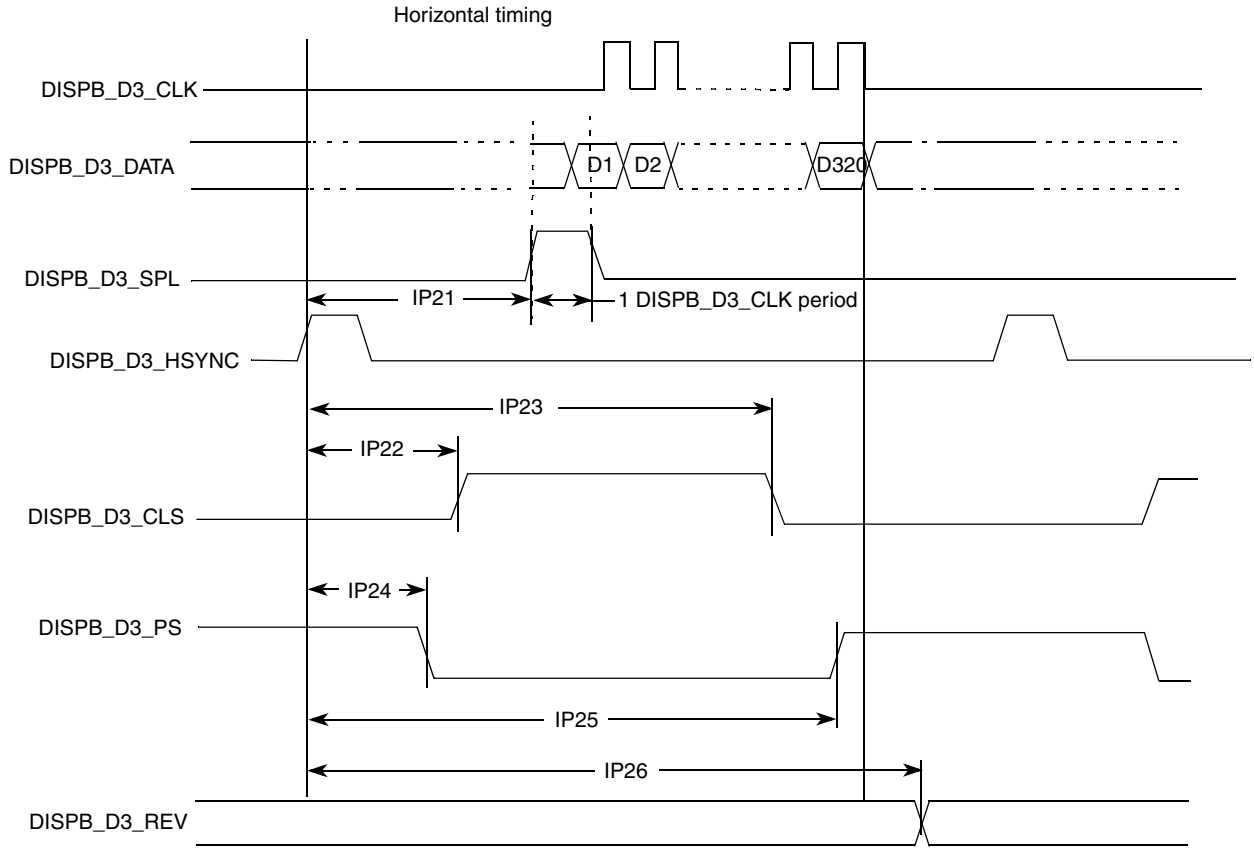

Example is drawn with FW+1=320 pixel/line, FH+1=240 lines.
SPL pulse width is fixed and aligned to the first data of the line.
REV toggles every HSYNC period.

Figure 50. Sharp HR-TFT Panel Interface Timing Diagram—Pixel Level

Because of an order from the United States International Trade Commission, BGA-packaged product lines and part numbers indicated here currently are not available from Freescale for import or sale in the United States prior to September 2010: i.MX31 Product Family

Downloaded from Arrow.com.

Table 49. Sharp Synchronous Display Interface Timing Parameters—Pixel Level

ID	Parameter	Symbol	Value	Units
IP21	SPL rise time	Tsplr	(BGXP – 1) * Tdpcp	ns
IP22	CLS rise time	Tclsr	CLS_RISE_DELAY * Tdpcp	ns
IP23	CLS fall time	Tclsf	CLS_FALL_DELAY * Tdpcp	ns
IP24	CLS rise and PS fall time	Tpsf	PS_FALL_DELAY * Tdpcp	ns
IP25	PS rise time	Tpsr	PS_RISE_DELAY * Tdpcp	ns
IP26	REV toggle time	Trev	REV_TOGGLE_DELAY * Tdpcp	ns

4.3.15.4 Synchronous Interface to Dual-Port Smart Displays

Functionality and electrical characteristics of the synchronous interface to dual-port smart displays are identical to parameters of the synchronous interface. See Section 4.3.15.2.2, "Interface to Active Matrix TFT LCD Panels, Electrical Characteristics."

4.3.15.4.1 Interface to a TV Encoder, Functional Description

The interface has an 8-bit data bus, transferring a single 8-bit value (Y/U/V) in each cycle. The bits D7–D0 of the value are mapped to bits LD17–LD10 of the data bus, respectively. Figure 51 depicts the interface timing,

- The frequency of the clock DISPB_D3_CLK is 27 MHz (within 10%).
- The DISPB_D3_HSYNC, DISPB_D3_VSYNC and DISPB_D3_DRDY signals are active low.
- The transition to the next row is marked by the negative edge of the DISPB_D3_HSYNC signal. It remains low for a single clock cycle.
- The transition to the next field/frame is marked by the negative edge of the DISPB_D3_VSYNC signal. It remains low for at least one clock cycle.
  - At a transition to an odd field (of the next frame), the negative edges of DISPB_D3_VSYNC and DISPB_D3_HSYNC coincide.
  - At a transition to an even field (of the same frame), they do not coincide.
- The active intervals—during which data is transferred—are marked by the DISPB_D3_HSYNC signal being high.

Because of an order from the United States International Trade Commission, BGA-packaged product lines and part numbers indicated here currently are not available from Freescale for import or sale in the United States prior to September 2010: i.MX31 Product Family

Downloaded from Arrow.com.

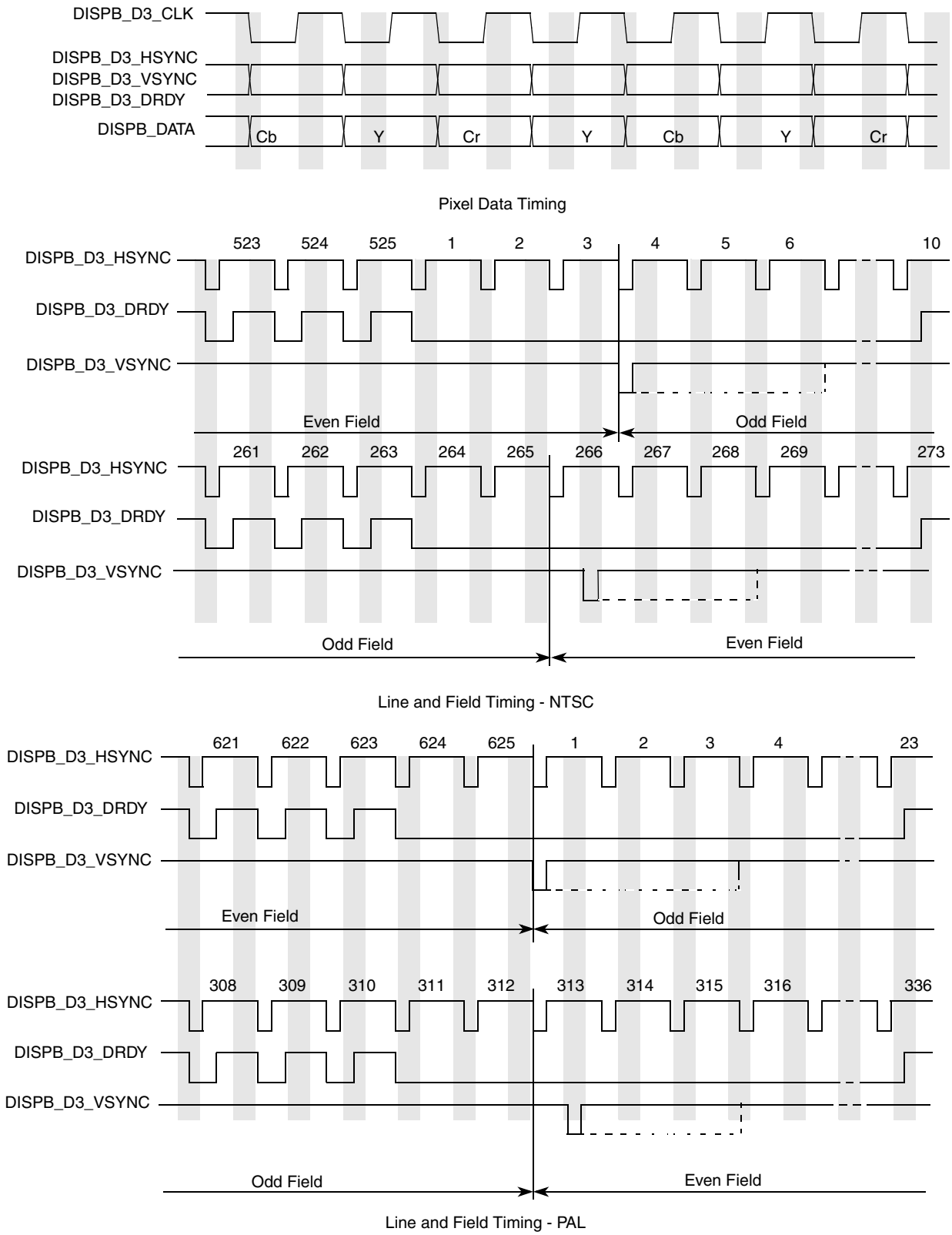

Figure 51. TV Encoder Interface Timing Diagram

Because of an order from the United States International Trade Commission, BGA-packaged product lines and part numbers indicated here currently are not available from Freescale for import or sale in the United States prior to September 2010: i.MX31 Product Family

Downloaded from Arrow.com.

4.3.15.4.2 Interface to a TV Encoder, Electrical Characteristics

The timing characteristics of the TV encoder interface are identical to the synchronous display characteristics. See Section 4.3.15.2.2, "Interface to Active Matrix TFT LCD Panels, Electrical Characteristics."

4.3.15.5 Asynchronous Interfaces

4.3.15.5.1 Parallel Interfaces, Functional Description

The IPU supports the following asynchronous parallel interfaces:

- System 80 interface
  - — Type 1 (sampling with the chip select signal) with and without byte enable signals.
  - — Type 2 (sampling with the read and write signals) with and without byte enable signals.
- System 68k interface
  - — Type 1 (sampling with the chip select signal) with or without byte enable signals.
  - — Type 2 (sampling with the read and write signals) with or without byte enable signals.

For each of four system interfaces, there are three burst modes:

1. Burst mode without a separate clock. The burst length is defined by the corresponding parameters of the IDMAC (when data is transferred from the system memory) of by the HBURST signal (when the MCU directly accesses the display via the slave AHB bus). For system 80 and system 68k type 1 interfaces, data is sampled by the CS signal and other control signals changes only when transfer direction is changed during the burst. For type 2 interfaces, data is sampled by the WR/RD signals (system 80) or by the ENABLE signal (system 68k) and the CS signal stays active during the whole burst.
2. Burst mode with the separate clock DISPB_BCLK. In this mode, data is sampled with the DISPB_BCLK clock. The CS signal stays active during whole burst transfer. Other controls are changed simultaneously with data when the bus state (read, write or wait) is altered. The CS signals and other controls move to non-active state after burst has been completed.
3. Single access mode. In this mode, slave AHB and DMA burst are broken to single accesses. The data is sampled with CS or other controls according the interface type as described above. All controls (including CS) become non-active for one display interface clock after each access. This mode corresponds to the ATI single access mode.

Both system 80 and system 68k interfaces are supported for all described modes as depicted in Figure 52, Figure 53, Figure 54, and Figure 55. These timing images correspond to active-low DISPB_D#_CS, DISPB_D#_WR and DISPB_D#_RD signals.

Additionally, the IPU allows a programmable pause between two burst. The pause is defined in the HSP_CLK cycles. It allows to avoid timing violation between two sequential bursts or two accesses to different displays. The range of this pause is from 4 to 19 HSP_CLK cycles.

Because of an order from the United States International Trade Commission, BGA-packaged product lines and part numbers indicated here currently are not available from Freescale for import or sale in the United States prior to September 2010: i.MX31 Product Family

Downloaded from Arrow.com.

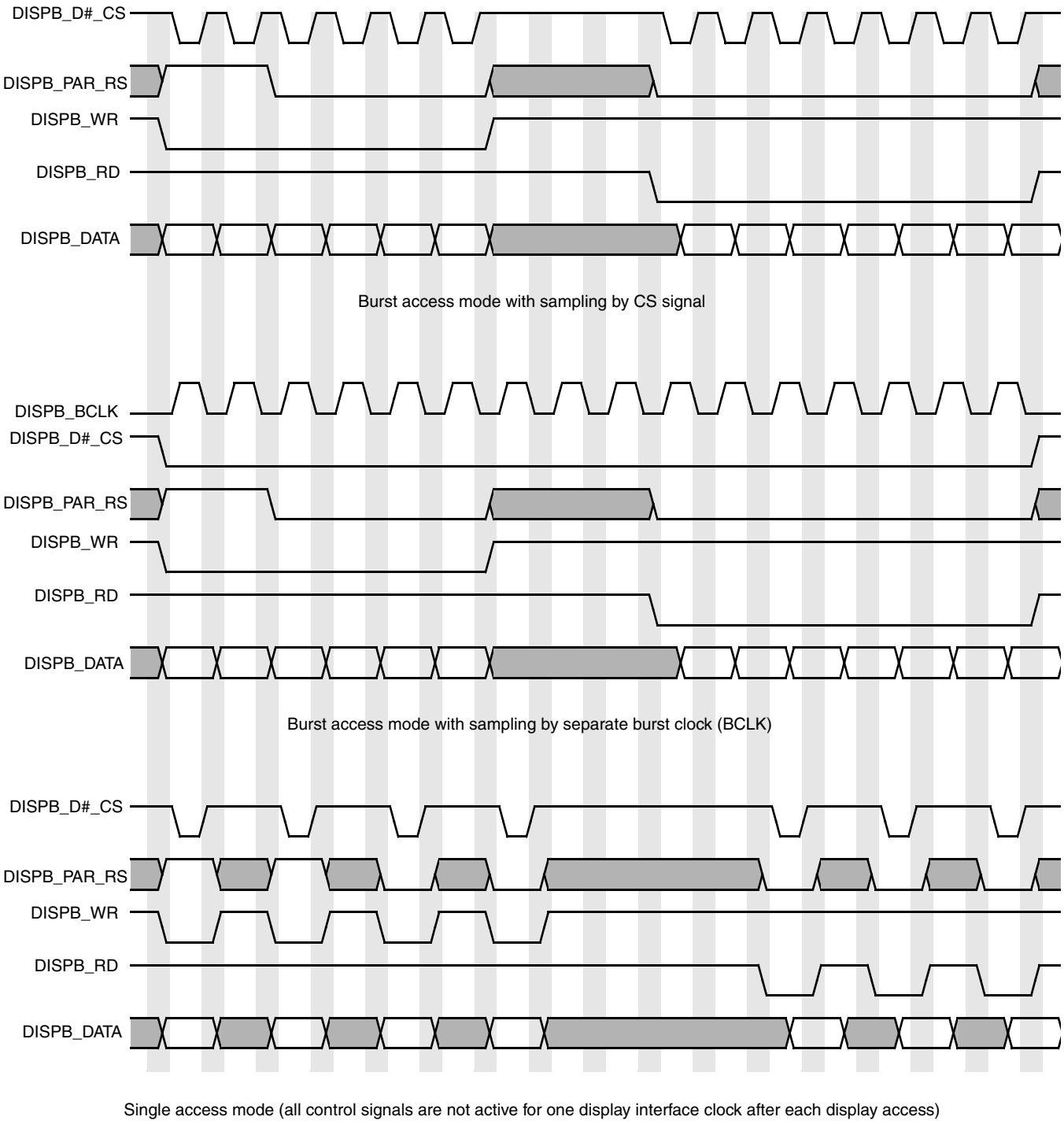

Figure 52. Asynchronous Parallel System 80 Interface (Type 1) Burst Mode Timing Diagram

Because of an order from the United States International Trade Commission, BGA-packaged product lines and part numbers indicated here currently are not available from Freescale for import or sale in the United States prior to September 2010: i.MX31 Product Family

Downloaded from Arrow.com.

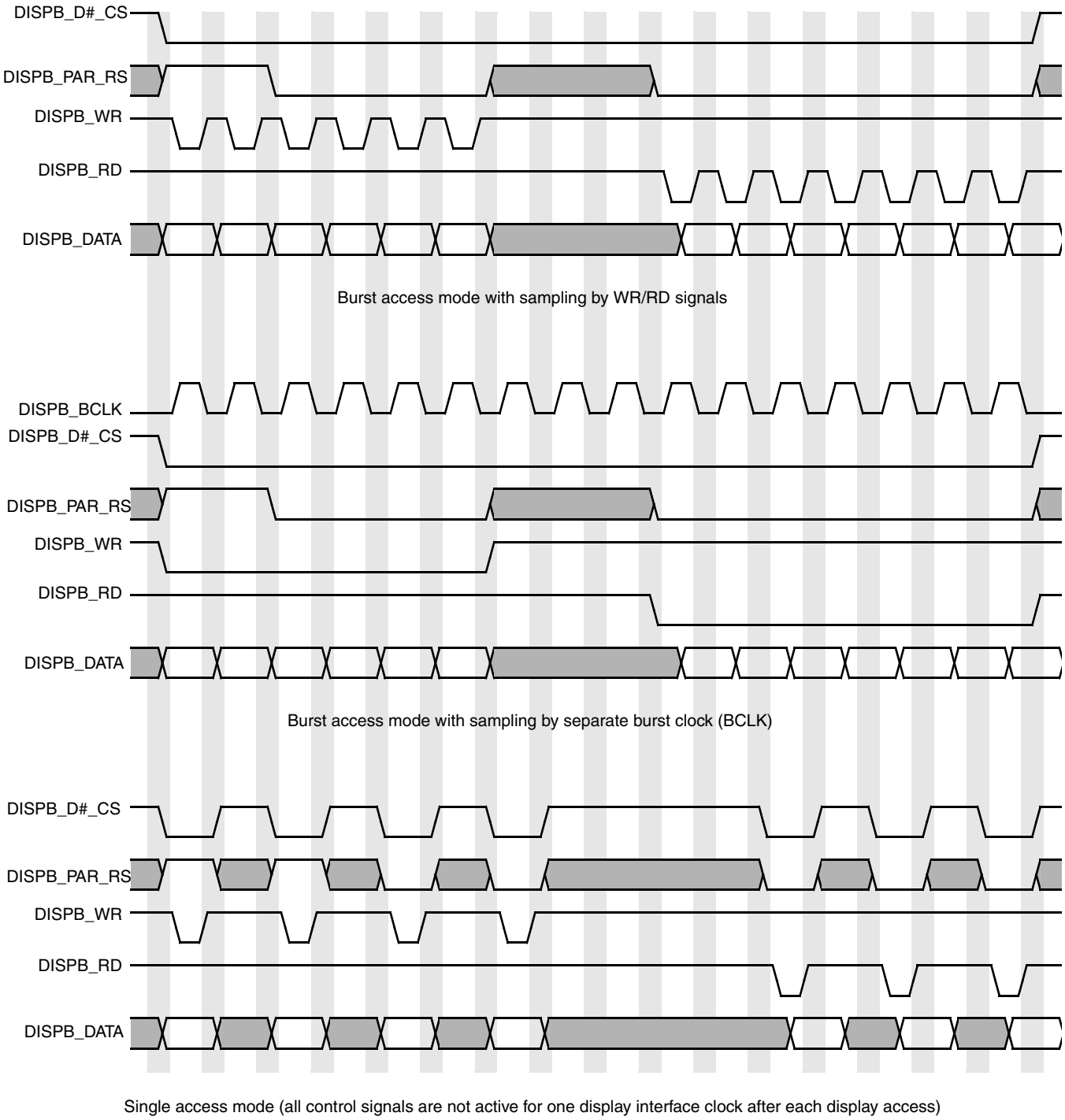

Figure 53. Asynchronous Parallel System 80 Interface (Type 2) Burst Mode Timing Diagram

Because of an order from the United States International Trade Commission, BGA-packaged product lines and part numbers indicated here currently are not available from Freescale for import or sale in the United States prior to September 2010: i.MX31 Product Family

Downloaded from Arrow.com.

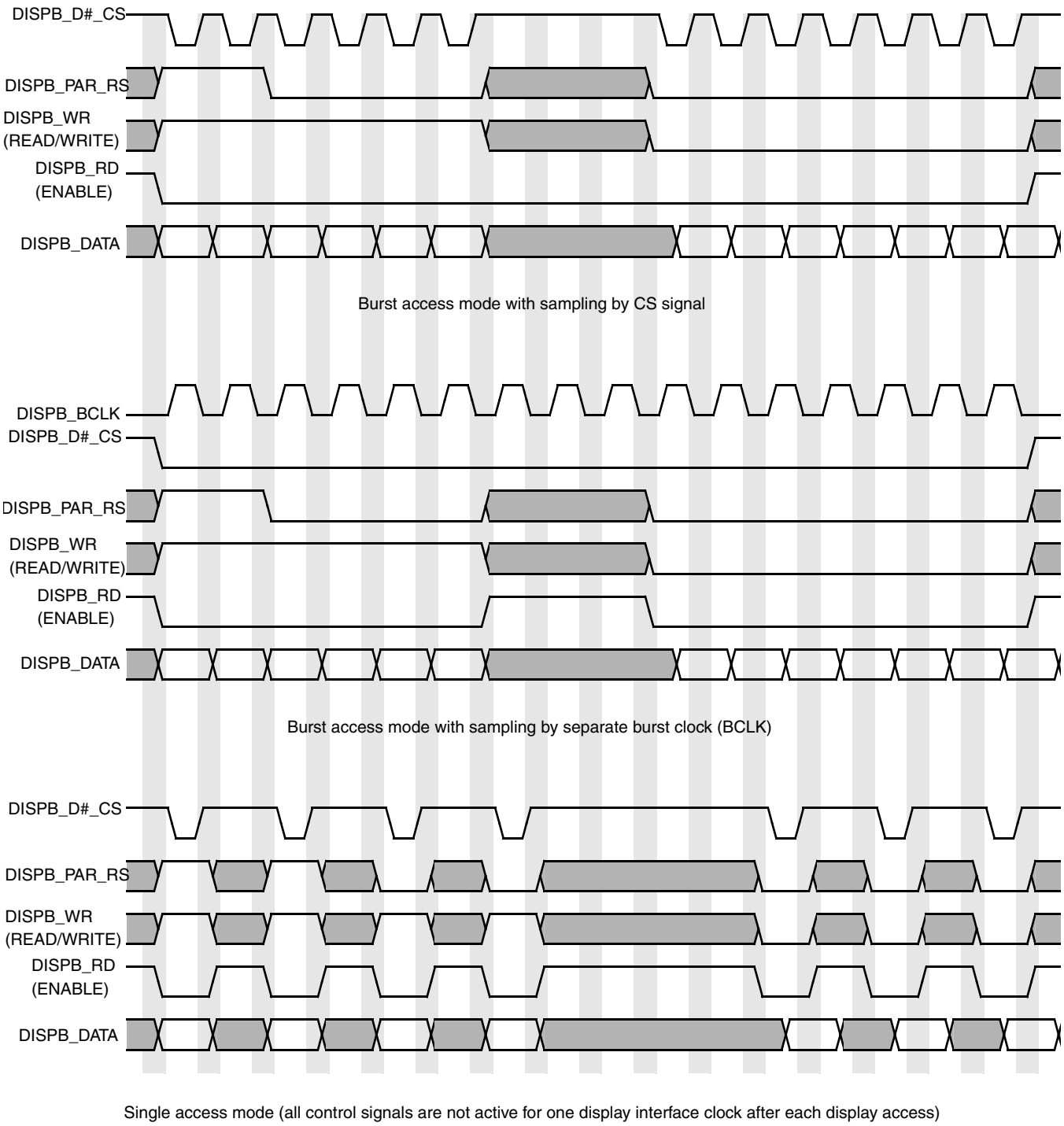

Figure 54. Asynchronous Parallel System 68k Interface (Type 1) Burst Mode Timing Diagram

Because of an order from the United States International Trade Commission, BGA-packaged product lines and part numbers indicated here currently are not available from Freescale for import or sale in the United States prior to September 2010: i.MX31 Product Family

Downloaded from Arrow.com.

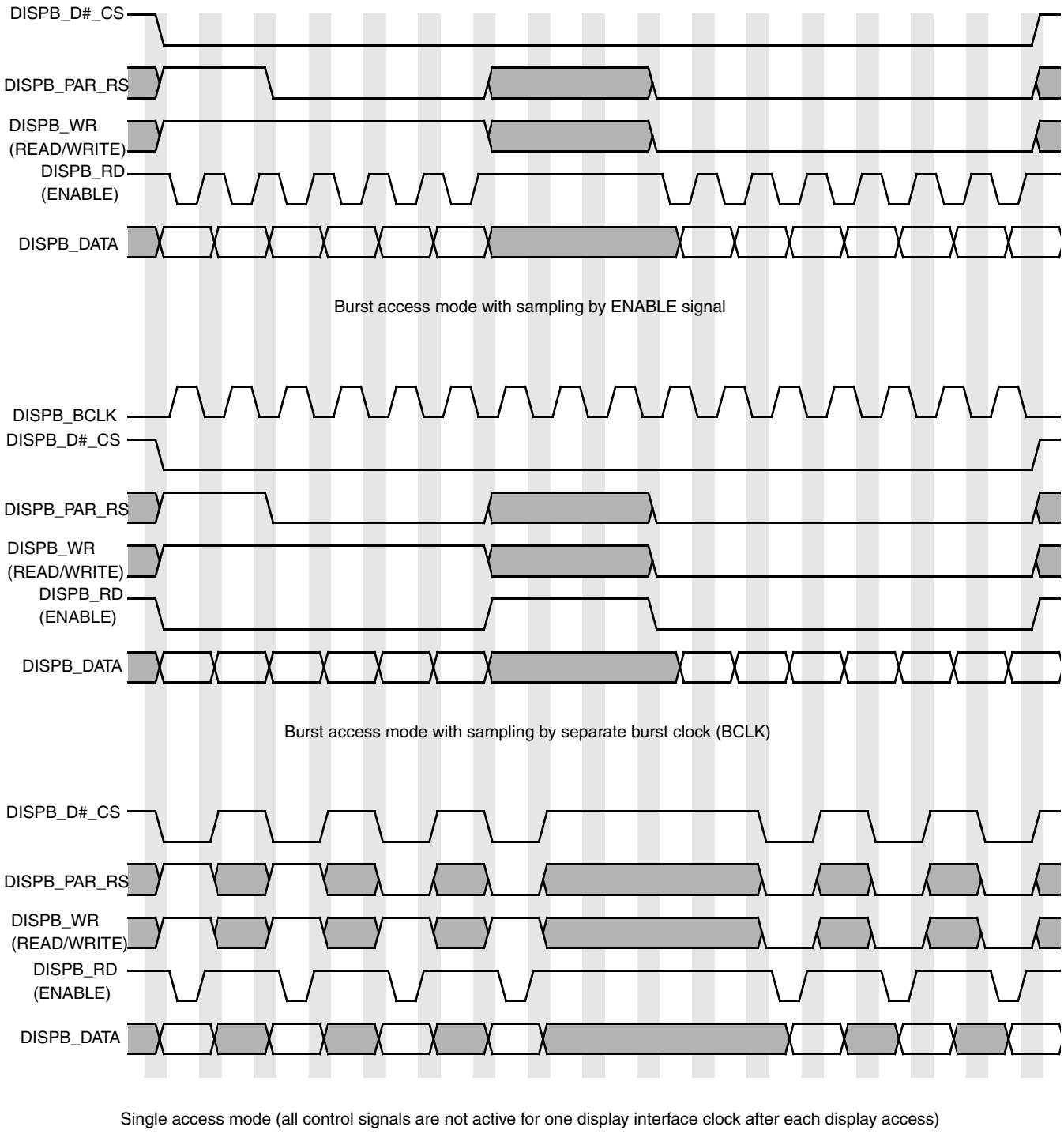

Figure 55. Asynchronous Parallel System 68k Interface (Type 2) Burst Mode TIming Diagram

Display read operation can be performed with wait states when each read access takes up to four display interface clock cycles according to the DISP0_RD_WAIT_ST parameter in the DI_DISP0_TIME_CONF_3, DI_DISP1_TIME_CONF_3, DI_DISP2_TIME_CONF_3 Registers. Figure 56 shows timing of the parallel interface with read wait states.

Because of an order from the United States International Trade Commission, BGA-packaged product lines and part numbers indicated here currently are not available from Freescale for import or sale in the United States prior to September 2010: i.MX31 Product Family

Downloaded from Arrow.com.

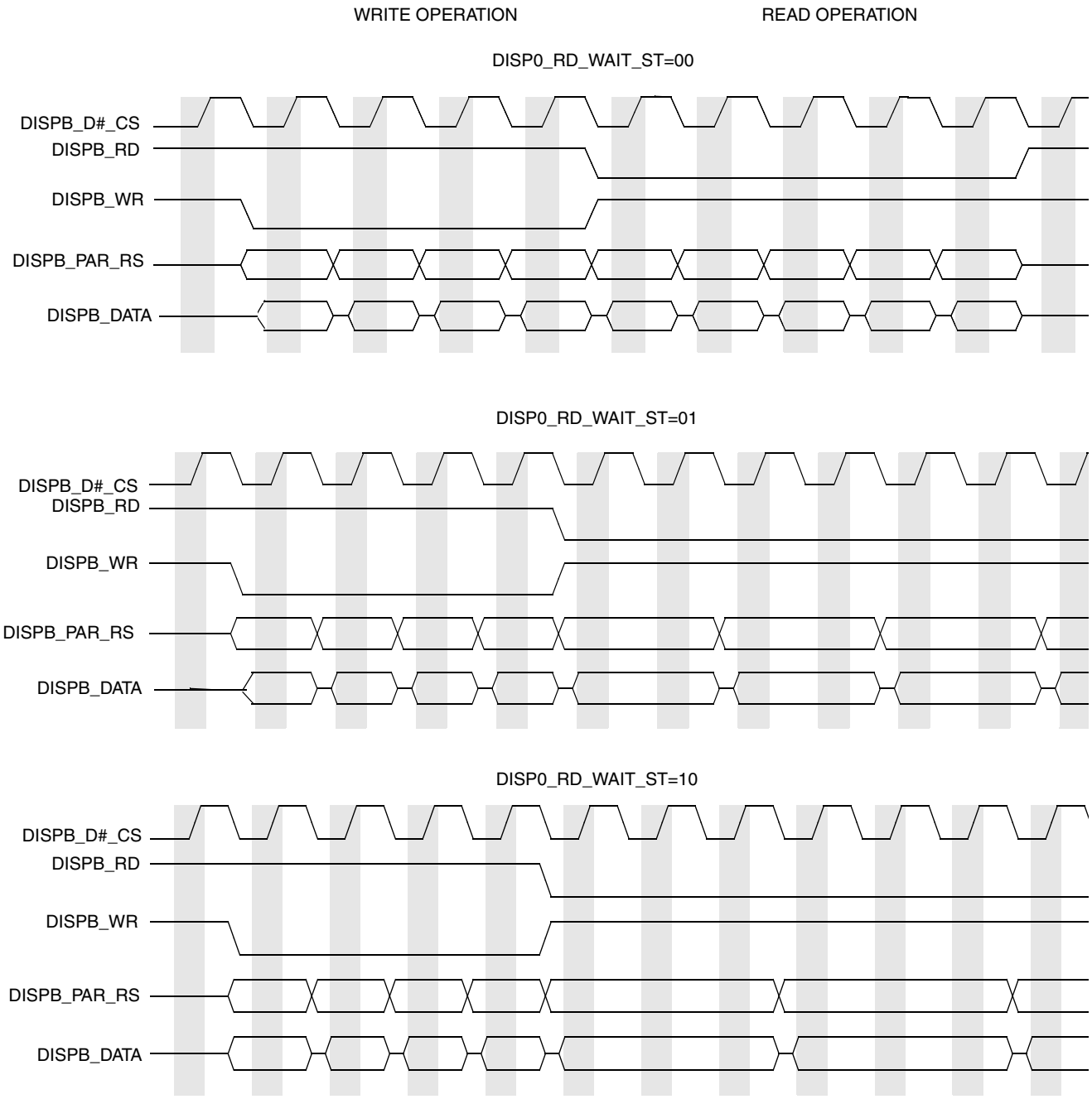

Figure 56. Parallel Interface Timing Diagram—Read Wait States

4.3.15.5.2 Parallel Interfaces, Electrical Characteristics

Figure 57, Figure 59, Figure 58, and Figure 60 depict timing of asynchronous parallel interfaces based on the system 80 and system 68k interfaces. Table 50 lists the timing parameters at display access level. All timing images are based on active low control signals (signals polarity is controlled via the DI_DISP_SIG_POL Register).

Because of an order from the United States International Trade Commission, BGA-packaged product lines and part numbers indicated here currently are not available from Freescale for import or sale in the United States prior to September 2010: i.MX31 Product Family

Downloaded from Arrow.com.

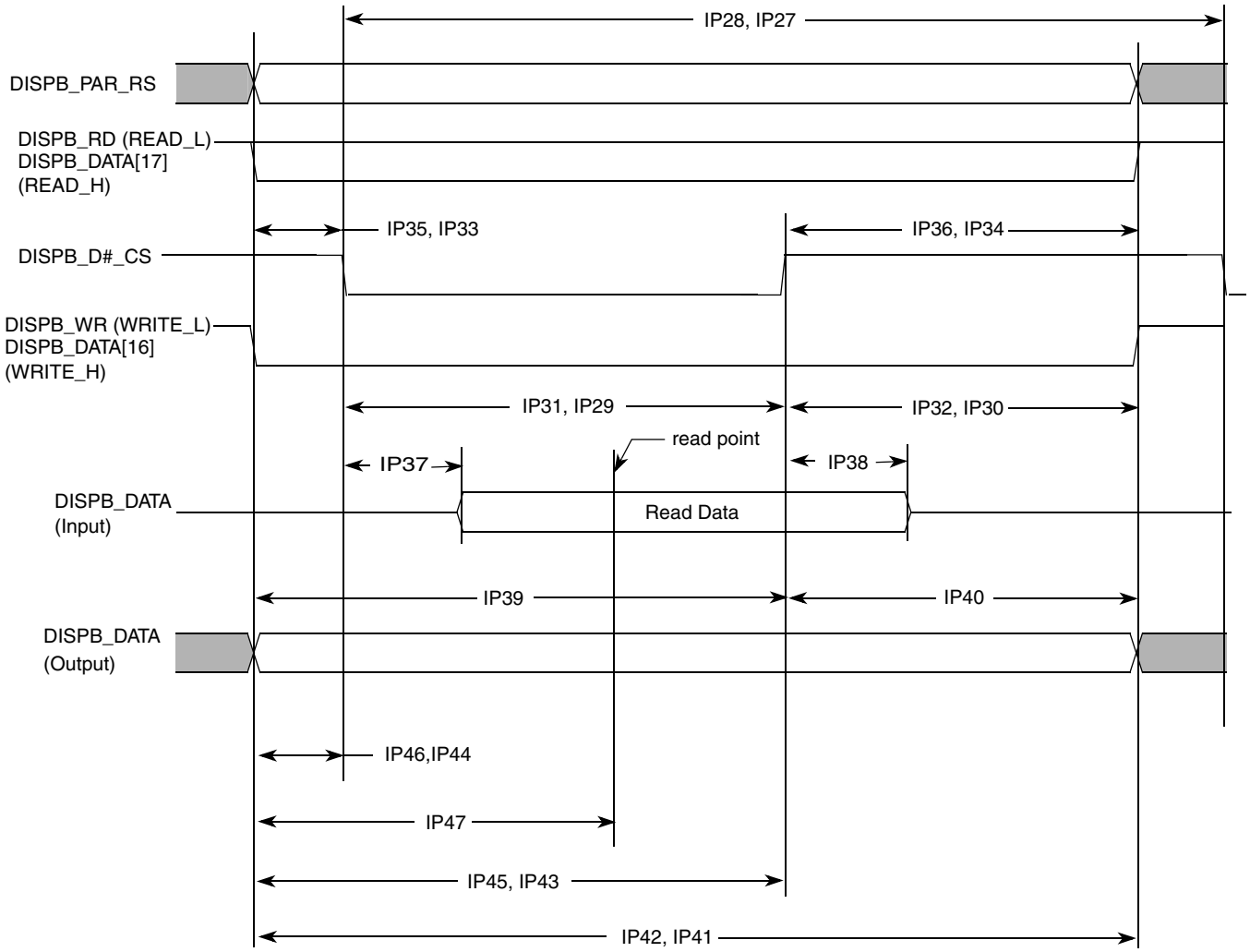

Figure 57. Asynchronous Parallel System 80 Interface (Type 1) Timing Diagram

Because of an order from the United States International Trade Commission, BGA-packaged product lines and part numbers indicated here currently are not available from Freescale for import or sale in the United States prior to September 2010: i.MX31 Product Family

Downloaded from Arrow.com.

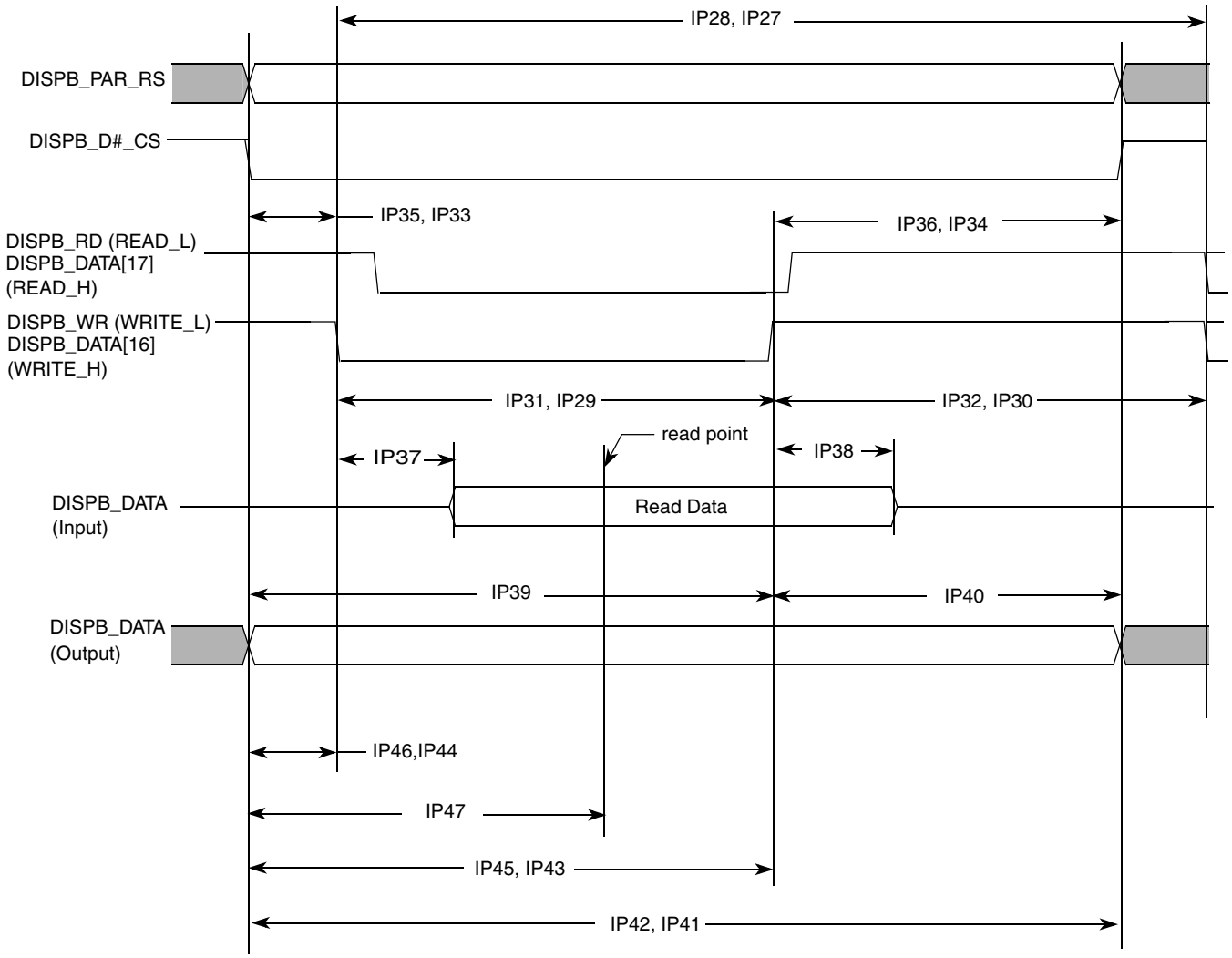

Figure 58. Asynchronous Parallel System 80 Interface (Type 2) Timing Diagram

Because of an order from the United States International Trade Commission, BGA-packaged product lines and part numbers indicated here currently are not available from Freescale for import or sale in the United States prior to September 2010: i.MX31 Product Family

Downloaded from Arrow.com.

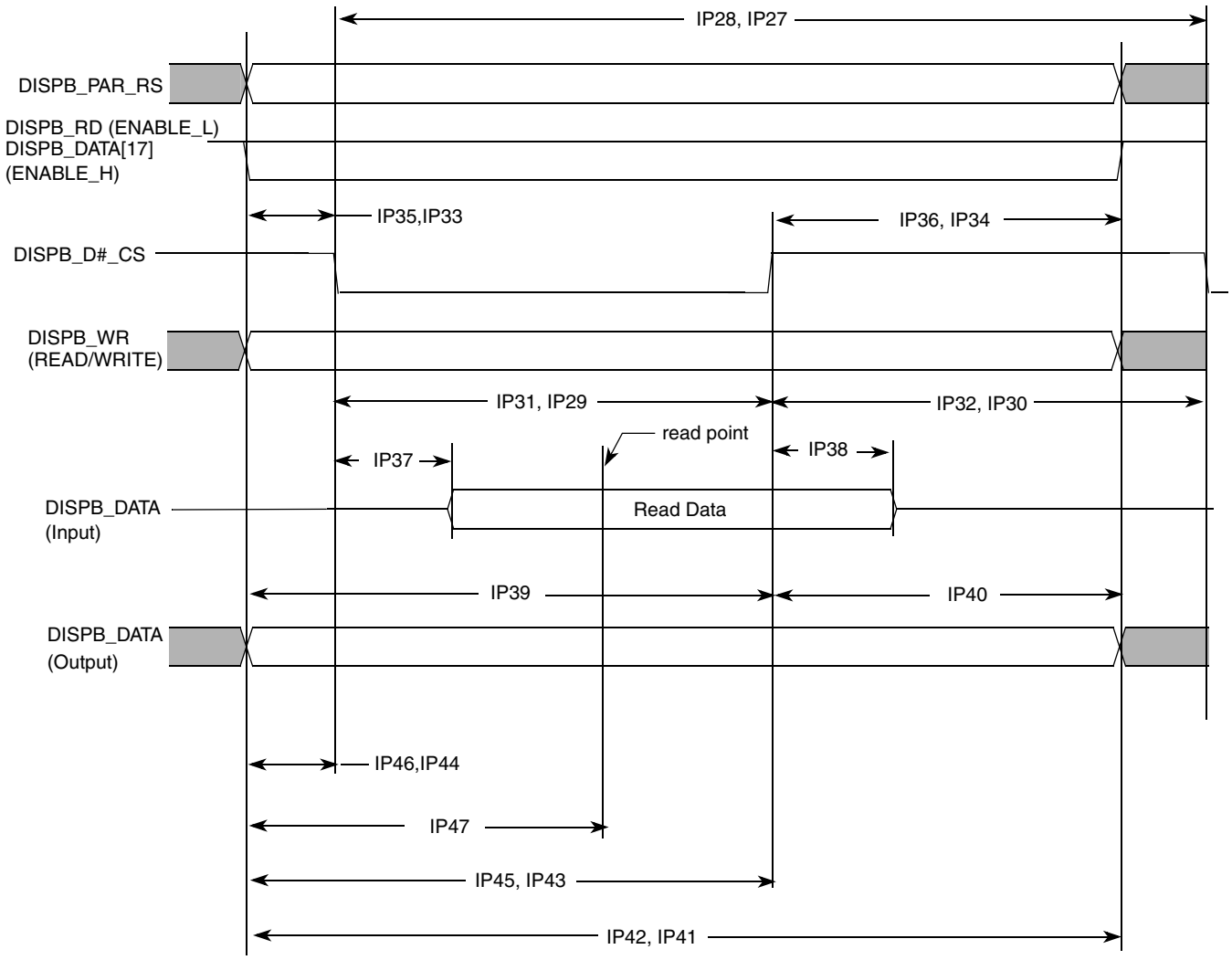

Figure 59. Asynchronous Parallel System 68k Interface (Type 1) Timing Diagram

Because of an order from the United States International Trade Commission, BGA-packaged product lines and part numbers indicated here currently are not available from Freescale for import or sale in the United States prior to September 2010: i.MX31 Product Family

Downloaded from Arrow.com.

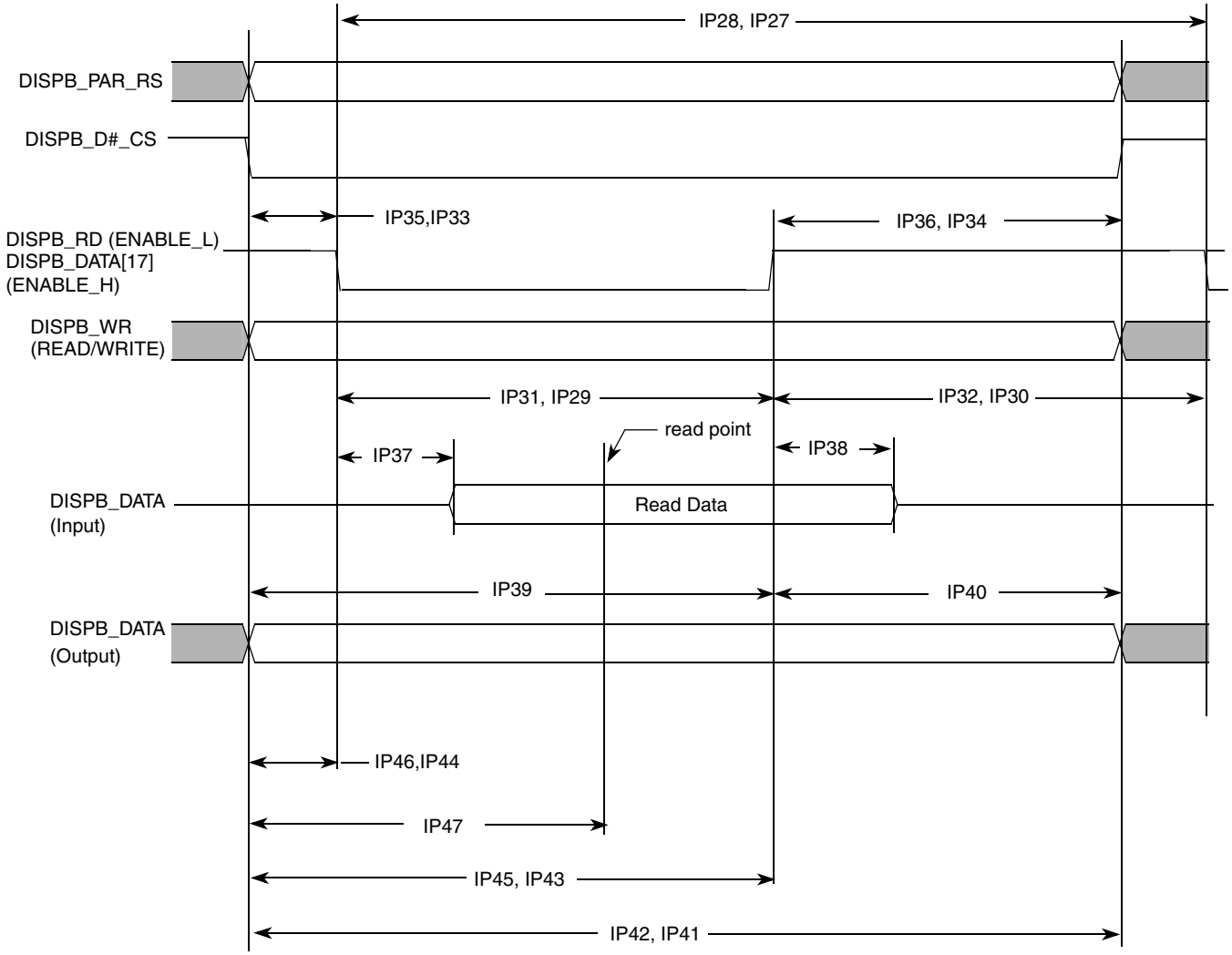

Figure 60. Asynchronous Parallel System 68k Interface (Type 2) Timing Diagram

Table 50. Asynchronous Parallel Interface Timing Parameters—Access Level

ID	Parameter	Symbol	Min.	Typ.[1]	Max.	Units
IP27	Read system cycle time	Tcycr	Tdicpr–1.5	Tdicpr[2]	Tdicpr+1.5	ns
IP28	Write system cycle time	Tcycw	Tdicpw–1.5	Tdicpw[3]	Tdicpw+1.5	ns
IP29	Read low pulse width	Trl	Tdicdr–Tdicur–1.5	Tdicdr[4]–Tdicur[5]	Tdicdr–Tdicur+1.5	ns
IP30	Read high pulse width	Trh	Tdicpr–Tdicdr+Tdicur–1.5	Tdicpr–Tdicdr+ Tdicur	Tdicpr–Tdicdr+Tdicur+1.5	ns
IP31	Write low pulse width	Twl	Tdicdw–Tdicuw–1.5	Tdicdw[6]–Tdicuw[7]	Tdicdw–Tdicuw+1.5	ns
IP32	Write high pulse width	Twh	Tdicpw–Tdicdw+ Tdicuw–1.5	Tdicpw–Tdicdw+ Tdicuw	Tdicpw–Tdicdw+ Tdicuw+1.5	ns
IP33	Controls setup time for read	Tdcsr	Tdicur–1.5	Tdicur	—	ns
IP34	Controls hold time for read	Tdchr	Tdicpr–Tdicdr–1.5	Tdicpr–Tdicdr	—	ns
IP35	Controls setup time for write	Tdcsw	Tdicuw–1.5	Tdicuw	—	ns

Because of an order from the United States International Trade Commission, BGA-packaged product lines and part numbers indicated here currently are not available from Freescale for import or sale in the United States prior to September 2010: i.MX31 Product Family

Downloaded from Arrow.com.

Table 50. Asynchronous Parallel Interface Timing Parameters—Access Level (continued)

ID	Parameter	Symbol	Min.	Typ.[1]	Max.	Units
IP36	Controls hold time for write	Tdchw	Tdicpw–Tdicdw–1.5	Tdicpw–Tdicdw	—	ns
IP37	Slave device data delay[8]	Tracc	0	—	Tdrp[9]–Tlbd[10]–Tdicur–1.5	ns
IP38	Slave device data hold time[8]	Troh	Tdrp–Tlbd–Tdicdr+1.5	—	Tdicpr–Tdicdr–1.5	ns
IP39	Write data setup time	Tds	Tdicdw–1.5	Tdicdw	—	ns
IP40	Write data hold time	Tdh	Tdicpw–Tdicdw–1.5	Tdicpw–Tdicdw	—	ns
IP41	Read period[2]	Tdicpr	Tdicpr–1.5	Tdicpr	Tdicpr+1.5	ns
IP42	Write period[3]	Tdicpw	Tdicpw–1.5	Tdicpw	Tdicpw+1.5	ns
IP43	Read down time[4]	Tdicdr	Tdicdr–1.5	Tdicdr	Tdicdr+1.5	ns
IP44	Read up time[5]	Tdicur	Tdicur–1.5	Tdicur	Tdicur+1.5	ns
IP45	Write down time[6]	Tdicdw	Tdicdw–1.5	Tdicdw	Tdicdw+1.5	ns
IP46	Write up time[7]	Tdicuw	Tdicuw–1.5	Tdicuw	Tdicuw+1.5	ns
IP47	Read time point[9]	Tdrp	Tdrp–1.5	Tdrp	Tdrp+1.5	ns

[1]The exact conditions have not been finalized, but will likely match the current customer requirement for their specific display. These conditions may be device specific.

[2] Display interface clock period value for read:

$$Tdicpr = T_{HSP_CLK} \cdot ceil\left[\frac{DISP\#_IF_CLK_PER_RD}{HSP_CLK_PERIOD}\right]$$

[3] Display interface clock period value for write:

$$Tdicpw = T_{HSP_CLK} \cdot ceil\left[\frac{DISP\#_IF_CLK_PER_WR}{HSP_CLK_PERIOD}\right]$$

[4] Display interface clock down time for read:

$$Tdicdr = \frac{1}{2}T_{HSP_CLK} \cdot ceil\left[\frac{2 \cdot DISP\#_IF_CLK_DOWN_RD}{HSP_CLK_PERIOD}\right]$$

[5] Display interface clock up time for read:

$$Tdicur = \frac{1}{2}T_{HSP_CLK} \cdot ceil\left[\frac{2 \cdot DISP\#_IF_CLK_UP_RD}{HSP_CLK_PERIOD}\right]$$

[6] Display interface clock down time for write:

$$Tdicdw = \frac{1}{2}T_{HSP_CLK} \cdot ceil\left[\frac{2 \cdot DISP\#_IF_CLK_DOWN_WR}{HSP_CLK_PERIOD}\right]$$

[7] Display interface clock up time for write:

$$Tdicuw = \frac{1}{2}T_{HSP_CLK} \cdot ceil\left[\frac{2 \cdot DISP\#_IF_CLK_UP_WR}{HSP_CLK_PERIOD}\right]$$

[8] This parameter is a requirement to the display connected to the IPU

[9] Data read point

$$Tdrp = T_{HSP_CLK} \cdot ceil\left[\frac{DISP\#_READ_EN}{HSP_CLK_PERIOD}\right]$$

[10] Loopback delay Tlbd is the cumulative propagation delay of read controls and read data. It includes an IPU output delay, a device-level output delay, board delays, a device-level input delay, an IPU input delay. This value is device specific.

Because of an order from the United States International Trade Commission, BGA-packaged product lines and part numbers indicated here currently are not available from Freescale for import or sale in the United States prior to September 2010: i.MX31 Product Family

Downloaded from Arrow.com.

The DISP#_IF_CLK_PER_WR, DISP#_IF_CLK_PER_RD, HSP_CLK_PERIOD, DISP#_IF_CLK_DOWN_WR, DISP#_IF_CLK_UP_WR, DISP#_IF_CLK_DOWN_RD, DISP#_IF_CLK_UP_RD and DISP#_READ_EN parameters are programmed via the DI_DISP#_TIME_CONF_1, DI_DISP#_TIME_CONF_2 and DI_HSP_CLK_PER Registers.

4.3.15.5.3 Serial Interfaces, Functional Description

The IPU supports the following types of asynchronous serial interfaces:

- 3-wire (with bidirectional data line)
- 4-wire (with separate data input and output lines)
- 5-wire type 1 (with sampling RS by the serial clock)
- 5-wire type 2 (with sampling RS by the chip select signal)

Figure 61 depicts timing of the 3-wire serial interface. The timing images correspond to active-low DISPB_D#_CS signal and the straight polarity of the DISPB_SD_D_CLK signal.

For this interface, a bidirectional data line is used outside the device. The IPU still uses separate input and output data lines (IPP_IND_DISPB_SD_D and IPP_DO_DISPB_SD_D). The I/O mux should provide joining the internal data lines to the bidirectional external line according to the IPP_OBE_DISPB_SD_D signal provided by the IPU.

Each data transfer can be preceded by an optional preamble with programmable length and contents. The preamble is followed by read/write (RW) and address (RS) bits. The order of the these bits is programmable. The RW bit can be disabled. The following data can consist of one word or of a whole burst. The interface parameters are controlled by the DI_SER_DISP1_CONF and DI_SER_DISP2_CONF Registers.

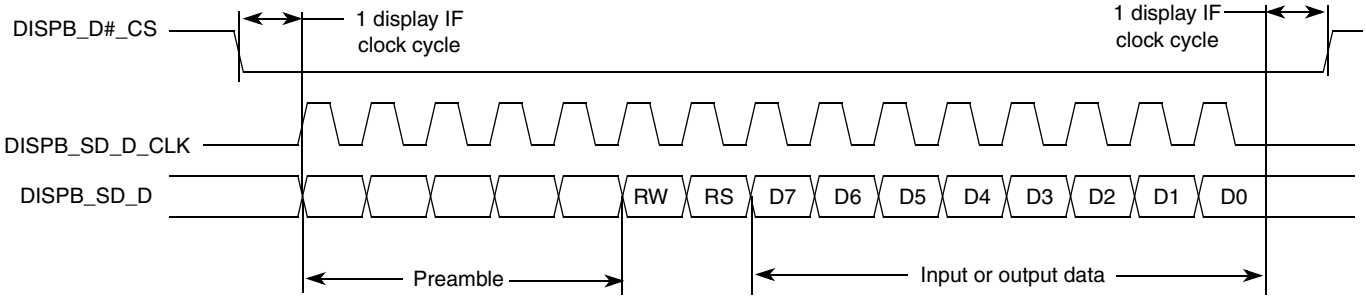

Figure 61. 3-Wire Serial Interface Timing Diagram

Figure 62 depicts timing of the 4-wire serial interface. For this interface, there are separate input and output data lines both inside and outside the device.

Because of an order from the United States International Trade Commission, BGA-packaged product lines and part numbers indicated here currently are not available from Freescale for import or sale in the United States prior to September 2010: i.MX31 Product Family

Downloaded from Arrow.com.

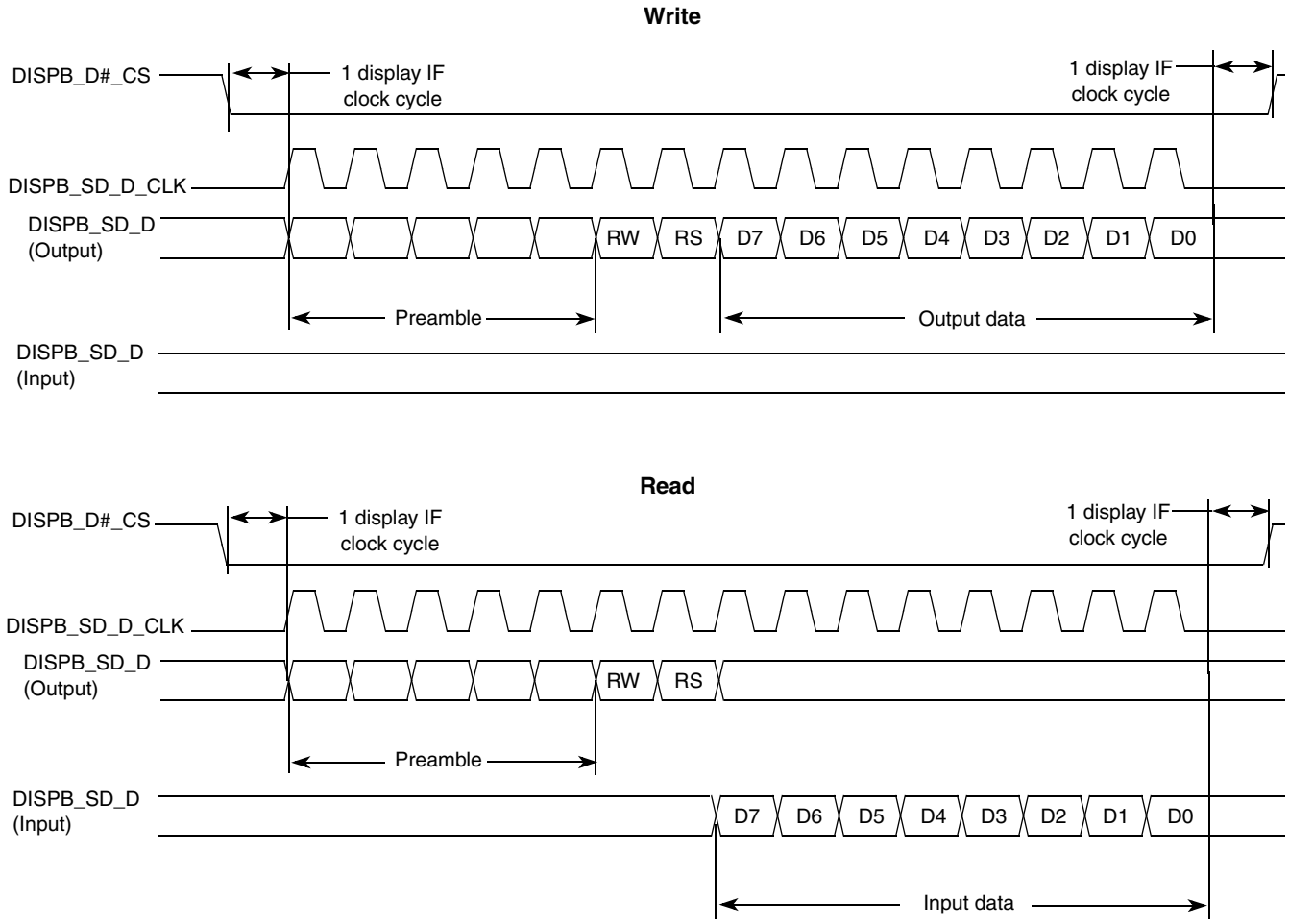

Figure 62. 4-Wire Serial Interface Timing Diagram

Figure 63 depicts timing of the 5-wire serial interface (Type 1). For this interface, a separate RS line is added. When a burst is transmitted within single active chip select interval, the RS can be changed at boundaries of words.

Because of an order from the United States International Trade Commission, BGA-packaged product lines and part numbers indicated here currently are not available from Freescale for import or sale in the United States prior to September 2010: i.MX31 Product Family

Downloaded from Arrow.com.

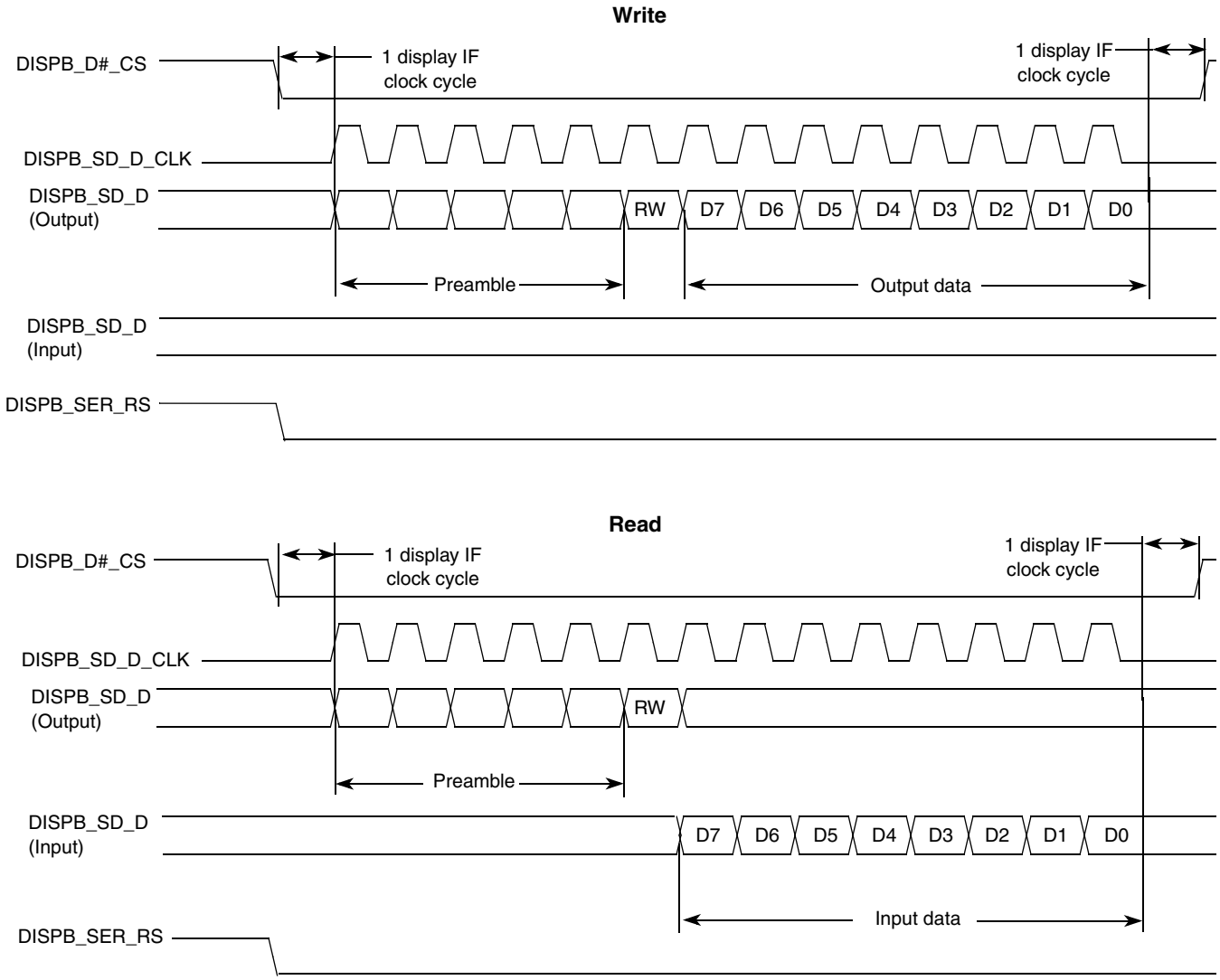

Figure 63. 5-Wire Serial Interface (Type 1) Timing Diagram

Because of an order from the United States International Trade Commission, BGA-packaged product lines and part numbers indicated here currently are not available from Freescale for import or sale in the United States prior to September 2010: i.MX31 Product Family

Downloaded from Arrow.com.

Figure 64 depicts timing of the 5-wire serial interface (Type 2). For this interface, a separate RS line is added. When a burst is transmitted within single active chip select interval, the RS can be changed at boundaries of words.

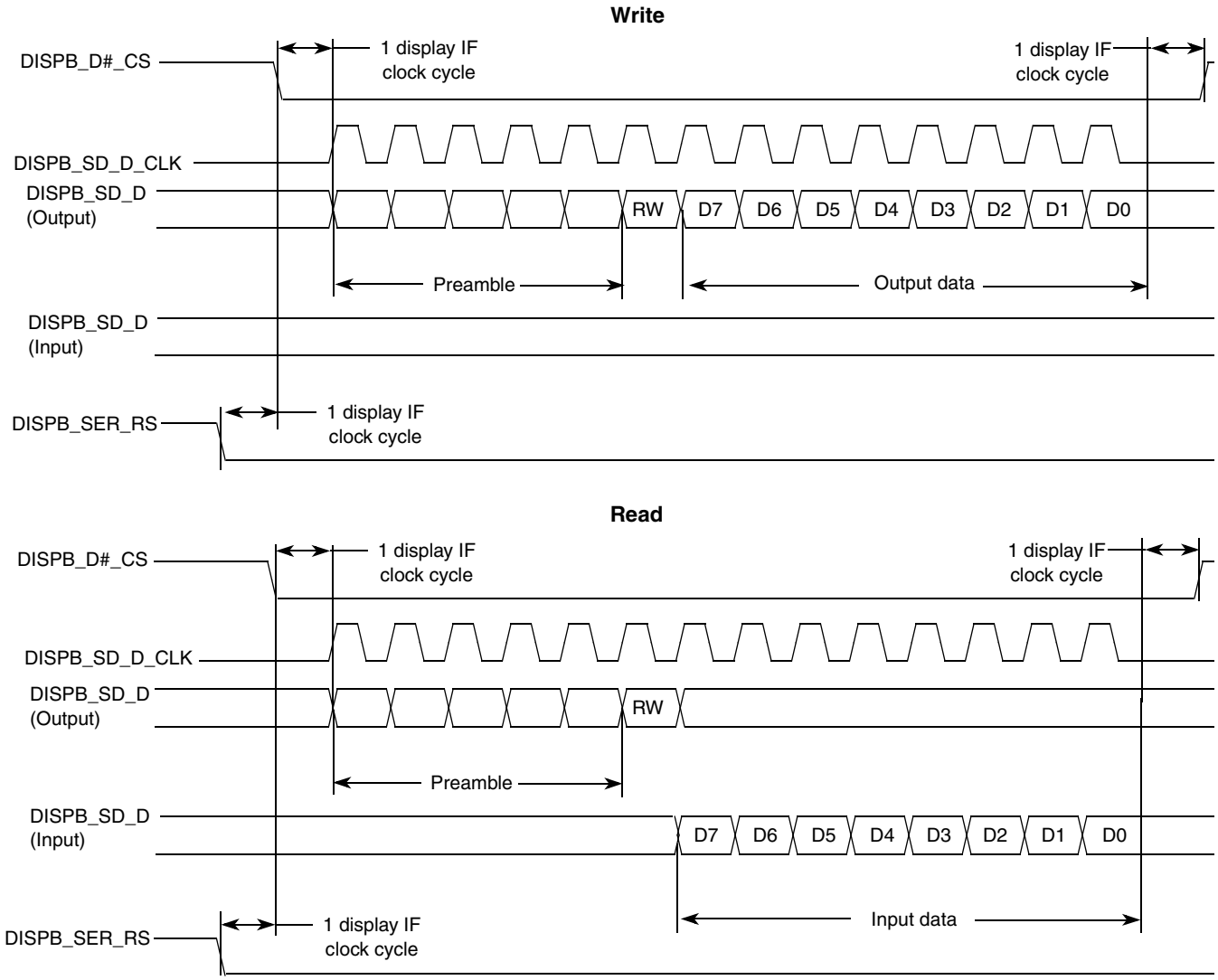

Figure 64. 5-Wire Serial Interface (Type 2) Timing Diagram

Because of an order from the United States International Trade Commission, BGA-packaged product lines and part numbers indicated here currently are not available from Freescale for import or sale in the United States prior to September 2010: i.MX31 Product Family

Downloaded from Arrow.com.

4.3.15.5.4 Serial Interfaces, Electrical Characteristics

Figure 65 depicts timing of the serial interface. Table 51 lists the timing parameters at display access level.

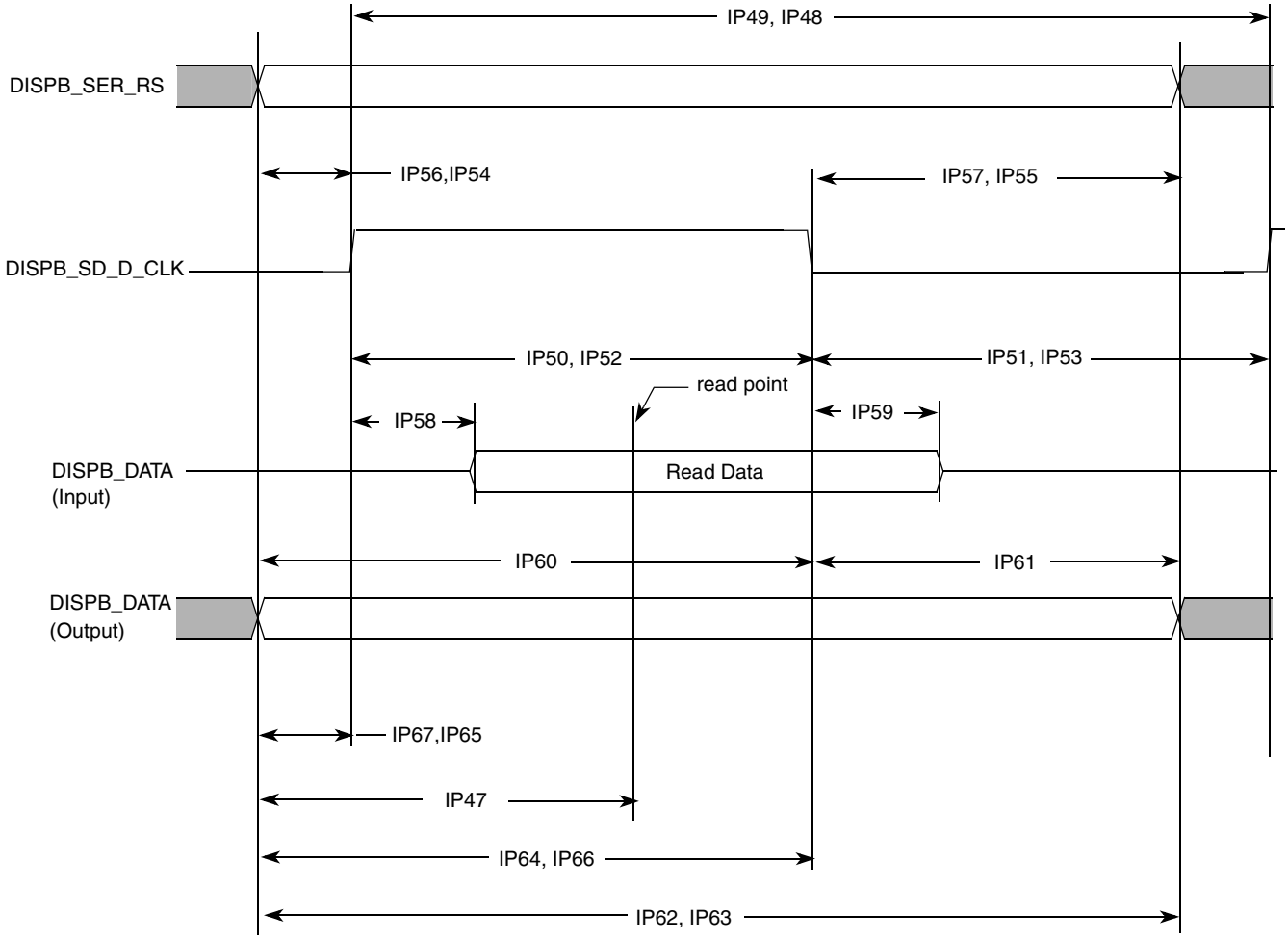

Figure 65. Asynchronous Serial Interface Timing Diagram

Table 51. Asynchronous Serial Interface Timing Parameters—Access Level

ID	Parameter	Symbol	Min.	Typ.[1]	Max.	Units
IP48	Read system cycle time	Tcycr	Tdicpr–1.5	Tdicpr[2]	Tdicpr+1.5	ns
IP49	Write system cycle time	Tcycw	Tdicpw–1.5	Tdicpw[3]	Tdicpw+1.5	ns
IP50	Read clock low pulse width	Trl	Tdicdr–Tdicur–1.5	Tdicdr[4]–Tdicur[5]	Tdicdr–Tdicur+1.5	ns
IP51	Read clock high pulse width	Trh	Tdicpr–Tdicdr+Tdicur–1.5	Tdicpr–Tdicdr+ Tdicur	Tdicpr–Tdicdr+Tdicur+1.5	ns
IP52	Write clock low pulse width	Twl	Tdicdw–Tdicuw–1.5	Tdicdw[6]–Tdicuw[7]	Tdicdw–Tdicuw+1.5	ns
IP53	Write clock high pulse width	Twh	Tdicpw–Tdicdw+ Tdicuw–1.5	Tdicpw–Tdicdw+ Tdicuw	Tdicpw–Tdicdw+ Tdicuw+1.5	ns
IP54	Controls setup time for read	Tdcsr	Tdicur–1.5	Tdicur	—	ns
IP55	Controls hold time for read	Tdchr	Tdicpr–Tdicdr–1.5	Tdicpr–Tdicdr	—	ns

Because of an order from the United States International Trade Commission, BGA-packaged product lines and part numbers indicated here currently are not available from Freescale for import or sale in the United States prior to September 2010: i.MX31 Product Family

Downloaded from Arrow.com.

Table 51. Asynchronous Serial Interface Timing Parameters—Access Level (continued)

ID	Parameter	Symbol	Min.	Typ.[1]	Max.	Units
IP56	Controls setup time for write	Tdcsw	Tdicuw–1.5	Tdicuw	—	ns
IP57	Controls hold time for write	Tdchw	Tdicpw–Tdicdw–1.5	Tdicpw–Tdicdw	—	ns
IP58	Slave device data delay[8]	Tracc	0	—	Tdrp[9]–Tlbd[10]–Tdicur–1.5	ns
IP59	Slave device data hold time[8]	Troh	Tdrp–Tlbd–Tdicdr+1.5	—	Tdicpr–Tdicdr–1.5	ns
IP60	Write data setup time	Tds	Tdicdw–1.5	Tdicdw	—	ns
IP61	Write data hold time	Tdh	Tdicpw–Tdicdw–1.5	Tdicpw–Tdicdw	—	ns
IP62	Read period[2]	Tdicpr	Tdicpr–1.5	Tdicpr	Tdicpr+1.5	ns
IP63	Write period[3]	Tdicpw	Tdicpw–1.5	Tdicpw	Tdicpw+1.5	ns
IP64	Read down time[4]	Tdicdr	Tdicdr–1.5	Tdicdr	Tdicdr+1.5	ns
IP65	Read up time[5]	Tdicur	Tdicur–1.5	Tdicur	Tdicur+1.5	ns
IP66	Write down time[6]	Tdicdw	Tdicdw–1.5	Tdicdw	Tdicdw+1.5	ns
IP67	Write up time[7]	Tdicuw	Tdicuw–1.5	Tdicuw	Tdicuw+1.5	ns
IP68	Read time point[9]	Tdrp	Tdrp–1.5	Tdrp	Tdrp+1.5	ns

1 The exact conditions have not been finalized, but will likely match the current customer requirement for their specific display. These conditions may be device specific.

2 Display interface clock period value for read:

$$Tdicpr = T_{HSP_CLK} \cdot ceil\left[\frac{DISP\#_IF_CLK_PER_RD}{HSP_CLK_PERIOD}\right]$$

3 Display interface clock period value for write:

$$Tdicpw = T_{HSP_CLK} \cdot ceil\left[\frac{DISP\#_IF_CLK_PER_WR}{HSP_CLK_PERIOD}\right]$$

4 Display interface clock down time for read:

$$Tdicdr = \frac{1}{2}T_{HSP_CLK} \cdot ceil\left[\frac{2 \cdot DISP\#_IF_CLK_DOWN_RD}{HSP_CLK_PERIOD}\right]$$

5 Display interface clock up time for read:

$$Tdicur = \frac{1}{2}T_{HSP_CLK} \cdot ceil\left[\frac{2 \cdot DISP\#_IF_CLK_UP_RD}{HSP_CLK_PERIOD}\right]$$

6 Display interface clock down time for write:

$$Tdicdw = \frac{1}{2}T_{HSP_CLK} \cdot ceil\left[\frac{2 \cdot DISP\#_IF_CLK_DOWN_WR}{HSP_CLK_PERIOD}\right]$$

7 Display interface clock up time for write:

$$Tdicuw = \frac{1}{2}T_{HSP_CLK} \cdot ceil\left[\frac{2 \cdot DISP\#_IF_CLK_UP_WR}{HSP_CLK_PERIOD}\right]$$

8 This parameter is a requirement to the display connected to the IPU.

9 Data read point:

$$Tdrp = T_{HSP_CLK} \cdot ceil\left[\frac{DISP\#_READ_EN}{HSP_CLK_PERIOD}\right]$$

10 Loopback delay Tlbd is the cumulative propagation delay of read controls and read data. It includes an IPU output delay, a device-level output delay, board delays, a device-level input delay, an IPU input delay. This value is device specific.

Because of an order from the United States International Trade Commission, BGA-packaged product lines and part numbers indicated here currently are not available from Freescale for import or sale in the United States prior to September 2010: i.MX31 Product Family

Downloaded from Arrow.com.

The DISP#_IF_CLK_PER_WR, DISP#_IF_CLK_PER_RD, HSP_CLK_PERIOD, DISP#_IF_CLK_DOWN_WR, DISP#_IF_CLK_UP_WR, DISP#_IF_CLK_DOWN_RD, DISP#_IF_CLK_UP_RD and DISP#_READ_EN parameters are programmed via the DI_DISP#_TIME_CONF_1, DI_DISP#_TIME_CONF_2 and DI_HSP_CLK_PER Registers.

4.3.16 Memory Stick Host Controller (MSHC)

Figure 66, Figure 67, and Figure 68 depict the MSHC timings, and Table 52 and Table 53 list the timing parameters.

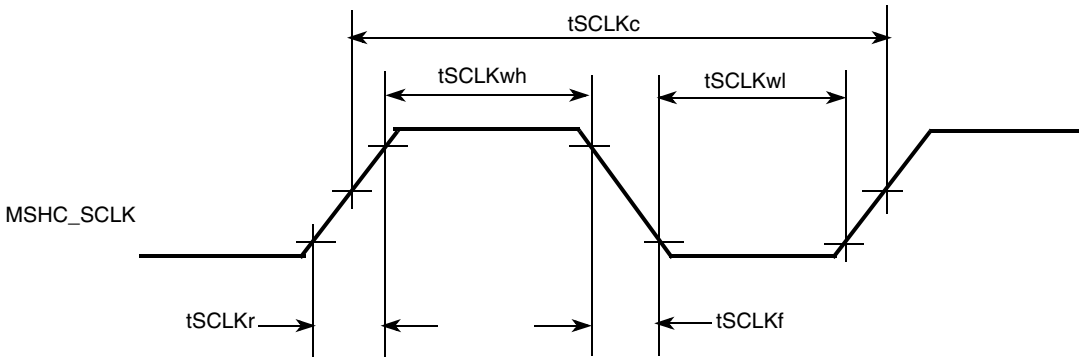

Figure 66. MSHC_CLK Timing Diagram

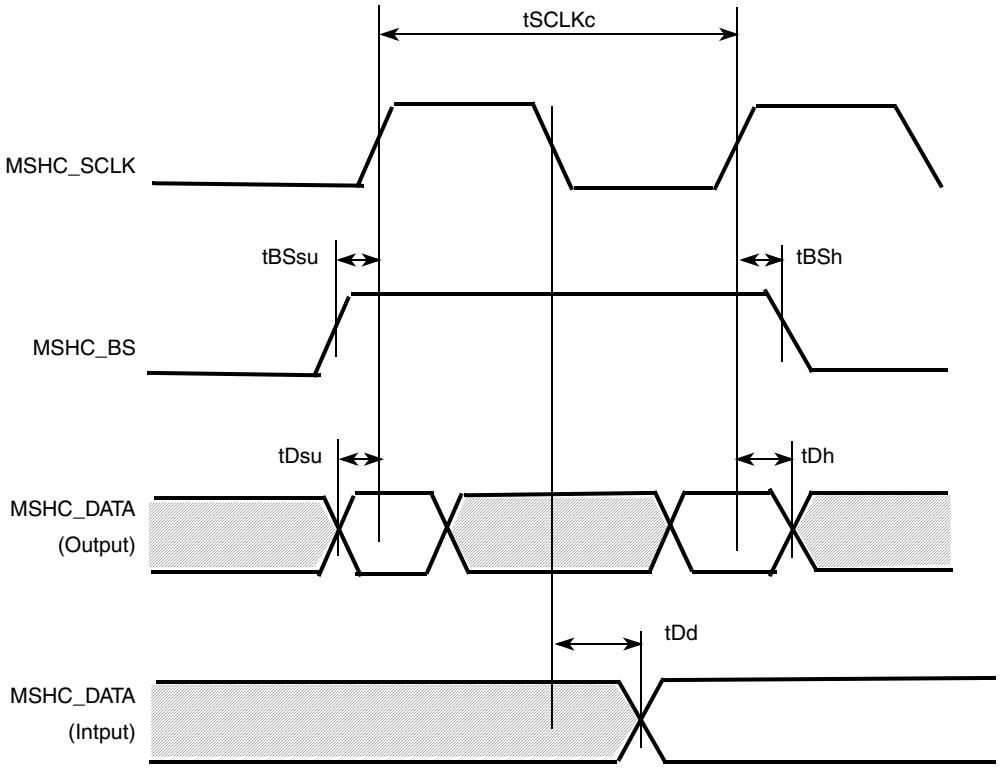

Figure 67. Transfer Operation Timing Diagram (Serial)

Because of an order from the United States International Trade Commission, BGA-packaged product lines and part numbers indicated here currently are not available from Freescale for import or sale in the United States prior to September 2010: i.MX31 Product Family

Downloaded from Arrow.com.

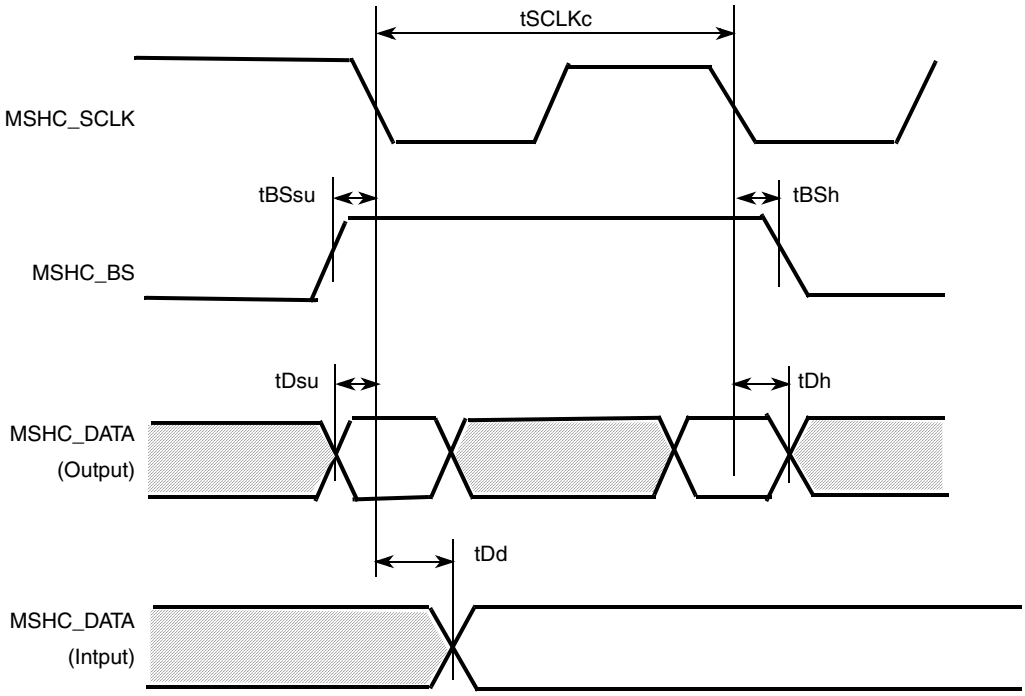

Figure 68. Transfer Operation Timing Diagram (Parallel)

NOTE

The Memory Stick Host Controller is designed to meet the timing requirements per Sony's *Memory Stick Pro Format Specifications* document. Tables in this section details the specifications requirements for parallel and serial modes, and not the MCIMX31 timing.

Table 52. Serial Interface Timing Parameters[1]

Signal	Parameter	Symbol	Standards		Unit
			Min.	Max.	
MSHC_SCLK	Cycle	tSCLKc	50	—	ns
	H pulse length	tSCLKwh	15	—	ns
	L pulse length	tSCLKwl	15	—	ns
	Rise time	tSCLKr	—	10	ns
	Fall time	tSCLKf	—	10	ns
MSHC_BS	Setup time	tBSsu	5	—	ns
	Hold time	tBSh	5	—	ns
MSHC_DATA	Setup time	tDsu	5	—	ns
	Hold time	tDh	5	—	ns
	Output delay time	tDd	—	15	ns

[1] Timing is guaranteed for NVCC from 2.7 through 3.1 V and up to a maximum overdrive NVCC of 3.3 V. See NVCC restrictions described in Table 8, "Operating Ranges," on page 13.

Because of an order from the United States International Trade Commission, BGA-packaged product lines and part numbers indicated here currently are not available from Freescale for import or sale in the United States prior to September 2010: i.MX31 Product Family

Downloaded from Arrow.com.

Table 53. Parallel Interface Timing Parameters[1]

Signal	Parameter	Symbol	Standards		Unit
			Min	Max	
MSHC_SCLK	Cycle	tSCLKc	25	—	ns
	H pulse length	tSCLKwh	5	—	ns
	L pulse length	tSCLKwl	5	—	ns
	Rise time	tSCLKr	—	10	ns
	Fall time	tSCLKf	—	10	ns
MSHC_BS	Setup time	tBSsu	8	—	ns
	Hold time	tBSh	1	—	ns
MSHC_DATA	Setup time	tDsu	8	—	ns
	Hold time	tDh	1	—	ns
	Output delay time	tDd	—	15	ns

[1] Timing is guaranteed for NVCC from 2.7 through 3.1 V and up to a maximum overdrive NVCC of 3.3 V. See NVCC restrictions described in Table 8, "Operating Ranges," on page 13.

4.3.17 Personal Computer Memory Card International Association (PCMCIA)

Figure 69 and Figure 70 depict the timings pertaining to the PCMCIA module, each of which is an example of one clock of strobe set-up time and one clock of strobe hold time. Table 54 lists the timing parameters.

Because of an order from the United States International Trade Commission, BGA-packaged product lines and part numbers indicated here currently are not available from Freescale for import or sale in the United States prior to September 2010: i.MX31 Product Family

Downloaded from Arrow.com.

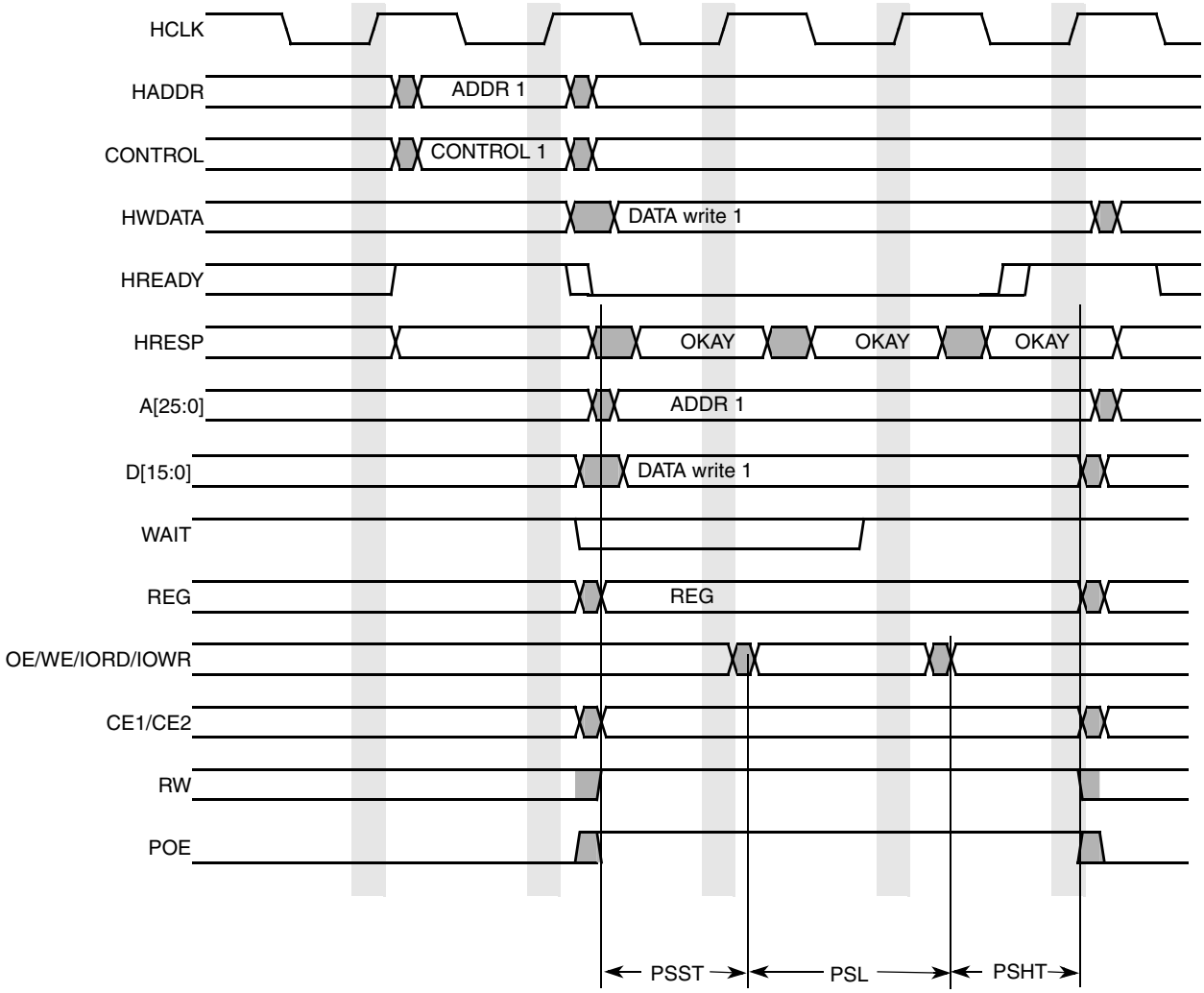

Figure 69. Write Accesses Timing Diagram—PSHT=1, PSST=1

Because of an order from the United States International Trade Commission, BGA-packaged product lines and part numbers indicated here currently are not available from Freescale for import or sale in the United States prior to September 2010: i.MX31 Product Family

Downloaded from Arrow.com.

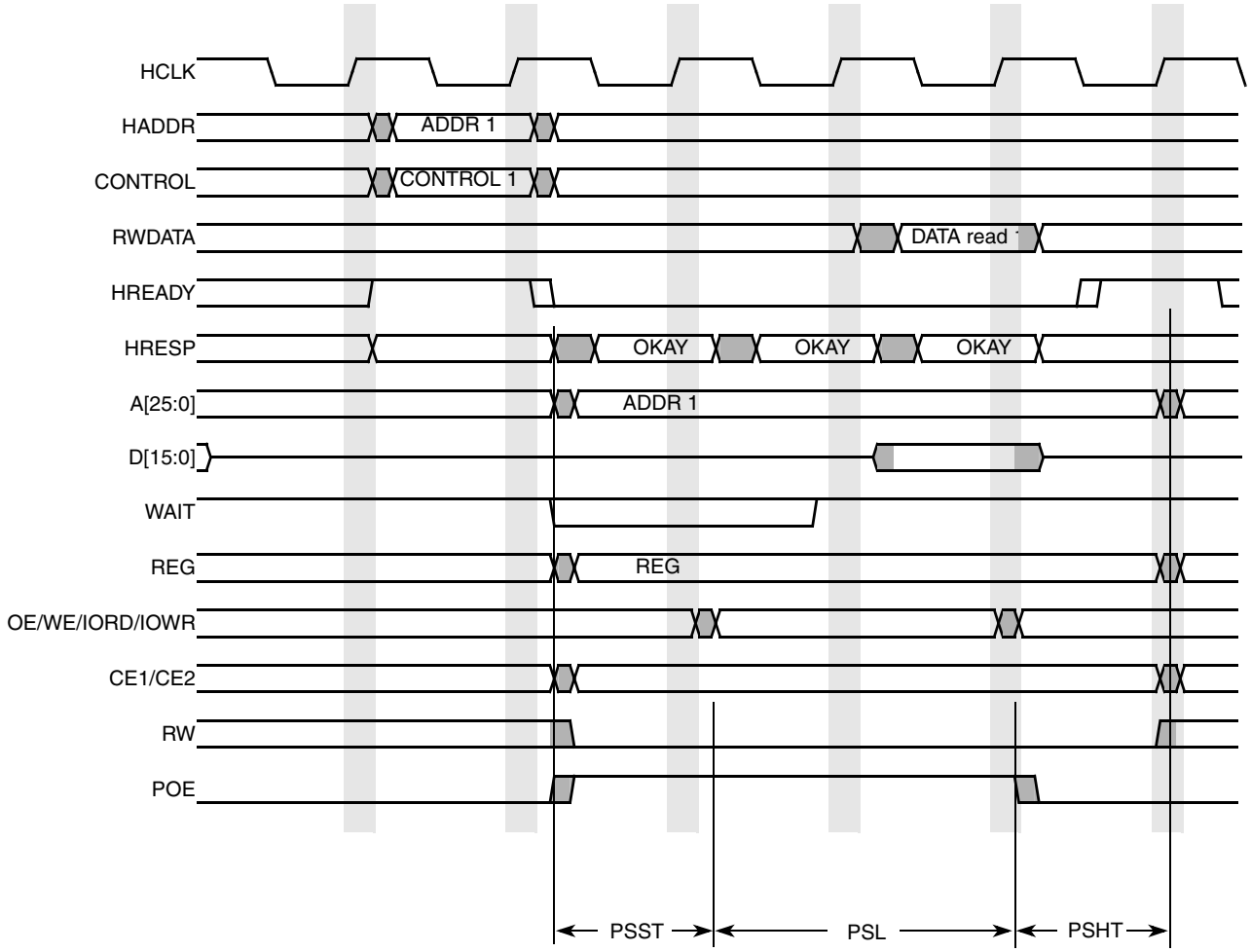

Figure 70. Read Accesses Timing Diagram—PSHT=1, PSST=1

Table 54. PCMCIA Write and Read Timing Parameters

Symbol	Parameter	Min	Max	Unit
PSHT	PCMCIA strobe hold time	0	63	clock
PSST	PCMCIA strobe set up time	1	63	clock
PSL	PCMCIA strobe length	1	128	clock

4.3.18 PWM Electrical Specifications

This section describes the electrical information of the PWM. The PWM can be programmed to select one of three clock signals as its source frequency. The selected clock signal is passed through a prescaler before being input to the counter. The output is available at the pulse-width modulator output (PWMO) external pin.

Because of an order from the United States International Trade Commission, BGA-packaged product lines and part numbers indicated here currently are not available from Freescale for import or sale in the United States prior to September 2010: i.MX31 Product Family

Downloaded from Arrow.com.

4.3.18.1 PWM Timing

Figure 71 depicts the timing of the PWM, and Table 55 lists the PWM timing characteristics.

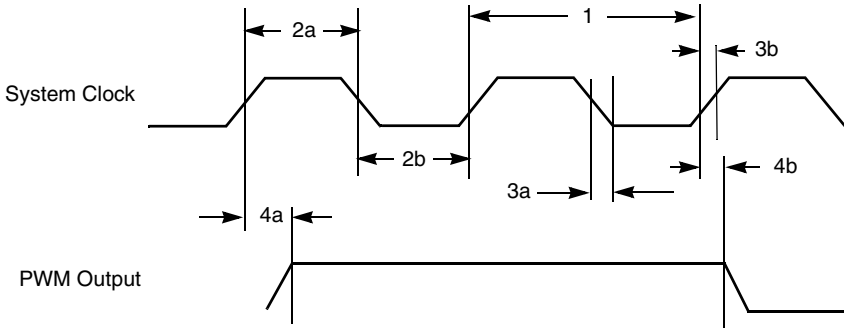

Figure 71. PWM Timing

Table 55. PWM Output Timing Parameters

ID	Parameter	Min	Max	Unit
1	System CLK frequency[1]	0	ipg_clk	MHz
2a	Clock high time	12.29	—	ns
2b	Clock low time	9.91	—	ns
3a	Clock fall time	—	0.5	ns
3b	Clock rise time	—	0.5	ns
4a	Output delay time	—	9.37	ns
4b	Output setup time	8.71	—	ns

[1] CL of PWMO = 30 pF

4.3.19 SDHC Electrical Specifications

This section describes the electrical information of the SDHC.

4.3.19.1 SDHC Timing

Figure 72 depicts the timings of the SDHC, and Table 56 lists the timing parameters.

Because of an order from the United States International Trade Commission, BGA-packaged product lines and part numbers indicated here currently are not available from Freescale for import or sale in the United States prior to September 2010: i.MX31 Product Family

Downloaded from Arrow.com.

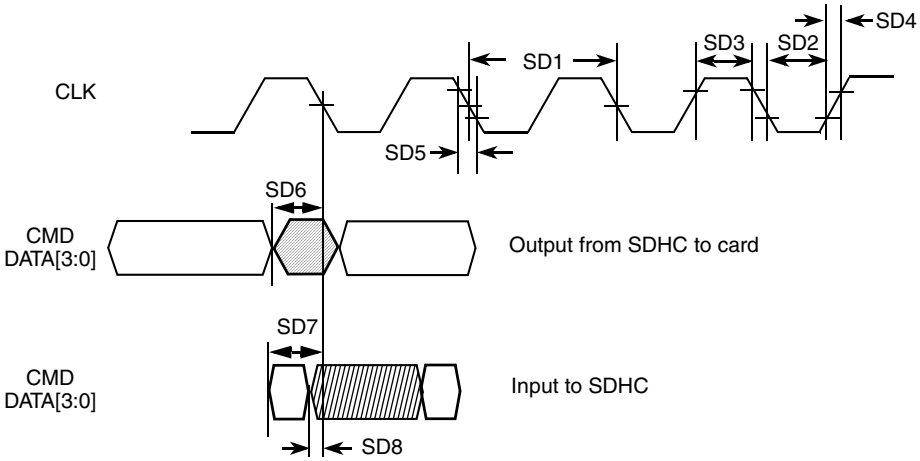

Figure 72. SDHC Timing Diagram

Table 56. SDHC Interface Timing Parameters

ID	Parameter	Symbol	Min	Max	Unit
Card Input Clock					
SD1	Clock Frequency (Low Speed)	f_{PP}[1]	0	400	kHz
	Clock Frequency (SD/SDIO Full Speed)	f_{PP}[2]	0	25	MHz
	Clock Frequency (MMC Full Speed)	f_{PP}[3]	0	20	MHz
	Clock Frequency (Identification Mode)	f_{OD}[4]	100	400	kHz
SD2	Clock Low Time	t_{WL}	10	—	ns
SD3	Clock High Time	t_{WH}	10	—	ns
SD4	Clock Rise Time	t_{TLH}	—	10	ns
SD5	Clock Fall Time	t_{THL}	—	10	ns
SDHC Output/Card Inputs CMD, DAT (Reference to CLK)					
SD6	SDHC output delay	t_{ODL}	–6.5	3	ns
SDHC Input/Card Outputs CMD, DAT (Reference to CLK)					
SD7	SDHC input setup	t_{IS}	—	18.5	ns
SD8	SDHC input hold	t_{IH}	—	–11.5	ns

[1] In low speed mode, card clock must be lower than 400 kHz, voltage ranges from 2.7 V–3.3 V.
[2] In normal data transfer mode for SD/SDIO card, clock frequency can be any value between 0 MHz–25 MHz.
[3] In normal data transfer mode for MMC card, clock frequency can be any value between 0 MHz–20 MHz.
[4] In card identification mode, card clock must be 100 kHz–400 kHz, voltage ranges from 2.7 V–3.3 V.

4.3.20 SIM Electrical Specifications

Each SIM card interface consist of a total of 12 pins (for 2 separate ports of 6 pins each. Mostly one port with 5 pins is used).

Because of an order from the United States International Trade Commission, BGA-packaged product lines and part numbers indicated here currently are not available from Freescale for import or sale in the United States prior to September 2010: i.MX31 Product Family

Downloaded from Arrow.com.

The interface is meant to be used with synchronous SIM cards. This means that the SIM module provides a clock for the SIM card to use. The frequency of this clock is normally 372 times the data rate on the TX/RX pins, however SIM module can work with CLK equal to 16 times the data rate on TX/RX pins.

There is no timing relationship between the clock and the data. The clock that the SIM module provides to the aim card will be used by the SIM card to recover the clock from the data much like a standard UART. All six (or 5 in case bi-directional TXRX is used) of the pins for each half of the SIM module are asynchronous to each other.

There are no required timing relationships between the signals in normal mode, but there are some in two specific cases: reset and power down sequences.

4.3.20.1 General Timing Requirements

Figure 73 shows the timing of the SIM module, and Figure 57 lists the timing parameters.

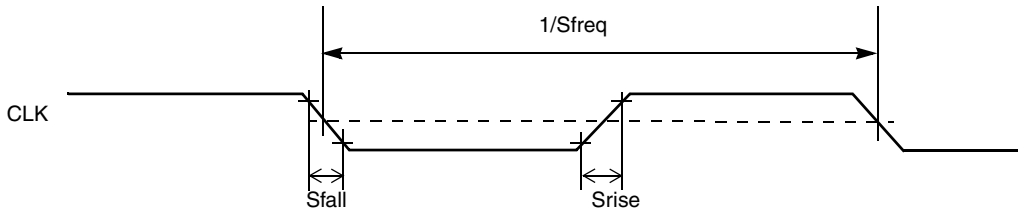

Figure 73. SIM Clock Timing Diagram

Table 57. SIM Timing Specification—High Drive Strength

Num	Description	Symbol	Min	Max	Unit
1	SIM Clock Frequency (CLK)[1]	S_{freq}	0.01	5 (Some new cards may reach 10)	MHz
2	SIM CLK Rise Time [2]	S_{rise}	—	20	ns
3	SIM CLK Fall Time [3]	S_{fall}	—	20	ns
4	SIM Input Transition Time (RX, SIMPD)	S_{trans}	—	25	ns

[1] 50% duty cycle clock
[2] With C = 50pF
[3] With C = 50pF

4.3.20.2 Reset Sequence

4.3.20.2.1 Cards with Internal Reset

The sequence of reset for this kind of SIM Cards is as follows (see Figure 74):

- After powerup, the clock signal is enabled on SGCLK (time T0)
- After 200 clock cycles, RX must be high.
- The card must send a response on RX acknowledging the reset between 400 and 40000 clock cycles after T0.

Because of an order from the United States International Trade Commission, BGA-packaged product lines and part numbers indicated here currently are not available from Freescale for import or sale in the United States prior to September 2010: i.MX31 Product Family

Downloaded from Arrow.com.

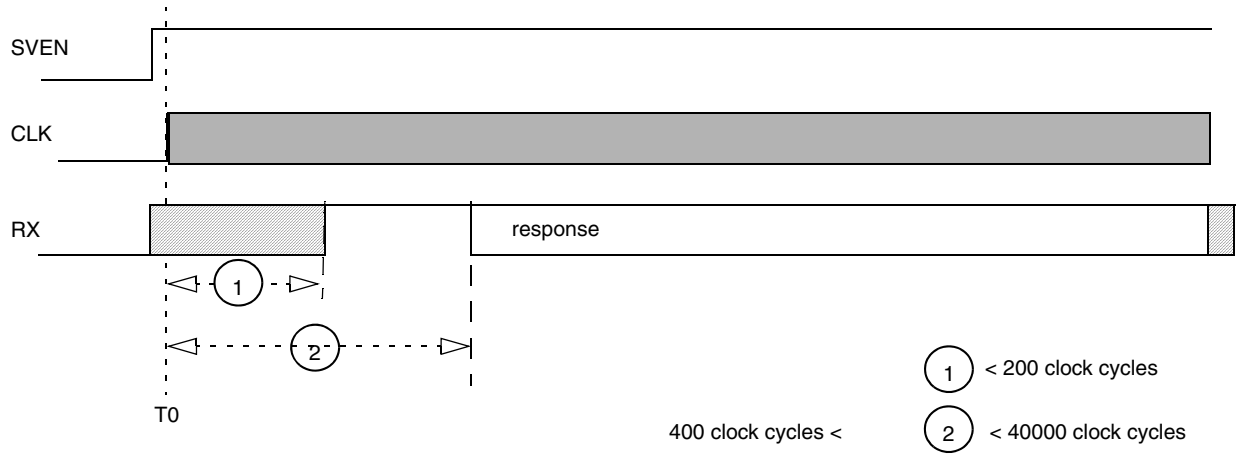

Figure 74. Internal-Reset Card Reset Sequence

4.3.20.2.2 Cards with Active Low Reset

The sequence of reset for this kind of card is as follows (see Figure 75):

1. After powerup, the clock signal is enabled on CLK (time T0)
2. After 200 clock cycles, RX must be high.
3. RST must remain Low for at least 40000 clock cycles after T0 (no response is to be received on RX during those 40000 clock cycles)
4. RST is set High (time T1)
5. RST must remain High for at least 40000 clock cycles after T1 and a response must be received on RX between 400 and 40000 clock cycles after T1.

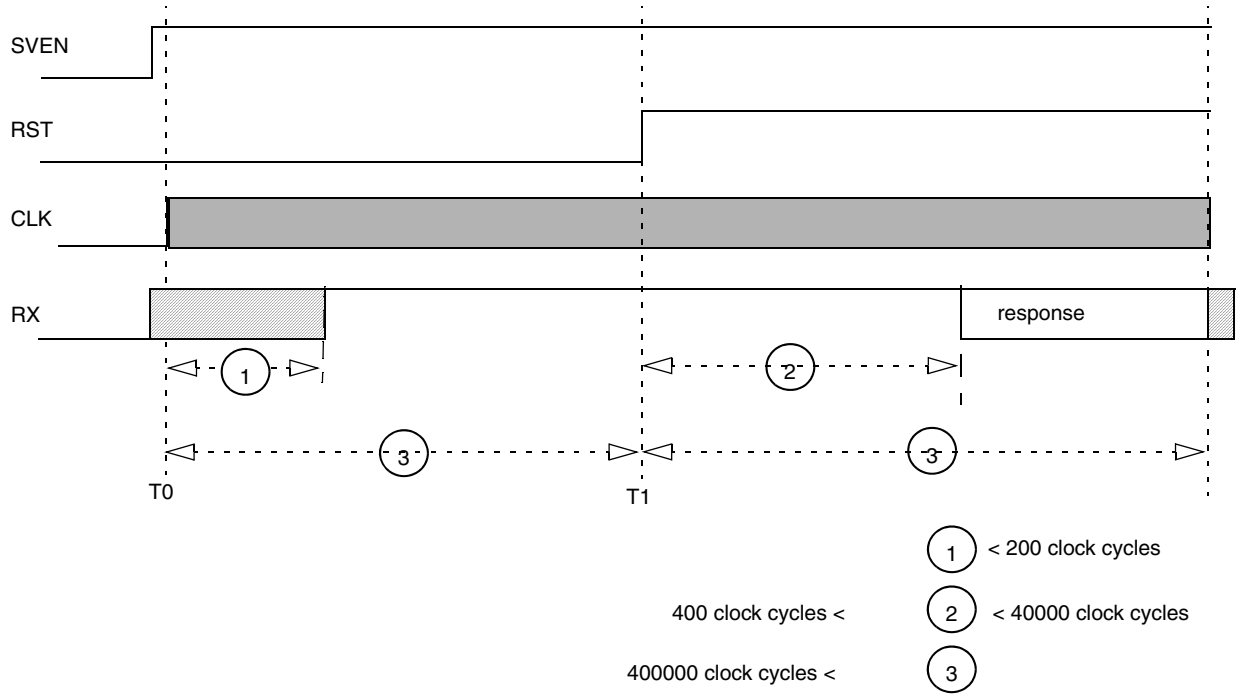

Figure 75. Active-Low-Reset Card Reset Sequence

Because of an order from the United States International Trade Commission, BGA-packaged product lines and part numbers indicated here currently are not available from Freescale for import or sale in the United States prior to September 2010: i.MX31 Product Family

Downloaded from Arrow.com.

4.3.20.3 Power Down Sequence

Power down sequence for SIM interface is as follows:

1. SIMPD port detects the removal of the SIM Card
2. RST goes Low
3. CLK goes Low
4. TX goes Low
5. VEN goes Low

Each of this steps is done in one CKIL period (usually 32 kHz). Power down can be started because of a SIM Card removal detection or launched by the processor. Figure 76 and Table 58 show the usual timing requirements for this sequence, with Fckil = CKIL frequency value.

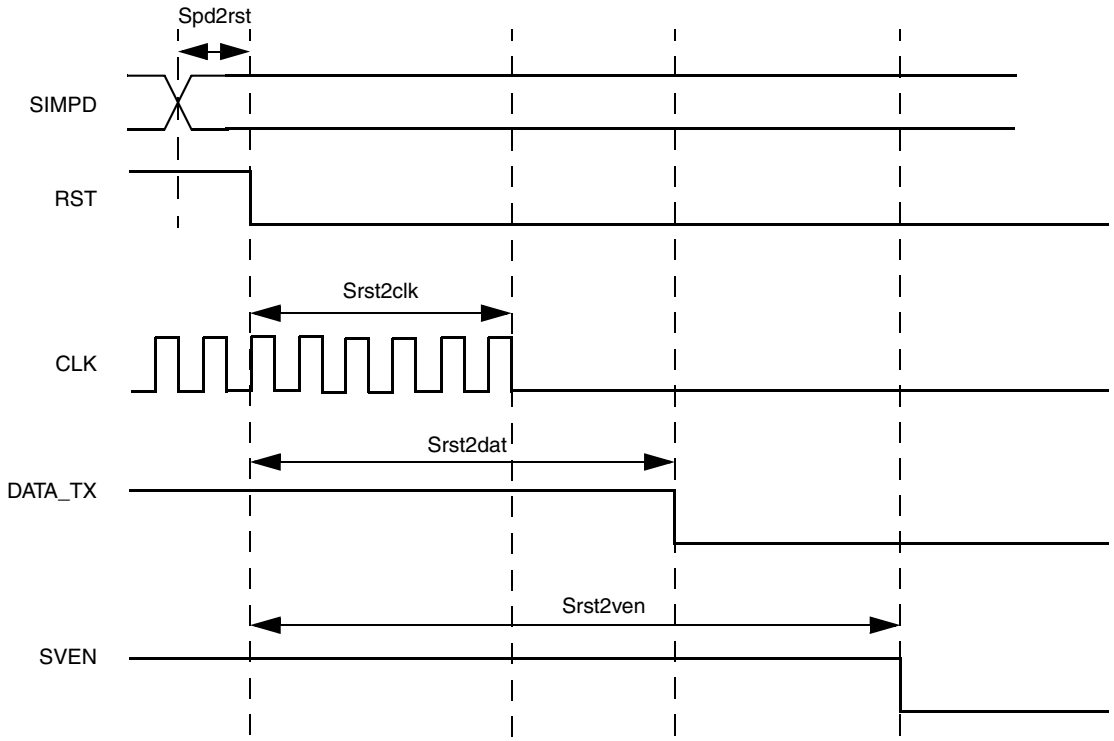

Figure 76. SmartCard Interface Power Down AC Timing

Table 58. Timing Requirements for Power Down Sequence

Num	Description	Symbol	Min	Max	Unit
1	SIM reset to SIM clock stop	$S_{rst2clk}$	0.9*1/FCKIL	0.8	µs
2	SIM reset to SIM TX data low	$S_{rst2dat}$	1.8*1/FCKIL	1.2	µs
3	SIM reset to SIM Voltage Enable Low	$S_{rst2ven}$	2.7*1/FCKIL	1.8	µs
4	SIM Presence Detect to SIM reset Low	S_{pd2rst}	0.9*1/FCKIL	25	ns

Because of an order from the United States International Trade Commission, BGA-packaged product lines and part numbers indicated here currently are not available from Freescale for import or sale in the United States prior to September 2010: i.MX31 Product Family

Downloaded from Arrow.com.

4.3.21 SJC Electrical Specifications

This section details the electrical characteristics for the SJC module. Figure 77 depicts the SJC test clock input timing. Figure 78 depicts the SJC boundary scan timing, Figure 79 depicts the SJC test access port, Figure 80 depicts the SJC $\overline{TRST}$ timing, and Table 59 lists the SJC timing parameters.

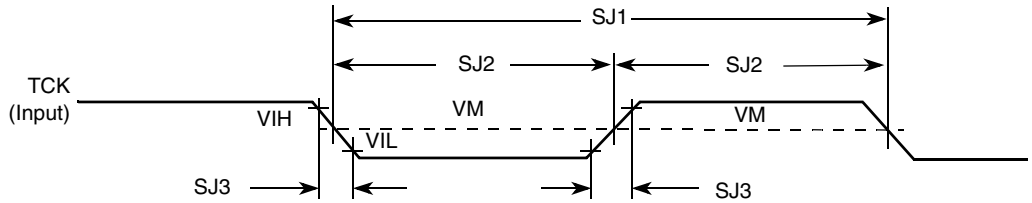

Figure 77. Test Clock Input Timing Diagram

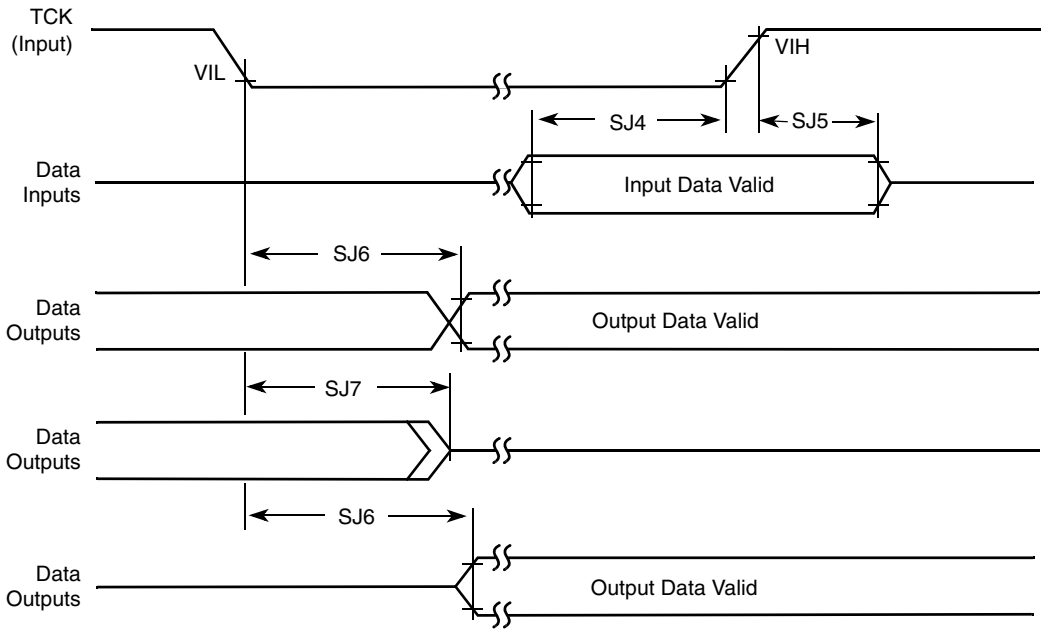

Figure 78. Boundary Scan (JTAG) Timing Diagram

Because of an order from the United States International Trade Commission, BGA-packaged product lines and part numbers indicated here currently are not available from Freescale for import or sale in the United States prior to September 2010: i.MX31 Product Family

Downloaded from Arrow.com.

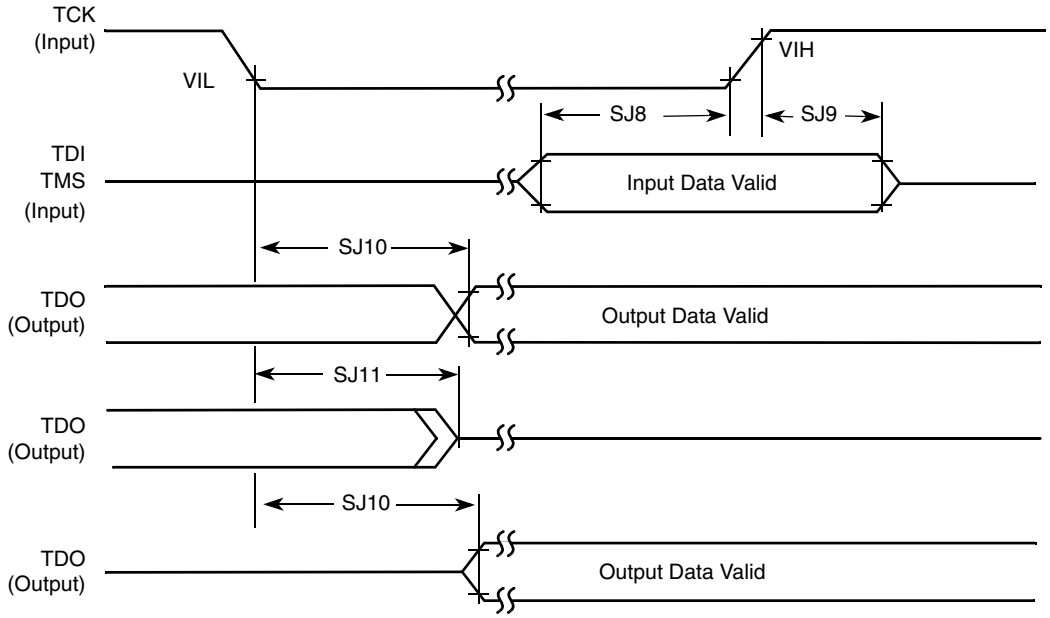

Figure 79. Test Access Port Timing Diagram

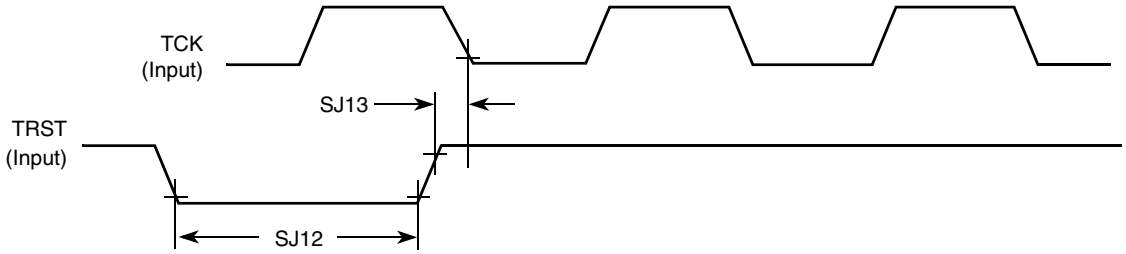

Figure 80. $\overline{\text{TRST}}$ Timing Diagram

Table 59. SJC Timing Parameters

ID	Parameter	All Frequencies		Unit
		Min	Max	
SJ1	TCK cycle time	100[1]	—	ns
SJ2	TCK clock pulse width measured at V_M[2]	40	—	ns
SJ3	TCK rise and fall times	—	3	ns
SJ4	Boundary scan input data set-up time	10	—	ns
SJ5	Boundary scan input data hold time	50	—	ns
SJ6	TCK low to output data valid	—	50	ns
SJ7	TCK low to output high impedance	—	50	ns
SJ8	TMS, TDI data set-up time	10	—	ns
SJ9	TMS, TDI data hold time	50	—	ns
SJ10	TCK low to TDO data valid	—	44	ns

Because of an order from the United States International Trade Commission, BGA-packaged product lines and part numbers indicated here currently are not available from Freescale for import or sale in the United States prior to September 2010: i.MX31 Product Family

Downloaded from Arrow.com.

Table 59. SJC Timing Parameters (continued)

ID	Parameter	All Frequencies		Unit
		Min	Max	
SJ11	TCK low to TDO high impedance	—	44	ns
SJ12	$\overline{\text{TRST}}$ assert time	100	—	ns
SJ13	$\overline{\text{TRST}}$ set-up time to TCK low	40	—	ns

[1] On cases where SDMA TAP is put in the chain, the max TCK frequency is limited by max ratio of 1:8 of SDMA core frequency to TCK limitation. This implies max frequency of 8.25 MHz (or 121.2 ns) for 66 MHz IPG clock.

[2] V_M - mid point voltage

4.3.22 SSI Electrical Specifications

This section describes the electrical information of SSI. Note the following pertaining to timing information:

- All the timings for the SSI are given for a non-inverted serial clock polarity (TSCKP/RSCKP = 0) and a non-inverted frame sync (TFSI/RFSI = 0). If the polarity of the clock and/or the frame sync have been inverted, all the timing remains valid by inverting the clock signal STCK/SRCK and/or the frame sync STFS/SRFS shown in the tables and in the figures.
- All timings are on AUDMUX signals when SSI is being used for data transfer.
- “Tx” and “Rx” refer to the Transmit and Receive sections of the SSI.
- For internal Frame Sync operation using external clock, the FS timing will be same as that of Tx Data (for example, during AC97 mode of operation).

4.3.22.1 SSI Transmitter Timing with Internal Clock

Figure 81 depicts the SSI transmitter timing with internal clock, and Table 60 lists the timing parameters.

Because of an order from the United States International Trade Commission, BGA-packaged product lines and part numbers indicated here currently are not available from Freescale for import or sale in the United States prior to September 2010: i.MX31 Product Family

Downloaded from Arrow.com.

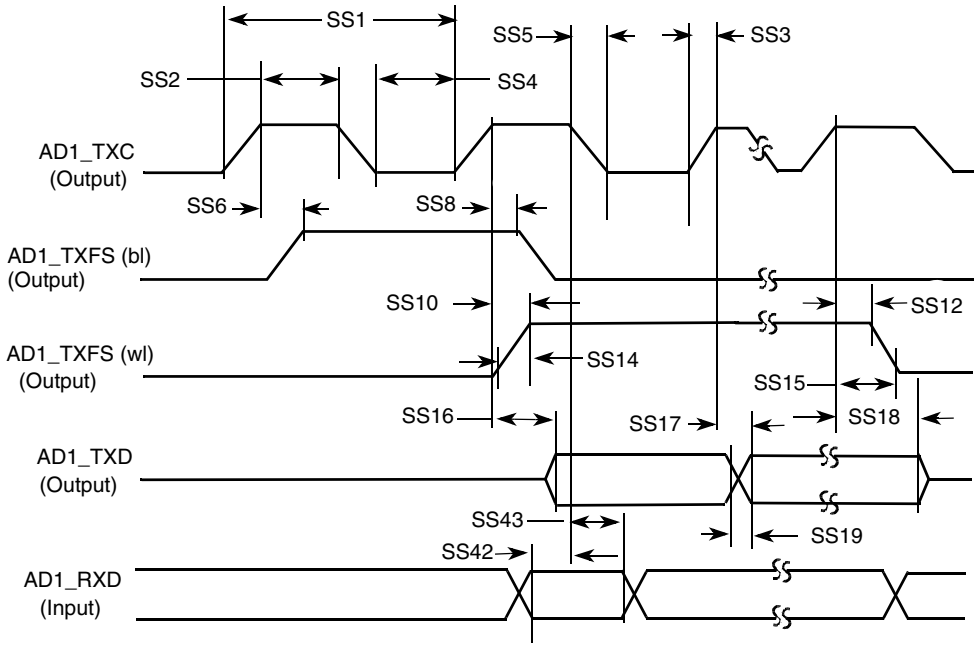

Note: SRXD Input in Synchronous mode only

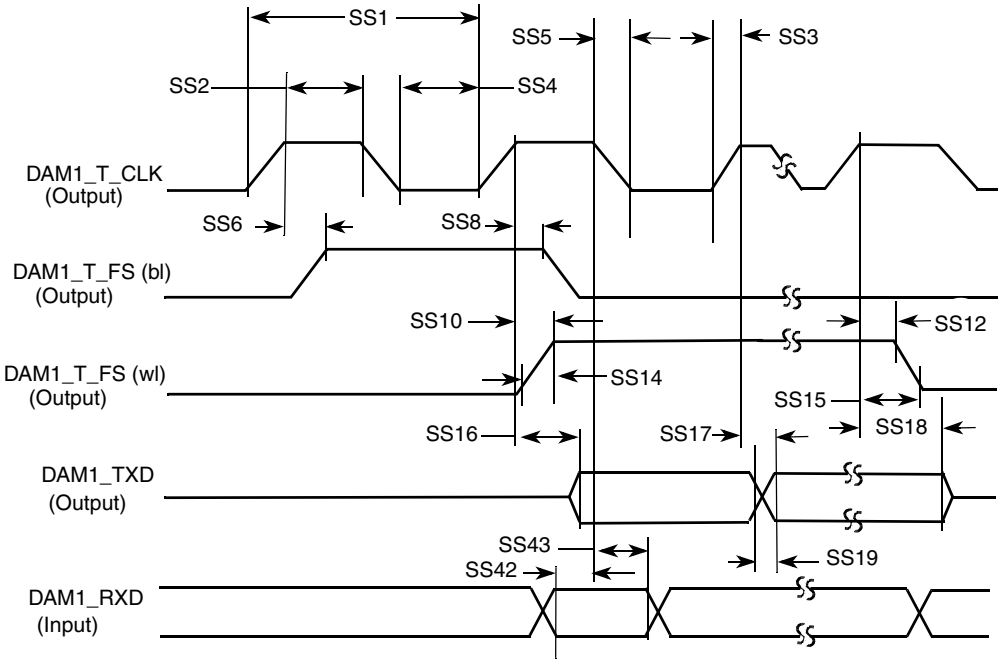

Note: SRXD Input in Synchronous mode only

Figure 81. SSI Transmitter with Internal Clock Timing Diagram

Because of an order from the United States International Trade Commission, BGA-packaged product lines and part numbers indicated here currently are not available from Freescale for import or sale in the United States prior to September 2010: i.MX31 Product Family

Downloaded from Arrow.com.

Table 60. SSI Transmitter with Internal Clock Timing Parameters

ID	Parameter	Min	Max	Unit
Internal Clock Operation				
SS1	(Tx/Rx) CK clock period	81.4	—	ns
SS2	(Tx/Rx) CK clock high period	36.0	—	ns
SS3	(Tx/Rx) CK clock rise time	—	6	ns
SS4	(Tx/Rx) CK clock low period	36.0	—	ns
SS5	(Tx/Rx) CK clock fall time	—	6	ns
SS6	(Tx) CK high to FS (bl) high	—	15.0	ns
SS8	(Tx) CK high to FS (bl) low	—	15.0	ns
SS10	(Tx) CK high to FS (wl) high	—	15.0	ns
SS12	(Tx) CK high to FS (wl) low	—	15.0	ns
SS14	(Tx/Rx) Internal FS rise time	—	6	ns
SS15	(Tx/Rx) Internal FS fall time	—	6	ns
SS16	(Tx) CK high to STXD valid from high impedance	—	15.0	ns
SS17	(Tx) CK high to STXD high/low	—	15.0	ns
SS18	(Tx) CK high to STXD high impedance	—	15.0	ns
SS19	STXD rise/fall time	—	6	ns
Synchronous Internal Clock Operation				
SS42	SRXD setup before (Tx) CK falling	10.0	—	ns
SS43	SRXD hold after (Tx) CK falling	0	—	ns
SS52	Loading	—	25	pF

Because of an order from the United States International Trade Commission, BGA-packaged product lines and part numbers indicated here currently are not available from Freescale for import or sale in the United States prior to September 2010: i.MX31 Product Family

Downloaded from Arrow.com.

4.3.22.2 SSI Receiver Timing with Internal Clock

Figure 82 depicts the SSI receiver timing with internal clock, and Table 61 lists the timing parameters.

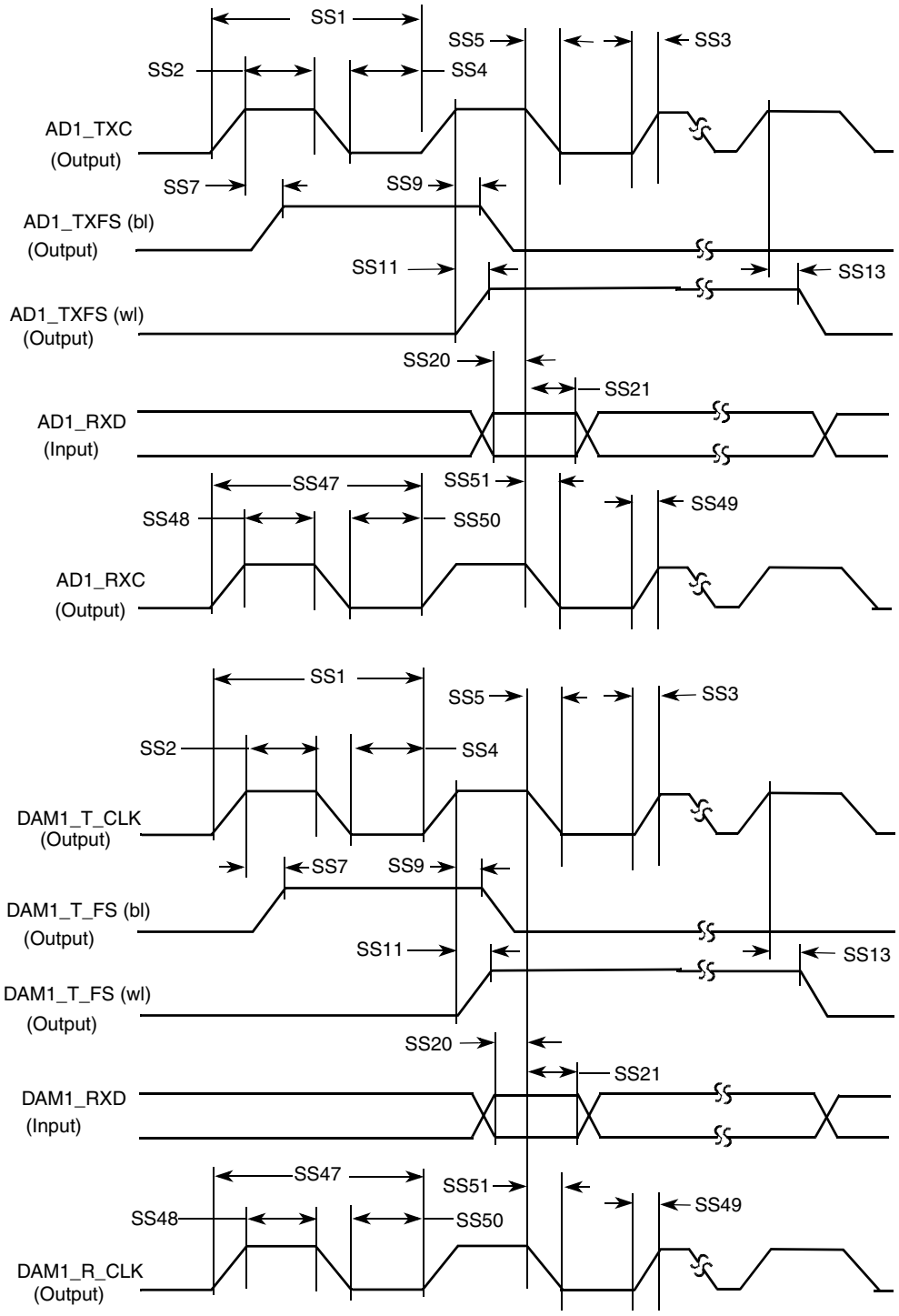

Figure 82. SSI Receiver with Internal Clock Timing Diagram

Because of an order from the United States International Trade Commission, BGA-packaged product lines and part numbers indicated here currently are not available from Freescale for import or sale in the United States prior to September 2010: i.MX31 Product Family

Downloaded from Arrow.com.

Table 61. SSI Receiver with Internal Clock Timing Parameters

ID	Parameter	Min	Max	Unit
Internal Clock Operation				
SS1	(Tx/Rx) CK clock period	81.4	—	ns
SS2	(Tx/Rx) CK clock high period	36.0	—	ns
SS3	(Tx/Rx) CK clock rise time	—	6	ns
SS4	(Tx/Rx) CK clock low period	36.0	—	ns
SS5	(Tx/Rx) CK clock fall time	—	6	ns
SS7	(Rx) CK high to FS (bl) high	—	15.0	ns
SS9	(Rx) CK high to FS (bl) low	—	15.0	ns
SS11	(Rx) CK high to FS (wl) high	—	15.0	ns
SS13	(Rx) CK high to FS (wl) low	—	15.0	ns
SS20	SRXD setup time before (Rx) CK low	10.0	—	ns
SS21	SRXD hold time after (Rx) CK low	0	—	ns
Oversampling Clock Operation				
SS47	Oversampling clock period	15.04	—	ns
SS48	Oversampling clock high period	6	—	ns
SS49	Oversampling clock rise time	—	3	ns
SS50	Oversampling clock low period	6	—	ns
SS51	Oversampling clock fall time	—	3	ns

Because of an order from the United States International Trade Commission, BGA-packaged product lines and part numbers indicated here currently are not available from Freescale for import or sale in the United States prior to September 2010: i.MX31 Product Family

Downloaded from Arrow.com.

4.3.22.3 SSI Transmitter Timing with External Clock

Figure 83 depicts the SSI transmitter timing with external clock, and Table 62 lists the timing parameters.

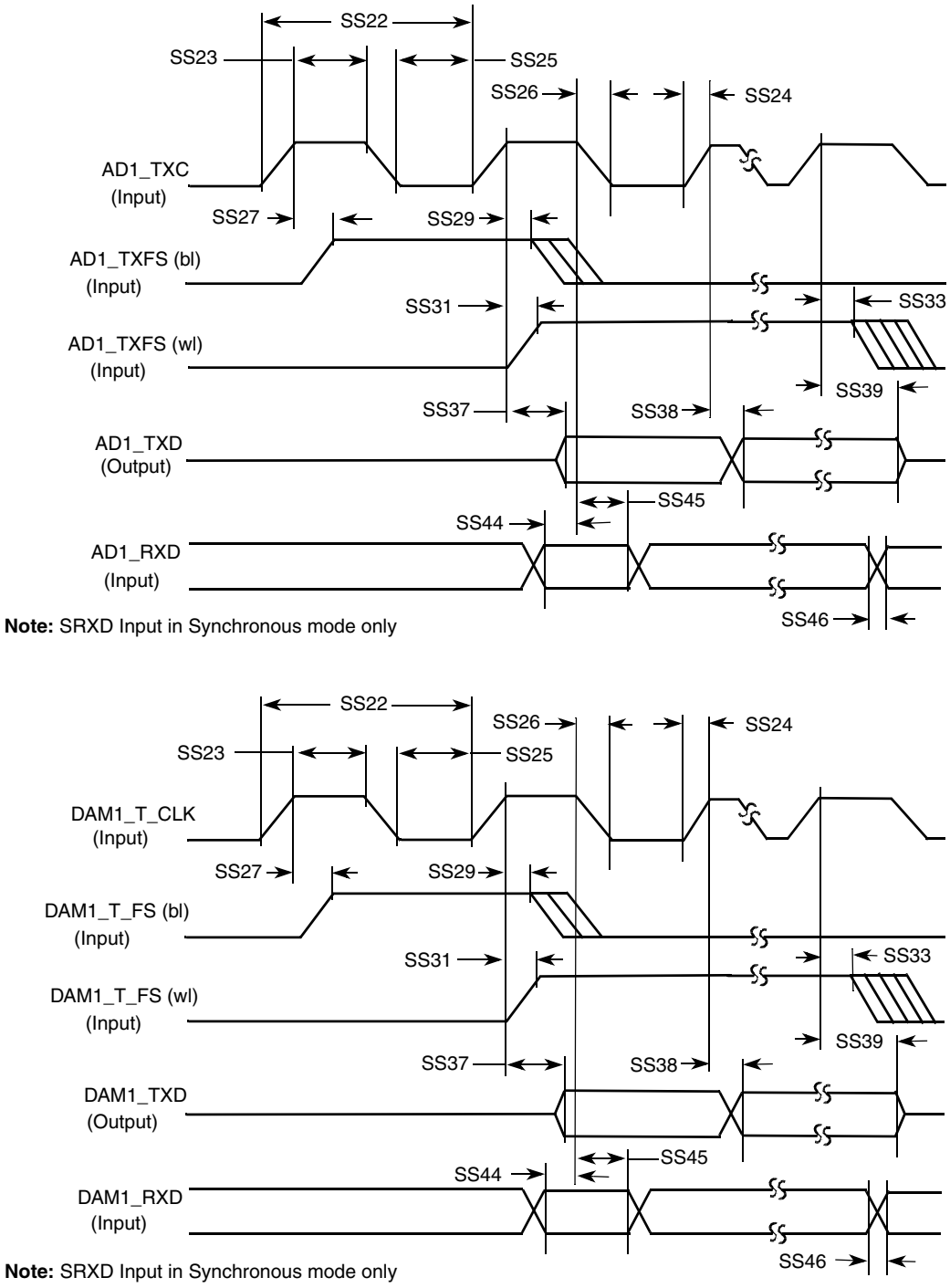

Figure 83. SSI Transmitter with External Clock Timing Diagram

Because of an order from the United States International Trade Commission, BGA-packaged product lines and part numbers indicated here currently are not available from Freescale for import or sale in the United States prior to September 2010: i.MX31 Product Family

Downloaded from Arrow.com.

Table 62. SSI Transmitter with External Clock Timing Parameters

ID	Parameter	Min	Max	Unit
External Clock Operation				
SS22	(Tx/Rx) CK clock period	81.4	—	ns
SS23	(Tx/Rx) CK clock high period	36.0	—	ns
SS24	(Tx/Rx) CK clock rise time	—	6.0	ns
SS25	(Tx/Rx) CK clock low period	36.0	—	ns
SS26	(Tx/Rx) CK clock fall time	—	6.0	ns
SS27	(Tx) CK high to FS (bl) high	–10.0	15.0	ns
SS29	(Tx) CK high to FS (bl) low	10.0	—	ns
SS31	(Tx) CK high to FS (wl) high	–10.0	15.0	ns
SS33	(Tx) CK high to FS (wl) low	10.0	—	ns
SS37	(Tx) CK high to STXD valid from high impedance	—	15.0	ns
SS38	(Tx) CK high to STXD high/low	—	15.0	ns
SS39	(Tx) CK high to STXD high impedance	—	15.0	ns
Synchronous External Clock Operation				
SS44	SRXD setup before (Tx) CK falling	10.0	—	ns
SS45	SRXD hold after (Tx) CK falling	2.0	—	ns
SS46	SRXD rise/fall time	—	6.0	ns

Because of an order from the United States International Trade Commission, BGA-packaged product lines and part numbers indicated here currently are not available from Freescale for import or sale in the United States prior to September 2010: i.MX31 Product Family

Downloaded from Arrow.com.

4.3.22.4 SSI Receiver Timing with External Clock

Figure 84 depicts the SSI receiver timing with external clock, and Table 63 lists the timing parameters.

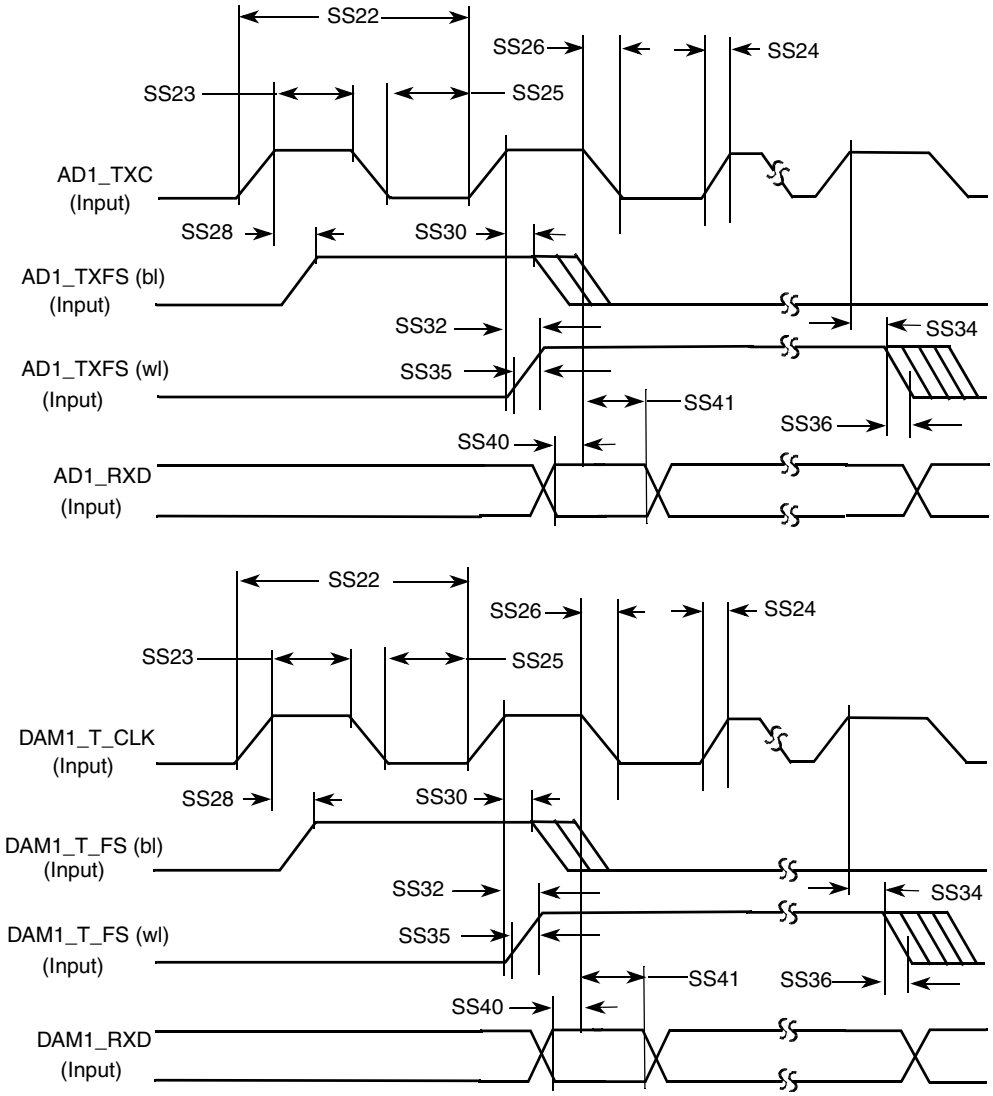

Figure 84. SSI Receiver with External Clock Timing Diagram

Table 63. SSI Receiver with External Clock Timing Parameters

ID	Parameter	Min	Max	Unit
External Clock Operation				
SS22	(Tx/Rx) CK clock period	81.4	—	ns
SS23	(Tx/Rx) CK clock high period	36.0	—	ns
SS24	(Tx/Rx) CK clock rise time	—	6.0	ns
SS25	(Tx/Rx) CK clock low period	36.0	—	ns
SS26	(Tx/Rx) CK clock fall time	—	6.0	ns

Because of an order from the United States International Trade Commission, BGA-packaged product lines and part numbers indicated here currently are not available from Freescale for import or sale in the United States prior to September 2010: i.MX31 Product Family

Downloaded from Arrow.com.

Table 63. SSI Receiver with External Clock Timing Parameters (continued)

ID	Parameter	Min	Max	Unit
SS28	(Rx) CK high to FS (bl) high	–10.0	15.0	ns
SS30	(Rx) CK high to FS (bl) low	10.0	—	ns
SS32	(Rx) CK high to FS (wl) high	–10.0	15.0	ns
SS34	(Rx) CK high to FS (wl) low	10.0	—	ns
SS35	(Tx/Rx) External FS rise time	—	6.0	ns
SS36	(Tx/Rx) External FS fall time	—	6.0	ns
SS40	SRXD setup time before (Rx) CK low	10.0	—	ns
SS41	SRXD hold time after (Rx) CK low	2.0	—	ns

4.3.23 USB Electrical Specifications

This section describes the electrical information of the USBOTG port. The OTG port supports both serial and parallel interfaces.

The high speed (HS) interface is supported via the ULPI (Ultra Low Pin Count Interface). Figure 85 depicts the USB ULPI timing diagram, and Table 64 lists the timing parameters.

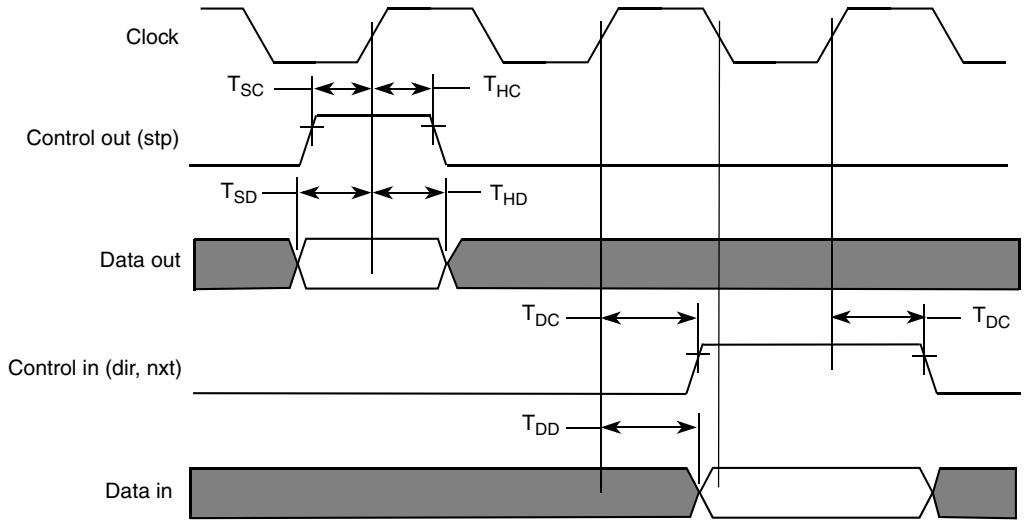

Figure 85. USB ULPI Interface Timing Diagram

Table 64. USB ULPI Interface Timing Specification[1]

Parameter	Symbol	Min	Max	Units
Setup time (control in, 8-bit data in)	T_{SC}, T_{SD}	6	—	ns
Hold time (control in, 8-bit data in)	T_{HC}, T_{HD}	0	—	ns
Output delay (control out, 8-bit data out)	T_{DC}, T_{DD}	—	9	ns

[1] Timing parameters are given as viewed by transceiver side.

Because of an order from the United States International Trade Commission, BGA-packaged product lines and part numbers indicated here currently are not available from Freescale for import or sale in the United States prior to September 2010: i.MX31 Product Family

Downloaded from Arrow.com.

5 Package Information and Pinout

This section includes the contact assignment information and mechanical package drawing for the MCIMX31.

5.1 MAPBGA Production Package—457 14 x 14 mm, 0.5 mm Pitch

This section contains the outline drawing, signal assignment map (see Section 8, "Revision History," Table 70 for the 0.5 mm 14 × 14 MAPBGA signal assignments), and MAPBGA ground/power ID by ball grid location for the 457 14 x 14 mm, 0.5 mm pitch package.

5.1.1 Production Package Outline Drawing–14 x 14 mm 0.5 mm

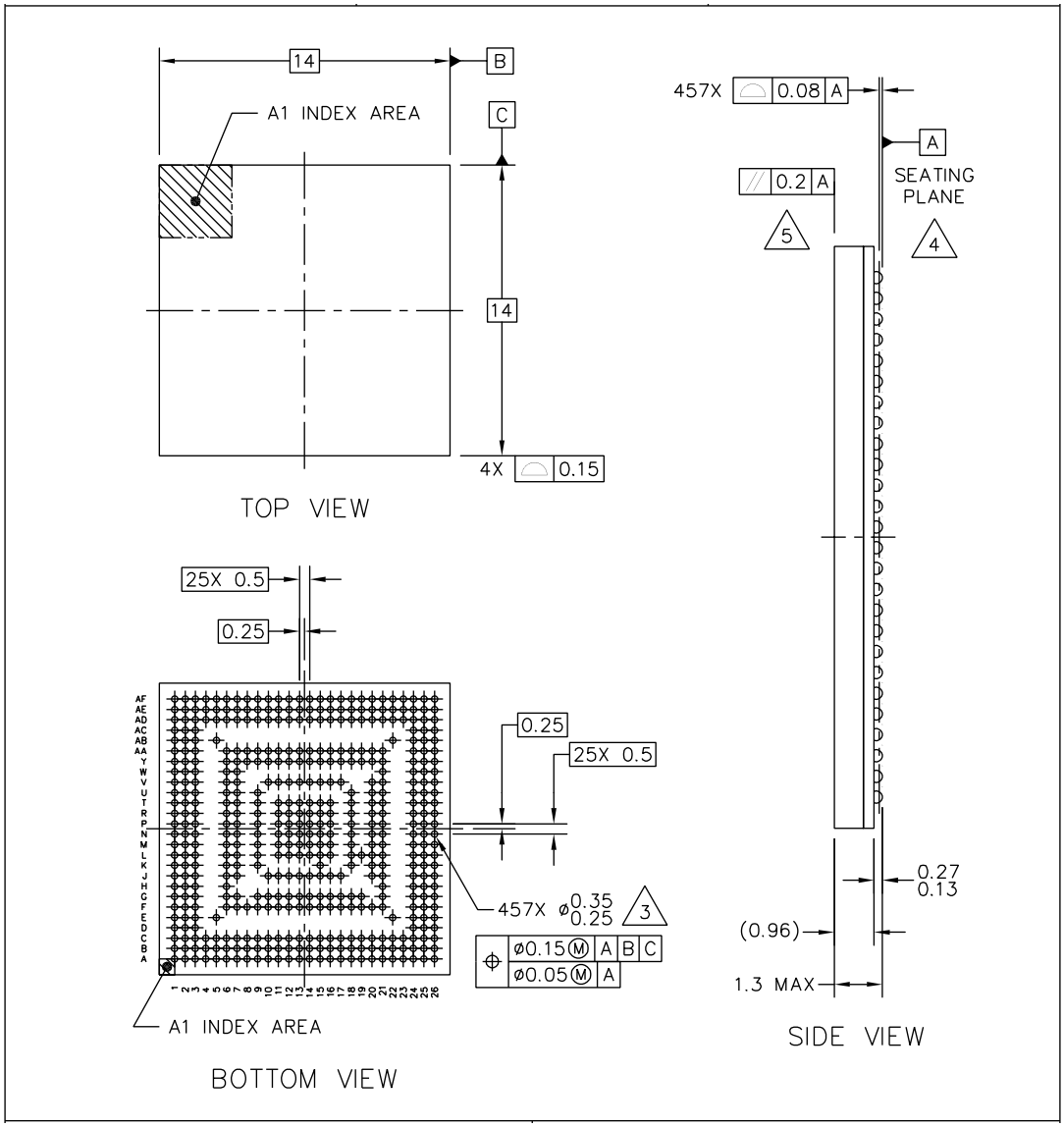

Figure 86. Production Package: Case 1581—0.5 mm Pitch

Because of an order from the United States International Trade Commission, BGA-packaged product lines and part numbers indicated here currently are not available from Freescale for import or sale in the United States prior to September 2010: i.MX31 Product Family

Downloaded from Arrow.com.

5.1.2 MAPBGA Signal Assignment–14 × 14 mm 0.5 mm

See Section 8, "Revision History," Figure 70 for the 0.5 mm 14 × 14 MAPBGA signal assignments.

5.1.3 Connection Tables–14 x 14 mm 0.5 mm

Table 65 shows the device connection list for power and ground, alpha-sorted. Table 66 shows the device connection list for signals.

5.1.3.1 Ground and Power ID Locations–14 x 14 mm 0.5 mm

Table 65. 14 x 14 MAPBGA Ground/Power ID by Ball Grid Location

GND/PWR ID	Ball Location
FGND	AB24
FUSE_VDD	AC24
FVCC	AA24
GND	A1, A2, A25, A26, B1, B2, B25, B26, C1, C2, C24, C25, C26, D1, D25, E22, E24, F21, L12, M11, M12, M13, M14, M15, M16, N12, N13, N14, N15, N16, P12, P13, P14, P15, P16, R12, R13, R14, R15, R16, T12, T13, V17, AC2, AC26, AD1, AD2, AD24, AD25, AD26, AE1, AE2, AE24, AE25, AE26, AF1, AF2, AF25, AF26
IOQVDD	Y6
MGND	T15
MVCC	V15
NVCC1	G19, G21, K18
NVCC2	Y17, Y18, Y19, Y20
NVCC3	L9, M9, N11
NVCC4	L18, L19
NVCC5	E5, F6, G7
NVCC6	J15, J16, K15
NVCC7	N18, P18, R18, T18
NVCC8	J12, J13
NVCC9	J17
NVCC10	P9, P11, R11, T11
NVCC21	Y14, Y15, Y16
NVCC22	W7, Y7, Y8, Y9, Y10, Y11, Y12, Y13, AA6
QVCC	J14, L13, L14, L15, L16, M18, U18, V10, V11, V12, V13
QVCC1	J10, J11, K9, L11
QVCC4	N9, R9, T9, U9
SGND	T14
SVCC	V14
UVCC	V16
UGND	T16

Because of an order from the United States International Trade Commission, BGA-packaged product lines and part numbers indicated here currently are not available from Freescale for import or sale in the United States prior to September 2010: i.MX31 Product Family

Downloaded from Arrow.com.

5.1.3.2 BGA Signal ID by Ball Grid Location–14 x 14 0.5 mm

Table 66 shows the device connection list for signals only, alpha-sorted by signal identification.

Table 66. 14 x 14 BGA Signal ID by Ball Grid Location

Signal ID	Ball Location	Signal ID	Ball Location
A0	AD6	CKIL	H21
A1	AF5	CLKO	C23
A10	AF18	CLKSS	G26
A11	AC3	COMPARE	G18
A12	AD3	CONTRAST	R24
A13	AD4	CS0	AE23
A14	AF17	CS1	AF23
A15	AF16	CS2	AE21
A16	AF15	CS3	AD22
A17	AF14	CS4	AF24
A18	AF13	CS5	AF22
A19	AF12	CSI_D10	M24
A2	AB5	CSI_D11	L26
A20	AF11	CSI_D12	M21
A21	AF10	CSI_D13	M25
A22	AF9	CSI_D14	M20
A23	AF8	CSI_D15	M26
A24	AF7	CSI_D4	L21
A25	AF6	CSI_D5	K25
A3	AE4	CSI_D6	L24
A4	AA3	CSI_D7	K26
A5	AF4	CSI_D8	L20
A6	AB3	CSI_D9	L25
A7	AE3	CSI_HSYNC	K20
A8	AD5	CSI_MCLK	K24
A9	AF3	CSI_PIXCLK	J26
ATA_CS0	J6	CSI_VSYNC	J25
ATA_CS1	F2	CSPI1_MISO	P7
ATA_DIOR	E2	CSPI1_MOSI	P2
ATA_DIOW	H6	CSPI1_SCLK	N2
ATA_DMACK	F1	CSPI1_SPI_RDY	N3
$\overline{\text{ATA_RESET}}$	H3	CSPI1_SS0	P3
BATT_LINE	F7	CSPI1_SS1	P1
BCLK	AB26	CSPI1_SS2	P6
BOOT_MODE0	F20	CSPI2_MISO	A4
BOOT_MODE1	C21	CSPI2_MOSI	E3
BOOT_MODE2	D24	CSPI2_SCLK	C7
BOOT_MODE3	C22	CSPI2_SPI_RDY	B6
BOOT_MODE4	D26	CSPI2_SS0	B5
CAPTURE	A22	CSPI2_SS1	C6
CAS	AD20	CSPI2_SS2	A5
CE_CONTROL	A14	CSPI3_MISO	G3
CKIH	F24	CSPI3_MOSI	D2

Because of an order from the United States International Trade Commission, BGA-packaged product lines and part numbers indicated here currently are not available from Freescale for import or sale in the United States prior to September 2010: i.MX31 Product Family

Downloaded from Arrow.com.

Table 66. 14 x 14 BGA Signal ID by Ball Grid Location (continued)

Signal ID	Ball Location
CSPI3_SCLK	E1
CSPI3_SPI_RDY	G6
CTS1	B11
CTS2	G13
D0	AB2
D1	Y3
D10	Y1
D11	U7
D12	W2
D13	V3
D14	W1
D15	U6
D2	AB1
D3	W6
D3_CLS	R20
D3_REV	T26
D3_SPL	U25
D4	AA2
D5	V7
D6	AA1
D7	W3
D8	Y2
D9	V6
DCD_DCE1	B12
DCD_DTE1	B13
$\overline{DE}$	C18
DQM0	AE19
DQM1	AD19
DQM2	AA20
DQM3	AE18
DRDY0	N26
DSR_DCE1	A11
DSR_DTE1	A12
DTR_DCE1	C11
DTR_DCE2	F12
DTR_DTE1	C12
DVFS0	E25
DVFS1	G24
EB0	W21
EB1	Y24
ECB	AD23
FPSHIFT	N21
GPIO1_0	F18
GPIO1_1	B23
GPIO1_2	C20
LD7	W25

Signal ID	Ball Location
GPIO1_3	F25
GPIO1_4	F19
GPIO1_5 (PWR RDY)	B24
GPIO1_6	A23
GPIO3_0	K21
GPIO3_1	H26
HSYNC	N25
I2C_CLK	J24
I2C_DAT	H25
IOIS16	J3
KEY_COL0	C15
KEY_COL1	B17
KEY_COL2	G15
KEY_COL3	A17
KEY_COL4	C16
KEY_COL5	B18
KEY_COL6	F15
KEY_COL7	A18
KEY_ROW0	F13
KEY_ROW1	B15
KEY_ROW2	C14
KEY_ROW3	A15
KEY_ROW4	G14
KEY_ROW5	B16
KEY_ROW6	F14
KEY_ROW7	A16
L2PG	See VPG1
LBA	AE22
LCS0	P26
LCS1	P21
LD0	T24
LD1	U26
LD10	V24
LD11	Y25
LD12	Y26
LD13	V21
LD14	AA25
LD15	W24
LD16	AA26
LD17	V20
LD2	T21
LD3	V25
LD4	T20
LD5	V26
LD6	U24
SCK6	T2

Because of an order from the United States International Trade Commission, BGA-packaged product lines and part numbers indicated here currently are not available from Freescale for import or sale in the United States prior to September 2010: i.MX31 Product Family

Downloaded from Arrow.com.

Table 66. 14 x 14 BGA Signal ID by Ball Grid Location (continued)

Signal ID	Ball Location
LD8	U21
LD9	W26
M_GRANT	Y21
M_REQUEST	AC25
MA10	AC1
MCUPG	See VPG0
NFALE	V1
$\overline{\text{NFCE}}$	T6
NFCLE	U3
NFRB	U1
$\overline{\text{NFRE}}$	V2
$\overline{\text{NFWE}}$	T7
$\overline{\text{NFWP}}$	U2
OE	AB25
PAR_RS	R21
PC_BVD1	H2
PC_BVD2	K6
$\overline{\text{PC_CD1}}$	L7
$\overline{\text{PC_CD2}}$	K1
PC_POE	J7
PC_PWRON	K3
PC_READY	J2
PC_RST	H1
$\overline{\text{PC_RW}}$	G2
PC_VS1	J1
PC_VS2	K7
$\overline{\text{PC_WAIT}}$	L6
$\overline{\text{POR}}$	H24
POWER_FAIL	E26
PWMO	G1
RAS	AF19
READ	P20
$\overline{\text{RESET_IN}}$	J21
RI_DCE1	F11
RI_DTE1	G12
RTCK	C17
RTS1	G11
RTS2	B14
RW	AB22
RXD1	A10
RXD2	A13
SCK3	R2
SCK4	C4
SCK5	D3
SDCKE0	AD21
SDCKE1	AF21

Signal ID	Ball Location
SCLK0	B22
SD_D_CLK	P24
SD_D_I	N20
SD_D_IO	P25
SD0	AD18
SD1	AE17
SD1_CLK	M7
SD1_CMD	L2
SD1_DATA0	M6
SD1_DATA1	L1
SD1_DATA2	L3
SD1_DATA3	K2
SD10	AE15
SD11	AE14
SD12	AD14
SD13	AA14
SD14	AE13
SD15	AD13
SD16	AA13
SD17	AD12
SD18	AA12
SD19	AE11
SD2	AA19
SD20	AE10
SD21	AA11
SD22	AE9
SD23	AA10
SD24	AE8
SD25	AD10
SD26	AE7
SD27	AA9
SD28	AA8
SD29	AD9
SD3	AA18
SD30	AE6
SD31	AA7
SD4	AD17
SD5	AA17
SD6	AE16
SD7	AA16
SD8	AD15
SD9	AA15
SDBA0	AD7
SDBA1	AE5
TRSTB	B20
TTM_PAD	U20

Because of an order from the United States International Trade Commission, BGA-packaged product lines and part numbers indicated here currently are not available from Freescale for import or sale in the United States prior to September 2010: i.MX31 Product Family

Downloaded from Arrow.com.

Table 66. 14 x 14 BGA Signal ID by Ball Grid Location (continued)

Signal ID	Ball Location
SDCLK	AA21
$\overline{\text{SDCLK}}$	AE20
SDQS0	AD16
SDQS1	AE12
SDQS2	AD11
SDQS3	AD8
SDWE	AF20
SER_RS	T25
SFS3	R6
SFS4	F3
SFS5	A3
SFS6	T3
SIMPD0	G17
SJC_MOD	A20
SRST0	C19
SRX0	B21
SRXD3	R3
SRXD4	C3
SRXD5	B4
SRXD6	R7
STX0	F17
STXD3	R1
STXD4	B3
STXD5	C5
STXD6	T1
SVEN0	A21
TCK	B19
TDI	F16
TDO	A19
TMS	G16

Signal ID	Ball Location
TXD1	F10
TXD2	C13
USB_BYP	A9
USB_OC	C10
USB_PWR	B10
USBH2_CLK	N1
USBH2_DATA0	M1
USBH2_DATA1	M3
USBH2_DIR	N7
USBH2_NXT	N6
USBH2_STP	M2
USBOTG_CLK	G10
USBOTG_DATA0	F9
USBOTG_DATA1	B8
USBOTG_DATA2	G9
USBOTG_DATA3	A7
USBOTG_DATA4	C8
USBOTG_DATA5	B7
USBOTG_DATA6	F8
USBOTG_DATA7	A6
USBOTG_DIR	B9
USBOTG_NXT	A8
USBOTG_STP	C9
VPG0	G25
VPG1	J20
VSTBY	F26
VSYNC0	N24
VSYNC3	R26
WATCHDOG_RST	A24
WRITE	R25

Because of an order from the United States International Trade Commission, BGA-packaged product lines and part numbers indicated here currently are not available from Freescale for import or sale in the United States prior to September 2010: i.MX31 Product Family

Downloaded from Arrow.com.

5.2 MAPBGA Production Package—473 19 x 19 mm, 0.8 mm Pitch

This section contains the outline drawing, signal assignment map (see Section 8, "Revision History," Table 71 for the 19 x 19 mm, 0.8 mm pitch signal assignments), and MAPBGA ground/power ID by ball grid location for the 473 19 x 19 mm, 0.8 mm pitch package.

5.2.1 Production Package Outline Drawing–19 x 19 mm 0.8 mm

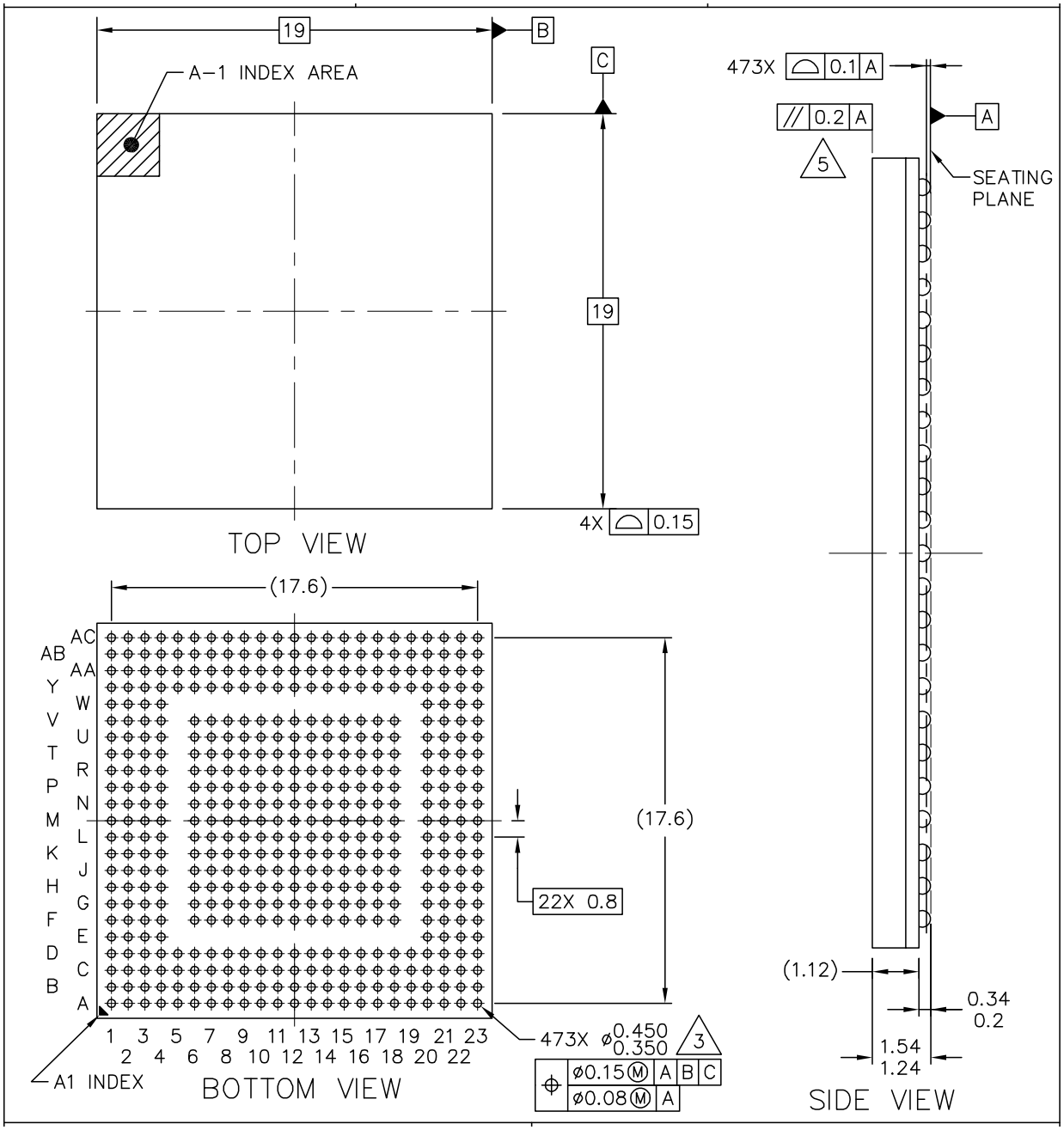

Figure 87. Production Package: Case 1931—0.8 mm Pitch

Because of an order from the United States International Trade Commission, BGA-packaged product lines and part numbers indicated here currently are not available from Freescale for import or sale in the United States prior to September 2010: i.MX31 Product Family

Downloaded from Arrow.com.

5.2.2 MAPBGA Signal Assignment–19 × 19 mm 0.8 mm

See Table 71 for the 19 × 19 mm, 0.8 mm pitch signal assignments/ball map.

5.2.3 Connection Tables–19 x 19 mm 0.8 mm

Table 67 shows the device connection list for power and ground, alpha-sorted followed by Table 68, which shows the no-connects. Table 69 shows the device connection list for signals.

5.2.3.1 Ground and Power ID Locations—19 x 19 mm 0.8 mm

Table 67. 19 x 19 BGA Ground/Power ID by Ball Grid Location

GND/PWR ID	Ball Location
FGND	U16
FUSE_VDD	T15
FVCC	T16
GND	A1, A2, A3, A21, A22, A23, B1, B2, B22, B23, C1, C2, C22, C23, D22, D23, J12, J13, K10, K11, K12, K13, K14, L10, L11, L12, L13, L14, M9, M10, M11, M12, M13, M14, N10, N11, N12, N13, N14, P10, P11, P12, P13, P14, R12, Y1, Y23, AA1, AA2, AA22, AA23, AB1, AB2, AB21, AB22, AB23, AC1, AC2, AC21, AC22, AC23
IOQVDD	T8
MGND	U14
MVCC	U15
NVCC1	G15, G16, H16, J17
NVCC2	N16, P16, R15, R16, T14
NVCC3	K7, K8, L7, L8
NVCC4	H14, J15, K15
NVCC5	G9, G10, H8, H9
NVCC6	G11, G12, G13, H12
NVCC7	H15, J16, K16, L16, M16
NVCC8	H10, H11, J11
NVCC9	G14
NVCC10	P8, R7, R8, R9, T9
NVCC21	T11, T12, T13, U11
NVCC22	T10, U7, U8, U9, U10, V6, V7, V8, V9, V10
QVCC	H13, J14, L15, M15, N9, N15, P9, P15, R10, R11, R13, R14
QVCC1	J8, J9, J10, K9
QVCC4	L9, M7, M8, N8
SGND	U13
SVCC	U12
UVCC	P18
UGND	P17

Because of an order from the United States International Trade Commission, BGA-packaged product lines and part numbers indicated here currently are not available from Freescale for import or sale in the United States prior to September 2010: i.MX31 Product Family

Downloaded from Arrow.com.

Table 68. 19 x 19 BGA No Connects[1]

Signal	Ball Location
NC	N7
NC	P7
NC	U21

[1] These contacts are not used and must be floated by the user.

5.2.3.2 BGA Signal ID by Ball Grid Location—19 x 19 0.8 mm

Table 69. 19 x 19 BGA Signal ID by Ball Grid Location

Signal ID	Ball Location	Signal ID	Ball Location
A0	Y6	CKIL	E21
A1	AC5	CLKO	C20
A10	V15	CLKSS	H17
A11	AB3	COMPARE	A20
A12	AA3	CONTRAST	N21
A13	Y3	CS0	U17
A14	Y15	CS1	Y22
A15	Y14	CS2	Y18
A16	V14	CS3	Y19
A17	Y13	CS4	Y20
A18	V13	CS5	AA21
A19	Y12	CSI_D10	K21
A2	AB5	CSI_D11	K22
A20	V12	CSI_D12	K23
A21	Y11	CSI_D13	L20
A22	V11	CSI_D14	L18
A23	Y10	CSI_D15	L21
A24	Y9	CSI_D4	J20
A25	Y8	CSI_D5	J21
A3	AA5	CSI_D6	L17
A4	Y5	CSI_D7	J22
A5	AC4	CSI_D8	J23
A6	AB4	CSI_D9	K20
A7	AA4	CSI_HSYNC	H22
A8	Y4	CSI_MCLK	H20
A9	AC3	CSI_PIXCLK	H23
ATA_CS0	E1	CSI_VSYNC	H21
ATA_CS1	G4	CSPI1_MISO	N2
ATA_DIOR	E3	CSPI1_MOSI	N1
ATA_DIOW	H6	CSPI1_SCLK	M4
ATA_DMACK	E2	CSPI1_SPI_RDY	M1
$\overline{\text{ATA_RESET}}$	F3	CSPI1_SS0	M2
BATT_LINE	F6	CSPI1_SS1	N6
BCLK	W20	CSPI1_SS2	M3
BOOT_MODE0	F17	CSPI2_MISO	B4
BOOT_MODE1	C21	CSPI2_MOSI	D5

Because of an order from the United States International Trade Commission, BGA-packaged product lines and part numbers indicated here currently are not available from Freescale for import or sale in the United States prior to September 2010: i.MX31 Product Family

Downloaded from Arrow.com.

Table 69. 19 x 19 BGA Signal ID by Ball Grid Location (continued)

Signal ID	Ball Location
BOOT_MODE2	D20
BOOT_MODE3	F18
BOOT_MODE4	E20
CAPTURE	D18
CAS	AA20
CE_CONTROL	D12
CKIH	F23
CSPI3_SCLK	H7
CSPI3_SPI_RDY	F4
CTS1	A9
CTS2	C12
D0	U6
D1	W4
D10	V1
D11	U4
D12	U3
D13	R6
D14	U2
D15	U1
D2	W3
D3	V4
D3_CLS	P20
D3_REV	P21
D3_SPL	N17
D4	T7
D5	W2
D6	V3
D7	W1
D8	T6
D9	V2
DCD_DCE1	C10
DCD_DTE1	D11
$\overline{\text{DE}}$	D16
DQM0	AB19
DQM1	Y16
DQM2	AA18
DQM3	AB18
DRDY0	M17
DSR_DCE1	B10
DSR_DTE1	A11
DTR_DCE1	F10
DTR_DCE2	C11
DTR_DTE1	A10
DVFS0	E22
DVFS1	E23
EB0	W22

Signal ID	Ball Location
CSPI2_SCLK	B5
CSPI2_SPI_RDY	D6
CSPI2_SS0	C5
CSPI2_SS1	A4
CSPI2_SS2	F7
CSPI3_MISO	D2
CSPI3_MOSI	E4
GPIO1_3	G20
GPIO1_4	D21
GPIO1_5 (PWR RDY)	D19
GPIO1_6	G18
GPIO3_0	G23
GPIO3_1	K17
HSYNC	L23
I2C_CLK	J18
I2C_DAT	K18
IOIS16	J7
KEY_COL0	A15
KEY_COL1	B15
KEY_COL2	D14
KEY_COL3	C15
KEY_COL4	F13
KEY_COL5	A16
KEY_COL6	B16
KEY_COL7	A17
KEY_ROW0	A13
KEY_ROW1	B13
KEY_ROW2	C13
KEY_ROW3	A14
KEY_ROW4	F12
KEY_ROW5	D13
KEY_ROW6	B14
KEY_ROW7	C14
L2PG	See VPG1
LBA	V17
LCS0	M22
LCS1	N23
LD0	R23
LD1	R22
LD10	U22
LD11	R18
LD12	U20
LD13	V23
LD14	V22
LD15	V21
LD16	V20

Because of an order from the United States International Trade Commission, BGA-packaged product lines and part numbers indicated here currently are not available from Freescale for import or sale in the United States prior to September 2010: i.MX31 Product Family

Downloaded from Arrow.com.

Table 69. 19 x 19 BGA Signal ID by Ball Grid Location (continued)

Signal ID	Ball Location
EB1	W21
ECB	Y21
FPSHIFT	M23
GPIO1_0	C19
GPIO1_1	G17
GPIO1_2	B20
LD7	T20
LD8	R17
LD9	U23
M_GRANT	U18
M_REQUEST	T17
MA10	Y2
MCUPG	See VPG0
NFALE	T2
$\overline{\text{NFCE}}$	R4
NFCLE	T1
NFRB	R3
$\overline{\text{NFRE}}$	T4
$\overline{\text{NFWE}}$	T3
$\overline{\text{NFWP}}$	P6
OE	T18
PAR_RS	P22
PC_BVD1	G2
PC_BVD2	H4
$\overline{\text{PC_CD1}}$	J3
$\overline{\text{PC_CD2}}$	H1
PC_POE	J6
PC_PWRON	K6
PC_READY	H2
PC_RST	F1
$\overline{\text{PC_RW}}$	G3
PC_VS1	H3
PC_VS2	G1
$\overline{\text{PC_WAIT}}$	J4
$\overline{\text{POR}}$	F21
POWER_FAIL	F20
PWMO	F2
RAS	AA19
READ	N18
$\overline{\text{RESET_IN}}$	F22
RI_DCE1	D10
RI_DTE1	B11
RTCK	D15
RTS1	B9
RTS2	B12
RW	V18

Signal ID	Ball Location
LD17	W23
LD2	R21
LD3	R20
LD4	T23
LD5	T22
LD6	T21
SCK6	R2
SCLK0	B19
SD_D_CLK	M21
SD_D_I	M20
SD_D_IO	M18
SD0	AC18
SD1	AA17
SD1_CLK	K2
SD1_CMD	K3
SD1_DATA0	K4
SD1_DATA1	J1
SD1_DATA2	J2
SD1_DATA3	L6
SD10	AB14
SD11	AC14
SD12	AA13
SD13	AB13
SD14	AC13
SD15	AA12
SD16	AC12
SD17	AA11
SD18	AB11
SD19	AC11
SD2	AB17
SD20	AA10
SD21	AB10
SD22	AC10
SD23	AC9
SD24	AA9
SD25	AC8
SD26	AB8
SD27	AC7
SD28	AA8
SD29	AB7
SD3	AC17
SD30	AA7
SD31	AC6
SD4	AA16
SD5	AC16
SD6	AA15

Because of an order from the United States International Trade Commission, BGA-packaged product lines and part numbers indicated here currently are not available from Freescale for import or sale in the United States prior to September 2010: i.MX31 Product Family

Downloaded from Arrow.com.

Table 69. 19 x 19 BGA Signal ID by Ball Grid Location (continued)

Signal ID	Ball Location
RXD1	C9
RXD2	A12
SCK3	P1
SCK4	G6
SCK5	D4
SDCKE0	Y17
SDCKE1	V16
SDCLK	AC20
$\overline{\text{SDCLK}}$	AC19
SDQS0	AB16
SDQS1	AB12
SDQS2	AB9
SDQS3	AB6
SDWE	AB20
SER_RS	P23
SFS3	P2
SFS4	D3
SFS5	G7
SFS6	P4
SIMPD0	B18
SJC_MOD	C17
SRST0	C18
SRX0	A19
SRXD3	N3
SRXD4	C3
SRXD5	C4
SRXD6	R1
STX0	F16
STXD3	N4
STXD4	B3
STXD5	D1
STXD6	P3
SVEN0	D17
TCK	F14
TDI	A18
TDO	B17
TMS	C16

Signal ID	Ball Location
SD7	AB15
SD8	AC15
SD9	AA14
SDBA0	AA6
SDBA1	Y7
TRSTB	F15
TXD1	D9
TXD2	F11
USB_BYP	C8
USB_OC	B8
USB_PWR	A8
USBH2_CLK	L1
USBH2_DATA0	M6
USBH2_DATA1	K1
USBH2_DIR	L2
USBH2_NXT	L4
USBH2_STP	L3
USBOTG_CLK	D8
USBOTG_DATA0	G8
USBOTG_DATA1	C7
USBOTG_DATA2	A6
USBOTG_DATA3	F8
USBOTG_DATA4	D7
USBOTG_DATA5	B6
USBOTG_DATA6	A5
USBOTG_DATA7	C6
USBOTG_DIR	A7
USBOTG_NXT	B7
USBOTG_STP	F9
VPG0	G21
VPG1	G22
VSTBY	H18
VSYNC0	L22
VSYNC3	N20
WATCHDOG_RST	B21
WRITE	N22

Because of an order from the United States International Trade Commission, BGA-packaged product lines and part numbers indicated here currently are not available from Freescale for import or sale in the United States prior to September 2010: i.MX31 Product Family

Downloaded from Arrow.com.

5.3 Ball Maps

Table 70. Ball Map—14 x 14 0.5 mm Pitch

	1	2	3	4	5	6	7	8	9	10	11	12	13	14	15	16	17	18	19	20	21	22	23	24	25	26	
A	GND	GND	SFS5	CSPI2_MISO	CSPI2_SS2	USBOTG_DATA7	USBOTG_DATA3	USBOTG_NXT	USB_BYP	RXD1	DSR_DCE1	DSR_DTE1	RXD2	CE_CONTROL	KEY_ROW3	KEY_ROW7	KEY_COL3	KEY_COL7	TDO	SJC_MOD	SVEN0	CAPTURE	GPIO1_6	WATCHDOG_RST	GND	GND	A
B	GND	GND	STXD4	SRXD5	CSPI2_SS0	CSPI2_SPI_RDY	USBOTG_DATA5	USBOTG_DATA1	USBOTG_DIR	USB_PWR	CTS1	DCD_DCE1	DCD_DTE1	RTS2	KEY_ROW1	KEY_ROW5	KEY_COL1	KEY_COL5	TCK	TRSTB	SRX0	SCLK0	GPIO1_1	GPIO1_5	GND	GND	B
C	GND	GND	SRXD4	SCK4	STXD5	CSPI2_SS1	CSPI2_SCLK	USBOTG_DATA4	USBOTG_STP	USB_OC	DTR_DCE1	DTR_DTE1	TXD2	KEY_ROW2	KEY_COL0	KEY_COL4	RTCK	$\overline{DE}$	SRST0	GPIO1_2	BOOT_MODE1	BOOT_MODE3	CLKO	GND	GND	GND	C
D	GND	CSPI3_MOSI	SCK5																					BOOT_MODE2	GND	BOOT_MODE4	D
E	CSPI3_SCLK	ATA_DIOR	CSPI2_MOSI		NVCC5																	GND		GND	DVFS0	POWER_FAIL	E
F	ATA_DMACK	ATA_CS1	SFS4			NVCC5	BATT_LINE	USBOTG_DATA6	USBOTG_DATA0	TXD1	RI_DCE1	DTR_DCE2	KEY_ROW0	KEY_ROW6	KEY_COL6	TDI	STX0	GPIO1_0	GPIO1_4	BOOT_MODE0	GND			CKIH	GPIO1_3	VSTBY	F
G	PWMO	$\overline{PC_RW}$	CSPI3_MISO			CSPI3_SPI_RDY	NVCC5		USBOTG_DATA2	USBOTG_CLK	RTS1	RI_DTE1	CTS2	KEY_ROW4	KEY_COL2	TMS	SIMPD0	COMPARE	NVCC1		NVCC1			DVFS1	VPG0	CLKSS	G
H	PC_RST	PC_BVD1	$\overline{ATA_RESET}$			ATA_DIOW															CKIL			$\overline{POR}$	I2C_DAT	GPIO3_1	H
J	PC_VS1	PC_READY	IOIS16			ATA_CS0	PC_POE			QVCC1	QVCC1	NVCC8	NVCC8	QVCC	NVCC6	NVCC6	NVCC9			VPG1	$\overline{RESET_IN}$			I2C_CLK	CSI_VSYNC	CSI_PIXCLK	J
K	$\overline{PC_CD2}$	SD1_DATA3	PC_PWRON			PC_BVD2	PC_VS2		QVCC1						NVCC6			NVCC1		CSI_HSYNC	GPIO3_0			CSI_MCLK	CSI_D5	CSI_D7	K
L	SD1_DATA1	SD1_CMD	SD1_DATA2			$\overline{PC_WAIT}$	$\overline{PC_CD1}$		NVCC3		QVCC1	GND	QVCC	QVCC	QVCC	QVCC		NVCC4	NVCC4	CSI_D8	CSI_D4			CSI_D6	CSI_D9	CSI_D11	L
M	USBH2_DATA0	USBH2_STP	USBH2_DATA1			SD1_DATA0	SD1_CLK		NVCC3		GND	GND	GND	GND	GND	GND		QVCC		CSI_D14	CSI_D12			CSI_D10	CSI_D13	CSI_D15	M
N	USBH2_CLK	CSPI1_SCLK	CSPI1_SPI_RDY			USBH2_NXT	USBH2_DIR		QVCC4		NVCC3	GND	GND	GND	GND	GND		NVCC7		SD_D_I	FPSHIFT			VSYNC0	HSYNC	DRDY0	N
P	CSPI1_SS1	CSPI1_MOSI	CSPI1_SS0			CSPI1_SS2	CSPI1_MISO		NVCC10		NVCC10	GND	GND	GND	GND	GND		NVCC7		READ	LCS1			SD_D_CLK	SD_D_IO	LCS0	P
R	STXD3	SCK3	SRXD3			SFS3	SRXD6		QVCC4		NVCC10	GND	GND	GND	GND	GND		NVCC7		D3_CLS	PAR_RS			CONTRAST	WRITE	VSYNC3	R
T	STXD6	SCK6	SFS6			$\overline{NFCE}$	$\overline{NFWE}$		QVCC4		NVCC10	GND	GND	SGND	MGND	UGND		NVCC7		LD4	LD2			LD0	SER_RS	D3_REV	T
U	NFRB	$\overline{NFWP}$	NFCLE			D15	D11		QVCC4									QVCC		TTM_PAD	LD8			LD6	D3_SPL	LD1	U
V	NFALE	$\overline{NFRE}$	D13			D9	D5			QVCC	QVCC	QVCC	QVCC	SVCC	MVCC	UVCC	GND			LD17	LD13			LD10	LD3	LD5	V
W	D14	D12	D7			D3	NVCC22														EB0			LD15	LD7	LD9	W
Y	D10	D8	D1			IOQVDD	NVCC22	NVCC22	NVCC22	NVCC22	NVCC22	NVCC22	NVCC22	NVCC21	NVCC21	NVCC21	NVCC2	NVCC2	NVCC2	NVCC2	M_GRANT			EB1	LD11	LD12	Y
AA	D6	D4	A4			NVCC22	SD31	SD28	SD27	SD23	SD21	SD18	SD16	SD13	SD9	SD7	SD5	SD3	SD2	DQM2	SDCLK			FVCC	LD14	LD16	AA
AB	D2	D0	A6		A2																	RW		FGND	OE	BCLK	AB
AC	MA10	GND	A11																					FUSE_VDD	M_REQUEST	GND	AC
AD	GND	GND	A12	A13	A8	A0	SDBA0	SDQS3	SD29	SD25	SDQS2	SD17	SD15	SD12	SD8	SDQS0	SD4	SD0	DQM1	CAS	SDCKE0	CS3	ECB	GND	GND	GND	AD
AE	GND	GND	A7	A3	SDBA1	SD30	SD26	SD24	SD22	SD20	SD19	SDQS1	SD14	SD11	SD10	SD6	SD1	DQM3	DQM0	$\overline{SDCLK}$	CS2	LBA	CS0	GND	GND	GND	AE
AF	GND	GND	A9	A5	A1	A25	A24	A23	A22	A21	A20	A19	A18	A17	A16	A15	A14	A10	RAS	SDWE	SDCKE1	CS5	CS1	CS4	GND	GND	AF
	1	2	3	4	5	6	7	8	9	10	11	12	13	14	15	16	17	18	19	20	21	22	23	24	25	26	

Because of an order from the United States International Trade Commission, BGA-packaged product lines and part numbers indicated here currently are not available from Freescale for import or sale in the United States prior to September 2010: i.MX31 Product Family

Downloaded from Arrow.com.

Table 71. Ball Map—19 x 19 0.8 mm Pitch

	1	2	3	4	5	6	7	8	9	10	11	12	13	14	15	16	17	18	19	20	21	22	23	
A	GND	GND	GND	CSPI2_SS1	USBOTG_DATA6	USBOTG_DATA2	USBOTG_DIR	USB_PWR	CTS1	DTR_DTE1	DSR_DTE1	RXD2	KEY_ROW0	KEY_ROW3	KEY_COL0	KEY_COL5	KEY_COL7	TDI	SRX0	COMPARE	GND	GND	GND	A
B	GND	GND	STXD4	CSPI2_MISO	CSPI2_SCLK	USBOTG_DATA5	USBOTG_NXT	USB_OC	RTS1	DSR_DCE1	RI_DTE1	RTS2	KEY_ROW1	KEY_ROW6	KEY_COL1	KEY_COL6	TDO	SIMPD0	SCLK0	GPIO1_2	WATCH DOG_RST	GND	GND	B
C	GND	GND	SRXD4	SRXD5	CSPI2_SS0	USBOTG_DATA7	USBOTG_DATA1	USB_BYP	RXD1	DCD_DCE1	DTR_DCE2	CTS2	KEY_ROW2	KEY_ROW7	KEY_COL3	TMS	SJC_MOD	SRST0	GPIO1_0	CLKO	BOOT_MODE1	GND	GND	C
D	STXD5	CSPI3_MISO	SFS4	SCK5	CSPI2_MOSI	CSPI2_SPI_RDY	USBOTG_DATA4	USBOTG_CLK	TXD1	RI_DCE1	DCD_DTE1	CE_CONTROL	KEY_ROW5	KEY_COL2	RTCK	$\overline{\text{DE}}$	SVEN0	CAPTURE	GPIO1_5	BOOT_MODE2	GPIO1_4	GND	GND	D
E	ATA_CS0	ATA_DMACK	ATA_DIOR	CSPI3_MOSI																BOOT_MODE4	CKIL	DVFS0	DVFS1	E
F	PC_RST	PWMO	$\overline{\text{ATA_RESET}}$	CSPI3_SPI_RDY		BATT_LINE	CSPI2_SS2	USBOTG_DATA3	USBOTG_STP	DTR_DCE1	TXD2	KEY_ROW4	KEY_COL4	TCK	TRSTB	STX0	BOOT_MODE0	BOOT_MODE3		POWER_FAIL	$\overline{\text{POR}}$	$\overline{\text{RESET_IN}}$	CKIH	F
G	PC_VS2	PC_BVD1	$\overline{\text{PC_RW}}$	ATA_CS1		SCK4	SFS5	USBOTG_DATA0	NVCC5	NVCC5	NVCC6	NVCC6	NVCC6	NVCC9	NVCC1	NVCC1	GPIO1_1	GPIO1_6		GPIO1_3	VPG0	VPG1	GPIO3_0	G
H	$\overline{\text{PC_CD2}}$	PC_READY	PC_VS1	PC_BVD2		ATA_DIOW	CSPI3_SCLK	NVCC5	NVCC5	NVCC8	NVCC8	NVCC6	QVCC	NVCC4	NVCC7	NVCC1	CLKSS	VSTBY		CSI_MCLK	CSI_VSYNC	CSI_HSYNC	CSI_PIXCLK	H
J	SD1_DATA1	SD1_DATA2	$\overline{\text{PC_CD1}}$	$\overline{\text{PC_WAIT}}$		PC_POE	IOIS16	QVCC1	QVCC1	QVCC1	NVCC8	GND	GND	QVCC	NVCC4	NVCC7	NVCC1	I2C_CLK		CSI_D4	CSI_D5	CSI_D7	CSI_D8	J
K	USBH2_DATA1	SD1_CLK	SD1_CMD	SD1_DATA0		PC_PWRON	NVCC3	NVCC3	QVCC1	GND	GND	GND	GND	GND	NVCC4	NVCC7	GPIO3_1	I2C_DAT		CSI_D9	CSI_D10	CSI_D11	CSI_D12	K
L	USBH2_CLK	USBH2_DIR	USBH2_STP	USBH2_NXT		SD1_DATA3	NVCC3	NVCC3	QVCC4	GND	GND	GND	GND	GND	QVCC	NVCC7	CSI_D6	CSI_D14		CSI_D13	CSI_D15	VSYNC0	HSYNC	L
M	CSPI1_SPI_RDY	CSPI1_SS0	CSPI1_SS2	CSPI1_SCLK		USBH2_DATA0	QVCC4	QVCC4	GND	GND	GND	GND	GND	GND	QVCC	NVCC7	DRDY0	SD_D_IO		SD_D_I	SD_D_CLK	LCS0	FPSHIFT	M
N	CSPI1_MOSI	CSPI1_MISO	SRXD3	STXD3		CSPI1_SS1	NC[1]	QVCC4	QVCC	GND	GND	GND	GND	GND	QVCC	NVCC2	D3_SPL	READ		VSYNC3	CONTRAST	WRITE	LCS1	N
P	SCK3	SFS3	STXD6	SFS6		$\overline{\text{NFWP}}$	NC[1]	NVCC10	QVCC	GND	GND	GND	GND	GND	QVCC	NVCC2	UGND	UVCC		D3_CLS	D3_REV	PAR_RS	SER_RS	P
R	SRXD6	SCK6	NFRB	$\overline{\text{NFCE}}$		D13	NVCC10	NVCC10	NVCC10	QVCC	QVCC	GND	QVCC	QVCC	NVCC2	NVCC2	LD8	LD11		LD3	LD2	LD1	LD0	R
T	NFCLE	NFALE	$\overline{\text{NFWE}}$	$\overline{\text{NFRE}}$		D8	D4	IOQVDD	NVCC10	NVCC22	NVCC21	NVCC21	NVCC21	NVCC2	FUSE_VDD	FVCC	M_REQUEST	OE		LD7	LD6	LD5	LD4	T
U	D15	D14	D12	D11		D0	NVCC22	NVCC22	NVCC22	NVCC22	NVCC21	SVCC	SGND	MGND	MVCC	FGND	CS0	M_GRANT		LD12	NC	LD10	LD9	U
V	D10	D9	D6	D3		NVCC22	NVCC22	NVCC22	NVCC22	NVCC22	A22	A20	A18	A16	A10	SDCKE1	LBA	RW		LD16	LD15	LD14	LD13	V
W	D7	D5	D2	D1																BCLK	EB1	EB0	LD17	W
Y	GND	MA10	A13	A8	A4	A0	SDBA1	A25	A24	A23	A21	A19	A17	A15	A14	DQM1	SDCKE0	CS2	CS3	CS4	ECB	CS1	GND	Y
AA	GND	GND	A12	A7	A3	SDBA0	SD30	SD28	SD24	SD20	SD17	SD15	SD12	SD9	SD6	SD4	SD1	DQM2	RAS	CAS	CS5	GND	GND	AA
AB	GND	GND	A11	A6	A2	SDQS3	SD29	SD26	SDQS2	SD21	SD18	SDQS1	SD13	SD10	SD7	SDQS0	SD2	DQM3	DQM0	SDWE	GND	GND	GND	AB
AC	GND	GND	A9	A5	A1	SD31	SD27	SD25	SD23	SD22	SD19	SD16	SD14	SD11	SD8	SD5	SD3	SD0	$\overline{\text{SDCLK}}$	SDCLK	GND	GND	GND	AC
	1	2	3	4	5	6	7	8	9	10	11	12	13	14	15	16	17	18	19	20	21	22	23	

[1] These contacts are not used and must be floated by the user.

Because of an order from the United States International Trade Commission, BGA-packaged product lines and part numbers indicated here currently are not available from Freescale for import or sale in the United States prior to September 2010: i.MX31 Product Family

Downloaded from Arrow.com.

6 Product Differences

The locations that provide the differences between silicon Revision 2.0, 1.2, and previous versions are given in Table 72. The differences between the MCIMX31/MCIMX31L and the MCIMX31C/MCIMX31LC are outlined in Table 73.

Table 72. Silicon Differentiation by Location within the Data Sheet

Item	Location	Silicon 1.2 and Previous	Silicon 2.0
Ordering Information	Section 1.2, “Ordering Information	Table 1	Table 1
Feature Differences	Table 1.2.1, "Feature Differences Between Mask Sets," on page 3	N/A	Table 1.2.1
Operating Ranges	Table 4.1, "Chip-Level Conditions," on page 10	Table 8, "Operating Ranges," on page 13	Table 8, and Table 9, "Specific Operating Ranges for Silicon Revision 2.0," on page 14
Power-up Sequences	Section 4.2.1, “Powering Up	Figure 2, "Power-Up Sequence for Silicon Revisions 1.2 and Previous," on page 20	Figure 3, "Option 1 Power-Up Sequence (Silicon Revision 2.0)," on page 21
Power-down Sequences	Section 4.2.2, “Powering Down	—	—

Table 73. Product Differentiation

Item	Location	MCIMX31/MCIMX31L	MCIMX31C/MCIMX31LC
Device ordering information	Table 1, "Ordering Information," on page 3	See Table 1.	See Table 1.
Thermal simulation values	Table 6, "Thermal Resistance Data—14 × 14 mm Package," on page 11 and Table 7, "Thermal Resistance Data—19 × 19 mm Package," on page 11	See Table 6 and Table 7.	See Table 7.
Core overdrive operating voltages	Table 8, "Operating Ranges," on page 13	Capability to operate in overdrive voltages.	Not capable of overdrive operating voltages.
Fuse_VDD	Table 8, "Operating Ranges," on page 13 and Table 9, "Specific Operating Ranges for Silicon Revision 2.0," on page 14	Fusebox read Supply Voltage 1.65 min, 1.95 max.	In read mode, FUSE_VDD should be floated.
Ambient operating temperature range	Table 13, "Current Consumption for –40×C to 85×C, for Silicon Revision 2.0," on page 17, and Table 14, "Current Consumption for 0×C to 70×C, for Silicon Revision 2.0," on page 18	0°C min, 70°C max –40°C min, 85°C max	–40°C min, 85°C max
Current consumption values	Table 13, "Current Consumption for –40×C to 85×C, for Silicon Revision 2.0," on page 17	Typical value changes for State Retention, Doze, and Wait. See Table.	Typical value changes for State Retention, Doze, and Wait. See Table.
DPLL maximum output freq range	Table 31, "DPLL Specifications," on page 37	MPLL and SPLL = 532 MHz	MPLL and SPLL = 400 MHz

Because of an order from the United States International Trade Commission, BGA-packaged product lines and part numbers indicated here currently are not available from Freescale for import or sale in the United States prior to September 2010: i.MX31 Product Family

Downloaded from Arrow.com.

Table 73. Product Differentiation (continued)

Item	Location	MCIMX31/MCIMX31L	MCIMX31C/MCIMX31LC
GPIO maximum input current (100 kΩ PU)	Table 15, "GPIO DC Electrical Parameters," on page 22	V_I = 0, I_{IN} = 25 μA V_I = NVCC, I_{IN} = 0.1 μA	N/A N/A
Core operating speed	Table 8, "Operating Ranges," on page 13	532 MHz	400 MHz
Package	Table 70, "Ball Map—14 x 14 0.5 mm Pitch," on page 117 and Table 71, "Ball Map—19 x 19 0.8 mm Pitch," on page 118	MAPBGA Packages 457 14 x 14 mm, 0.5 mm Pitch 473 19 x 19 mm, 0.8 mm Pitch	MAPBGA Package 473 19 x 19 mm, 0.8 mm Pitch
Pin Assignment	Table 66, "14 x 14 BGA Signal ID by Ball Grid Location," on page 107 and Table 69, "19 x 19 BGA Signal ID by Ball Grid Location," on page 113	MAPBGA Packages 457 14 x 14 mm, 0.5 mm Pitch 473 19 x 19 mm, 0.8 mm Pitch	MAPBGA Package 473 19 x 19 mm, 0.8 mm Pitch

7 Product Documentation

This Data Sheet is labeled as a particular type: Product Preview, Advance Information, or Technical Data. Definitions of these types are available at: http://www.freescale.com.

MCIMX31 Product Brief (order number MCIMX31PB)

MCIMX31 Reference Manual (order number MCIMX31RM)

MCIMX31 Chip Errata (order number MCIMX31CE)

The Freescale manuals are available on the Freescale Semiconductors Web site at http://www.freescale.com/imx. These documents may be downloaded directly from the Freescale Web site, or printed versions may be ordered. ARM Ltd. documentation is available from http://www.arm.com.

8 Revision History

Table 74 summarizes revisions to this document since the release of Rev. 3.4.

Table 74. Revision History

Rev.	Location	Revision
4	Figure 87, Table 73	Updated.
4.1	Table 1, "Ordering Information," on page 3	Added note about JTAG compliance.
4.1	Section 1.2.1/3	Updated with new operating frequencies
4.1	Table 8, "Operating Ranges," on page 13	Added new operating frequencies

Because of an order from the United States International Trade Commission, BGA-packaged product lines and part numbers indicated here currently are not available from Freescale for import or sale in the United States prior to September 2010: i.MX31 Product Family

Downloaded from Arrow.com.

This page left intentionally blank

Because of an order from the United States International Trade Commission, BGA-packaged product lines and part numbers indicated here currently are not available from Freescale for import or sale in the United States prior to September 2010: i.MX31 Product Family

Downloaded from Arrow.com.

How to Reach Us:

Home Page:
www.freescale.com

E-mail:
support@freescale.com

USA/Europe or Locations Not Listed:
Freescale Semiconductor
Technical Information Center, CH370
1300 N. Alma School Road
Chandler, Arizona 85224
+1-800-521-6274 or +1-480-768-2130
support@freescale.com

Europe, Middle East, and Africa:
Freescale Halbleiter Deutschland GmbH
Technical Information Center
Schatzbogen 7
81829 Muenchen, Germany
+44 1296 380 456 (English)
+46 8 52200080 (English)
+49 89 92103 559 (German)
+33 1 69 35 48 48 (French)
support@freescale.com

Japan:
Freescale Semiconductor Japan Ltd.
Headquarters
ARCO Tower 15F
1-8-1, Shimo-Meguro, Meguro-ku,
Tokyo 153-0064, Japan
0120 191014 or +81 3 5437 9125
support.japan@freescale.com

Asia/Pacific:
Freescale Semiconductor Hong Kong Ltd.
Technical Information Center
2 Dai King Street
Tai Po Industrial Estate
Tai Po, N.T., Hong Kong
+800 2666 8080
support.asia@freescale.com

***For Literature Requests Only*:**
Freescale Semiconductor Literature Distribution Center
P.O. Box 5405
Denver, Colorado 80217
1-800-521-6274 or 303-675-2140
Fax: 303-675-2150
LDCForFreescaleSemiconductor@hibbertgroup.com

Information in this document is provided solely to enable system and software implementers to use Freescale Semiconductor products. There are no express or implied copyright licenses granted hereunder to design or fabricate any integrated circuits or integrated circuits based on the information in this document.

Freescale Semiconductor reserves the right to make changes without further notice to any products herein. Freescale Semiconductor makes no warranty, representation or guarantee regarding the suitability of its products for any particular purpose, nor does Freescale Semiconductor assume any liability arising out of the application or use of any product or circuit, and specifically disclaims any and all liability, including without limitation consequential or incidental damages. “Typical” parameters that may be provided in Freescale Semiconductor data sheets and/or specifications can and do vary in different applications and actual performance may vary over time. All operating parameters, including “Typicals”, must be validated for each customer application by customer’s technical experts. Freescale Semiconductor does not convey any license under its patent rights nor the rights of others. Freescale Semiconductor products are not designed, intended, or authorized for use as components in systems intended for surgical implant into the body, or other applications intended to support or sustain life, or for any other application in which the failure of the Freescale Semiconductor product could create a situation where personal injury or death may occur. Should Buyer purchase or use Freescale Semiconductor products for any such unintended or unauthorized application, Buyer shall indemnify and hold Freescale Semiconductor and its officers, employees, subsidiaries, affiliates, and distributors harmless against all claims, costs, damages, and expenses, and reasonable attorney fees arising out of, directly or indirectly, any claim of personal injury or death associated with such unintended or unauthorized use, even if such claim alleges that Freescale Semiconductor was negligent regarding the design or manufacture of the part.

Freescale™ and the Freescale logo are trademarks of Freescale Semiconductor, Inc. ARM, ARM Thumb, Jazelle, and the ARM Powered logo are registered trademarks of ARM Limited. ARM1136JF-S, ARM11, Embedded Trace Kit, Embedded Trace Macrocell, ETM, Embedded Trace Buffer, and ETB are trademarks of ARM Limited. All other product or service names are the property of their respective owners. Java and all other Java-based marks are trademarks or registered trademarks of Sun Microsystems, Inc. in the U.S. and other countries. France Telecom – TDF – Groupe des ecoles des telecommunications Turbo codes patents license.

© Freescale Semiconductor, Inc. 2005, 2006, 2007. All rights reserved.

Document Number: MCIMX31
Rev. 4.1
11/2008

Because of an order from the United States International Trade Commission, BGA-packaged product lines and part numbers indicated here currently are not available from Freescale for import or sale in the United States prior to September 2010: i.MX31 Product Family

Downloaded from Arrow.com.