Freescale Semiconductor
Data Sheet: Technical Data

Document Number: IMX25AEC
Rev. 10, 06/2013

MCIMX25

i.MX25 Applications Processor for Automotive Products

Silicon Version 1.2

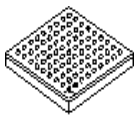

Package Information
Plastic package
Case 5284 17 x 17 mm, 0.8 mm Pitch

Ordering Information
See Table 1 on page 3 for ordering information.

1 Introduction

The i.MX25 family of processors are designed to meet the connectivity requirements of today's automobile infotainment systems. To meet these requirements, the i.MX25 processors provide high-end features, such as CAN, USB connectivity, and audio connectivity at a price point that is suitable for all vehicles.

At the core of the i.MX25 is Freescale's fast, proven, power-efficient implementation of the ARM® 926EJ-S™ core, with speeds of up to 400 MHz. The i.MX25 includes support for up to 133 MHz DDR2 memory, integrated 10/100 Ethernet MAC, and two on-chip USB PHYs. The automotive versions of the i.MX25 offer AEC-Q100 grade 3 qualification to meet stringent automotive quality requirements. The device is suitable for a wide range of applications, including the following:

- USB Connectivity for media storage/playback, personal media device interface, and firmware updates

1. Introduction 1
   1.1. Ordering Information 3
   1.2. Block Diagram 5
2. Features 6
   2.1. Special Signal Considerations 9
3. Electrical Characteristics 11
   3.1. i.MX25 Chip-Level Conditions 11
   3.2. Supply Power-Up/Power-Down Requirements and Restrictions 16
   3.3. Power Characteristics 18
   3.4. Thermal Characteristics 20
   3.5. I/O DC Parameters 20
   3.6. AC Electrical Characteristics 24
   3.7. Module Timing and Electrical Parameters 41
4. Package Information and Contact Assignment 124
   4.1. 400 MAPBGA—Case 17x17 mm, 0.8 mm Pitch . 124
   4.2. Ground, Power, Sense, and Reference Contact Assignments Case 17x17 mm, 0.8 mm Pitch . . . 125
   4.3. Signal Contact Assignments—17 x 17 mm, 0.8 mm Pitch 127
   4.4. i.MX25 17x17 Package Ball Map 135
5. Revision History 138

© 2009-2013 Freescale Semiconductor, Inc. All rights reserved.

- Bluetooth™ connectivity for hands free phone calling and streaming audio from wireless devices like phones or PND
- Control of the infotainment system through basic speech recognition or touch screen
- Smart toll and metering applications
- Secure data black box applications

Features of the i.MX25 processor include the following:

- Advanced power management—The heart of the device is a level of power management throughout the IC that enables the multimedia features and peripherals to achieve minimum system power consumption in active and various low-power modes. Power management techniques allow the designer to deliver a feature-rich product that requires levels of power far lower than typical industry expectations.
- Multimedia powerhouse—The multimedia performance of the i.MX25 processor is boosted by a 16 KB L1 instruction and data cache system and further enhanced by an LCD controller (with alpha blending), a CMOS image sensor interface, an A/D controller (integrated touchscreen controller), and a programmable Smart DMA (SDMA) controller.
- 128 Kbytes on-chip SRAM—The additional 128 Kbyte on-chip SRAM makes the device ideal for eliminating external RAM in applications with small footprint RTOS. The on-chip SRAM allows the designer to enable an ultra low power LCD refresh.
- Interface flexibility—The device interface supports connection to all common types of external memories: MobileDDR, DDR, DDR2, NOR Flash, PSRAM, SDRAM and SRAM, NAND Flash, and managed NAND.
- Increased security—Because the need for advanced security for tethered and untethered devices continues to increase, the i.MX25 processor delivers hardware-enabled security features that enable secure e-commerce, Digital Rights Management (DRM), information encryption, robust tamper detection, secure boot, and secure software downloads.
- On-chip PHY—The device includes an HS USB OTG PHY and FS USB HOST PHY.
- Fast Ethernet—For rapid external communication, a Fast Ethernet Controller (FEC) is included.
- i.MX25 only supports Little Endian mode.

1.1 Ordering Information

Table 1 provides ordering information for the i.MX25.

Table 1. Ordering Information

Description	Part Number	Silicon Version	Projected Temperature Range (°C)	Package	Ballmap
i.MX251	MCIMX251AVM4	1.1	–40 to +85	17 x 17 mm, 0.8 mm pitch, MAPBGA-400	Table 103
i.MX255	MCIMX255AVM4	1.1	–40 to +85	17 x 17 mm, 0.8 mm pitch, MAPBGA-400	Table 103
i.MX251	MCIMX251AJM4	1.1	–40 to +85	17 x 17 mm, 0.8 mm pitch, MAPBGA-400	Table 103
i.MX255	MCIMX255AJM4	1.1	–40 to +85	17 x 17 mm, 0.8 mm pitch, MAPBGA-400	Table 103
i.MX251	MCIMX251AJM4A	1.2	–40 to +85	17 x 17 mm, 0.8 mm pitch, MAPBGA-400	Table 103
i.MX255	MCIMX255AJM4A	1.2	–40 to +85	17 x 17 mm, 0.8 mm pitch, MAPBGA-400	Table 103

Table 2 shows the functional differences between the different parts in the i.MX25 family.

Table 2. i.MX25 Parts Functional Differences

Features	MCIMX251	MCIMX255
Core	ARM926EJ-S™	ARM926EJ-S™
CPU Speed	400 MHz	400MHz
L1 I/D Cache	16K I/D	16K I/D
On-chip SRAM	128 KB	128 KB
PATA/CE-ATA	—	Yes
LCD Controller	—	Yes
Touchscreen	—	Yes
CSI	—	Yes
FlexCAN (2)	Yes	Yes
ESAI	Yes	Yes
SIM (2)	Yes	Yes
Security	Yes	Yes
10/100 Ethernet	Yes	Yes
HS USB 2.0 OTG + PHY	Yes	Yes
HS USB 2.0 Host + PHY	Yes	Yes
12-bit ADC	Yes	Yes
SD/SDIO/MMC (2)	Yes	Yes

Table 2. i.MX25 Parts Functional Differences (continued)

Features	MCIMX251	MCIMX255
External Memory Controller	Yes	Yes
I^2C (3)	Yes	Yes
SSI/I2S (2)	Yes	Yes
CSPI (2)	Yes	Yes
UART (5)	Yes	Yes

1.2 Block Diagram

Figure 1 shows the simplified interface block diagram.

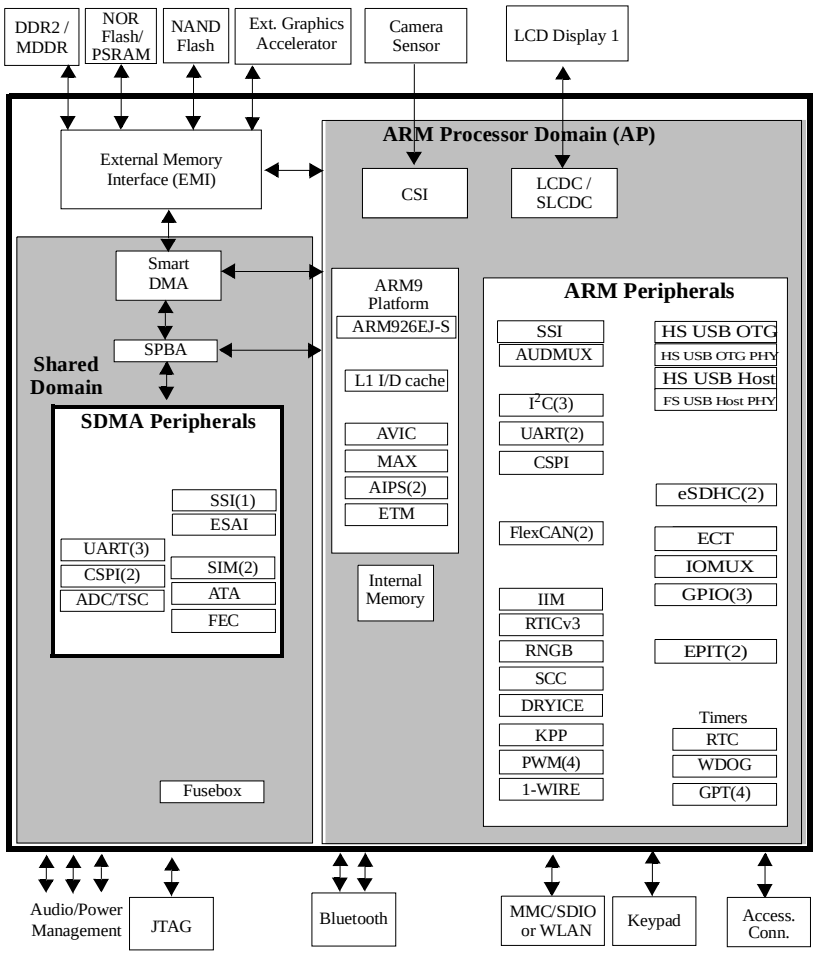

Figure 1. i.MX25 Simplified Interface Block Diagram

2 Features

Table 3 describes the digital and analog modules of the device.

Table 3. i.MX25 Digital and Analog Modules

Block Mnemonic	Block Name	Subsystem	Brief Description
1-WIRE	1-Wire Interface	Connectivity peripherals	1-Wire support provided for interfacing with an on-board EEPROM, and smart battery interfaces, for example: Dallas DS2502.
ARM9 or ARM926	ARM926 platform and memory	ARM	The ARM926 Platform consists of the ARM 926EJ-S core, the ETM real-time debug modules, a 5x5 Multi-Layer AHB crossbar switch, and a “primary AHB” complex. It contains the 16 Kbyte L1 instruction cache, 16 Kbyte L1 data cache, 32 Kbyte ROM and 128 Kbyte RAM.
ATA	ATA module	Connectivity peripherals	The ATA module is an AT attachment host interface. Its main use is to interface with IDE hard disc drives and ATAPI optical disc drives. It interfaces with the ATA device over a number of ATA signals.
AUDMUX	Digital audio mux	Multimedia peripherals	The AUDMUX is a programmable interconnect for voice, audio, and synchronous data routing between host serial interfaces (SSIs) and peripheral serial interfaces (audio codecs). The AUDMUX has two sets of interfaces: internal ports to on-chip peripherals, and external ports to off-chip audio devices. Data is routed by configuring the appropriate internal and external ports.
CCM	Clock control module	Clocks	This block generates all clocks for the iMX25 system. The CCM also manages the ARM926 Platform's low-power modes (wait, stop, and doze) by disabling peripheral clocks appropriately for power conservation.
CSPI(3)	Configurable serial peripheral interface	Connectivity peripherals	This module is a serial interface equipped with data FIFOs. Each master/slave-configurable SPI module is capable of interfacing to both serial port interface master and slave devices. The CSPI ready (SPI_RDY) and Slave Select (SS) control signals enable fast data communication with fewer software interrupts.
DRYICE	DryIce module	Security	DryIce provides volatile key storage for Point-of-Sale (POS) terminals, and a trusted time source for Digital Rights Management (DRM) schemes. Several tamper-detect circuits are also provided to support key erasure and time invalidation in the event of tampering. Alarms and/or interrupts can also assert if tampering is detected. DryIce also includes a Real Time clock (RTC) that can be used in secure and non-secure applications.
EMI	External memory interface	Connectivity peripherals	The External Memory Interface (EMI) module provides access to external memory for the ARM and other masters. It is composed of four main submodules: • M3IF provides arbitration between multiple masters requesting access to the external memory. • Enhanced SDRAM/LPDDR memory controller (ESDCTL) interfaces to DDR2 and SDR interfaces. • NAND Flash controller (NFC) provides an interface to NAND Flash memories. • Wireless External Interface Memory controller (WEIM) interfaces to NOR Flash and PSRAM.

Table 3. i.MX25 Digital and Analog Modules (continued)

Block Mnemonic	Block Name	Subsystem	Brief Description
EPIT(2)	Enhanced periodic interrupt timer	Timer peripherals	Each Enhanced Periodic Interrupt Timer (EPIT) is a 32-bit set-and-forget timer that starts counting after the EPIT is enabled by software. It is capable of providing precise interrupts at regular intervals with minimal processor intervention. It has a 12-bit prescaler to adjust the input clock frequency to the required time setting for the interrupts, and the counter value can be programmed on the fly.
ESAI	Enhanced serial audio interface	Connectivity peripherals	ESAI provides a full-duplex serial port for serial communication with a variety of serial devices, including industry-standard codecs, SPDIF transceivers, and other DSPs. The ESAI consists of independent transmitter and receiver sections, each section with its own clock generator.
eSDHC(2)	Enhanced multimedia card/ secure digital host controller	Connectivity peripherals	The features of the eSDHC module, when serving as host, include the following: • Conforms to the SD host controller standard specification version 2.0 • Compatible with the JEDEC MMC system specification version 4.2 • Compatible with the SD memory card specification version 2.0 • Compatible with the SDIO specification version 1.2 • Designed to work with SD memory, miniSD memory, SDIO, miniSDIO, SD combo, MMC and MMC RS cards • Configurable to work in one of the following modes: —SD/SDIO 1-bit, 4-bit —MMC 1-bit, 4-bit, 8-bit • Full-/high-speed mode • Host clock frequency variable between 32 kHz and 52 MHz • Up to 200-Mbps data transfer for SD/SDIO cards using four parallel data lines • Up to 416-Mbps data transfer for MMC cards using eight parallel data lines
FEC	Fast ethernet controller	Connectivity peripherals	The Ethernet Media Access Controller (MAC) is designed to support both 10- and 100-Mbps Ethernet networks compliant with IEEE 802.3® standard. An external transceiver interface and transceiver function are required to complete the interface to the media
FlexCAN(2)	Controller area network module	Connectivity peripherals	The Controller Area Network (CAN) protocol is primarily designed to be used as a vehicle serial data bus running at 1 MBps.
GPIO(4)	General purpose I/O modules	System control peripherals	Used for general purpose input/output to external ICs. Each GPIO module supports 32 bits of I/O.
GPT(4)	General purpose timers	Timer peripherals	Each GPT is a 32-bit free-running or set-and-forget mode timer with programmable prescaler and compare and capture register. A timer counter value can be captured using an external event and can be configured to trigger a capture event on either the leading or trailing edges of an input pulse. When the timer is configured to operate in set-and-forget mode, it is capable of providing precise interrupts at regular intervals with minimal processor intervention. The counter has output compare logic to provide the status and interrupt at comparison. This timer can be configured to run either on an external clock or on an internal clock.

Table 3. i.MX25 Digital and Analog Modules (continued)

Block Mnemonic	Block Name	Subsystem	Brief Description
I^2C(3)	I^2C module	Connectivity peripherals	Inter-IC Communication (I^2C) is an industry-standard, bidirectional serial bus that provides a simple, efficient method of data exchange, minimizing the interconnection between devices. I^2C is suitable for applications requiring occasional communications over a short distance between many devices. The interface operates up to 100 kbps with maximum bus loading and timing. The I^2C system is a true multiple-master bus, including arbitration and collision detection that prevents data corruption if multiple devices attempt to control the bus simultaneously. This feature supports complex applications with multiprocessor control and can be used for rapid testing and alignment of end products through external connections to an assembly-line computer.
IIM	IC Identification Module	Security	The IIM provides the primary user-visible mechanism for interfacing with on-chip fuse elements. Among the uses for the fuses are unique chip identifiers, mask revision numbers, cryptographic keys, and various control signals requiring a fixed value.
IOMUX	I/O multiplexer	Pins	Each I/O multiplexer provides a flexible, scalable multiplexing solution: • Up to eight output sources multiplexed per pin • Up to four destinations for each input pin • Unselected input paths are held at constant level for reduced power consumption
KPP	Keypad port	Connectivity peripherals	KPP can be used for either keypad matrix scanning or general purpose I/O.
LCDC	LCD Controller	Multimedia peripherals	LCDC provides display data for external gray-scale or color LCD panels. LCDC is capable of supporting black-and-white, gray-scale, passive-matrix color (passive color or CSTN), and active-matrix color (active color or TFT) LCD panels.
MAX	ARM platform multilayer AHB crossbar switch	ARM platform	MAX concurrently supports up to five simultaneous connections between master ports and slave ports. MAX allows for concurrent transactions to occur from any master port to any slave port.
PWM(4)	Pulse width modulation	Connectivity peripherals	The Pulse-Width Modulator (PWM) has a 16-bit counter and is optimized to generate sound from stored sample audio images. It can also generate tones. The PWM uses 16-bit resolution and a 4x16 data FIFO to generate sound.
SDMA	Smart DMA engine	System control	The SDMA provides DMA capabilities inside the processor. It is a shared module that implements 32 DMA channels.
SIM(2)	Subscriber identity module interface	Connectivity peripherals	The SIM is an asynchronous interface designed to facilitate communication with SIM cards or pre-paid phone cards. This module was designed based on the ISO7816 standard; however, the module does require an external companion controller to allow communication to certain smart cards or to pass certain certifications, such as EMV. The SIM supports only 11 and 12ETU cards and can communicate at the default rate, which is obtained at Fi/Di=372/1. An external companion controller is required to support cards aligned on 10.8 or 11.8ETU and to support other rates, such as those obtained at Fi/Di=372/2 and Fi/Di=372/4.
SJC	Secure JTAG interface	System control peripherals	The System JTAG Controller (SJC) provides debug and test control with maximum security.

Table 3. i.MX25 Digital and Analog Modules (continued)

Block Mnemonic	Block Name	Subsystem	Brief Description
SLCD	Smart LCD controller	Multimedia peripherals	The SLCDC module transfers data from the display memory buffer to the external display device.
SPBA	Shared peripheral bus arbiter	System control	The SPBA controls access to the shared peripherals. It supports shared peripheral ownership and access rights to an owned peripheral.
SSI(2)	I2S/SSI/AC97 interface	Connectivity peripherals	The SSI is a full-duplex serial port that allows the processor to communicate with a variety of serial protocols, including the Freescale Semiconductor SPI standard and the inter-IC sound bus standard (I2S). The SSIs interface to the AUDMUX for flexible audio routing.
TSC (and ADC)	Touchscreen controller (and A/D converter)	Multimedia peripherals	The touchscreen controller and associated Analog-to-Digital Converter (ADC) together provide a resistive touchscreen solution. The module implements simultaneous touchscreen control and auxiliary ADC operation for temperature, voltage, and other measurement functions.
UART(5)	UART interface	Connectivity peripherals	Each of the UART modules supports the following serial data transmit/receive protocols and configurations: • 7- or 8-bit data words, one or two stop bits, programmable parity (even, odd, or none) • Programmable baud rates up to 4 MHz. This is a higher maximum baud rate than the 1.875 MHz specified by the TIA/EIA-232-F standard and previous Freescale UART modules. 32-byte FIFO on Tx and 32 half-word FIFO on Rx supporting auto-baud • IrDA-1.0 support (up to SIR speed of 115200 bps) • Option to operate as 8-pins full UART, DCE, or DTE
USBOTG USBHOST	High-speed USB on-the-go	Connectivity peripherals	The USB module provides high-performance USB On-The-Go (OTG) and host functionality (up to 480 Mbps), compliant with the USB 2.0 specification, the OTG supplement, and the ULPI 1.0 Low Pin Count specification. The module has DMA capabilities for handling data transfer between internal buffers and system memory. An OTG HS PHY and HOST FS PHY are also integrated.

2.1 Special Signal Considerations

Special signal considerations are listed in Table 4. The package contact assignment is found in Section 4, "Package Information and Contact Assignment." Signal descriptions are provided in the reference manual.

Table 4. Signal Considerations

Signal	Description
BAT_VDD	DryIce backup power supply input.
CLK0	Clock-out pin; renders the internal clock visible to users for debugging. The clock source is controllable through CRM registers. This pin can also be configured (through muxing) to work as a normal GPIO.
CLK_SEL	Used to select the ARM clock source from MPLL out or from external EXT_ARMCLK. In normal operation, CLK_SEL should be connected to GND.
EXT_ARMCLK	Primarily for Freescale factory use. There is no internal on-chip pull-up/down on this pin, so it must be externally connected to GND or VDD. Aside from factory use, this pin can also be configured (through muxing) to work as a normal GPIO.

Table 4. Signal Considerations (continued)

Signal	Description
MESH_C, MESH_D	Wire-mesh tamper detect pins that can be routed at the PCB board to detect attempted tampering of a protected wire. When security measures are implemented, MESH_C should be pulled-up or connected to NVCC_DRYICE and triggers a tamper event when floating or when connected to MESH_D. MESH_D should be pulled-down or connected to GND and triggers an event when floating or connected to MESH_C. These pins can be left unconnected if the DryIce security features are not being used.
NVCC_DRYICE	This is the DryIce power supply output. The supply source is QVDD when the i.MX25 is in run mode. When i.MX25 is in reduced power mode, the DryIce supply source is the BATT_VDD supply. This pin can be used to power external DryIce components (external tamper detect, wire-mesh tamper detect). In order to guarantee the power-loss protection feature which guarantees that RTC and/or secure keys be maintained after power-off an external capacitor no less than 4 µF must be connected to this supply output pin. A 4.7 µF capacitor is recommended.
OSC_BYP	The 32 kHz oscillator bypass-control pin. If this signal is pulled down, then OSC32K_EXTAL and OSC32K_XTAL analog pins should be tied to the external 32.768 kHz crystal circuit. If on the other hand the signal is pulled up, then the external 32 kHz oscillator output clock must be connected to OSC32K_EXTAL analog pin, and OSC32K_XTAL can be no connect (NC).
OSC32K_EXTAL OSC32K_XTAL	These analog pins are connected to an external 32 kHz CLK circuit depending on the state of OSC_BYP pin (see the description of OSC_BYP under the preceding bullet). The 32 kHz reference CLK is required for normal operation.
POWER_FAIL	An interrupt from PMIC, which should be connected to a low-battery detection circuit. This signal is internally connected to an on-chip 100 kΩ pull-down device. If there is no low-battery detection, then users can tie this pin to GND through a pull-down resistor, or leave the signal as NC. This pin can also be configured to work as a normal GPIO.
REF	External ADC reference voltage. REF may be tied to GND if the user plans to only use the internally generated 2.5 V reference supply.
SJC_MOD	Must be externally connected to GND for normal operation. Termination to GND through an external pull-down resistor (such as 1 kΩ) is allowed, but the value should be much smaller than the on-chip 100 kΩ pull-up.
TAMPER_A, TAMPER _B	DryIce external tamper detect pins, active high. If TAMPER_A or TAMPER_B is connected to NVCC_DRYICE, then external tampering is detected. These pins can be left unconnected if the DryIce security features are not being used.
TEST_MODE	For Freescale factory use only. This signal is internally connected to an on-chip pull-down device. Users must either float this signal or tie it to GND.
UPLL_BYPCLK	Primarily for Freescale factory use. There is no internal on-chip pull-up/down on this pin, so it must be externally connected to GND or VDD. Aside from factory use, this pin can also be configured (through muxing) to work as a normal GPIO.
USBPHY1_RREF	Determines the reference current for the USB PHY1 bandgap reference. An external 10 kΩ 1% resistor to GND is required.
USBPHY2_DM USBPHY2_DP	The output impedance of these signals is expected at 10 Ω. It is recommended to also have on-board 33 Ω series resistors (close to the pins).

3 Electrical Characteristics

This section provides the device-level and module-level electrical characteristics for the i.MX25.

3.1 i.MX25 Chip-Level Conditions

This section provides the chip-level electrical characteristics for the IC.

3.1.1 DC Absolute Maximum Ratings

Table 5 provides the DC absolute maximum operating conditions.

CAUTION

- Stresses beyond those listed under Table 5 may cause permanent damage to the device.
- Exposure to absolute-maximum-rated conditions for extended periods may affect device reliability.
- Table 5 gives stress ratings only—functional operation of the device is not implied beyond the conditions indicated in Table 6.

Table 5. DC Absolute Maximum Ratings

Parameter	Symbol	Min.	Max.	Units
Supply voltage	QV_{DD}	–0.5	1.52	V
Supply voltage (level shift i/o)	$V_{DDIOmax}$	–0.5	3.6	V
ESD damage immunity:	V_{esd}			V
Human body model (HBM)		—	2500	
Charge device model (CDM)		—	400	
Machine model (MM)		—	200	
Input voltage range	V_{Imax}	–0.5	NV_{DD} + 0.3	V
Storage temperature range	$T_{storage}$	–40	105	^{o}C

3.1.2 DC Operating Conditions

Table 6 provides the DC recommended operating conditions.

Table 6. DC Operating Conditions

Parameter	Symbol	Min.	Typ.	Max.	Units
Core supply voltage (at 266 MHz)	QV_{DD}	1.15	1.34	1.52	V
Core supply voltage (at 400 MHz)	QV_{DD}	1.38	1.45	1.52	V
Coin battery[1] BAT_VDD	V_{DD_BAT}	1.15	—	1.55	V
I/O supply voltage, GPIO NFC,CSI,SDIO	NV_{DD_GPIO1}	1.75	—	3.6	V

Table 6. DC Operating Conditions (continued)

Parameter	Symbol	Min.	Typ.	Max.	Units
I/O supply voltage, GPIO CRM,LCDC,JTAG,MISC	NV_{DD_GPIO2}	3.0	3.3	3.6	—
I/O supply voltage DDR (Mobile DDR mode) EMI1, EMI2	NV_{DD_MDDR}	1.75	—	1.95	V
I/O supply voltage DDR (DDR2 mode) EMI1,EMI2	NV_{DD_DDR2}	1.75	—	1.9	V
I/O supply voltage DDR (SDRAM mode) EMI1,EMI2	NV_{DD_SDRAM}	1.75	—	3.6	V
Supply of USBPHY1 (HS) USBPHY1_VDDA_BIAS, USBPHY1_UPLL_VDD,USBPHY1_VDDA	$V_{DD_usbphy1}$	3.17	3.3	3.43	V
Supply of USBPHY2 (FS) USBPHY2_VDD	$V_{DD_usbphy2}$	3.0	3.3	3.6	V
Supply of OSC24M OSC24M_VDD	V_{DD_OSC24M}	3.0	3.3	3.6	V
Supply of PLL MPLL_VDD,UPLL_VDD	V_{DD_PLL}	1.4	—	1.65	V
Supply of touchscreen ADC NVCC_ADC	V_{DD_tsc}	3.0	3.3	3.6	V
External reference of touchscreen ADC Ref	Vref	2.5	V_{DD_tsc}	V_{DD_tsc}	V
Fusebox program supply voltage FUSE_VDD[2]	$FUSEV_{DD}$ (program mode)	3.3 ± 5%	—	3.6	V
Supply output[3] NVCC_DRYICE	$V_{DD_}$	1.0	—	1.55	V
Operating ambient temperature	T_A	–40	—	85	°C

1 V_{DD_BAT} must always be powered by battery in security application. In non-security case, V_{DD_BAT} can be connected to QV_{DD}.

2 The fusebox read supply is connected to supply of the full speed USBPHY2_VDD. FUSE_VDD is only used for programming. It is recommended that FUSE_VDD be connected to ground when not being used for programming. See Table 7 for current parameters.

3 NVCC_DRYICE is a supply output. An external capacitor no less than 4 µF must be connected to it. A 4.7 µF capacitor is recommended.

3.1.3 Fusebox Supply Current Parameters

Table 7 lists the fusebox supply current parameters.

Table 7. Fusebox Supply Current Parameters

Parameter	Symbol	Min.	Typ.	Max.	Units
eFuse program current[1] Current to program one eFuse bit The associated VDD_FUSE supply = 3.6 V	$I_{program}$	26	35	62	mA
eFuse read current[2] Current to read an 8-bit eFuse word	I_{read}	—	12.5	15	mA

[1] The current $I_{program}$ is during program time ($t_{program}$).

[2] The current I_{read} is present for approximately 50 ns of the read access to the 8-bit word.

3.1.4 Interface Frequency Limits

Table 8 provides information for interface frequency limits.

Table 8. Interface Frequency Limits

Parameter	Min.	Typ.	Max.	Units
JTAG: TCK Frequency of Operation	DC	5	10	MHz
OSC24M_XTAL Oscillator	—	24	—	MHz
OSC32K_XTAL Oscillator	—	32.768	—	kHz

Table 9 provides the recommended external crystal specifications.

Table 9. Recommended External Crystal Specifications

	24 MHz	32.768 kHz
Frequency Tolerance	<= ± 30 ppm	<= ± 30 ppm
ESR	< 80 Ω	50 K~60 K
Load Capacitor	8 pF–12 pF	6 pF–8 pF (12 pF–16 pF on each pin)
Shunt Capacitor	< 7 pF	1 pF
Drive Level	> 150 µW	> 1 µW

Table 10 provides the recommended external reference clock oscillator specifications (when reference is used from an external clock source).

Table 10. Recommended External Reference Clock Specifications

	24 MHz	32.768 kHz
V_{OH}	min = 0.7* VDD	min = 0.7* VDD
V_{OL}	max = 0.3* VDD	max = 0.3* VDD
Frequency Tolerance	= 30 ppm	= 30 ppm

Table 10. Recommended External Reference Clock Specifications (continued)

T_{RISE}	1% T_{CLOCK}	1% T_{CLOCK}
T_{FALL}	1% T_{CLOCK}	1% T_{CLOCK}
Duty Cycle	50%	50%

3.1.5 USB_PHY Current Consumption

Table 11 provides information for USB_PHY current consumption.

Table 11. USB PHY Current Consumption[1]

Parameter	Conditions		Typ. (@Typ. Temp)	Max. (@Max. Temp)	Unit
Analog supply USBPHY1_VDDA_BIAS, USBPHY1_UPLL_VDD, USBPHY1_VDDA (3.3 V)	Full speed	Rx	11.4	—	mA
		Tx	22,6	—	
	High speed	Rx	21.5	—	
		Tx	33.8	—	
	Suspend	—	0.6		µA
Analog supply USBPHY2_VDD (3.3 V)	Full Speed	Rx	120	—	µA
		Tx	25	—	mA
	Low Speed	Rx	252	—	µA
		Tx	5.5	—	mA
All supplies	Suspend		50	100	µA

[1] Values must be verified

3.1.6 Power Modes

Table 12 describes the core, clock, and module settings for the different power modes of the processor.

Table 12. i.MX25 Power Mode Settings

Core/Clock/Module	Power Mode				
	Doze	Wait	Stop/Sleep[1]	Run (266 MHz)	Run (400 MHz)
ARM core	Platform clock is off	In wait-for-interrupt mode	—	Active @ 266 MHz	Active @ 400 MHz
Well bias	On	Off	On	Off	Off
MCU PLL	On	On	Off	On	On
USB PLL	Off	Off	Off	On	On
OSC24M	On	On	Off	On	On
OSC32K	On	On	On	On	On
Other modules	Off	Off	Off	On	On

[1] Sleep mode differs from stop mode in that the core voltage is reduced to 1 V.

Table 13 shows typical current consumption for the various power supplies under the various power modes.

Table 13. i.MX25 Power Mode Current Consumption

Power Group	Power Supplies	Voltage Setting	Current Consumption for Power Modes[1]			
			Doze	Wait	Stop	Sleep
NVCC_EMI	NVCC_EMI1 NVCC_EMI2	3.0 V	5 µA	3.15 µA	3.51 µA	3.61 µA
NVCC_CRM	NVCC_CRM	3.0 V	1.15 µA	4.31 µA	0.267 µA	0.32 µA
NVCC_ OTHER	NVCC_SDIO NVCC_CSI NVCC_NFC NVCC_JTAG NVCC_LCDC NVCC_MISC	3.0 V	31.2 µA	29.5 µA	31.7 µA	32.1 µA
NVCC_ADC	NVCC_ADC	3.0 V	163 µA	3.25 µA	1.14 µA	0.871 µA
OSC24M	OSC24M_ VDD	3.0 V	906 µA	903 µA	10.2 µA mA	10.5 µA
PLL_VDD	MPLL_VDD UPLL_VDD	1.4 V	6.83 mA	6.83 mA	38.9 µA	39.1 µA
QVDD	QVDD	1.15 V	8.79 mA	11.28 mA	842 µA	665 µA
USBPHY1_ VDDA	USBPHY1_ VDDA	3.17 V	240 µA	240 µA	241 µA	242 µA
USBPHY1_ VDDA_VBIAS	USBPHY1_ VDDA_VBIAS	3.17 V	0.6 µA	1.46 µA	0.328 µA	0.231 µA
USBPHY1_ UPLL_VDD	USBPHY1_ UPLL_VDD	3.17 V	201 µA	201 µA	191 µA	191 µA
USBPHY2	USBPHY2_ VDD	3.0 V	158 µA	0158 µA	164 µA	164 µA

[1] Values are typical, under typical use conditions.

In the reduced power mode, shown in Table 14, the i.MX25 is powered down, while the RTC clock and the secure keys (in secure-use case), remain operational. BAT_VDD is tied to a battery while all other supplies are turned off.

NOTE

In this low-power mode, i.MX25 cannot be woken up with an interrupt; it must be powered back up before it can detect any events.

Table 14. iMX25 Reduced Power Mode Current Consumption

Power Group	Power Supply	Voltage Setting	Typical Current Consumption
BAT_VDD	BAT_VDD	1.15 V	9.95 µA
		1.55 V	12.6 µA

3.2 Supply Power-Up/Power-Down Requirements and Restrictions

Any i.MX25 board design must comply with the power-up and power-down sequence guidelines given in this section to ensure reliable operation of the device. Recommended power-up and power-down sequences are given in the following subsections.

CAUTION

Deviations from the guidelines in this section may result in the following situations:

- Excessive current during power-up phase
- Prevention of the device from booting
- Irreversible damage to the i.MX25 (worst-case scenario)

NOTE

For security applications, the coin battery must be connected during both power-up and power-down sequences to ensure that security keys are not unintentionally erased.

3.2.1 Power-Up Sequence

For those users that are not using DryIce/SRTC, the following power-up sequence is recommended:

1. Assert power on reset (POR).
2. Turn on QVDD digital logic domain supplies.
3. Turn on NVCCx digital I/O power supplies after QVDD is stable.
4. Turn on all other analog power supplies, including USBPHY1_VDDA_BIAS, USBPHY1_UPLL_VDD, USBPHY1_VDDA, USBPHY2_VDD, OSC24M_VDD, MPPLL_VDD, UPLL_VDD, NVCC_ADC, and FUSEVDD (FUSEVDD is tied to GND if fuses are not programmed), after all NVCCx digital I/O supplies are stable.
5. Negate the POR signal.

NOTE

- The user is advised to connect FUSEVDD to GND except when fuses are programmed, to prevent unintentional blowing of fuses.
- Other power-up sequences may be possible; however, the above sequence has been verified and is recommended.
- There is a 1 ms minimum time between supplies coming up, and a 1 ms minimum time between POR_B assert and de-assert.
- The dV/dT should be no faster than 0.25 V/µs for all power supplies, to avoid triggering ESD circuit.

Figure 2 shows the power-up sequence diagram. After POR_B is asserted, Core VDD and NVDDx can be powered up. After Core VDD and NVDDx are stable, the analog supplies can be powered up.

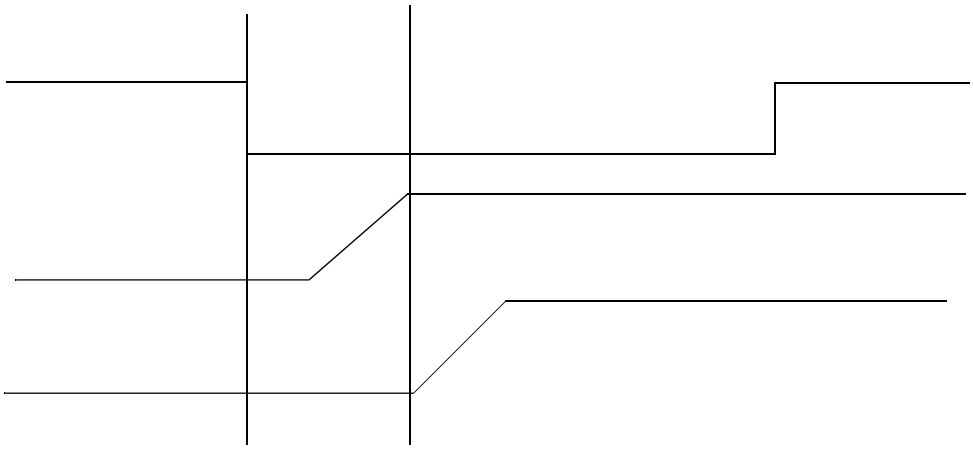

Figure 2. Power-Up Sequence Diagram

3.2.2 Power-Down Sequence

There are no special requirements for the power-down sequence. All power supplies can be shut down at the same time.

3.2.3 SRTC DryIce Power-Up/Down Sequence

In order to guarantee DryIce power-loss protection, including retention of SRTC time data during power down, users must do the following:

- Place a proper capacitor on the NVCC_DRYICE output pin, and
- Implement the below power-up/down sequence

1. Assert power on reset (POR).
2. Turn on NVCC_CRM.
3. Turn on QVDD digital logic domain supplies for not less than 1 ms and not more than 32 ms, after NVCC_CRM reaches 90% of 3.3 V.

NOTE

This is to guarantee that POR is stable already at NVCC_CRM/QVDD power domain interface before QVDD is turned on, and POR instantly propagates to QVDD domain after QVDD is turned on.

4. Turn on other NVCCx digital I/O power supplies for not less than 1 ms and not more than 32 ms, after QVDD reaches 90% of 1.2 V.
5. Turn on all other analog power supplies, including USBPHY1_VDDA_BIAS, USBPHY1_UPLL_VDD, USBPHY1_VDDA, USBPHY2_VDD, NVCC_ADC, OSC24M_VDD, MPPLL_VDD, UPLL_VDD, and FUSEVDD (FUSEVDD is tied to GND if fuses are not programmed) for not less than 1 ms and not more than 32 ms, after NVCCx reaches 90% of 3.3 V.

NOTE

This is to guarantee that analog peripherals can get properly initialized (reset) values from QVDD domain and NVCCx domain.

6. Negate the POR signal for at least 90 µs after all previous steps.

NOTE

- This is to guarantee that both POR logic and clocks are stable inside the i.MX25 chip, before POR is removed.
- The dV/dT should be no faster than 0.25 V/us for all power supplies, to avoid triggering ESD circuit.

In addition, the following power-down sequence is recommended:

1. Turn off power for analog parts, including USBPHY1_VDDA_BIAS, USBPHY1_UPLL_VDD, USBPHY1_VDDA, USBPHY2_VDD, NVCC_ADC, and FUSEVDD (FUSEVDD is tied to GND if fuses are not programmed).
2. Turn off QVDD.
3. Turn off NVCCx, PLL, OSC, and other powers.

NOTE

The power-down steps can be executed simultaneously, or very shortly one after another.

3.3 Power Characteristics

Table 15 shows values representing maximum current numbers for the i.MX25 under worst case voltage and temperature conditions. These values are derived from the i.MX25 with core clock speed up to 400 MHz. Additionally, no power saving techniques such as clock gating were implemented when measuring these values. Common supplies are bundled according to the i.MX25 power-up sequence requirements. Peak numbers are provided for system designers so that the i.MX25 power supply requirements are satisfied during startup and transient conditions. Freescale recommends that system

current measurements are taken with customer-specific use-cases to reflect the normal operating conditions in the end system.

Table 15. Power Consumption

Power Supply	Voltage (V)	Max Current (mA)
QVDD	1.52	360
NVCC_EMI1, NVCC_EMI2	1.9	30
NVCC_CRM, NVCC_SDIO, NVCC_CSI, NVCC_NFC, NVCC_JTAG, NVCC_LCDC, NVCC_MISC	3.6	110
MPLL_VDD, UPLL_VDD	1.65	20
USBPHY1_VDDA_BIAS, USBPHY1_UPLL_VDD, USBPHY1_VDDA, USBPHY2_VDD, OSC24M_VDD, NVCC_ADC	3.3	40
FUSE_VDD[1]	3.6	62
BATT_VDD	1.55	0.030

[1] The FUSE_VDD rail is connected to ground. it only needs a voltage if the system fuse burning is needed.

The method for obtaining the maximum current is as follows:

1. Measure the worst case power consumption on individual rails using directed test on i.MX25.
2. Correlate the worst case power consumption power measurements with the worst case power consumption simulations.
3. Combine common voltage rails based on the power supply sequencing requirements (add the worst case power consumption on each rail within some test cases from several test cases run, to maximize different rails in the power group).
4. Guard the worst case numbers for temperature and process variation.
5. The sum of individual rails is greater than the real world power consumption, since a real system does not typically maximize the power consumption on all peripherals simultaneously.
6. BATT_VDD current is measured when the system is in reduced power mode maintaining the RTC. When the system is in run mode, QVDD is used to supply the DryIce, so this current becomes negligible. See Table 12, for more details on the power modes.

NOTE

The values mentioned above should not be taken as a typical max run data for specific use cases. These values are Absolute MAX data. Freescale recommends that the system current measurements are taken with customer-specific use-cases to reflect normal operating conditions in the end system.

3.4 Thermal Characteristics

The thermal resistance characteristics for the device are given in Table 16. These values are measured under the following conditions:

- Two-layer substrate
- Substrate solder mask thickness: 0.025 mm
- Substrate metal thicknesses: 0.016 mm
- Substrate core thickness: 0.200 mm
- Core through I.D: 0.118 mm, Core through plating 0.016 mm.
- Flag: Trace style with ground balls under the die connected to the flag
- Die Attach: 0.033 mm non-conductive die attach, k = 0.3 W/m K
- Mold compound: Generic mold compound; k = 0.9 W/m K

Table 16. Thermal Resistance Data

Rating	Condition	Symbol	Value	Unit
Junction to ambient[1] natural convection	Single layer board (1s)	R_{eJA}	55	°C/W
Junction to ambient[1] natural convection	Four layer board (2s2p)	R_{eJA}	33	°C/W
Junction to ambient[1] (@200 ft/min)	Single layer board (1s)	R_{eJMA}	46	°C/W
Junction to ambient[1] (@200 ft/min)	Four layer board (2s2p)	R_{eJMA}	29	°C/W
Junction to boards[2]	—	R_{eJB}	22	°C/W
Junction to case (top)[3]	—	R_{eJCtop}	13	°C/W
Junction to package top[4]	Natural convection	Ψ_{JT}	2	°C/W

1 Junction-to-ambient thermal resistance determined per JEDC JESD51-3 and JESD51-6. Thermal test board meets JEDEC specification for this package.

2 Junction-to-board thermal resistance determined per JEDC JESD51-8. Thermal test board meets JEDEC specification for this package.

3 Junction-to-case at the top of the package determined using MIL-STD 883 Method 1012.1. The cold plate temperature is used for the case temperature. Reported value includes the thermal resistance of the interface layer.

4 Thermal characterization parameter indicating the temperature difference between the package top and the junction temperature per JEDEC JESD51-2. When Greek letters are not available, this thermal characterization parameter is written as Psi-JT.

3.5 I/O DC Parameters

This section includes the DC parameters of the following I/O types:

- DDR I/O: Mobile DDR (mDDR), double data rate (DDR2), or synchronous dynamic random access memory (SDRAM)
- General purpose I/O (GPIO)

NOTE

The term ‘OVDD’ in this section refers to the associated supply rail of an input or output. The association is shown in the “Signal Multiplexing” chapter of the reference manual.

3.5.1 DDR I/O DC Parameters

The DDR pad type is configured by the IOMUXC_SW_PAD_CTL_GRP_DDRTYPE register (see the External Signals and Pin Multiplexing chapter of the *i.MX25 Reference Manual* for details).

3.5.1.1 DDR_TYPE = 00 Standard Setting DDR I/O DC Parameters

Table 17 shows the I/O parameters for mobile DDR. These settings are suitable for mDDR and DDR2 1.8V (± 5%) applications.

Table 17. Mobile DDR I/O DC Electrical Characteristics

DC Electrical Characteristics	Symbol	Test Conditions	Min.	Typ.	Max.	Units
High-level output voltage	Voh	I_{OH} = –1mA I_{OH} = Specified Drive	OVDD – 0.08 0.8 × OVDD	—	—	V
Low-level output voltage	Vol	I_{OL} = 1mA I_{OL} = Specified Drive	—	—	0.08 0.2 × OVDD	V
High-level output current	I Ioh	Voh = 0.8 × OVDDV Standard Drive High Drive Max. Drive	 –3.6 –7.2 –10.8	—	—	 mA
Low-level output current	I Iol	Vol = 0.2 × OVDDV Standard Drive High Drive Max. Drive	 3.6 7.2 10.8	—	—	 mA
High-level DC CMOS input voltage	VIH	—	0.7 × OVDD	OVDD	OVDD+0.3	V
Low-level DC CMOS input voltage	VIL	—	–0.3	0	0.3 × OVDD	V
Differential receiver VTH+	VTH+	—		—	100	mV
Differential receiver VTH-	VTH-		–100	—	—	mV
Input current (no pull-up/down)	IIN	VI = 0 VI = OVDD	—	—	110 60	nA
High-impedance I/O supply current	Icc-ovdd	VI = OVDD or 0	—	—	990	nA
High-impedance core supply current	Icc-vddi	VI = VDD or 0	—	—	1220	nA

3.5.1.2 DDR_TYPE = 01 SDRAM I/O DC Parameters

Table 18 shows the DC I/O parameters for SDRAM.

Table 18. SDRAM DC Electrical Characteristics

DC Electrical Characteristics	Symbol	Test Conditions	Min.	Typ.	Max.	Units
High-level output voltage	Voh	Ioh = Specified Drive (Ioh = –4, –8, –12, –16mA)	2.4	—	—	V
Low-level output voltage	Vol	Ioh = Specified Drive (Ioh = 4, 8, 12, 16mA)	—	—	0.4	V
High-level output current	I Ioh	Standard Drive High Drive Max. Drive	–4.0 –8.0 –12.0	—	—	mA
Low-level output current	I Iol	Standard Drive High Drive Max. Drive	4.0 8.0 12.0	—	—	mA
High-level DC input voltage	VIH	—	2.0	—	3.6	V
Low-level DC input voltage	VIL	—	–0.3 V	—	0.8	V
Input current (no pull-up/down)	IIN	VI = 0 VI = OVDD	—	—	150 80	nA
High-impedance I/O supply current	Icc-ovdd	VI = OVDD or 0	—	—	1180	nA
High-impedance core supply current	Icc-vddi	VI = VDD or 0	—	—	1220	nA

3.5.1.3 DDR_TYPE = 10 Max Setting DDR I/O DC Parameters

Table 19 shows the I/O parameters for DDR2 (SSTL_18).

Table 19. DDR2 (SSTL_18) I/O DC Electrical Characteristics

DC Electrical Characteristics	Symbol	Test Conditions	Min.	Typ.	Max.	Units
High-level output voltage	Voh	—	OVDD – 0.28	—	—	V
Low-level output voltage	Vol	—	—	—	0.28	V
Output min. source current[1]	IIoh	—	–13.4	—	—	mA
Output min. sink current[2]	IIol	—	13.4	—	—	mA
DC input logic high	VIH(dc)	—	OVDD/2 + 0.125	—	OVDD + 0.3	V
DC input logic low	VIL(dc)	—	–0.3 V	—	OVDD/2 – 0.125	V
DC input signal voltage[3] (for differential signal)	Vin(dc)	—	–0.3	—	OVDD + 0.3	V
DC differential input voltage[4]	Vid(dc)	—	0.25	—	OVDD+0.6	V

Table 19. DDR2 (SSTL_18) I/O DC Electrical Characteristics (continued)

DC Electrical Characteristics	Symbol	Test Conditions	Min.	Typ.	Max.	Units
Termination voltage[5]	Vtt	—	OVDD/2 – 0.04	OVDD/2	OVDD/2 + 0.04	
Input current[6](no pull-up/down)	IIN	VI = 0 VI = OVDD	—	—	110 60	nA
High-impedance I/O supply current[6]	Icc-ovdd	VI = OVDD or 0	—	—	980	nA
High-impedance core supply current[6]	Icc-vddi	VI = VDD or 0	—	—	1210	nA

1 OVDD = 1.7 V; V_{out} = 1.42 V. (V_{out}-OVDD)/IOH must be less than 21 W for values of V_{out} between OVDD and OVDD-0.28 V.

2 OVDD = 1.7 V; V_{out} = 280 mV. V_{out}/IOL must be less than 21 W for values of V_{out} between 0 V and 280 mV. Simulation circuit for parameters V_{oh} and V_{ol} for I/O cells is below.

3 Vin(dc) specifies the allowable DC excursion of each differential input.

4 Vid(dc) specifies the input differential voltage required for switching. The minimum value is equal to Vih(dc) - Vil(dc).

5 Vtt is expected to track OVDD/2.

6 Minimum condition: BCS model, 1.95 V, and –40 °C. Typical condition: typical model, 1.8 V, and 25 °C. Maximum condition: wcs model, 1.65 V, and 105 °C.

3.5.2 GPIO I/O DC Parameters

Table 20 shows the I/O parameters for GPIO.

Table 20. GPIO DC Electrical Characteristics

DC Electrical Characteristics	Symbol	Test Conditions	Min.	Typ.	Max.	Units
High-level output voltage[1]	Voh	Ioh=–1mA Ioh = Specified Drive	OVDD – 0.15 0.8 × OVDD	—	—	V
Low-level output voltage[1]	Vol	Iol=1mA Iol=Specified Drive	—	—	0.15 0.2 × OVDD	V
High-level output current for slow mode	I Ioh	Voh=0.8 × OVDD Standard Drive High Drive Max. Drive	 –2.0 –4.0 –8.0	—	—	mA
High-level output current for fast mode	I Ioh	Voh=0.8 × OVDD Standard Drive High Drive Max. Drive	 –4.0 –6.0 –8.0	—	—	mA
Low-level output current for slow mode	I Iol	Voh=0.2 × OVDD Standard Drive High Drive Max. Drive	 2.0 4.0 8.0	—	—	mA
Low-level output current for fast mode	I Iol	Voh=0.2 × OVDD Standard Drive High Drive Max. Drive	 4.0 6.0 8.0	—	—	mA
High-level DC input voltage	VIH	—	0.7 × OVDD	—	OVDD	V
Low-level DC input voltage	VIL	—	–0.3 V	—	0.3 × OVDD	V

Table 20. GPIO DC Electrical Characteristics (continued)

DC Electrical Characteristics	Symbol	Test Conditions	Min.	Typ.	Max.	Units
Input hysteresis	VHYS	OVDD = 3.3 V OVDD = 1.8V	370 290	—	420 320	mV
Schmitt trigger VT+[1]	VT+	—	0.5 × OVDD	—	—	V
Schmitt trigger VT–[1]	VT–	—	—	—	0.5 × OVDD	V
Pull-up resistor (22 kΩ PU)	Rpu	Vi=0	18.5	22	25.6	kΩ
Pull-up resistor (47 kΩ PU)	Rpu	Vi=0	41	47	55	kΩ
Pull-up resistor (100 kΩ PU)	Rpu	Vi=0	85	100	120	kΩ
Pull-down resistor (100 kΩ PD)	Rpd	VI = OVDD	85	100	120	kΩ
Input current (no pull-up/down)	IIN	VI = 0, OVDD = 3.3 V VI = OVDD = 3.3 V VI = 0, OVDD = 1.8 V VI = OVDD = 1.8 V	—	—	100 60 77 50	nA
Input current (22 kΩ PU)	IIN	VI = 0, OVDD = 3.3 V VI = OVDD = 3.3 V VI = 0, OVDD = 1.8 V VI = OVDD = 1.8 V	117 0.0001 64 0.0001	—	184 0.0001 104 0.0001	µA
Input current (47 kΩ PU)	IIN	VI = 0, OVDD = 3.3 V VI = OVDD = 3.3 V VI = 0, OVDD = 1.8 V VI = OVDD = 1.8 V	54 0.0001 30 0.0001	—	88 0.0001 49 0.0001	µA
Input current (100 kΩ PU)	IIN	VI = 0, OVDD = 3.3 V VI = OVDD = 3.3 V VI = 0, OVDD = 1.8 V VI = OVDD = 1.8 V	25 0.0001 14 0.0001	—	42 0.0001 23 0.0001	µA
Input current (100 kΩ PD)	IIN	VI = 0, OVDD = 3.3 V VI = OVDD = 3.3 V VI = 0, OVDD = 1.8 V VI = OVDD = 1.8 V	25 0.0001 14 0.0001	—	42 0.001 23 0.0001	µA
High-impedance I/O supply current	Icc–ovdd	VI = 0, OVDD = 3.3 V VI = OVDD = 3.3 V VI = 0, OVDD = 1.8 V VI = OVDD = 1.8 V	—	—	688 688 560 560	nA
High-impedance core supply current	Icc–vddi	VI = 0, OVDD = 3.3 V VI = OVDD = 3.3 V VI = 0, OVDD = 1.8 V VI = OVDD = 1.8 V	—	—	490 490 410 410	nA

[1] Hysteresis of 250 mV is guaranteed over all operating conditions when hysteresis is enabled.

3.6 AC Electrical Characteristics

This section provides the AC parameters for slow and fast I/O.

Figure 3 shows the load circuit for output. Figure 4 through Figure 6 show the output transition time and propagation waveforms.

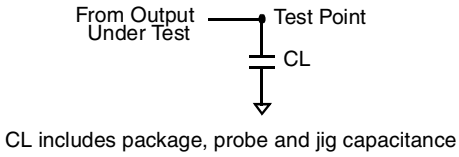

Figure 3. Load Circuit for Output

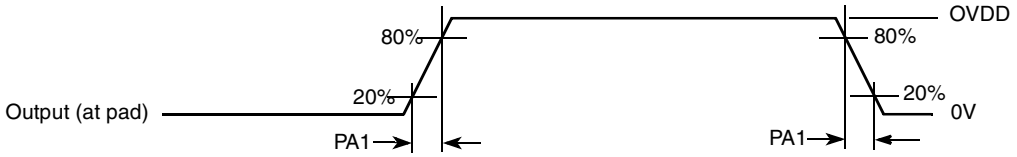

Figure 4. Output Pad Transition Time Waveform

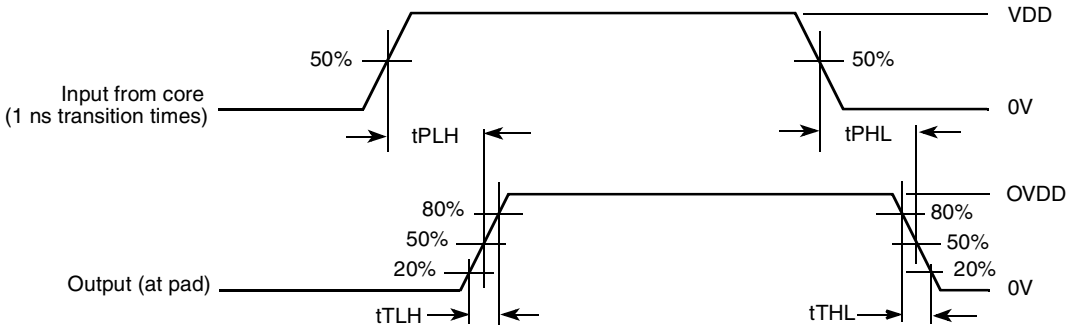

Figure 5. Output Pad Propagation and Transition Time Waveform

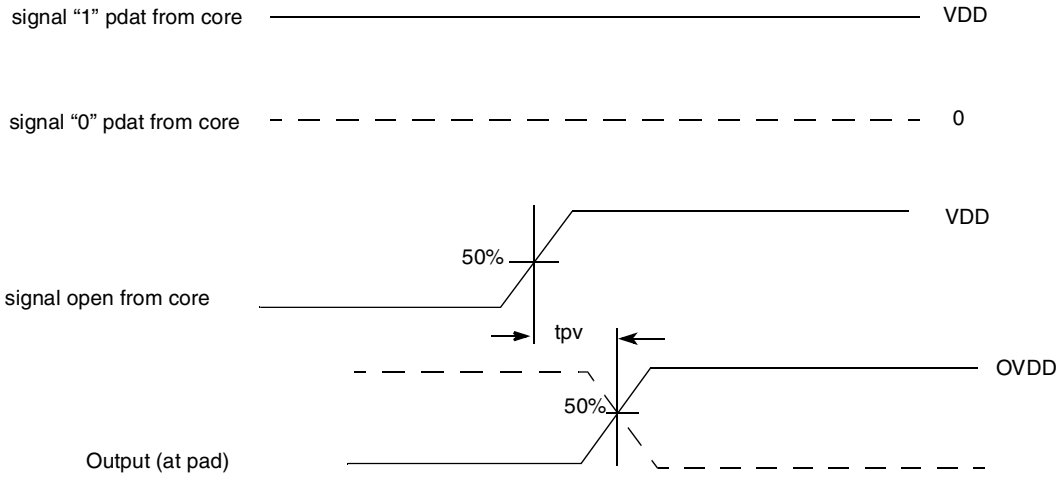

Figure 6. Output Enable to Output Valid

3.6.1 Slow I/O AC Parameters

Table 21 shows the slow I/O AC parameters.

Table 21. Slow I/O AC Parameters

Parameter	Symbol	Test Voltage	Test Capacitance	Min. Rise/Fall	Typ. Rise/Fall	Max. Rise/Fall	Units
Duty cycle	Fduty	—	—	40	—	60	%
Output pad transition times[1] (max. drive)	tpr	3.0–3.6 V 3.0–3.6 V 1.65–1.95 V 1.65–1.95 V	25 pF 50 pF 25 pF 50 pF	0.95/0.84 1.58/1.37 2.70/2.50 3.40/3.20	1.36/1.11 2.19/1.77 1.80/1.40 2.80/2.14	2.06/1.60 3.20/2.47 3.01/2.37 4.63/3.38	ns
Output pad transition times[1] (high drive)	tpr	3.0–3.6 V 3.0–3.6 V 1.65–1.95 V 1.65–1.95 V	25 pF 50 pF 25 pF 50 pF	1.60/1.39 2.94/2.51 1.85/1.48 2.93/2.37	2.23/1.79 4.05/3.17 2.90/2.17 4.56/3.40	3.26/2.50 5.72/4.27 4.75/3.43 7.33/5.26	
Output pad transition times[1] (standard drive)	tpr	3.0–3.6 V 3.0–3.6 V 1.65–1.95 V 1.65–1.95 V	25 pF 50 pF 25 pF 50 pF	3.07/2.62 5.82/4.95 3.04/2.47 5.37/4.40	4.22/3.30 7.94/6.19 4.73/3.50 7.70/8.10	6.03/4.48 11.28/8.28 3.01/2.36 4.63/3.38	
Output pad propagation delay[1] (max. drive), 50%–50%	tpo	3.0–3.6 V 3.0–3.6 V 1.65–1.95 V 1.65–1.95 V	25 pF 50 pF 25 pF 50 pF	1.92/2.1 2.44/2.53 2.05/2.27 2.71/2.84	2.96/2.96 3.7/3.64 3.32/3.67 4.39/4.51	4.47/4.38 5.54/5.31 5.27/5.85 7.00/7.15	ns
Output pad propagation delay[1] (high drive), 50%–50%	tpo	3.0–3.6 V 3.0–3.6 V 1.65–1.95 V 1.65–1.95 V	25 pF 50 pF 25 pF 50 pF	2.35/2.49 3.31/3.43 2.58/2.69 3.62/3.60	3.58/3.61 4.9/4.786 4.17/4.27 5.86/5.61	5.35/5.24 7.19/6.8 6.64/6.74 9.34/8.76	
Output pad propagation delay[1] (standard drive), 50%–50%	tpo	3.0–3.6 V 3.0–3.6 V 1.65–1.95 V 1.65–1.95 V	25 pF 50 pF 25 pF 50 pF	3.39/3.51 5.28/5.35 3.71/3.68 5.52/5.32	5.03/4.89 7.6/7.14 6.03/5.75 8.80/7.96	7.39/6.95 10.97/9.45 9.64/8.97 13.9/11.3	
Output pad propagation delay[1] (max. drive), 40%–60%	tpo	3.0–3.6 V 3.0–3.6 V 1.65–1.95 V 1.65–1.95 V	25 pF 50 pF 25 pF 50 pF	1.942/2.04 2.378/2.48 2.03/2.28 2.59/2.73	2.923/2.95 3.541/3.53 3.19/3.59 4.10/4.33	4.33/4.3 5.29/5.09 4.97/5.64 6.43/6.77	ns
Output pad propagation delay[1] (high drive), 40%–60%	tpo	3.0–3.6 V 3.0–3.6 V 1.65–1.95 V 1.65–1.95 V	25 pF 50 pF 25 pF 50 pF	2.29/2.44 3.05/3.20 2.45/2.62 3.36/3.39	3.42/3.49 4.46/4.45 3.86/4.07 5.34/5.22	5.05/5.02 6.53/6.3 6.02/6.35 8.40/8.08	
Output pad propagation delay[1] (standard drive), 40%–60%	tpo	3.0–3.6 V 3.0–3.6 V 1.65–1.95 V 1.65–1.95 V	25 pF 50 pF 25 pF 50 pF	3.12/3.26 4.60/4.73 3.43/3.46 4.89/4.79	4.58/4.53 6.61/6.32 5.48/5.34 7.75/7.16	6.69/6.42 9.5/8.32 8.65/8.26 12.2/9.97	

Table 21. Slow I/O AC Parameters (continued)

Parameter	Symbol	Test Voltage	Test Capacitance	Min. Rise/Fall	Typ. Rise/Fall	Max. Rise/Fall	Units
Output enable to output valid delay[1] (max. drive), 50%–50%	tpv	3.0–3.6 V 3.0–3.6 V 1.65–1.95 V 1.65–1.95 V	25 pF 50 pF 25 pF 50 pF	2.13/2.01 2.65/2.46 2.31/2.45 2.95/3.01	3.3/3.045 4.038/3.639 3.76/4.00 4.81/4.82	5.072/4.609 6.142/5.423 6.11/6.47 7.81/7.73	ns
Output enable to output valid delay[1] (high drive), 50%–50%	tpv	3.0–3.6 V 3.0–3.6 V 1.65–1.95 V 1.65–1.95 V	25 pF 50 pF 25 pF 50 pF	2.56/2.43 3.55/3.21 2.85/2.90 3.87/3.78	3.91/3.604 5.21/4.598 4.65/4.64 6.31/5.95	5.937/5.36 7.776/6.694 7.58/7.44 10.3/9.43	
Output enable to output valid delay[1] (standard drive), 50%–50%	tpv	3.0–3.6 V 3.0–3.6 V 1.65–1.95 V 1.65–1.95 V	25 pF 50 pF 25 pF 50 pF	3.60/3.28 5.50/4.81 4.04/3.94 5.85/5.56	5.35/4.70 7.93/6.603 6.65/6.21 9.47/8.49	7.97/6.836 11.58/9.338 10.9/9.22 15.5/13.3	
Output enable to output valid delay[1] (max. drive), 40%–60%	tpv	3.0–3.6 V 3.0–3.6 V 1.65–1.95 V 1.65–1.95 V	25 pF 50 pF 25 pF 50 pF	2.152/1.7 2.6/2.07 2.28/2.46 2.83/2.93	3.25/2.68 3.88/3.17 3.62/3.92 4.50/4.62	4.93/4.162 5.842/4.846 5.77/6.24 7.20/7.32	ns
Output enable to output valid delay[1] (high drive), 40%–60%	tpv	3.0–3.6 V 3.0–3.6 V 1.65–1.95 V 1.65–1.95 V	25 pF 50 pF 25 pF 50 pF	2.497/2.036 3.254/2.647 2.71/2.81 3.59/3.56	3.75/3.135 4.8/3.9 4.31/4.23 5.75/5.54	5.633/4.782 7.117/5.84 6.89/7.01 9.23/8.71	
Output enable to output valid delay[1] (standard drive), 40%–60%	tpv	3.0–3.6 V 3.0–3.6 V 1.65–1.95 V 1.65–1.95 V	25 pF 50 pF 25 pF 50 pF	3.326/2.7 4.81/3.85 3.73/3.69 5.16/4.99	4.9/3.9 6.9/5.4 6.04/5.77 8.28/7.61	7.269/5.95 10.12/7.86 9.81/9.11 13.4/11.8	
Output pad slew rate[2] (max. drive)	tps	3.0–3.6 V 3.0–3.6 V 1.65–1.95 V 1.65–1.95 V	25 pF 50 pF 25 pF 50 pF	0.79/1.12 0.49/0.73 0.30/0.42 0.20/0.29	1.30/1.77 0.84/1.23 0.54/0.73 0.35/0.50	2.02/2.58 1.19/1.58 0.91/1.20 0.60/0.80	V/ns
Output pad slew rate[2] (high drive)	tps	3.0–3.6 V 3.0–3.6 V 1.65–1.95 V 1.65–1.95 V	25 pF 50 pF 25 pF 50 pF	0.48/0.72 0.27/0.42 0.19/0.28 0.12/0.18	0.76/1.10 0.41/0.62 0.34/0.49 0.34/0.49	1.17/1.56 0.63/0.86 0.58/0/79 0.36/0.49	
Output pad slew rate[2] (standard drive)	tps	3.0–3.6 V 3.0–3.6 V 1.65–1.95 V 1.65–1.95 V	25 pF 50 pF 25 pF 50 pF	0.25/0.40 0.14/0.21 0.12/0.18 0.07/0.11	0.40/0.59 0.21/0.32 0.20/0.30 0.11/0.17	0.60/0.83 0.32/0.44 0.34/0.47 0.20/0.27	

Table 21. Slow I/O AC Parameters (continued)

Parameter	Symbol	Test Voltage	Test Capacitance	Min. Rise/Fall	Typ. Rise/Fall	Max. Rise/Fall	Units
Output pad dI/dt[3] (max. drive)	tdit	3.0–3.6 V 3.0–3.6 V 1.65–1.95 V 1.65–1.95 V	25 pF 50 pF 25 pF 50 pF	15 16 7 7	36 38 21 22	76 80 56 58	mA /ns
Output pad dI/dt[3] (high drive)	tdit	3.0–3.6 V 3.0–3.6 V 1.65–1.95 V 1.65–1.95 V	25 pF 50 pF 25 pF 50 pF	8 9 5 5	20 21 14 15	45 47 38 40	
Output pad dI/dt[3] (standard drive)	tdit	3.0–3.6 V 3.0–3.6 V 1.65–1.95 V 1.65–1.95 V	25 pF 50 pF 25 pF 50 pF	4 4 2 2	10 10 7 7	22 23 18 19	
Input pad propagation delay without hysteresis, 50%–50%[4]	tpi	—	1.6 pF	0.82/0.47 0.74/1	1.1/0.76 1.1/1.5	1.6/1.04 1.75/2.16	ns
Input pad propagation delay with hysteresis, 50%–50%[4]	tpi	—	1.6 pF	1.1/1.3 1.75/1.63	1.43/1.6 2.67/2.22	2/2 2.92/3	
Input pad propagation delay without hysteresis, 40%–60%[4]	tpi	—	1.6 pF	1.62/1.28 1.82/1.55	1.9/1.56 2.28/1.87	2.38/1.82 2.95/2.54	
Input pad propagation delay with hysteresis, 40%–60%[4]	tpi	—	1.6 pF	1.88/2.1 2.4/2.6	2.2/2.4 3/3.07	2.7/2.75 3.77/3.71	
Input pad transition times without hysteresis[4]	trfi	—	1.6 pF	0.16/0.12	0.23/0.18	0.33/0.29	
Input pad transition times with hysteresis[4]	trfi		1.6 pF	0.16/0.13	0.22/0.18	0.33/0.29	
Maximum input transition times[5]	trm	—	—	—	—	25	ns

1 Maximum condition for tpr, tpo, and tpv: wcs model, 1.1 V, I/O 3.0 V (3.0–3.6 V range) or 1.65 V (1.65–1.95 V range), and 105 °C. Minimum condition for tpr, tpo, and tpv: bcs model, 1.3 V, I/O 3.6 V (3.0–3.6 V range) or 1.95 V (1.65–1.95 V range), and –40 °C. Input transition time from core is 1 ns (20%–80%).

2 Minimum condition for tps: wcs model, 1.1 V, I/O 3.0 V (3.0–3.6 V range) or 1.65 V (1.65–1.95 V range), and 105 °C. tps is measured between VIL to VIH for rising edge and between VIH to VIL for falling edge.

3 Maximum condition for tdit: bcs model, 1.3 V, I/O 3.6 V (3.0–3.6 V range) or 1.95 V (1.65–1.95 V range), and –40 °C.

4 Maximum condition for tpi and trfi: wcs model, 1.1 V, I/O 3.0 V (3.0–3.6 V range) or 1.65 V (1.65–1.95 V range), and 105 °C. Minimum condition for tpi and trfi: bcs model, 1.3 V, I/O 3.6 V or 1.95 V (1.65–1.95 V range), and –40 °C. Input transition time from pad is 5 ns (20%–80%).

5 Hysteresis mode is recommended for input with transition time greater than 25 ns.

3.6.2 Fast I/O AC Parameters

Table 22 shows the fast I/O AC parameters for OVDD = 1.65–1.95 V.

Table 22. Fast I/O AC Parameters for OVDD = 1.65–1.95 V

Parameter	Symbol	Test Condition	Min. Rise/Fall	Typ.	Max. Rise/Fall	Units
Duty cycle	Fduty	—	40	—	60	%
Output pad transition times[1] (max. drive)	tpr	25 pF 50 pF	0.88/0.77 1.45/1.24	1.36/1.10 2.20/1.80	2.10/1.70 3.50/2.70	ns
Output pad transition times[1] (high drive)	tpr	25 pF 50 pF	1.10/0.92 1.84/1.54	1.65/1.33 2.80/2.20	2.64/2.10 4.40/3.30	ns
Output pad transition times[1] (standard drive)	tpr	25 pF 50 pF	1.60/1.35 2.74/2.26	2.47/1.95 4.20/3.20	3.99/3.10 6.56/4.86	ns
Output pad propagation delay[1] (max. drive), 50%–50%	tpo	25 pF 50 pF	1.64/1.53 2.15/2.01	2.68/2.41 3.47/3.08	4.25/3.74 5.50/4.77	ns
Output pad propagation delay[1] (high drive), 50%–50%	tpo	25 pF 50 pF	1.82/1.71 2.46/2.29	2.98/2.66 3.96/3.49	4.74/4.13 6.27/5.37	ns
Output pad propagation delay[1] (standard drive), 50%–50%	tpo	25 pF 50 pF	2.24/2.06 3.17/2.92	3.63/3.15 5.09/4.41	5.73/4.84 8.06/6.75	ns
Output pad propagation delay[1] (max. drive), 40%–60%	tpo	25 pF 50 pF	1.67/1.58 2.09/1.98	2.63/2.38 3.30/2.97	4.06/3.63 5.14/4.51	ns
Output pad propagation delay[1] (high drive), 40%–60%	tpo	25 pF 50 pF	1.94/1.73 2.34/2.22	2.89/2.61 3.69/3.30	4.49/3.97 5.76/5.01	ns
Output pad propagation delay[1] (standard drive), 40%–60%	tpo	25 pF 50 pF	2.15/1.99 2.94/2.74	3.39/2.99 4.65/4.07	5.28/4.53 7.28/6.13	ns
Output enable to output valid delay[1] (max. drive), 50%–50%	tpv	25 pF 50 pF	1.87/1.70 2.36/2.16	3.06/2.71 3.83/3.37	4.97/4.30 6.18/5.30	ns
Output enable to output valid delay[1] (high drive), 50%–50%	tpv	25 pF 50 pF	2.05/1.88 2.68/2.45	3.67/2.98 4.32/3.78	5.46/4.72 6.98/5.92	ns
Output enable to output valid delay[1] (standard drive), 50%–50%	tpv	25 pF 50 pF	2.49/2.25 3.40/3.08	4.06/3.50 5.50/4.73	6.57/5.49 8.88/7.37	ns
Output enable to output valid delay[1] (max. drive), 40%–60%	tpv	25 pF 50 pF	1.90/1.74 2.30/2.13	3.00/2.69 3.65/3.24	4.76/4.18 5.79/5.02	ns
Output enable to output valid delay[1] (high drive), 40%–60%	tpv	25 pF 50 pF	2.06/1.90 2.56/2.37	3.28/2.33 4.04/3.59	5.21/4.54 6.43/5.54	ns
Output enable to output valid delay[1] (standard drive), 40%–60%	tpv	25 pF 50 pF	2.39/2.18 3.16/2.89	3.80/3.18 5.03/4.37	6.05/5.14 8.02/6.72	ns
Output pad slew rate[2] (max. drive)	tps	25 pF 50 pF	0.40/0.57 0.25/0.36	0.72/0.97 0.43/0.61	1.2/1.5 0.72/0.95	V/ns
Output pad slew rate[2] (high drive)	tps	25 pF 50 pF	0.38/0.48 0.20/0.30	0.59/0.81 0.34/0.50	0.98/1.27 0.56/0.72	V/ns
Output pad slew rate[2] (standard drive)	tps	25 pF 50 pF	0.23/0.32 0.13/0.20	0.40/0.55 0.23/0.34	0.66/0.87 0.38/0.52	V/ns

Table 22. Fast I/O AC Parameters for OVDD = 1.65–1.95 V (continued)

Parameter	Symbol	Test Condition	Min. Rise/Fall	Typ.	Max. Rise/Fall	Units
Output pad dI/dt[3] (max. drive)	tdit	25 pF 50 pF	7 7	43 46	112 118	mA/ns
Output pad dI/dt[3] (high drive)	tdit	25 pF 50 pF	11 12	31 33	81 85	mA/ns
Output pad dI/dt[3] (standard drive)	tdit	25 pF 50 pF	9 10	27 28	71 74	mA/ns
Input pad propagation delay without hysteresis, 50%–50%[4]	tpi	1.6 pF	0.74/1	1.1/1.5	1.75/2.16	ns
Input pad propagation delay with hysteresis, 50%–50%[4]	tpi	1.6 pF	1.75/1.63	2.67/2.22	2.92/3	ns
Input pad propagation delay without hysteresis, 40%–60%[4]	tpi	1.6 pF	1.82/1.55	2.28/1.87	2.95/2.54	ns
Input pad propagation delay with hysteresis, 40%–60%[4]	tpi	1.6 pF	2.4/2.6	3/3.07	3.77/3.71	ns
Input pad transition times without hysteresis[4]	trfi	1.6 pF	0.16/0.12	0.30/0.18	0.33/0.29	ns
Input pad transition times with hysteresis[4]	trfi	1.6 pF	0.16/0.13	0.30/0.18	0.33/0.29	ns
Maximum input transition times[5]	trm	—	—	—	25	ns

1 Maximum condition for tpr, tpo, and tpv: wcs model, 1.1 V, I/O 1.65 V, and 105 °C. Minimum condition for tpr, tpo, and tpv: bcs model, 1.3 V, I/O 1.95 V, and –40 °C. Input transition time from core is 1 ns (20%–80%).

2 Minimum condition for tps: wcs model, 1.1 V, I/O 1.65 V and 105 °C. tps is measured between VIL to VIH for rising edge and between VIH to VIL for falling edge.

3 Maximum condition for tdit: bcs model, 1.3 V, I/O 1.95 V and –40 °C.

4 Maximum condition for tpi and trfi: wcs model, 1.1 V, I/O 1.65 V and 105 °C. Minimum condition for tpi and trfi: bcs model, 1.3 V, I/O 1.95 V and –40 °C. Input transition time from pad is 5 ns (20%–80%).

5 Hysteresis mode is recommended for input with transition time greater than 25 ns.

Table 23 shows the fast I/O AC parameters for OVDD = 3.0–3.6 V.

Table 23. Fast I/O AC Parameters for OVDD = 3.0–3.6 V

Parameter	Symbol	Test Condition	Min. Rise/Fall	Typ.	Max. Rise/Fall	Units
Duty Cycle	Fduty		40		60	%
Output Pad Transition Times[1] (Max Drive)	tpr	25 pF 50 pF	0.80/0.70 1.40/1.60	1.12/2.51 1.60/2.39	1.64/1.32 2.84/2.10	ns
Output Pad Transition Times[1] (High Drive)	tpr	25 pF 50 pF	1.00/0.90 1.95/1.66	1.43/1.16 2.66/2.09	2.05/1.60 3.70/2.80	ns
Output Pad Transition Times[1] (Standard Drive)	tpr	25 pF 50 pF	1.50/1.30 2.90/2.50	2.09/1.67 3.40/3.09	3.00/2.30 5.56/4.12	ns
Output Pad Propagation Delay[1] (Max Drive), 50%–50%	tpo	25 pF 50 pF	1.20/1.28 1.67/1.75	1.74/1.73 2.39/2.32	2.67/2.52 3.58/3.33	ns

Table 23. Fast I/O AC Parameters for OVDD = 3.0–3.6 V (continued)

Output Pad Propagation Delay[1] (High Drive), 50%–50%	tpo	25 pF 50 pF	1.35/1.42 1.98/2.04	1.95/1.91 2.81/2.68	2.96/2.76 4.16/3.78	ns
Output Pad Propagation Delay[1] (Standard Drive), 50%–50%	tpo	25 pF 50 pF	1.77/1.85 2.70/2.78	2.54/2.48 3.82/3.62	3.80/3.60 5.62/5.10	ns
Output Pad Propagation Delay[1] (Max Drive), 40%–60%	tpo	25 pF 50 pF	1.37/1.50 1.74/1.88	1.94/2.05 2.46/2.55	2.95/3.07 3.71/3.75	ns
Output Pad Propagation Delay[1] (High Drive), 40%–60%	tpo	25 pF 50 pF	1.48/1.61 1.98/2.10	2.11/2.19 2.78/2.81	3.19/3.26 4.14/4.09	ns
Output Pad Propagation Delay[1] (Standard Drive), 40%–60%	tpo	25 pF 50 pF	1.84/1.97 2.58/2.71	2.61/2.67 3.62/3.58	3.95/3.95 5.36/5.15	ns
Output Enable to Output Valid Delay[1] (Max Drive), 50%–50%	tpv	25 pF 50 pF	1.34/1.32 1.81/1.79	1.91/1.81 2.56/2.40	2.92/2.67 3.83/3.47	ns
Output Enable to Output Valid Delay[1] (High Drive), 50%–50%	tpv	25 pF 50 pF	1.48/1.47 2.12/2.1	2.12/2.00 2.98/2.76	3.21/2.92 4.41/3.94	ns
Output Enable to Output Valid Delay[1] (Standard Drive), 50%–50%	tpv	25 pF 50 pF	1.90/1.90 2.85/2.83	2.70/2.60 4.00/3.70	4.07/3.74 5.86/5.24	ns
Output Enable to Output Valid Delay[1] (Max Drive), 40%–60%	tpv	25 pF 50 pF	1.55/1.42 1.93/1.81	2.25/2.08 2.77/2.58	3.50/3.31 4.24/3.99	ns
Output Enable to Output Valid Delay[1] (High Drive), 40%–60%	tpv	25 pF 50 pF	1.67/1.54 2.16/2.03	2.41/2.23 3.08/2.86	3.74/3.51 4.66/4.34	ns
Output Enable to Output Valid Delay[1] (Standard Drive), 40%–60%	tpv	25 pF 50 pF	2.02/1.90 2.76/2.63	2.91/2.71 3.91/3.62	4.48/4.21 5.85/5.39	ns
Output Pad Slew Rate[2] (Max Drive)	tps	25 pF 50 pF	0.96/1.40 0.54/0.83	1.54/2.10 0.85/1.24	2.30/3.00 1.26/1.70	V/ns
Output Pad Slew Rate[2] (High Drive)	tps	25 pF 50 pF	0.76/1.10 0.41/0.64	1.19/1.71 0.63/0.95	1.78/2.39 0.95/1.30	V/ns
Output Pad Slew Rate[2] (Standard Drive)	tps	25 pF 50 pF	0.52/0.78 0.28/0.44	0.80/1.19 0.43/0.64	1.20/1.60 0.63/0.87	V/ns
Output Pad di/dt[3] (Max Drive)	didt	25 pF 50 pF	46 49	108 113	250 262	mA/ns
Output Pad di/dt[3] (High Drive)	didt	25 pF 50 pF	35 37	82 86	197 207	mA/ns
Output Pad di/dt[3] (Standard Drive)	didt	25 pF 50 pF	22 23	52 55	116 121	mA/ns
Input Pad Propagation Delay without Hysteresis, 50%–50%[4]	tpi	1.6pF	0.729/0.458	0.97/0.0649	1.404/0.97	ns
Input Pad Propagation Delay with Hysteresis, 50%–50%[4]	tpi	1.6pF	1.203/0.938	1.172/1.187	1.713/1.535	ns
Input Pad Propagation Delay without Hysteresis, 40%–60%[4]	tpi	1.6pF	0.879/0.977	1.434/1.12	1.854/1.427	ns

Table 23. Fast I/O AC Parameters for OVDD = 3.0–3.6 V (continued)

Input Pad Propagation Delay with Hysteresis, 40%–60%[4]	tpi	1.6pF	1.353/1.457	1.637/1.659	2.163/1.991	ns
Input Pad Transition Times without Hysteresis[4]	trfi	1.6pF	0.16/0.12	0.23/0.18	0.33/0.29	ns
Input Pad Transition Times with Hysteresis[4]	trfi	1.6pF	0.16/0.13	0.22/0.18	0.33/0.29	ns
Maximum Input Transition Times[5]	trm	—	—	—	—	ns

1 Maximum condition for tpr, tpo, and tpv: wcs model, 1.1 V, IO 3.0 V and 105 °C. Minimum condition for tpr, tpo, and tpv: bcs model, 1.3 V, IO 3.6 V and –40 °C. Input transition time from core is 1ns (20%–80%).

2 Minimum condition for tps: wcs model, 1.1 V, IO 3.0 V and 105 °C. tps is measured between VIL to VIH for rising edge and between VIH to VIL for falling edge.

3 Maximum condition for tdit: bcs model, 1.3 V, IO 3.6 V and –40 °C.

4 Maximum condition for tpi and trfi: wcs model, 1.1 V, IO 3.0 V and 105 °C. Minimum condition for tpi and trfi: bcs model, 1.3 V, IO 3.6 V and –40 °C. Input transition time from pad is 5 ns (20%–80%).

5 Hysteresis mode is recommended for input with transition time greater than 25 ns.

3.6.3 DDR I/O AC Parameters

The DDR pad type is configured by the IOMUXC_SW_PAD_CTL_GRP_DDRTYPE register (see Chapter 4, “External Signals and Pin Multiplexing,” in the *i.MX25 Multimedia Applications Processor Reference Manual*).

3.6.3.1 DDR_TYPE = 00 Standard Setting I/O AC Parameters and Requirements

Table 24 shows AC parameters for mobile DDR I/O. These settings are suitable for mDDR and DDR2 1.8V (± 5%) applications.

Table 24. AC Parameters for Mobile DDR I/O

Parameter	Symbol	Load Condition	Min. Rise/Fall	Typ.	Max. Rise/Fall	Units
Duty cycle	Fduty	—	40	50	60	%
Clock frequency[1]	f	—	—	—	133	MHz
Output pad transition times[1] (max. drive)	tpr	25 pF 50 pF	0.52/0.51 0.98/0.96	0.79/0.72 1.49/1.34	1.25/1.09 2.31/1.98	ns
Output pad transition times[1] (high drive)	tpr	25 pF 50 pF	1.13/1.10 2.15/2.10	1.74/1.55 3.28/2.92	2.71/2.30 5.11/4.31	ns
Output pad transition times[1] (standard drive)	tpr	25 pF 50 pF	2.26/2.19 4.30/4.18	3.46/3.07 6.59/5.79	5.39/4.56 10.13/8.55	ns
Output pad propagation delay[1] (max. drive), 50%–50%	tpo	15 pF 35 pF	0.80/1.03 1.06/1.32	1.36/1.50 1.76/1.90	2.21/2.40 2.83/2.82	ns
Output pad propagation delay[1] (high drive), 50%–50%	tpo	15 pF 35 pF	1.04/1.27 1.63/1.90	1.74/1.83 2.63/2.69	2.79/2.70 4.18/3.86	ns
Output pad propagation delay[1] (standard drive), 50%–50%	tpo	15 pF 35 pF	1.55/1.80 2.72/3.06	2.53/2.57 4.31/4.29	4.03/3.76 6.80/6.19	ns
Output pad propagation delay[1] (max. drive), 40%–60%	tpo	15 pF 35 pF	0.80/0.91 1.06/1.12	1.44/1.59 1.76/1.91	2.24/2.29 2.74/2.75	ns

Table 24. AC Parameters for Mobile DDR I/O (continued)

Parameter	Symbol	Load Condition	Min. Rise/Fall	Typ.	Max. Rise/Fall	Units
Output pad propagation delay[1] (high drive), 40%–60%	tpo	15 pF 35 pF	1.04/1.09 1.63/1.56	1.73/1.83 2.43/2.52	2.69/2.62 3.79/3.62	ns
Output pad propagation delay[1] (standard drive), 40%–60%	tpo	15 pF 35 pF	1.50/1.74 2.73/2.42	2.36/2.41 3.77/3.78	3.67/3.46 5.86/5.37	ns
Output enable to output valid delay[1] (max. drive), 50%–50%	tpv	15 pF 35 pF	1.17/1.01 1.43/1.30	1.93/1.61 2.33/2.00	3.06/2.55 3.69/3.13	ns
Output enable to output valid delay[1] (high drive), 50%–50%	tpv	15 pF 35 pF	1.38/1.28 1.97/1.92	2.25/1.99 3.16/2.86	3.58/3.10 5.01/4.39	ns
Output enable to output valid delay[1] (standard drive), 50%–50%	tpv	15 pF 35 pF	1.92/1.57 3.12/3.16	3.11/2.79 4.97/4.59	4.98/4.13 7.97/6.98	ns
Output enable to output valid delay[1] (max. drive), 40%–60%	tpv	15 pF 35 pF	1.28/1.12 1.49/1.36	2.01/1.70 2.33/2.01	3.09/2.60 3.60/3.06	ns
Output enable to output valid delay[1] (high drive), 40%–60%	tpv	15 pF 35 pF	1.43/1.33 1.90/1.84	2.24/1.99 2.96/2.68	3.47/3.02 4.59/4.03	ns
Output enable to output valid delay[1] (standard drive), 40%–60%	tpv	15 pF 35 pF	1.85/1.78 2.80/2.81	2.91/2.62 4.37/4.53	4.54/3.96 6.88/6.05	ns
Output pad slew rate[2] (max. drive)	tps	25 pF 50 pF	0.80/0.92 0.43/0.50	1.35/1.50 0.72/0.81	2.23/2.27 1.66/1.68	V/ns
Output pad slew rate[2] (high drive)	tps	25 pF 50 pF	0.37/0.43 0.19/0.23	0.62/0.70 0.33/0.37	1.03/1.05 0.75/0.77	V/ns
Output pad slew rate[2] (standard drive)	tps	25 pF 50 pF	0.18/0.22 0.10/0.12	0.31/0.35 0.16/0.18	0.51/0.53 0.38/0.39	V/ns
Output pad dI/dt[3] (max. drive)	tdit	25 pF 50 pF	64 69	171 183	407 432	mA/ns
Output pad dI/dt[3] (high drive)	tdit	25 pF 50 pF	37 39	100 106	232 246	mA/ns
Output pad di/dt[3] (standard drive)	tdit	25 pF 50 pF	18 20	50 52	116 123	mA/ns
Input pad transition times[4]	trfi	1.0 pF	0.07/0.08	0.11/0.13	0.16/0.20	ns
Input pad propagation delay, 50%–50%[4]	tpi	1.0 pF	0.77/1.00	1.22/1.45	1.89/2.21	ns
Input pad propagation delay, 40%–60%[4]	tpi	1.0 pF	1.59/1.82	2.04/2.27	2.69/3.01	ns

1 Maximum condition for tpr, tpo, tpi, and tpv: wcs model, 1.1 V, I/O 1.65 V, and 105 °C. Minimum condition for tpr, tpo, and tpv: bcs model, 1.3 V, I/O 1.95 V and –40 °C. Input transition time from core is 1 ns (20%–80%).

2 Minimum condition for tps: wcs model, 1.1 V, I/O 1.65 V, and 105 °C. tps is measured between VIL to VIH for rising edge and between VIH to VIL for falling edge.

3 Maximum condition for tdit: bcs model, 1.3 V, I/O 1.95 V, and –40 °C.

4 Maximum condition for tpi and trfi: wcs model, 1.1 V, I/O 1.65 V and 105 °C. Minimum condition for tpi and trfi: bcs model, 1.3 V, I/O 1.95 V and –40 °C. Input transition time from pad is 5 ns (20%–80%).

Table 25 shows the AC parameters for mobile DDR pbijtov18_33_ddr_clk I/O.

Table 25. AC Parameters for Mobile DDR pbijtov18_33_ddr_clk I/O

Parameter	Symbol	Load Condition	Min. Rise/Fall	Typ.	Max. Rise/Fall	Units
Duty cycle	Fduty	—	40	50	60	%
Clock frequency[1]	f	—	—	—	133	MHz
Output pad transition times[1] (max. drive)	tpr	25 pF 50 pF	0.52/0.51 0.98/0.96	0.79/0.72 1.49/1.34	1.25/1.09 2.31/1.98	ns
Output pad transition times[1] (high drive)	tpr	25 pF 50 pF	1.13/1.10 2.15/2.10	1.74/1.55 3.28/2.92	2.71/2.30 5.11/4.31	ns
Output pad transition times[1] (standard drive)	tpr	25 pF 50 pF	2.26/2.19 4.30/4.18	3.46/3.07 6.59/5.79	5.39/4.56 10.13/8.55	ns
Output pad propagation delay[1] (max. drive), 50%–50% input signals and crossing of output signals	tpo	15 pF 35 pF	1.28/1.19 1.56/1.47	1.97/1.83 2.37/2.23	2.98/2.78 3.57/3.37	ns
Output pad propagation delay[1] (high drive), 50%–50% input signals and crossing of output signals	tpo	15 pF 35 pF	1.54/1.43 2.14/2.04	2.34/2.20 3.22/3.08	3.54/3.33 4.85/4.65	ns
Output pad propagation delay[1] (standard drive), 50%–50% input signals and crossing of output signals	tpo	15 pF 35 pF	2.05/1.94 3.27/3.16	3.11/2.96 4.86/4.72	4.70/4.50 7.33/7.12	ns
Output pad propagation delay[1] (max. drive), 40%–60% input signals and crossing of output signals	tpo	15 pF 35 pF	1.45/1.36 1.73/1.64	2.13/2.00 2.53/2.40	3.14/2.94 3.74/3.54	ns
Output pad propagation delay[1] (high drive), 40%–60% input signals and crossing of output signals	tpo	15 pF 35 pF	1.70/1.60 2.31/2.21	2.51/2.37 3.38/3.24	3.70/3.50 5.02/4.82	ns
Output pad propagation delay[1] (standard drive), 40%–60% input signals and crossing of output signals	tpo	15 pF 35 pF	2.22/2.11 3.43/3.32	3.27/3.13 5.02/4.88	4.87/4.66 7.49/7.29	ns
Output enable to output valid delay[1] (max. drive), 50%–50%	tpv	15 pF 35 pF	1.16/1.12 1.42/1.41	1.91/1.81 2.31/2.20	3.10/2.89 3.72/3.47	ns
Output enable to output valid delay[1] (high drive), 50%–50%	tpv	15 pF 35 pF	1.39/1.39 1.98/2.02	2.28/2.18 3.18/3.04	3.69/3.43 5.08/4.69	ns
Output enable to output valid delay[1] (standard drive), 50%–50%	tpv	15 pF 35 pF	1.90/1.94 3.07/3.20	3.09/2.94 4.88/4.66	4.95/4.55 7.73/7.05	ns
Output enable to output valid delay[1] (max. drive), 40%–60%	tpv	15 pF 35 pF	1.28/1.24 1.49/1.47	2.00/1.90 2.32/2.21	3.14/2.93 3.64/3.41	ns
Output enable to output valid delay[1] (high drive), 40%–60%	tpv	15 pF 35 pF	1.45/1.44 1.92/1.95	2.28/2.19 2.99/2.87	3.60/3.36 4.69/4.36	ns
Output enable to output valid delay[1] (standard drive), 40%–60%	tpv	15 pF 35 pF	1.85/1.88 2.78/2.88	2.92/2.79 4.34/4.16	4.5894.25 6.79/6.24	ns
Output pad slew rate[2] (max. drive)	tps	25 pF 50 pF	0.37/0.45 0.30/0.36	0.64/0.79 0.52/0.61	1.14/1.36 0.90/1.02	V/ns

Table 25. AC Parameters for Mobile DDR pbijtov18_33_ddr_clk I/O (continued)

Parameter	Symbol	Load Condition	Min. Rise/Fall	Typ.	Max. Rise/Fall	Units
Output pad slew rate[2] (high drive)	tps	25 pF 50 pF	0.30/0.37 0.21/0.25	0.51/0.63 0.36/0.42	091/1.06 0.63/0.67	V/ns
Output pad slew rate[2] (standard drive)	tps	25 pF 50 pF	0.22/0.26 0.13/0.16	0.37/0.44 0.23/0.26	0.65/0.72 0.39/0.40	V/ns
Output pad dI/dt[3] (max. drive)	tdit	25 pF 50 pF	65 70	171 183	426 450	mA/ns
Output pad dI/dt[3] (high drive)	tdit	25 pF 50 pF	31 33	82 87	233 245	mA/ns
Output pad dI/dt[3] (standard drive)	tdit	25 pF 50 pF	16 17	43 46	115 120	mA/ns
Input pad transition times[4]	trfi	1.0 pF	0.07/0.08	0.11/0.13	0.16/0.20	ns
Input pad propagation delay, 50%–50%[4]	tpi	1.0 pF	0.84/0.84	1.40/1.34	2.25/2.16	ns
Input pad propagation delay, 40%–60%[4]	tpi	1.0 pF	1.66/1.66	2.22/2.16	3.06/2.97	ns

1 Maximum condition for tpr, tpo, tpi, and tpv: wcs model, 1.1 V, I/O 1.65 V, and 105 °C. Minimum condition for tpr, tpo, and tpv: bcs model, 1.3 V, I/O 1.95 V and –40 °C. Input transition time from core is 1 ns (20%–80%).

2 Minimum condition for tps: wcs model, 1.1 V, I/O 1.65 V, and 105 °C. tps is measured between VIL to VIH for rising edge and between VIH to VIL for falling edge.

3 Maximum condition for tdit: bcs model, 1.3 V, I/O 1.95 V, and –40 °C.

4 Maximum condition for tpi and trfi: wcs model, 1.1 V, I/O 1.65 V and 105 °C. Minimum condition for tpi and trfi: bcs model, 1.3 V, I/O 1.95 V and –40 °C. Input transition time from pad is 5 ns (20%–80%).

Table 26 shows the AC requirements for mobile DDR I/O.

Table 26. AC Requirements for Mobile DDR I/O

Parameter	Symbol	Min.	Max.	Units
AC input logic high	VIH(ac)	0.8 × OVDD	OVDD+0.3	V
AC input logic low	VIL(ac)	–0.3	0.2 × OVDD	V
AC differential input voltage	Vid(ac)	0.6 × OVDD	OVDD+0.6	V
AC differential cross point voltage for input	Vix(ac)	0.4 × OVDD	OVDD+0.6	V

3.6.3.2 DDR_TYPE = 01 SDRAM I/O AC Parameters and Requirements

Table 27 shows AC parameters for SDRAM I/O.

Table 27. AC Parameters for SDRAM I/O

Parameter	Symbol	Load Condition	Min. Rise/Fall	Typ.	Max. Rise/Fall	Units
Duty cycle	Fduty	—	40	50	60	%
Clock frequency[1]	f	—	—	—	133	MHz
Output pad transition times[1] (max. drive)	tpr	25 pF 50 pF	0.82/0.87 1.56/1.67	1.14/1.13 2.13/2.09	1.62/1.50 3.015/2.77	ns
Output pad transition times[1] (high drive)	tpr	25 pF 50 pF	1.23/1.31 2.31/2.47	1.71/1.68 3.22/3.12	2.39/2.22 4.53/4.16	ns
Output pad transition times[1] (standard drive)	tpr	25 pF 50 pF	2.44/2.60 4.65/4.99	3.38/3.27 6.38/6.23	4.73/4.38 9.05/8.23	ns
Output pad propagation delay[1] (max. drive), 50%–50%	tpo	15 pF 35 pF	0.97/1.19 2.85/3.21	1.69/0.75 2.02/2.30	2.17/2.46 2.93/3.27	ns
Output pad propagation delay[1] (high drive), 50%–50%	tpo	15 pF 35 pF	1.15/1.39 3.57/3.91	1.72/1.93 2.54/2.85	2.51/2.77 3.66/3.97	ns
Output pad propagation delay[1] (standard drive), 50%–50%	tpo	15 pF 35 pF	2.01/1.57 5.73/6.05	2.45/2.69 4.10/4.51	3.54/3.77 5.84/6.13	ns
Output pad propagation delay[1] (max. drive), 40%–60%	tpo	15 pF 35 pF	1.06/1.26 1.38/1.38	1.53/1.73 1.96/2.23	2.18/2.47 2.78/3.12	ns
Output pad propagation delay[1] (high drive), 40%–60%	tpo	15 pF 35 pF	1.15/1.20 1.75/1.67	1.72/1.93 2.37/2.66	2.45/2.71 3.35/3.67	ns
Output pad propagation delay[1] (standard drive), 40%–60%	tpo	15 pF 35 pF	1.91/2.01 2.88/2.56	2.30/2.52 3.59/3.97	3.26/3.50 5.06/5.36	ns
Output enable to output valid delay[1] (max. drive), 50%–50%	tpv	15 pF 35 pF	0.90/1.27 1.07/1.77	1.44/1.89 1.66/2.51	2.19/2.87 2.51/3.69	ns
Output enable to output valid delay[1] (high drive), 50%–50%	tpv	15 pF 35 pF	1.01/1.48 1.37/2.33	1.58/2.16 2.06/3.09	2.38/3.23 3.06/4.46	ns
Output enable to output valid delay[1] (standard drive), 50%–50%	tpv	15 pF 35 pF	1.32/2.14 2.04/3.67	2.02/3.00 3.00/4.91	3.01/4.36 4.40/6.90	ns
Output enable to output valid delay[1] (max. drive), 40%–60%	tpv	15 pF 35 pF	1.03/1.34 1.16/1.74	1.54/1.94 1.74/2.44	2.26/2.88 2.55/3.54	ns
Output enable to output valid delay[1] (high drive), 40%–60%	tpv	15 pF 35 pF	1.11/1.51 1.39/2.10	1.65/2.15 2.03/2.89	2.43/3.16 2.95/4.13	ns
Output enable to output valid delay[1] (standard drive), 40%–60%	tpv	15 pF 35 pF	1.35/2.03 1.91/3.23	1.99/2.83 2.76/4.30	2.89/4.03 3.98/6.01	ns
Output pad slew rate[2] (max. drive)	tps	25 pF 50 pF	1.11/1.20 0.97/0.65	1.74/1.75 0.92/0.94	2.42/2.46 1.39/1.30	V/ns
Output pad slew rate[2] (high drive)	tps	25 pF 50 pF	0.76/0.80 0.40/0.43	1.16/1.19 0.61/0.63	1.76/1.66 0.93/0.87	V/ns

Table 27. AC Parameters for SDRAM I/O (continued)

Parameter	Symbol	Load Condition	Min. Rise/Fall	Typ.	Max. Rise/Fall	Units
Output pad slew rate[2] (standard drive)	tps	25 pF 50 pF	0.38/0.41 0.20/0.22	0.59/0.60 0.31/0.32	0.89/0.82 0.47/0.43	V/ns
Output pad dI/dt[3] (max. drive)	tdit	25 pF 50 pF	89 94	198 209	398 421	mA/ns
Output pad dI/dt[3] (high drive)	tdit	25 pF 50 pF	59 62	132 139	265 279	mA/ns
Output pad dI/dt[3] (standard drive)	tdit	25 pF 50 pF	29 31	65 69	132 139	mA/ns
Input pad transition times[4]	trfi	1.0 pF	0.07/0.08	0.11/0.12	0.16/0.20	ns
Input pad propagation delay, 50%–50%[4]	tpi	1.0 pF	0.35/1.17	0.63/1.53	1.16/2.04	ns
Input pad propagation delay, 40%–60%[4]	tpi	—	1.18/1.99	1.45/2.35	1.97/2.85	—

1 Maximum condition for tpr, tpo, tpi, and tpv: wcs model, 1.1 V, I/O 3.0 V, and 105 °C. Minimum condition for tpr, tpo, and tpv: bcs model, 1.3 V, I/O 3.6 V and –40 °C. Input transition time from core is 1 ns (20%–80%).

2 Minimum condition for tps: wcs model, 1.1 V, I/O 3.0 V, and 105 °C. tps is measured between VIL to VIH for rising edge and between VIH to VIL for falling edge.

3 Maximum condition for tdit: bcs model, 1.3 V, I/O 3.6 V, and –40 °C.

4 Maximum condition for tpi and trfi: wcs model, 1.1 V, I/O 3.0 V and 105 °C. Minimum condition for tpi and trfi: bcs model, 1.3 V, I/O 3.6 V and –40 °C. Input transition time from pad is 5 ns (20%–80%).

Table 28 shows AC parameters for SDRAM pbijtov18_33_ddr_clk I/O.

Table 28. AC Parameters for SDRAM pbijtov18_33_ddr_clk I/O

Parameter	Symbol	Load Condition	Min. Rise/Fall	Typ.	Max. Rise/Fall	Units
Duty cycle	Fduty	—	40	50	60	%
Clock frequency[1]	f	—	—	—	133	MHz
Output pad transition times[1] (max. drive)	tpr	25 pF 50 pF	0.82/0.87 1.56/1.67	1.14/1.13 2.13/2.09	1.62/1.50 3.015/2.77	ns
Output pad transition times[1] (high drive)	tpr	25 pF 50 pF	1.23/1.31 2.31/2.47	1.71/1.68 3.22/3.12	2.39/2.22 4.53/4.16	ns
Output pad transition times[1] (standard drive)	tpr	25 pF 50 pF	2.44/2.60 4.65/4.99	3.38/3.27 6.38/6.23	4.73/4.38 9.05/8.23	ns
Output pad propagation delay[1] (max. drive), 50%–50% input signals and crossing of output signals	tpo	15 pF 35 pF	1.50/1.40 1.95/1.85	2.23/2.07 2.81/2.66	3.28/3.04 4.06/3.82	ns
Output pad propagation delay[1] (high drive), 50%–50% input signals and crossing of output signals	tpo	15 pF 35 pF	1.69/1.59 2.35/2.25	2.48/2.32 3.35/3.19	3.63/3.38 4.80/4.56	ns
Output pad propagation delay[1] (standard drive), 50%–50% input signals and crossing of output signals	tpo	15 pF 35 pF	2.26/2.15 3.59/3.49	3.24/3.08 4.98/4.82	4.66/4.42 7.00/6.75	ns
Output pad propagation delay[1] (max. drive), 40%–60% input signals and crossing of output signals	tpo	15 pF 35 pF	1.67/1.57 2.11/2.02	2.39/2.24 2.97/2.82	3.45/3.21 4.23/3.99	ns

Table 28. AC Parameters for SDRAM pbijtov18_33_ddr_clk I/O (continued)

Parameter	Symbol	Load Condition	Min. Rise/Fall	Typ.	Max. Rise/Fall	Units
Output pad propagation delay[1] (high drive), 40%–60% input signals and crossing of output signals	tpo	15 pF 35 pF	1.85/1.75 2.52/2.42	2.65/2.49 3.51/3.36	3.79/3.55 4.97/4.72	ns
Output pad propagation delay[1] (standard drive), 40%–60% input signals and crossing of output signals	tpo	15 pF 35 pF	2.42/2.32 3.76/3.66	3.40/3.25 5.15/4.99	4.83/4.59 7.17/6.92	ns
Output enable to output valid delay[1] (max. drive), 50%–50%	tpv	15 pF 35 pF	1.37/1.34 1.77/1.83	2.22/2.02 2.77/2.63	3.53/3.12 4.30/3.92	ns
Output enable to output valid delay[1] (high drive), 50%–50%	tpv	15 pF 35 pF	1.55/1.56 2.15/2.29	2.46/2.30 3.28/3.21	3.87/3.47 5.02/4.67	ns
Output enable to output valid delay[1] (standard drive), 50%–50%	tpv	15 pF 35 pF	2.07/2.18 3.28/3.65	3.20/3.08 4.84/4.90	4.92/4.50 7.21/6.89	ns
Output enable to output valid delay[1] (max. drive), 40%–60%	tpv	15 pF 35 pF	1.46/1.42 1.77/1.81	2.28/2.07 2.71/2.56	3.54/3.13 4.15/3.78	ns
Output enable to output valid delay[1] (high drive), 40%–60%	tpv	15 pF 35 pF	1.60/1.59 2.07/2.18	2.47/2.30 3.12/3.02	3.82/3.41 4.72/4.37	ns
Output enable to output valid delay[1] (standard drive), 40%–60%	tpv	15 pF 35 pF	2.01/2.09 2.96/3.26	3.05/2.91 4.34/4.37	4.64/4.23 6.45/6.13	ns
Output pad slew rate[2] (max. drive)	tps	25 pF 50 pF	1.11/1.20 0.60/0.65	1.74/1.75 0.93/0.95	2.63/2.48 1.39/1.29	V/ns
Output pad slew rate[2] (high drive)	tps	25 pF 50 pF	0.75/0.81 0.40/0.43	1.16/1.18 0.62/0.64	1.76/1.65 094/0.87	V/ns
Output pad slew rate[2] (standard drive)	tps	25 pF 50 pF	0.38/0.41 0.20/0.22	0.59/0.61 0.31/0.32	0.89/0.83 0.47/0.43	V/ns
Output pad dI/dt[3] (max. drive)	tdit	25 pF 50 pF	89 95	202 213	435 456	mA/ns
Output pad dI/dt[3] (high drive)	tdit	25 pF 50 pF	60 63	135 142	288 302	mA/ns
Output pad dI/dt[3] (standard drive)	tdit	25 pF 50 pF	29 31	67 70	144 150	mA/ns
Input pad transition times[4]	trfi	1.0 pF	0.07/0.08	0.11/0.12	0.16/0.20	ns
Input pad propagation delay, 50%–50%[4]	tpi	1.0 pF	0.56/0.69	0.87/1.08	1.37/1.62	ns
Input pad propagation delay, 40%–60%[4]	tpi		1.38/1.51	1.68/1.89	2.18/2.42	

1 Maximum condition for tpr, tpo, tpi, and tpv: wcs model, 1.1 V, I/O 3.0 V, and 105 °C. Minimum condition for tpr, tpo, and tpv: bcs model, 1.3 V, I/O 3.6 V and –40 °C. Input transition time from core is 1 ns (20%–80%).

2 Minimum condition for tps: wcs model, 1.1 V, I/O 3.0 V, and 105 °C. tps is measured between VIL to VIH for rising edge and between VIH to VIL for falling edge.

3 Maximum condition for tdit: bcs model, 1.3 V, I/O 3.6 V, and –40 °C.

4 Maximum condition for tpi and trfi: wcs model, 1.1 V, I/O 3.0 V and 105 °C. Minimum condition for tpi and trfi: bcs model, 1.3 V, I/O 3.6 V and –40 °C. Input transition time from pad is 5 ns (20%–80%).

3.6.3.3 DDR_TYPE = 10 Max Setting I/O AC Parameters and Requirements

Table 29 shows AC parameters for DDR2 I/O.

Table 29. AC Parameters for DDR2 I/O

Parameter	Symbol	Load Condition	Min. Rise/Fall	Typ.	Max. Rise/Fall	Units
Duty cycle	Fduty	—	40	50	60	%
Clock frequency	f	—	—	—	133	MHz
Output pad transition times[1]	tpr	25 pF 50 pF	0.53/0.52 1.01/0.98	0.80/0.72 1.49/1.34	1.19/1.04 2.21/1.90	ns
Output pad propagation delay, 50%–50%[1]	tpo	25 pF 50 pF	0.93/1.25 1.26/1.54	1.56/1.70 2.07/2.19	2.52/2.53 3.29/3.24	ns
Output pad propagation delay, 40%–60%[1]	tpo	25 pF 50 pF	1.01/1.17 1.27/1.53	1.60/1.75 2.00/2.14	2.49/2.52 3.11/3.10	ns
Output enable to output valid delay, 50%–50%[1]	tpv	25 pF 50 pF	1.30/1.19 1.62/1.54	2.17/1.81 2.56/2.29	3.35/2.84 3.35/2.54	ns
Output enable to output valid delay, 40%–60%[1]	tpv	25 pF 50 pF	1.39/1.27 1.64/1.55	2.13/1.86 2.62/2.23	3.38/2.83 4.14/2.38	ns
Output pad slew rate[2]	tps	25 pF 50 pF	0.86/0.98 0.46/054	1.35/1.5 0.72/0.81	2.15/2.19 1.12/1.16	V/ns
Output pad dI/dt[3]	tdit	25 pF 50 pF	65 70	157 167	373 396	mA/ns
Input pad transition times[4]	trfi	1.0 pF	0.07/0.08	0.10/0.12	0.17/0.20	ns
Input pad propagation delay, 50%–50%[4]	tpi	1.0 pF	0.83/0.99	1.23/1.49	1.79/2.04	ns
Input pad propagation delay, 40%–60%[4]	tpi	1.0 pF	1.65/1.81	2.05/2.31	2.60/2.84	ns

1 Maximum condition for tpr, tpo, tpi, and tpv: wcs model, 1.1 V, I/O 1. V, and 105 °C. Minimum condition for tpr, tpo, and tpv: bcs model, 1.3 V, I/O 1.9 V and –40 °C. Input transition time from core is 1 ns (20%–80%).

2 Minimum condition for tps: wcs model, 1.1 V, I/O 1.7 V, and 105 °C. tps is measured between VIL to VIH for rising edge and between VIH to VIL for falling edge.

3 Maximum condition for tdit: bcs model, 1.3 V, I/O 1.9 V, and –40 °C.

4 Maximum condition for tpi and trfi: wcs model, 1.1 V, I/O 1.7 V and 105 °C. Minimum condition for tpi and trfi: bcs model, 1.3 V, I/O 1.9 V and –40 °C. Input transition time from pad is 5 ns (20%–80%).

Table 30 shows AC parameters for DDR2 pbijtov18_33_ddr_clk I/O.

Table 30. AC Parameters for DDR2 pbijtov18_33_ddr_clk I/O

Parameter	Symbol	Load Condition	Min. Rise/Fall	Typ.	Max. Rise/Fall	Units
Duty cycle	Fduty	—	40	50	60	%
Clock frequency	f	—	—	—	133	MHz
Output pad transition times[1]	tpr	25 pF 50 pF	0.53/0.52 1.01/0.98	0.80/0.72 1.49/1.34	1.19/1.04 2.21/1.90	ns
Output pad propagation delay[1], 50%–50% input signals and crossing of output signals	tpo	25 pF 50 pF	1.3/1.21 1.59/1.5	1.97/1.84 2.37/2.24	2.91/2.71 3.48/3.28	ns

Table 30. AC Parameters for DDR2 pbijtov18_33_ddr_clk I/O (continued)

Parameter	Symbol	Load Condition	Min. Rise/Fall	Typ.	Max. Rise/Fall	Units
Output pad propagation delay[1], 40%–60% input signals and crossing of output signals	tpo	25 pF 50 pF	1.47/1.38 1.75/1.67	2.13/2.00 2.54/2.40	3.072/2.87 3.65/3.45	ns
Output enable to output valid delay, 50%–50%[1]	tpv	25 pF 50 pF	1.32/1.28 1.66/1.65	2.11/2.00 2.61/2.50	3.31/3.12 4.06/3.81	ns
Output enable to output valid delay, 40%–60%[1]	tpv	25 pF 50 pF	1.40/1.37 1.67/1.66	2.16/2.06 2.56/2.45	3.30/3.13 3.89/3.67	ns
Output pad slew rate[2]	tps	25 pF 50 pF	0.86/0.98 0.46/054	1.35/1.5 0.72/0.81	2.15/2.19 1.12/1.16	V/ns
Output pad dI/dt[3]	tdit	25 pF 50 pF	72 77	172 183	400 422	mA/ns
Input pad transition times[4]	trfi	1.0 pF	0.07/0.08	0.10/0.12	0.17/0.20	ns
Input pad propagation delay, 50%–50%[4]	tpi	1.0 pF	0.89/0.87	1.41/1.37	2.16/2.07	ns
Input pad propagation delay, 40%–60%[4]	tpi	1.0 pF	1.71/1.69	2.22/2.18	2.98/2.88	ns

1 Maximum condition for tpr, tpo, tpi, and tpv: wcs model, 1.1 V, I/O 1. V, and 105 °C. Minimum condition for tpr, tpo, and tpv: bcs model, 1.3 V, I/O 1.9 V and –40 °C. Input transition time from core is 1 ns (20%–80%).

2 Minimum condition for tps: wcs model, 1.1 V, I/O 1.7 V, and 105 °C. tps is measured between VIL to VIH for rising edge and between VIH to VIL for falling edge.

3 Maximum condition for tdit: bcs model, 1.3 V, I/O 1.9 V, and –40 °C.

4 Maximum condition for tpi and trfi: wcs model, 1.1 V, I/O 1.7 V and 105 °C. Minimum condition for tpi and trfi: bcs model, 1.3 V, I/O 1.9 V and –40 °C. Input transition time from pad is 5 ns (20%–80%).

Table 31 shows the AC requirements for DDR2 I/O.

Table 31. AC Requirements for DDR2 I/O

Parameter[1]	Symbol	Min.	Max.	Units
AC input logic high	VIH(ac)	OVDD/2 + 0.25	OVDD + 0.3	V
AC input logic low	VIL(ac)	–0.3	OVDD/2 – 0.25	V
AC differential input voltage[2]	Vid(ac)	0.5	OVDD + 0.6	V
AC differential cross point voltage for input[3]	Vix(ac)	OVDD/2–0.175	OVDD/2 + 0.175	V
AC differential cross point voltage for output[4]	Vox(ac)	OVDD/2–0.125	OVDD/2 + 0.125	V

1 The Jedec SSTL_18 specification (JESD8-15a) for an SSTL interface for class II operation supersedes any specification in this document.

2 Vid(ac) specifies the input differential voltage |Vtr–Vcp| required for switching, where Vtr is the “true” input signal and Vcp is the “complementary” input signal. The minimum value is equal to Vih(ac)–Vil(ac)

3 The typical value of Vix(ac) is expected to be about 0.5 × OVDD. and Vix(ac) is expected to track variation of OVDD. Vix(ac) indicates the voltage at which differential input signal must cross.

4 The typical value of Vox(ac) is expected to be about 0.5 × OVDD and Vox(ac) is expected to track variation in OVDD. Vox(ac) indicates the voltage at which differential output signal must cross. Cload = 25 pF.

3.7 Module Timing and Electrical Parameters

This section contains the timing and electrical parameters for i.MX25 modules.

3.7.1 1-Wire Timing Parameters

Figure 7 shows the reset and presence pulses (RPP) timing for 1-Wire.

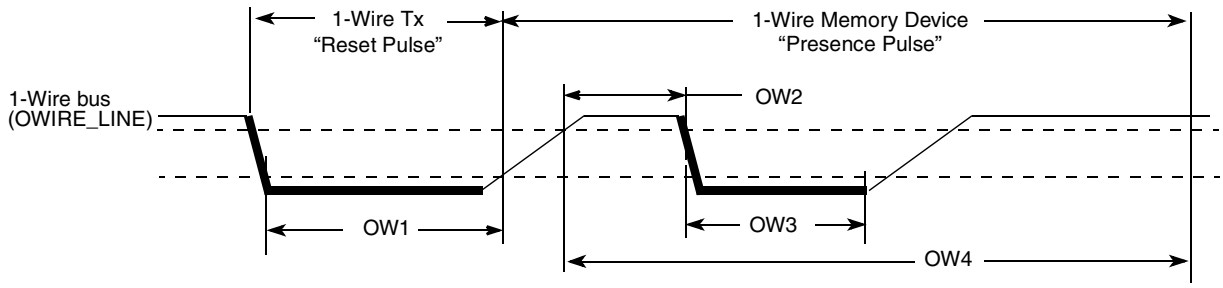

Figure 7. 1-Wire RPP Timing Diagram

Table 32 lists the RPP timing parameters.

Table 32. RPP Sequence Delay Comparisons Timing Parameters

ID	Parameters	Symbol	Min.	Typ.	Max.	Units
OW1	Reset Time Low	t_{RSTL}	480	511	—	µs
OW2	Presence Detect High	t_{PDH}	15	—	60	µs
OW3	Presence Detect Low	t_{PDL}	60	—	240	µs
OW4	Reset Time High	t_{RSTH}	480	512	—	µs

Figure 8 shows write 0 sequence timing, and Table 33 describes the timing parameters (OW5–OW6) that are shown in the figure.

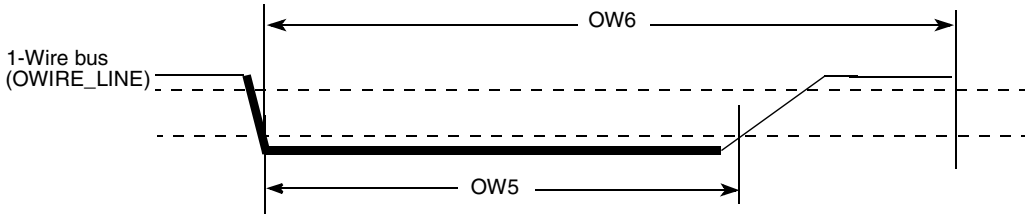

Figure 8. Write 0 Sequence Timing Diagram

Table 33. WR0 Sequence Timing Parameters

ID	Parameter	Symbol	Min.	Typ.	Max.	Units
OW5	Write 0 Low Time	t_{WR0_low}	60	100	120	µs
OW6	Transmission Time Slot	t_{SLOT}	OW5	117	120	µs

Figure 9 and Figure 10 show write 1 and read sequence timing, respectively. Table 34 describes the timing parameters (OW7–OW8) that are shown in the figure.

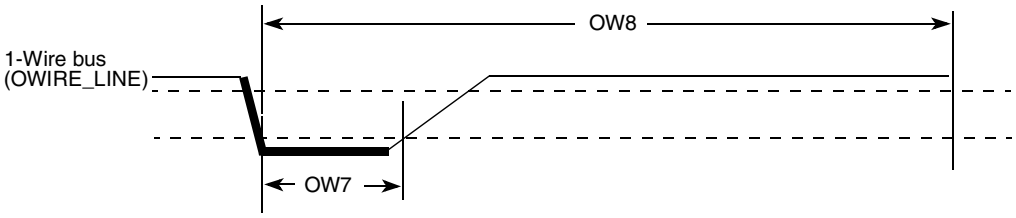

Figure 9. Write 1 Sequence Timing Diagram

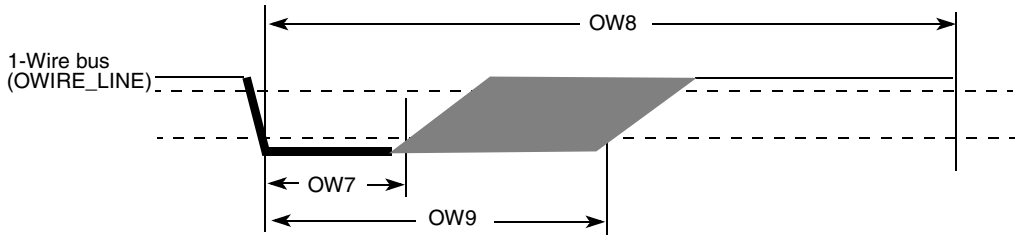

Figure 10. Read Sequence Timing Diagram

Table 34. WR1 /RD Timing Parameters

ID	Parameter	Symbol	Min.	Typ.	Max.	Units
OW7	Write 1 / read low time	t_{LOW1}	1	5	15	µs
OW8	Transmission time slot	t_{SLOT}	60	117	120	µs
OW9	Release time	$t_{RELEASE}$	15	—	45	µs

3.7.2 ATA Timing Parameters

Table 35 shows parameters used to specify the ATA timing. These parameters depend on the implementation of the ATA interface on silicon, the bus buffer used, the cable delay and cable skew.

Table 35. Timing Parameters

Name	Description	Value/Contributing Factor
T	Bus clock period	Peripheral clock frequency
ti_ds	Set-up time **ata_data** to **ata_iordy** edge (UDMA-in only) UDMA0 UDMA1 UDMA2,UDMA3 UDMA4 UDMA5	 15 ns 10 ns 7 ns 5 ns 4 ns
ti_dh	Hold time ata_iordy edge to ata_data (UDMA-in only) UDMA0,UDMA1,UDMA2,UDMA3,UDMA4 UDMA5	 5.0 ns 4.6 ns
tco	Propagation delay bus clock L-to-H to ata_cs0, ata_cs1, ata_da2, ata_da1, ata_da0, ata_dior, ata_diow, ata_dmack, ata_data, ata_buffer_en	12.0 ns
tsu	Set-up time **ata_data** to bus clock L-to-H	8.5 ns
tsui	Set-up time **ata_iordy** to bus clock H-to-L	8.5 ns
thi	Hold time **ata_iordy** to bus clock H-to-L	2.5 ns
tskew1	Maximum difference in propagation delay bus clock L-to-H to any of the following signals **ata_cs0, ata_cs1, ata_da2, ata_da1, ata_da0, ata_dior, ata_diow, ata_dmack, ata_data** (write), **ata_buffer_en**	7 ns
tskew2	Maximum difference in buffer propagation delay for any of the following signals **ata_cs0, ata_cs1, ata_da2, ata_da1, ata_da0, ata_dior, ata_diow, ata_dmack, ata_data** (write), **ata_buffer_en**	Transceiver
tskew3	Maximum difference in buffer propagation delay for any of the following signals **ata_iordy, ata_data** (read)	Transceiver
tbuf	Maximum buffer propagation delay	Transceiver
tcable1	cable propagation delay for **ata_data**	Cable
tcable2	cable propagation delay for control signals **ata_dior**, **ata_diow**, **ata_iordy**, **ata_dmack**	Cable
tskew4	Maximum difference in cable propagation delay between **ata_iordy** and **ata_data** (read)	Cable
tskew5	Maximum difference in cable propagation delay between (**ata_dior**, **ata_diow**, **ata_dmack**) and **ata_cs0**, **ata_cs1**, **ata_da2**, **ata_da1**, **ata_da0**, **ata_data**(write)	Cable
tskew6	Maximum difference in cable propagation delay without accounting for ground bounce	Cable

3.7.2.1 PIO Mode Timing Parameters

Figure 11 shows a timing diagram for PIO read mode.

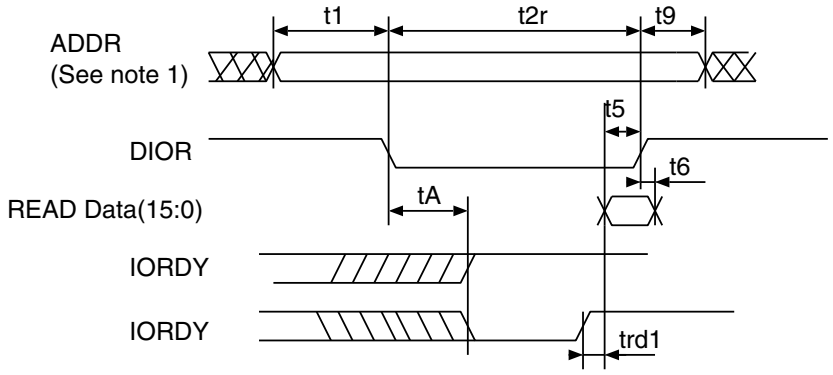

Figure 11. PIO Read Mode Timing

To meet PIO read mode timing requirements, a number of timing parameters must be controlled. Table 36 shows timing parameters and their determining relations, and indicates parameters that can be adjusted to meet required conditions.

Table 36. Timing Parameters for PIO Read Mode

ATA Parameter	PIO Read Mode Timing Parameter[1]	Relation	Adjustable Parameter
t1	t1	t1(min.) = time_1 × T – (tskew1 + tskew2 + tskew5)	time_1
t2	t2r	t2(min.) = time_2r × T – (tskew1 + tskew2 + tskew5)	time_2r
t9	t9	t9(min.) = time_9 × T – (tskew1 + tskew2 + tskew6)	time_9
t5	t5	t5(min.) = tco + tsu + tbuf + tbuf + tcable1 + tcable2	If not met, increase time_2
t6	t6	0	—
tA	tA	tA(min.) = (1.5 + time_ax) × T – (tco + tsui + tcable2 + tcable2 + 2 × tbuf)	time_ax
trd	trd1	trd1(max.) = (–trd) + (tskew3 + tskew4) trd1(min.) = (time_pio_rdx – 0.5) × T – (tsu + thi) (time_pio_rdx – 0.5) × T > tsu + thi + tskew3 + tskew4	time_pio_rdx
t0	—	t0(min.) = (time_1 + time_2 + time_9) × T	time_1, time_2r, time_9

[1] See Figure 11.

Figure 12 gives timing waveforms for PIO write mode.

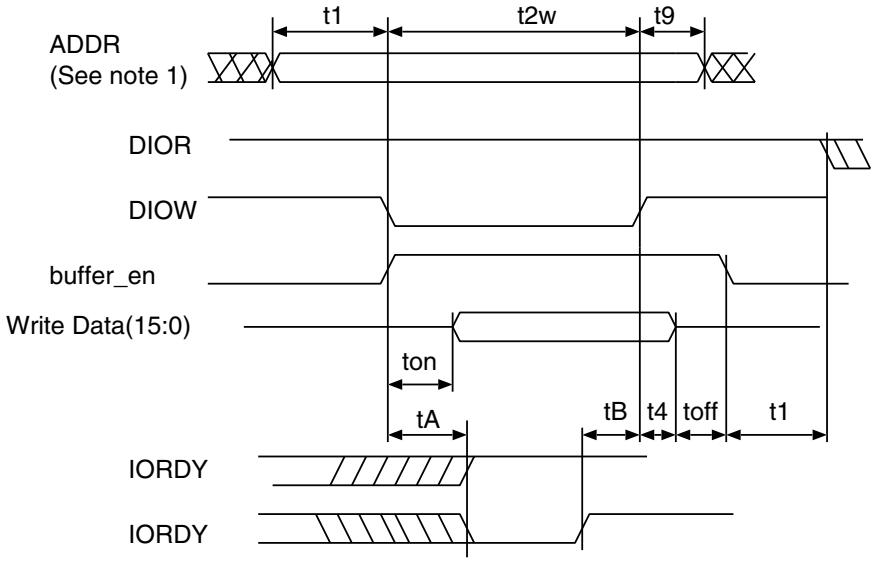

Figure 12. PIO Write Mode Timing

To meet PIO write mode timing requirements, a number of timing parameters must be controlled. Table 37 shows timing parameters and their determining relations, and indicates parameters that can be adjusted to meet required conditions.

Table 37. Timing Parameters for PIO Write Mode

ATA Parameter	PIO Write Mode Timing Parameter[1]	Relation	Adjustable Parameter(s)
t1	t1	t1(min.) = time_1 × T – (tskew1 + tskew2 + tskew5)	time_1
t2	t2w	t2(min.) = time_2w × T – (tskew1 + tskew2 + tskew5)	time_2w
t9	t9	t9(min.) = time_9 × T – (tskew1 + tskew2 + tskew6)	time_9
t3	—	t3(min.) = (time_2w – time_on) × T – (tskew1 + tskew2 +tskew5)	if not met, increase time_2w
t4	t4	t4(min.) = time_4 × T – tskew1	time_4
tA	tA	tA = (1.5 + time_ax) × T – (tco + tsui + tcable2 + tcable2 + 2 × tbuf)	time_ax
t0	—	t0(min.) = (time_1 + time_2 + time_9) × T	time_1, time_2r, time_9
—	—	Avoid bus contention when switching buffer on by making ton long enough	—
—	—	Avoid bus contention when switching buffer off by making toff long enough	—

[1] See Figure 12.

3.7.2.2 Multiword DMA (MDMA) Mode Timing

Figure 13 and Figure 14 show the timing for MDMA read and write modes, respectively.

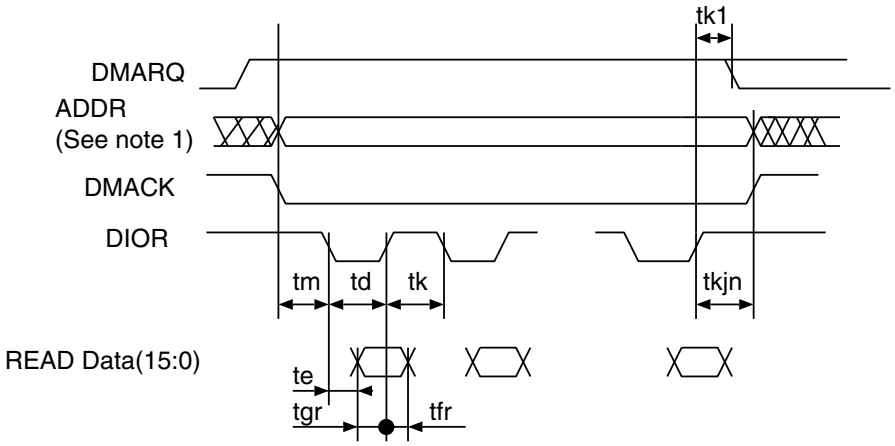

Figure 13. MDMA Read Mode Timing

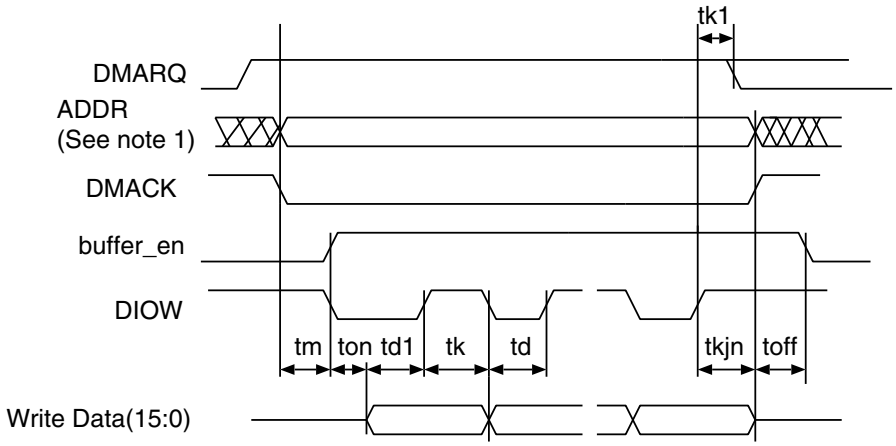

Figure 14. MDMA Write Mode Timing

To meet timing requirements, a number of timing parameters must be controlled. See Table 38 for details on timing parameters for MDMA read and write modes.

Table 38. Timing Parameters for MDMA Read and Write Modes

ATA Parameter	MDMA Read[1] and Write[2] Timing Parameters	Relation	Adjustable Parameter(s)
tm, ti	tm	tm(min.) = ti(min.) = time_m × T – (tskew1 + tskew2 + tskew5)	time_m
td	td, td1	td1(min.) = td(min.) = time_d × T – (tskew1 + tskew2 + tskew6)	time_d
tk	tk	tk(min.) = time_k × T – (tskew1 + tskew2 + tskew6)	time_k
t0	—	t0(min.) = (time_d + time_k) × T	time_d, time_k
tg(read)	tgr	tgr(min.–read) = tco + tsu + tbuf + tbuf + tcable1 + tcable2 tgr(min.–drive) = td – te(drive)	time_d
tf(read)	tfr	tfr(min.–drive) =0 k	—
tg(write)	—	tg(min.–write) = time_d × T –(tskew1 + tskew2 + tskew5)	time_d
tf(write)	—	tf(min.–write) = time_k × T – (tskew1 + tskew2 + tskew6)	time_k
tL	—	tL(max.) = (time_d + time_k–2) × T – (tsu + tco + 2 × tbuf + 2 × tcable2)	time_d, time_k[3]
tn, tj	tkjn	tn= tj= tkjn = (max.(time_k,. time_jn) × T – (tskew1 + tskew2 + tskew6)	time_jn
—	ton toff	ton = time_on × T – tskew1 toff = time_off × T – tskew1	—

1 See Figure 13.

2 See Figure 14.

3 tk1 in the UDMA figures equals (tk –2 × T).

3.7.2.3 Ultra DMA (UDMA) Mode Timing

UDMA mode timing is more complicated than PIO mode or MDMA mode. In this section, timing diagrams for UDMA in- and out-transfers are provided.

3.7.2.3.1 UDMA In-Transfer Timing

Figure 15 shows the timing for UDMA in-transfer start.

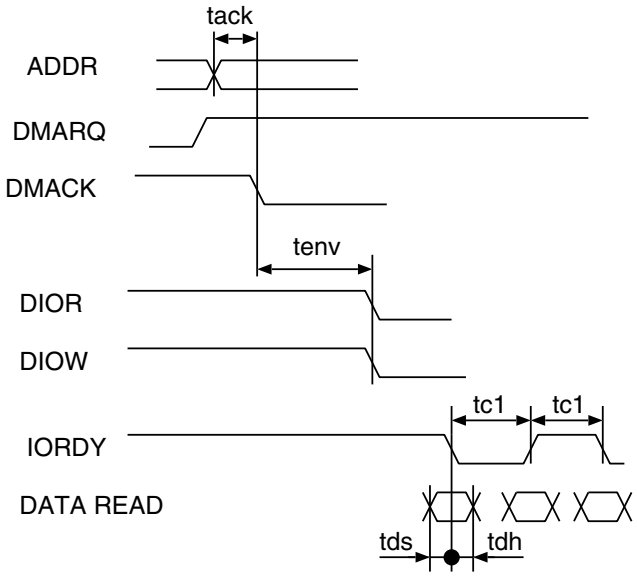

Figure 15. Timing for UDMA In-Transfer Start

Figure 16 shows the timing for host-terminated UDMA in-transfer.

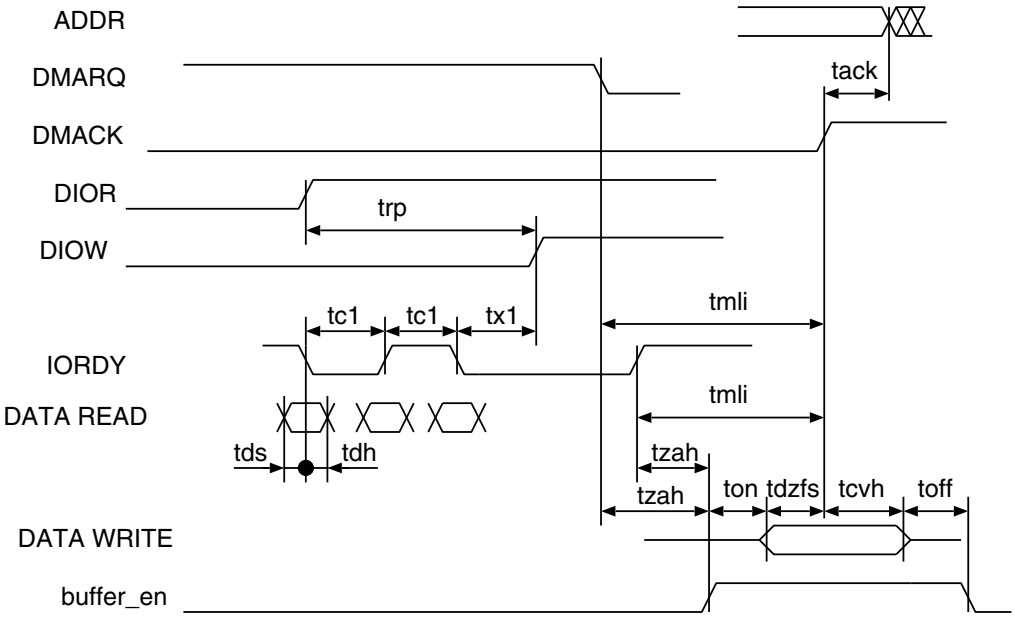

Figure 16. Timing for Host-Terminated UDMA In-Transfer

Figure 17 shows timing for device-terminated UDMA in-transfer.

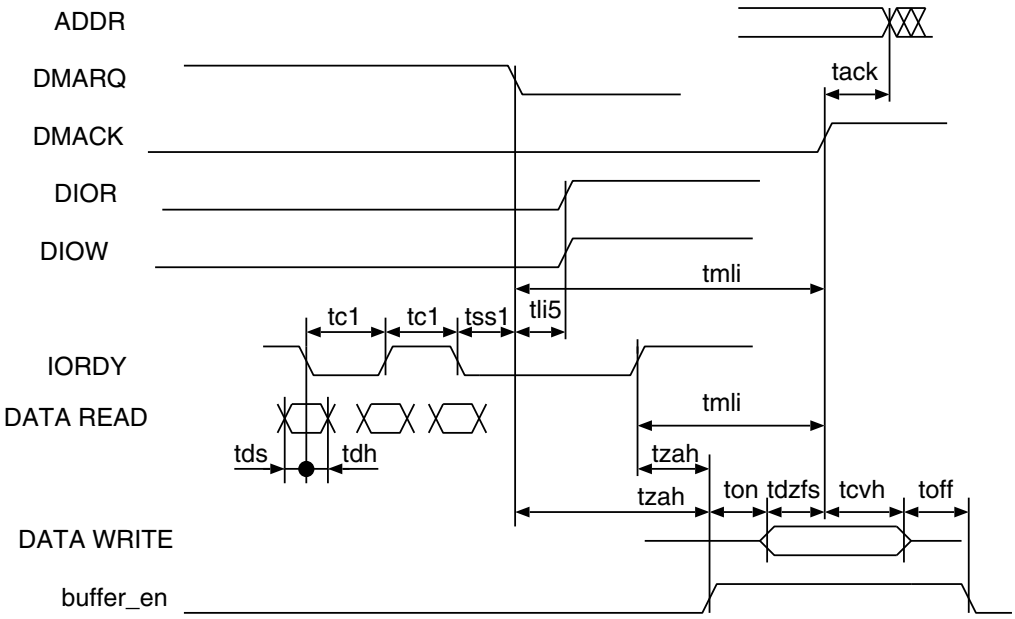

Figure 17. Timing for Device-Terminated UDMA Transfer

Timing parameters for UDMA in-burst are listed in Table 39.

Table 39. Timing Parameters for UDMA In-Burst

ATA Parameter	Spec. Parameter	Value	Required Conditions
tack	tack	tack(min.) = (time_ack × T) – (tskew1 + tskew2)	time_ack
tenv	tenv	tenv(min.) = (time_env × T) – (tskew1 + tskew2) tenv(max.) = (time_env × T) + (tskew1 + tskew2)	time_env
tds	tds1	tds – (tskew3) – ti_ds > 0	tskew3, ti_ds, ti_dh should be low enough
tdh	tdh1	tdh – (tskew3) –ti_dh > 0	
tcyc	tc1	(tcyc – tskew) > T	T big enough
trp	trp	trp(min.) = time_rp × T – (tskew1 + tskew2 + tskew6)	time_rp
—	tx1[1]	(time_rp × T) – (tco + tsu + 3T + 2 × tbuf + 2 × tcable2) > trfs (drive)	time_rp
tmli	tmli1	tmli1(min.) = (time_mlix + 0.4) × T	time_mlix
tzah	tzah	tzah(min.) = (time_zah + 0.4) × T	time_zah
tdzfs	tdzfs	tdzfs = (time_dzfs × T) – (tskew1 + tskew2)	time_dzfs
tcvh	tcvh	tcvh = (time_cvh × T) – (tskew1 + tskew2)	time_cvh
—	ton toff	ton = time_on × T – tskew1 toff = time_off × T – tskew1	—

[1] There is a special timing requirement in the ATA host that requires the internal DIOW to go only high three clocks after the last active edge on the DSTROBE signal. The equation given on this line tries to capture this constraint.

Make t_{on} and t_{off} big enough to avoid bus contention.

3.7.2.4 UDMA Out-Transfer Timing

Figure 18 shows the timing for start of UDMA out-transfer.

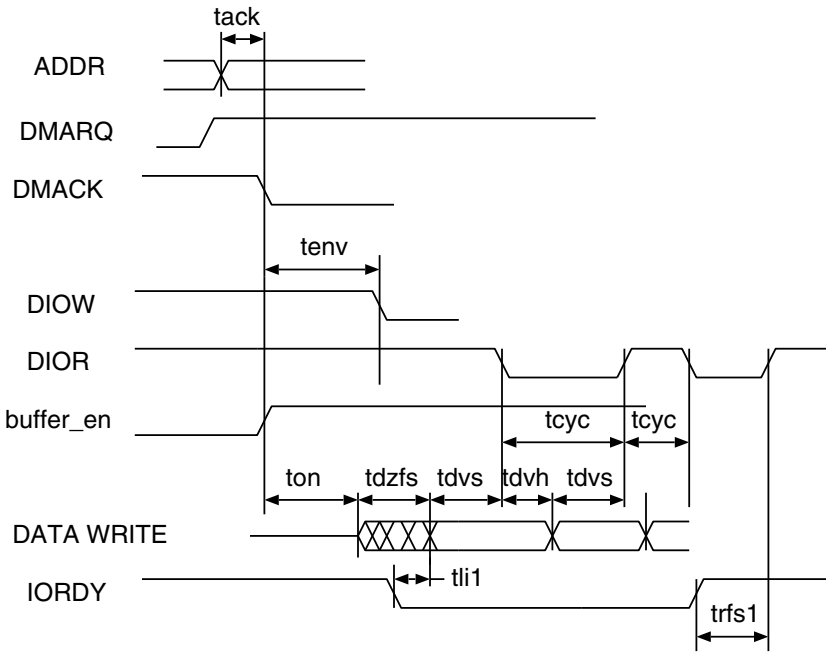

Figure 18. Timing for UDMA Out-Transfer Start

Figure 19 shows timing for host-terminated UDMA out-transfer.

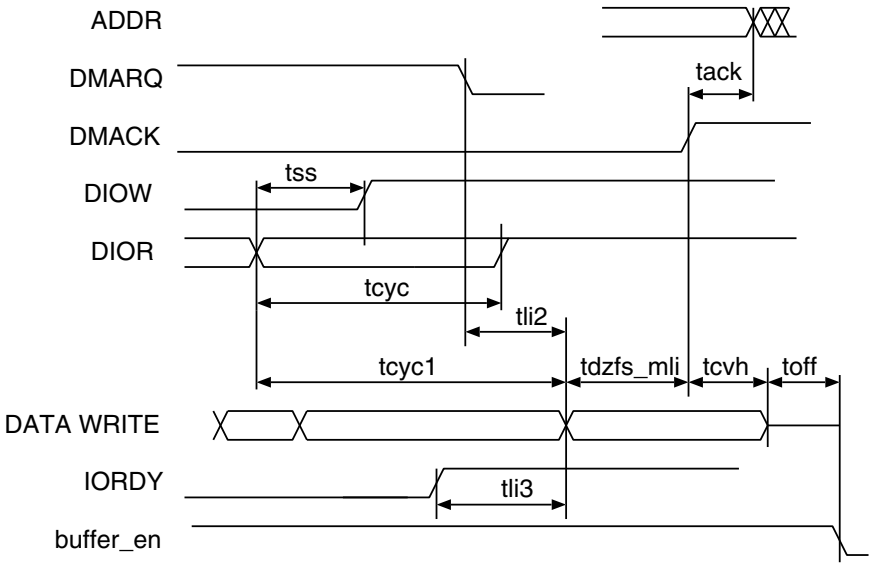

Figure 19. Timing for Host-Terminated UDMA Out-Transfer

Timing parameters for UDMA out-bursts are listed in Table 40.

Table 40. Timing Parameters UDMA Out-Bursts

ATA Parameter	Spec Parameter	Value	How to Meet?
tack	tack	tack(min.) = (time_ack × T) – (tskew1 + tskew2)	time_ack
tenv	tenv	tenv(min.) = (time_env × T) – (tskew1 + tskew2) tenv(max.) = (time_env × T) + (tskew1 + tskew2)	time_env
tdvs	tdvs	tdvs = (time_dvs × T) – (tskew1 + tskew2)	time_dvs
tdvh	tdvh	tdvs = (time_dvh × T) – (tskew1 + tskew2)	time_dvh
tcyc	tcyc	tcyc = time_cyc × T – (tskew1 + tskew2)	time_cyc
t2cyc	—	t2cyc = time_cyc × 2 × T	time_cyc
trfs1	trfs	trfs = 1.6 × T + tsui + tco + tbuf + tbuf	—
—	tdzfs	tdzfs = time_dzfs × T – (tskew1)	time_dzfs
tss	tss	tss = time_ss × T – (tskew1 + tskew2)	time_ss
tmli	tdzfs_mli	tdzfs_mli =max.(time_dzfs, time_mli) × T – (tskew1 + tskew2)	—
tli	tli1	tli1 > 0	—
tli	tli2	tli2 > 0	—
tli	tli3	tli3 > 0	—
tcvh	tcvh	tcvh = (time_cvh × T) – (tskew1 + tskew2)	time_cvh
—	ton toff	ton = time_on × T – tskew1 toff = time_off × T – tskew1	—

3.7.3 Digital Audio Mux (AUDMUX) Timing

The AUDMUX provides a programmable interconnect logic for voice, audio, and data routing between internal serial interfaces (SSI and SAP) and external serial interfaces (audio and voice codecs). The AC timing of AUDMUX external pins is governed by the SSI modules. For more information, see Section 3.7.17, “Synchronous Serial Interface (SSI) Timing.”

3.7.4 CMOS Sensor Interface (CSI) Timing

The CSI enables the chip to connect directly to external CMOS image sensors, which are classified as dumb or smart as follows:

- Dumb sensors only support traditional sensor timing (vertical sync (VSYNC) and horizontal sync (HSYNC)) and output-only Bayer and statistics data.
- Smart sensors support CCIR656 video decoder formats and perform additional processing of the image (for example, image compression, image pre-filtering, and various data output formats).

The following subsections describe the CSI timing in gated and ungated clock modes.

3.7.4.1 Gated Clock Mode Timing

Figure 20 and Figure 21 shows the gated clock mode timings for CSI, and Table 41 describes the timing parameters (P1–P7) shown in the figures. A frame starts with a rising/falling edge on VSYNC, then HSYNC is asserted and holds for the entire line. The pixel clock is valid as long as HSYNC is asserted.

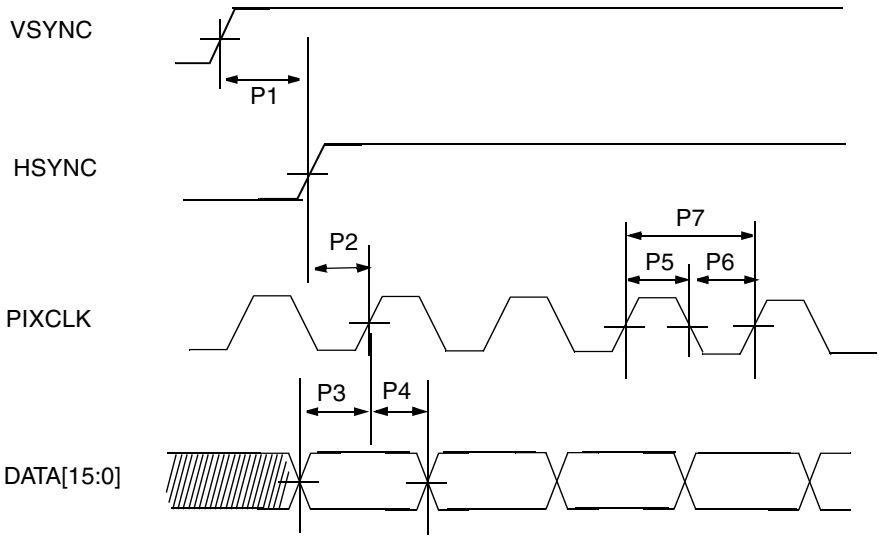

Figure 20. CSI Gated Clock Mode—Sensor Data at Falling Edge, Latch Data at Rising Edge

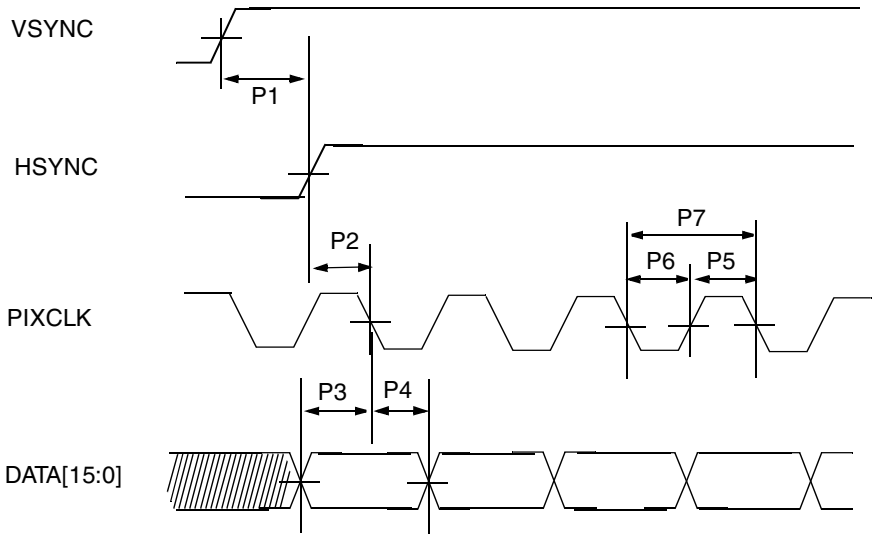

Figure 21. CSI Gated Clock Mode—Sensor Data at Rising Edge, Latch Data at Falling Edge

Table 41. CSI Gated Clock Mode Timing Parameters

ID	Parameter	Symbol	Min.	Max.	Units
P1	CSI VSYNC to HSYNC time	tV2H	67.5	—	ns
P2	CSI HSYNC setup time	tHsu	1	—	ns
P3	CSI DATA setup time	tDsu	1	—	ns
P4	CSI DATA hold time	tDh	1.2	—	ns
P5	CSI pixel clock high time	tCLKh	10	—	ns
P6	CSI pixel clock low time	tCLKl	10	—	ns
P7	CSI pixel clock frequency	fCLK	—	48 ± 10%	MHz

3.7.4.2 Ungated Clock Mode Timing

Figure 22 shows the ungated clock mode timings of CSI, and Table 42 describes the timing parameters (P1–P6) that are shown in the figure. In ungated mode the VSYNC and PIXCLK signals are used, and the HSYNC signal is ignored.

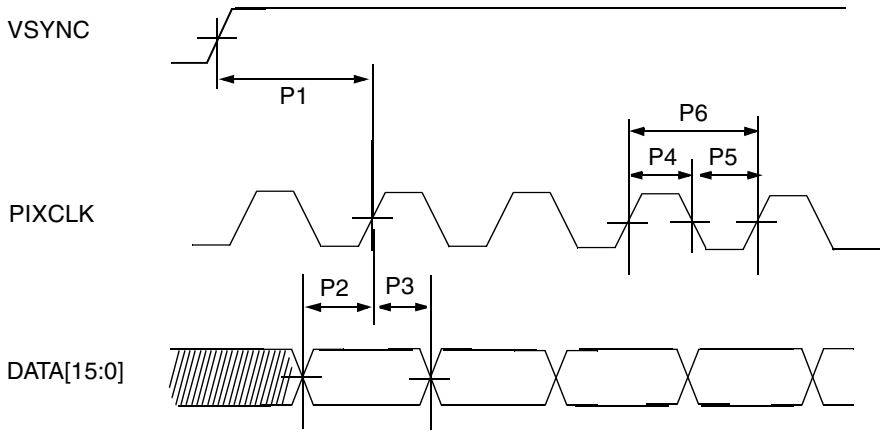

Figure 22. CSI Ungated Clock Mode—Sensor Data at Falling Edge, Latch Data at Rising Edge

Table 42. CSI Ungated Clock Mode Timing Parameters

ID	Parameter	Symbol	Min.	Max.	Units
P1	CSI VSYNC to pixel clock time	tVSYNC	67.5	—	ns
P2	CSI DATA setup time	tDsu	1	—	ns
P3	CSI DATA hold time	tDh	1.2	—	ns
P4	CSI pixel clock high time	tCLKh	10	—	ns
P5	CSI pixel clock low time	tCLKl	10	—	ns
P6	CSI pixel clock frequency	fCLK	—	48 ± 10%	MHz

3.7.5 Configurable Serial Peripheral Interface (CSPI) Timing

Figure 23 and Figure 24 provide CSPI master and slave mode timing diagrams, respectively. Table 43 describes the timing parameters (t1–t14) that are shown in the figures. The values shown in timing diagrams were tested using a worst-case core voltage of 1.1 V, slow pad voltage of 2.68 V, and fast pad voltage of 1.65 V.

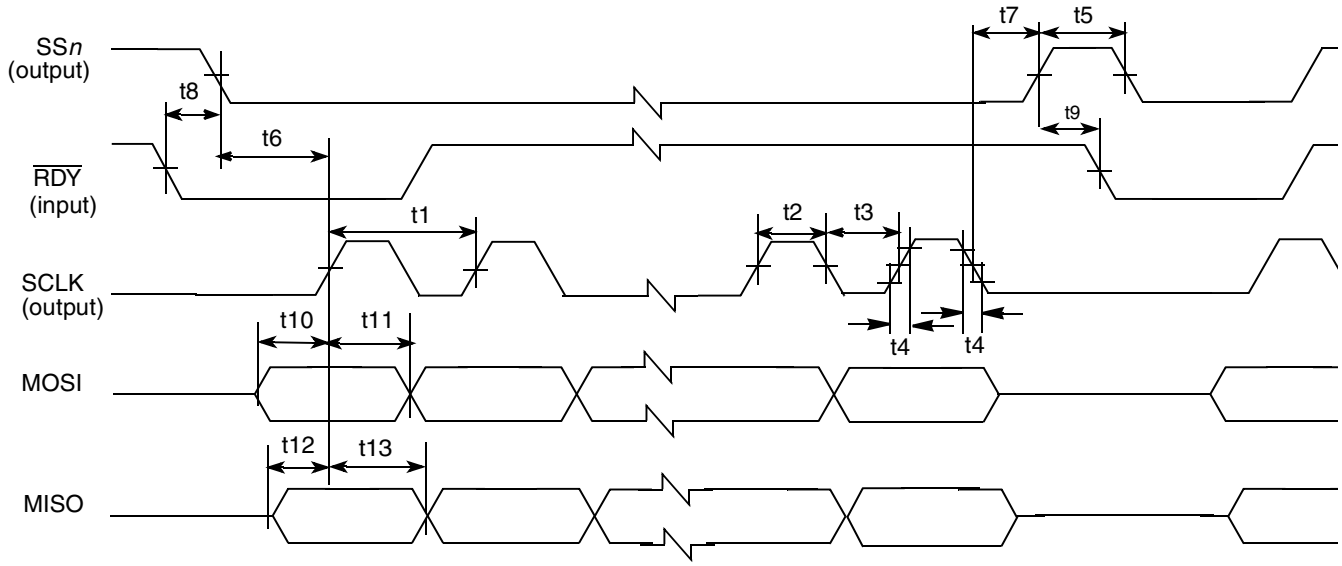

Figure 23. CSPI Master Mode Timing Diagram

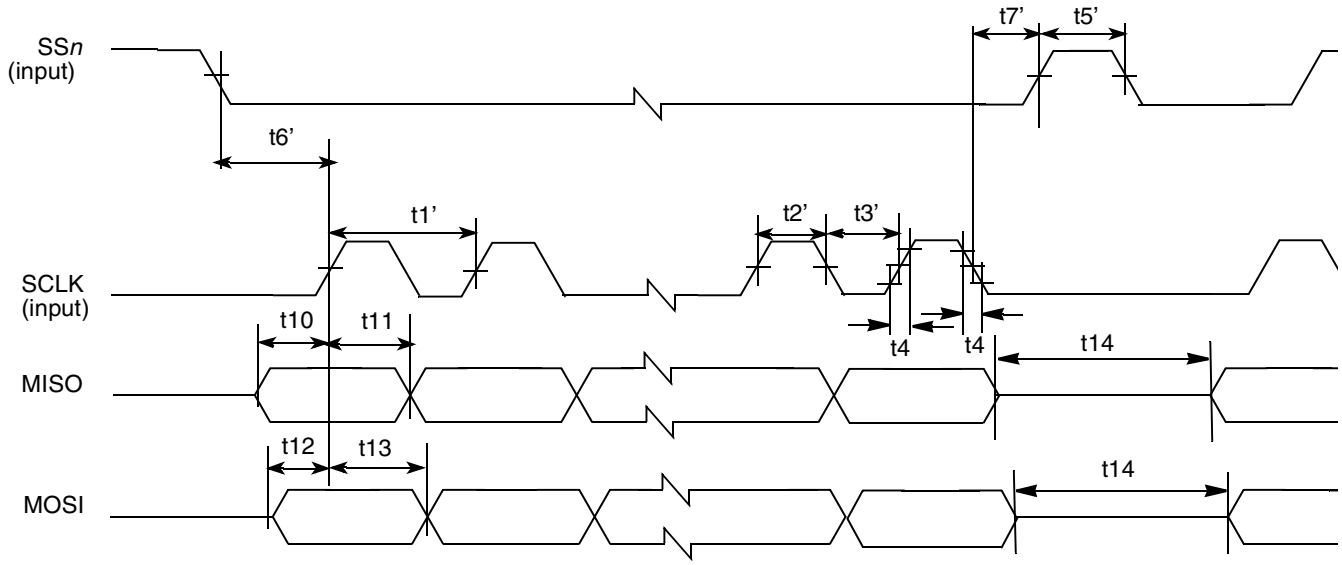

Figure 24. CSPI Slave Mode Timing Diagram

Table 43. CSPI Interface Timing Parameters

ID	Parameter Description	Symbol	Minimum	Maximum	Units
t1	CSPI master SCLK cycle time	t_{clko}	60.2	—	ns
t2	CSPI master SCLK high time	t_{clkoH}	22.65	—	ns
t3	CSPI master SCLK low time	t_{clkoL}	22.47	—	ns
t1’	CSPI slave SCLK cycle time	t_{clki}	60.2	—	ns
t2’	CSPI slave SCLK high time	t_{clkiH}	30.1	—	ns
t3’	CSPI slave SCLK low time	t_{clkiL}	30.1	—	ns
t4	CSPI SCLK transition time	t_{pr}[1]	2.6	8.5	ns
t5	SS*n* output pulse width	t_{Wsso}	$2T_{sclk}$[2] $+T_{wait}$[3]	—	—
t5’	SS*n* input pulse width	t_{Wssi}	T_{per}[4]	—	—
t6	SS*n* output asserted to first SCLK edge (SS output setup time)	t_{Ssso}	$3T_{sclk}$	—	—
t6’	SS*n* input asserted to first SCLK edge (SS input setup time)	t_{Sssi}	T_{per}	—	—
t7	CSPI master: Last SCLK edge to SS*n* negated (SS output hold time)	t_{Hsso}	$2T_{sclk}$	—	—
t7’	CSPI slave: Last SCLK edge to SS*n* negated (SS input hold time)	t_{Hssi}	30	—	ns
t8	CSPI master: CSPI1_RDY low to SS*n* asserted (CSPI1_RDY setup time)	t_{Srdy}	$2T_{per}$	$5T_{per}$	—
t9	CSPI master: SS*n* negated to CSPI1_RDY low	t_{Hrdy}	0	—	ns
t10	Output data setup time	t_{Sdatao}	(t_{clkoL} or t_{clkoH} or t_{clkiL} or t_{clkiH}) – T_{ipg}[5]	—	—
t11	Output data hold time	t_{Hdatao}	t_{clkoL} or t_{clkoH} or t_{clkiL} or t_{clkiH}	—	—
t12	Input data setup time	t_{Sdatai}	T_{ipg} + 0.5	—	ns
t13	Input data hold time	t_{Hdatai}	0	—	ns
t14	Pause between data word	t_{pause}	0	—	ns

1 The output SCLK transition time is tested with 25 pF drive.
2 T_{sclk} = CSPI clock period
3 T_{wait} = Wait time, as specified in the sample period control register
4 T_{per} = CSPI reference baud rate clock period (PERCLK2)
5 T_{ipg} = CSPI main clock IPG_CLOCK period

3.7.6 External Memory Interface (EMI) Timing

The EMI module includes the enhanced SDRAM/LPDDR memory controller (ESDCTL), NAND Flash controller (NFC), and wireless external interface module (WEIM). The following subsections give timing information for these submodules.

3.7.6.1 ESDCTL Electrical Specifications

3.7.6.1.1 SDRAM Memory Controller

The following diagrams and tables specify the timings related to the SDRAMC module which interfaces SDRAM.

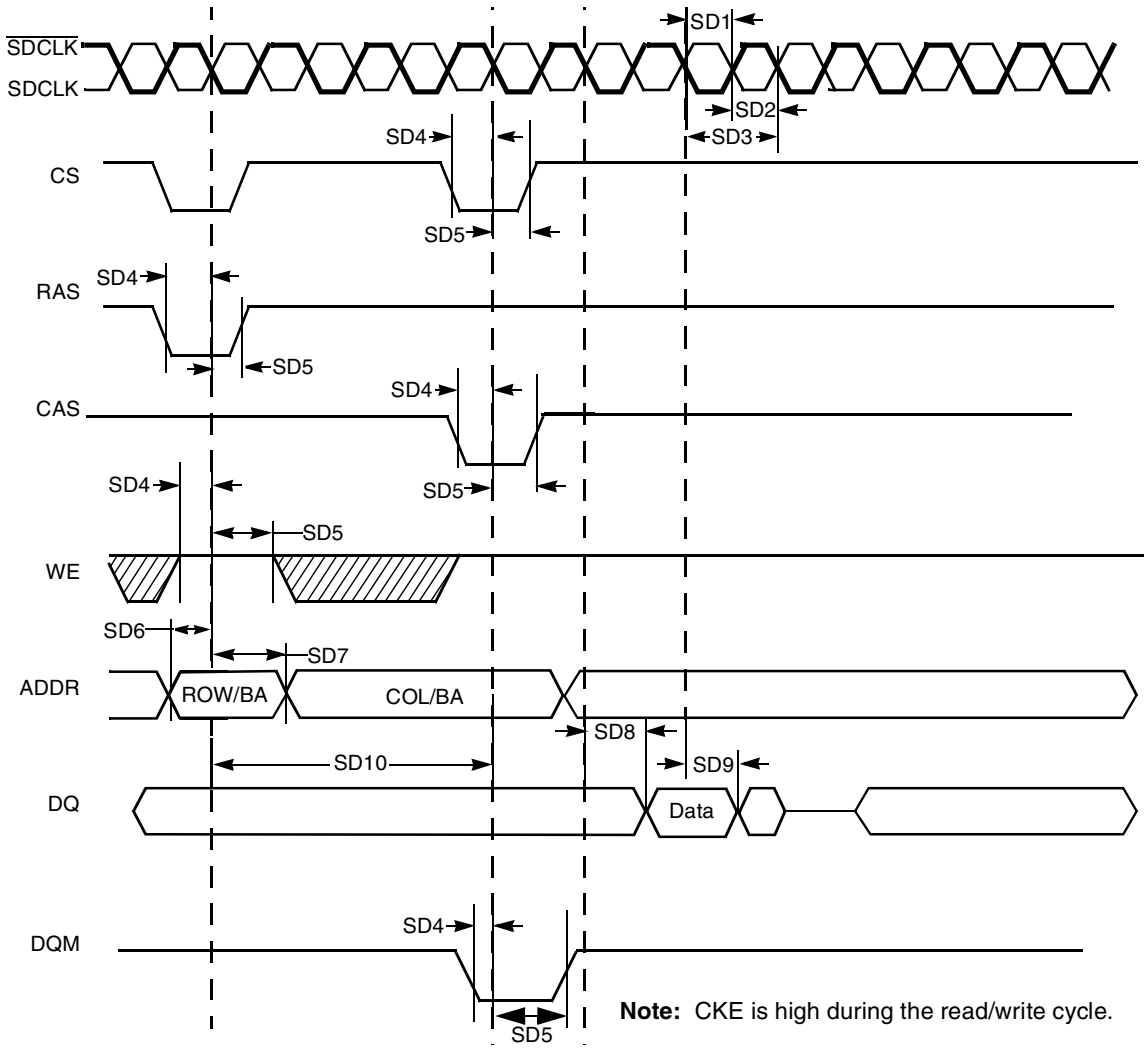

Figure 25. SDRAM Read Cycle Timing Diagram

Table 44. DDR/SDR SDRAM Read Cycle Timing Parameters

ID	Parameter	Symbol	Min.	Max.	Unit
SD1	SDRAM clock high-level width[1]	tCH	3.4	4.1	ns
SD2	SDRAM clock low-level width[1]	tCL	3.4	4.1	ns
SD3	SDRAM clock cycle time	tCK	7.5	—	ns
SD4	CS, RAS, CAS, WE, DQM, CKE setup time	tCMS	2.0	—	ns
SD5	CS, RAS, CAS, WE, DQM, CKE hold time	tCMH	1.8	—	ns

Table 44. DDR/SDR SDRAM Read Cycle Timing Parameters (continued)

ID	Parameter	Symbol	Min.	Max.	Unit
SD6	Address setup time	tAS	2.0	—	ns
SD7	Address hold time	tAH	1.8	—	ns
SD8	SDRAM access time	tAC	—	6.47	ns
SD9	Data out hold time[2]	tOH	1.2	—	ns
SD10	Active to read/write command period	tRC	10	—	clock

[1] SD1 + SD2 does not exceed 7.5 ns for 133 MHz.

[2] Timing parameters are relevant only to SDR SDRAM. For the specific DDR SDRAM data related timing parameters, see Table 48 and Table 49.

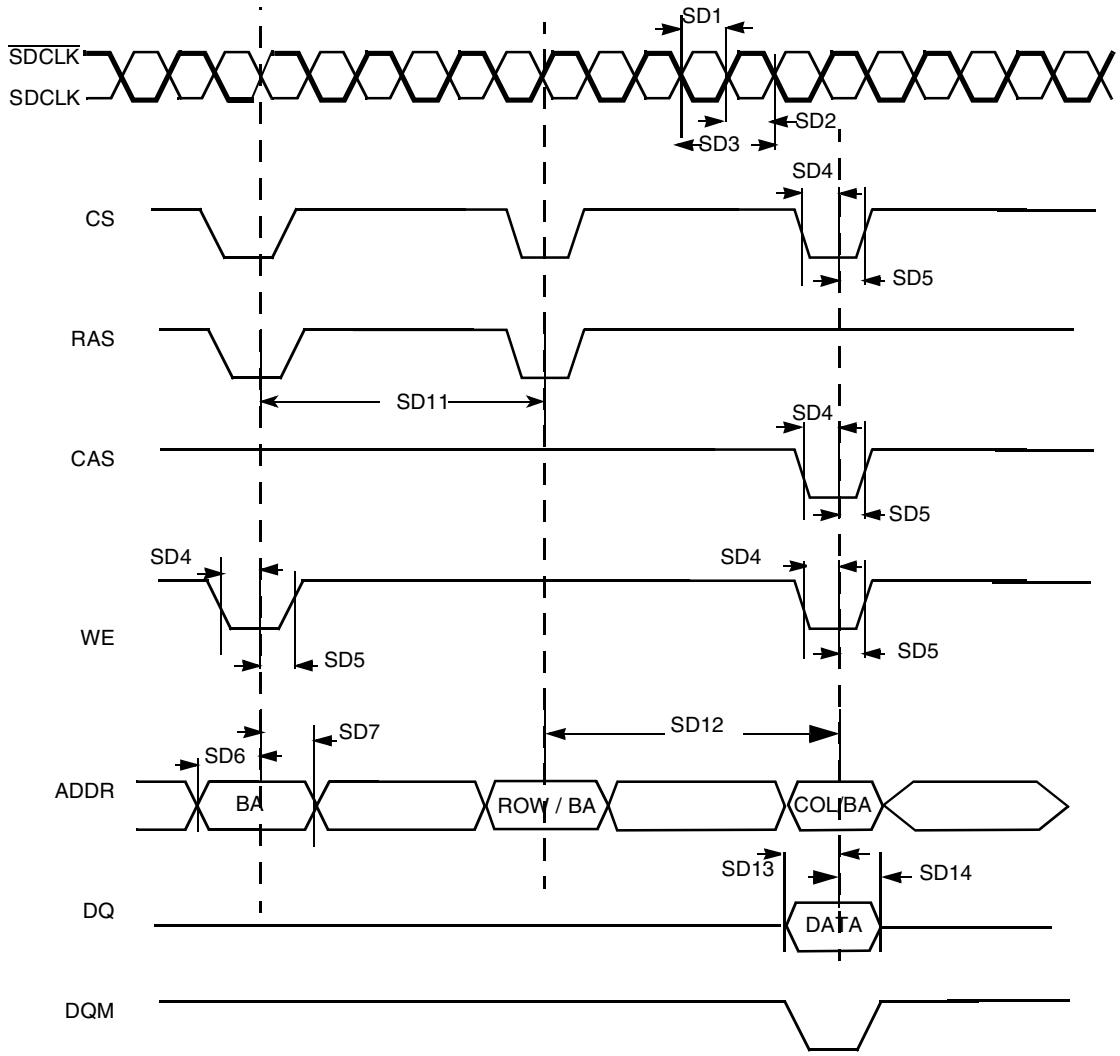

Figure 26. SDR SDRAM Write Cycle Timing Diagram

Table 45. SDR SDRAM Write Timing Parameters

ID	Parameter	Symbol	Min.	Max.	Unit
SD1	SDRAM clock high-level width	tCH	3.4	4.1	ns
SD2	SDRAM clock low-level width	tCL	3.4	4.1	ns
SD3	SDRAM clock cycle time	tCK	7.5	—	ns
SD4	CS, RAS, CAS, WE, DQM, CKE setup time	tCMS	2.0	—	ns
SD5	CS, RAS, CAS, WE, DQM, CKE hold time	tCMH	1.8	—	ns
SD6	Address setup time	tAS	2.0	—	ns
SD7	Address hold time	tAH	1.8	—	ns
SD11	Precharge cycle period[1]	tRP	1	4	clock
SD12	Active to read/write command delay[1]	tRCD	1	8	clock
SD13	Data setup time	tDS	2.0	—	ns
SD14	Data hold time	tDH	1.3	—	ns

[1] SD11 and SD12 are determined by SDRAM controller register settings.

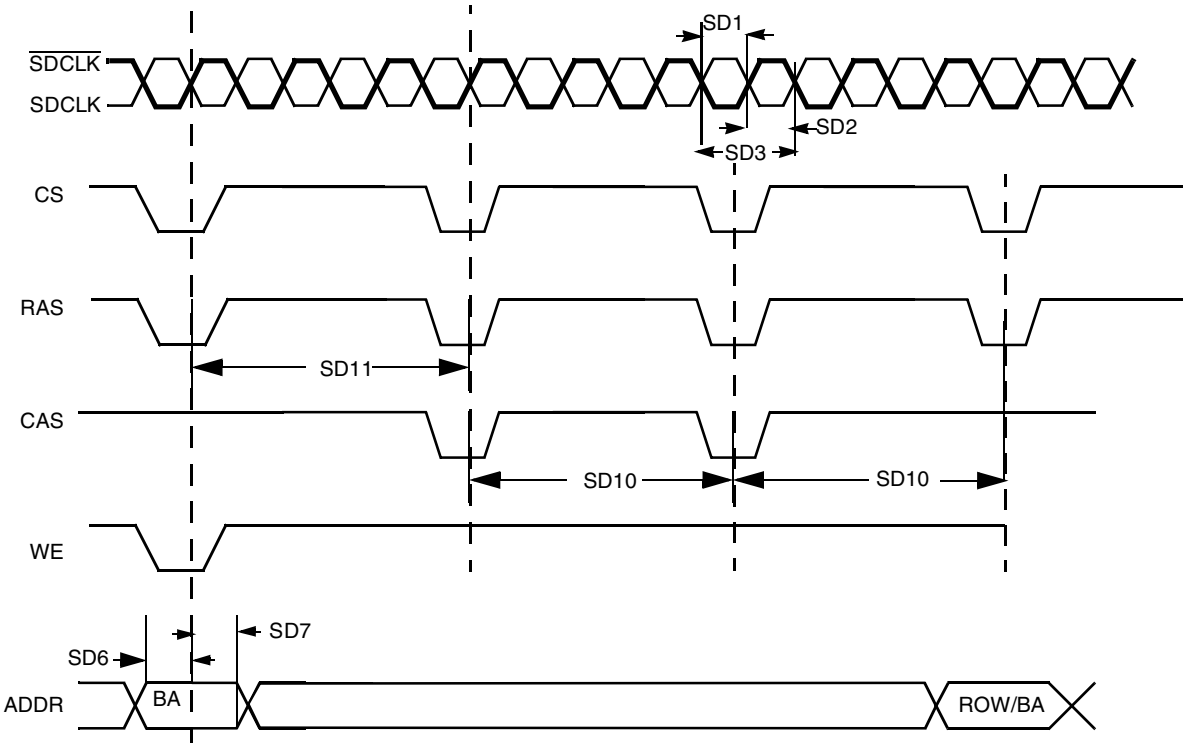

Figure 27. SDRAM Refresh Timing Diagram

Table 46. SDRAM Refresh Timing Parameters

ID	Parameter	Symbol	Min.	Max.	Unit
SD1	SDRAM clock high-level width	tCH	3.4	4.1	ns
SD2	SDRAM clock low-level width	tCL	3.4	4.1	ns
SD3	SDRAM clock cycle time	tCK	7.5	—	ns
SD6	Address setup time	tAS	1.8	—	ns
SD7	Address hold time	tAH	1.8	—	ns
SD10	Precharge cycle period[1]	tRP	1	4	clock
SD11	Auto precharge command period[1]	tRC	2	20	clock

[1] SD10 and SD11 are determined by SDRAM controller register settings.

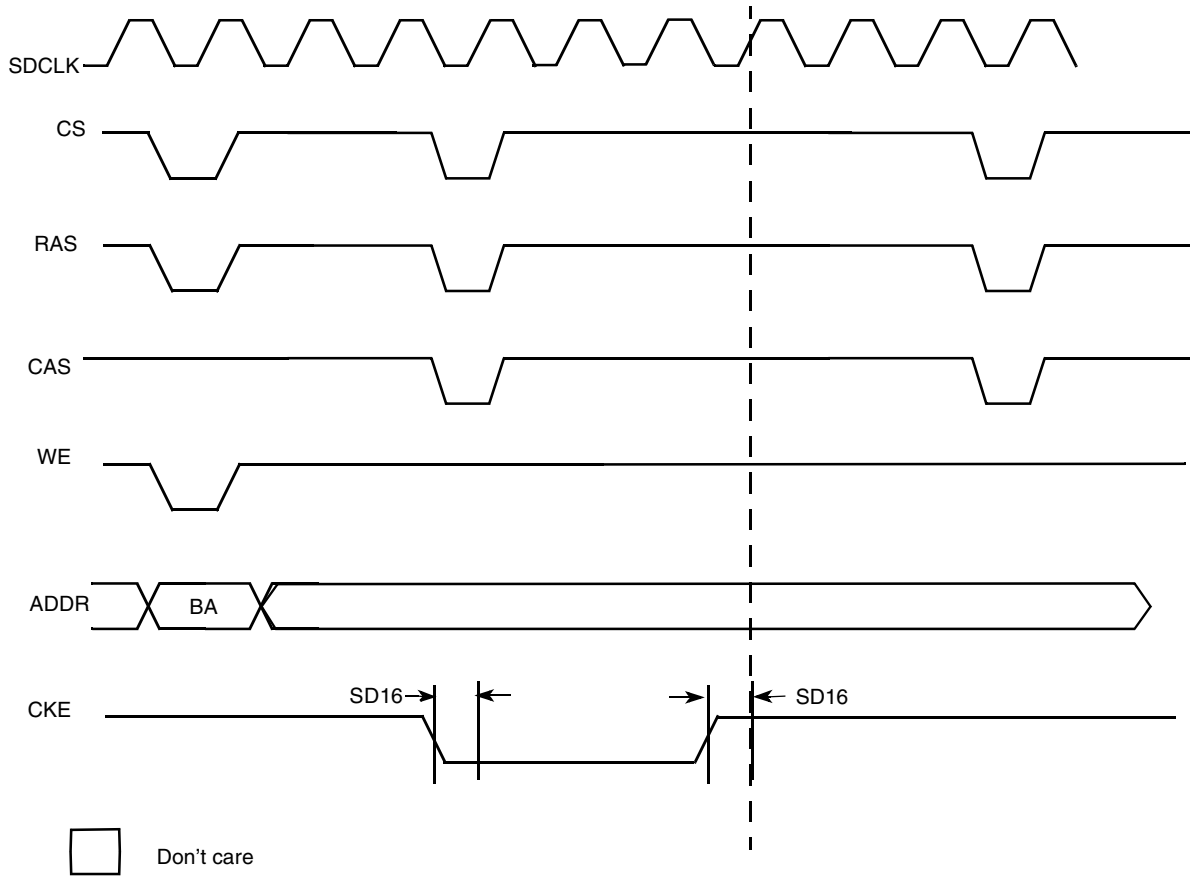

Figure 28. SDRAM Self-Refresh Cycle Timing Diagram

NOTE

The clock continues to run unless CKE is low. Then the clock is stopped in low state.

Table 47. SDRAM Self-Refresh Cycle Timing Parameters

ID	Parameter	Symbol	Min.	Max.	Unit
SD16	CKE output delay time	tCKS	1.8	—	ns

3.7.6.1.2 Mobile DDR SDRAM–Specific Parameters

The following diagrams and tables specify the timings related to the SDRAMC module which interfaces with the mobile DDR SDRAM.

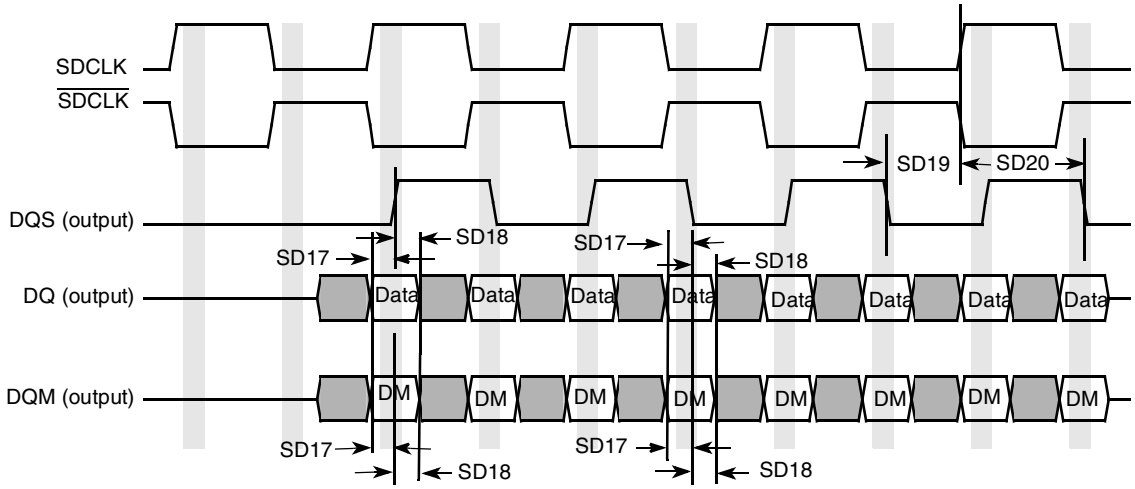

Figure 29. Mobile DDR SDRAM Write Cycle Timing Diagram

Table 48. Mobile DDR SDRAM Write Cycle Timing Parameters[1]

ID	Parameter	Symbol	Min.	Max.	Unit
SD17	DQ and DQM setup time to DQS	tDS	0.95	—	ns
SD18	DQ and DQM hold time to DQS	tDH	0.95	—	ns
SD19	Write cycle DQS falling edge to SDCLK output delay time	tDSS	1.8	—	ns
SD20	Write cycle DQS falling edge to SDCLK output hold time	tDSH	1.8	—	ns

[1] Test condition: Measured using delay line 5 programmed as follows: ESDCDLY5[15:0] = 0x0703.

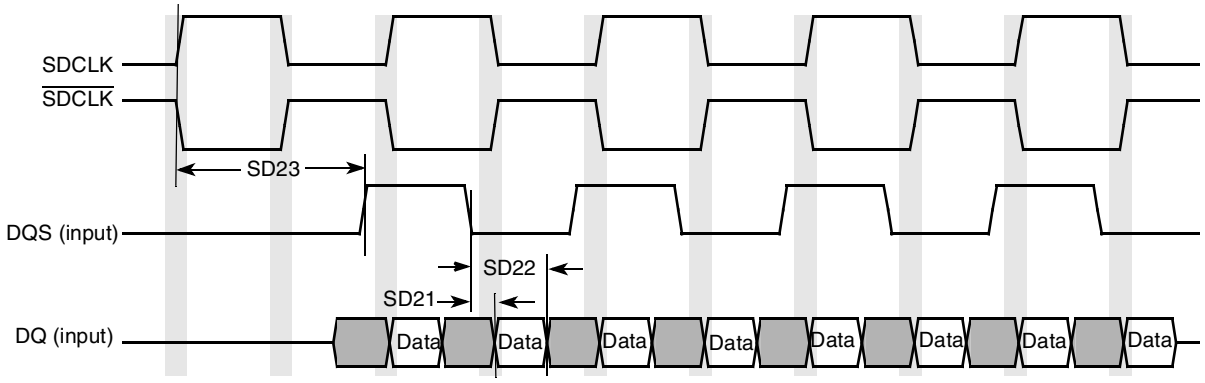

Figure 30. Mobile DDR SDRAM DQ versus DQS and SDCLK Read Cycle Timing Diagram

Table 49. Mobile DDR SDRAM Read Cycle Timing Parameters

ID	Parameter	Symbol	Min.	Max.	Unit
SD21	DQS – DQ Skew (defines the data valid window in read cycles related to DQS)	tDQSQ	—	0.85	ns
SD22	DQS DQ HOLD time from DQS	tQH	2.3	—	ns
SD23	DQS output access time from SDCLK posedge	tDQSCK	—	6.7	ns

3.7.6.1.3 DDR2 SDRAM–Specific Parameters

The following diagrams and tables specify timing related to the SDRAMC module, which interfaces with DDR2 SDRAM.

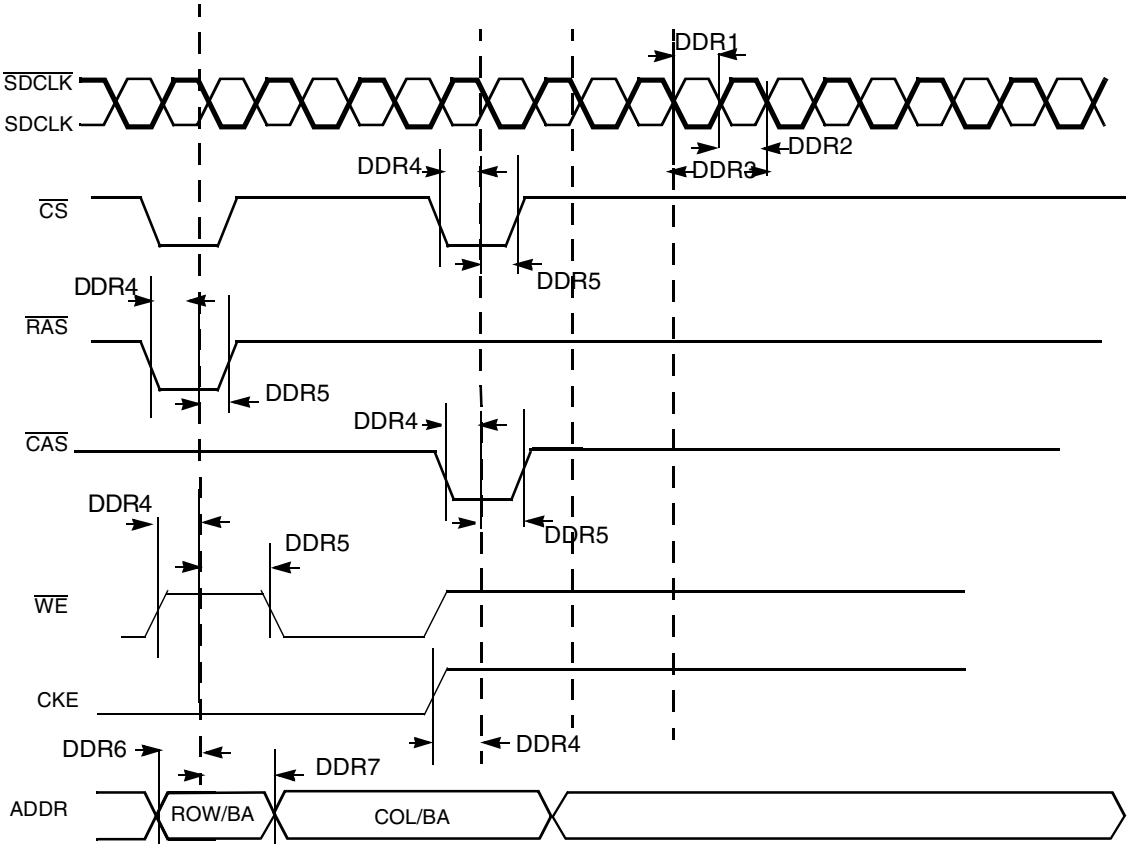

Figure 31. DDR2 SDRAM Basic Timing Parameters

Table 50 provides values for a command/address slew rate of 1 V/ns and an SDCLK, SDCLK_B differential slew rate of 2 V/ns. For additional values, use Table 51, “tIS, tIH Derating Values for DDR2-400, DDR2-533.”

Table 50. DDR2 SDRAM Timing Parameter Table

ID	Parameter	Symbol	DDR2-400		Unit
			Min.	Max.	
DDR1	SDRAM clock high-level width	t_{CH}	0.45	0.55	t_{CK}
DDR2	SDRAM clock low-level width	t_{CL}	0.45	0.55	t_{CK}
DDR3	SDRAM clock cycle time	t_{CK}	7.5	8	ns

Table 50. DDR2 SDRAM Timing Parameter Table (continued)

ID	Parameter	Symbol	DDR2-400		Unit
			Min.	Max.	
DDR4	CS, RAS, CAS, CKE, WE setup time	t_{IS}	1.2	—	ns
DDR5	CS, RAS, CAS, CKE, WE hold time	t_{IH}	1.2	—	ns
DDR6	Address output setup time	t_{IS}	1.2	—	ns
DDR7	Address output hold time	t_{IH}	0.475	—	ns

Table 50 shows values for a command/address slew rate of 1 V/ns and an SDCLK, SDCLK_B differential slew rate of 2 V/ns. Table 51 shows additional values for DDR2-400 and DDR2-533.

Table 51. tIS, tIH Derating Values for DDR2-400, DDR2-533

Command/ Address Slew Rate (V/Ns)	CK, CK Differential Slew Rate						Units
	2.0 V/ns		1.5 V/ns		1.0 V/ns		
	ΔtIS	ΔtIH	ΔtIS	ΔtIH	ΔtIS	ΔtIH	
4.0	+187	+94	+217	+124	+247	+154	ps
3.5	+179	+89	+209	+119	+239	+149	ps
3.0	+167	+83	+197	+113	+227	+143	ps
2.5	+150	+75	+180	+105	+210	+135	ps
2.0	+125	+45	+155	+75	+185	+105	ps
1.5	+83	+21	+113	+51	+143	+81	ps
1.0	0	0	+30	+30	+60	+60	ps
0.9	–11	–14	+19	+16	+49	+46	ps
0.8	–25	–31	+5	–1	+35	+29	ps
0.7	–43	–54	–13	–24	+17	+6	ps
0.6	–67	–83	–37	–53	–7	–23	ps
0.5	–110	–125	–80	–95	–50	–65	ps
0.4	–175	–188	–145	–158	–115	–128	ps
0.3	–285	–292	–255	–262	–225	–232	ps
0.25	–350	–375	–320	–345	–290	–315	ps
0.2	–525	–500	–495	–470	–465	–440	ps
0.15	–800	–708	–770	–678	–740	–648	ps
0.1	–1450	–1125	–1420	–1095	–1390	–1065	ps

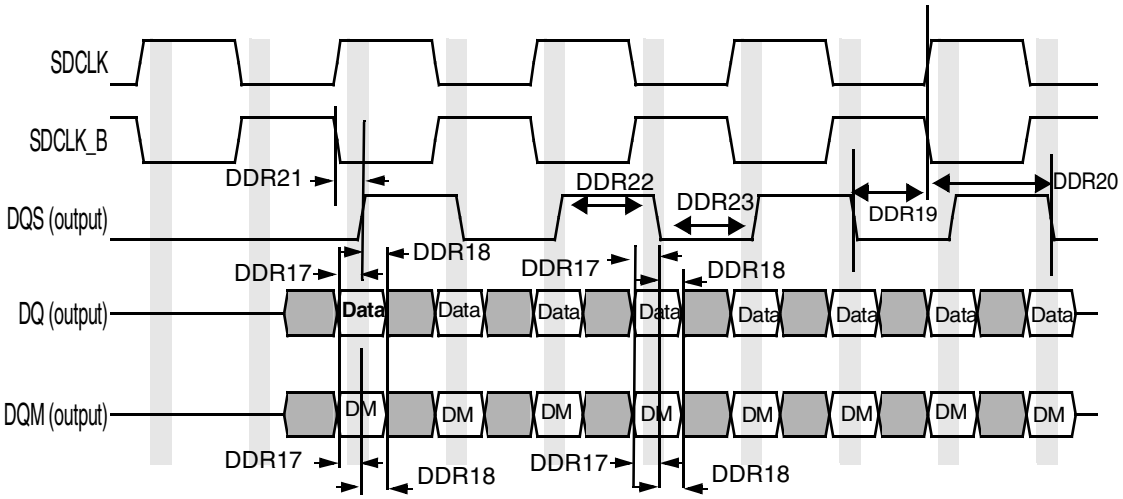

Figure 32. DDR2 SDRAM Write Cycle Timing Diagram

Table 52. DDR2 SDRAM Write Cycle Parameter Table

ID	Parameter	Symbol	DDR2-400		Unit
			Min.	Max.	
DDR17	DQ & DQM setup time to DQS (single-ended strobe)[1]	$t_{DS1(base)}$	0.6	—	ns
DDR18	DQ & DQM hold time to DQS (single-ended strobe)[1]	$t_{DH1(base)}$	0.6	—	ns
DDR19	Write cycle DQS falling edge to SDCLK output setup time	t_{DSS}	0.3	—	tCK
DDR20	Write cycle DQS falling edge to SDCLK output hold time	t_{DSH}	0.3	—	tCK
DDR21	DQS latching rising transitions to associated clock edges	t_{DQSS}	-0.2	0.2	tCK
DDR22	DQS high-level width	t_{DQSH}	0.35	—	tCK
DDR23	DQS low-level width	t_{DQSL}	0.35	—	tCK

[1] These values are for a DQ/DM slew rate of 1 V/ns and a DQS slew rate of 1 V/ns. For additional values use Table 53, "DtDS1, DtDH1 Derating Values for DDR2-400, DDR2-533."

Table 53. ΔtDS1, ΔtDH1 Derating Values for DDR2-400, DDR2-533[1,2,3]

	DQS Single-Ended Slew Rate																	
	2.0 V/ns		1.5 V/ns		1.0 V/ns		0.9 V/ns		0.8 V/ns		0.7 V/ns		0.6 V/ns		0.5 Vns		0.4 V/ns	
	ΔtDS1	ΔtDH1	ΔtDS1	ΔtDH1	ΔtDS1	ΔtDH1	ΔtDS1	ΔtDH1	ΔtDS1	ΔtDH1	ΔtDS1	ΔtDH1	ΔtDS1	ΔtDH1	ΔtDS1	ΔtDH1	ΔtDS1	ΔtDH1

Table 53. ΔtDS1, ΔtDH1 Derating Values for DDR2-400, DDR2-533[1,2,3] (continued)

		DQS Single-Ended Slew Rate																	
DQ Slew Rate V/ns	2.0	188	188	167	146	125	63	—	—	—	—	—	—	—	—	—	—	—	—
	1.5	146	167	125	125	83	42	81	43	—	—	—	—	—	—	—	—	—	—
	1.0	63	125	42	83	0	0	–2	1	–7	–13	—	—	—	—	—	—	—	—
	0.9	—	—	31	69	–11	–14	–13	–13	–18	–27	–29	–45	—	—	—	—	—	—
	0.8	—	—	—	—	–25	–31	–27	–30	–32	–44	–43	–62	–60	–86	—	—	—	—
	0.7	—	—	—	—	—	—	–45	–53	–50	–67	–61	–85	–78	–109	–108	–152	—	—
	0.6	—	—	—	—	—	—	—	—	–74	–96	–85	–114	–102	–138	–132	–181	–183	–246
	0.5	—	—	—	—	—	—	—	—	—	—	–128	–156	–145	–180	–175	–223	–226	–288
	0.4	—	—	—	—	—	—	—	—	—	—	—	—	–210	–243	–240	–286	–291	–351

1 All units in 'ps'.

2 Test conditions are at capacitance=15pF for DDR PADS. Recommended drive strengths are medium for SDCLK and high for address and controls.

3 SDRAM CLK and DQS related parameters are measured from the 50% point. That is, high is defined as 50% of the signal value, and low is defined as 50% of the signal value. DDR SDRAM CLK parameters are measured at the crossing point of SDCLK and SDCLK (inverted clock).

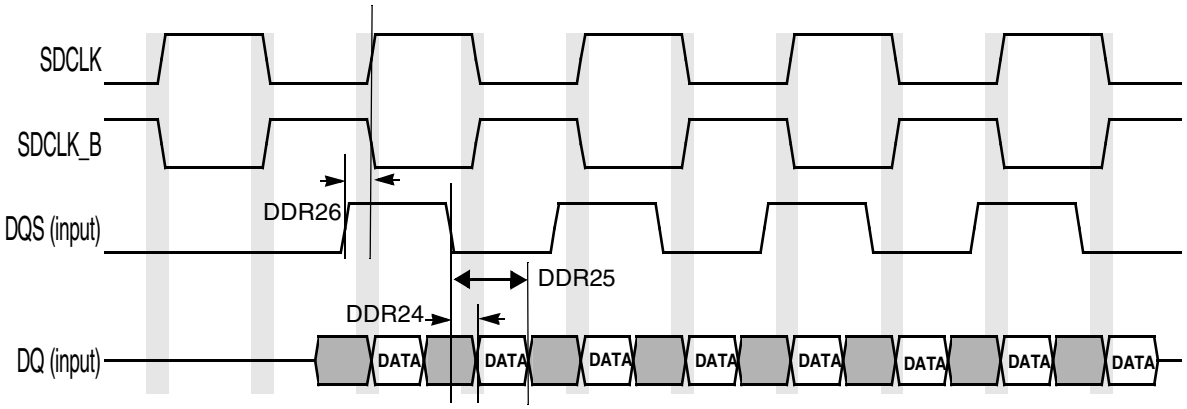

Figure 33. DDR2 SDRAM DQ vs. DQS and SDCLK READ Cycle Timing Diagram

Table 54. DDR2 SDRAM Read Cycle Parameter Table[1,2]

ID	Parameter	Symbol	DDR2-400		Unit
			Min.	Max.	
DDR24	DQS - DQ Skew (defines the Data valid window in read cycles related to DQS)	t_{DQSQ}	—	0.6	ns
DDR25	DQS DQ in HOLD time from DQS[3]	t_{QH}	2.5	—	ns
DDR26	DQS output access time from SDCLK posedge	t_{DQSCK}	–0.5	0.5	ns

1 Test conditions are at capacitance=15 pF for DDR PADS. Recommended drive strengths are medium for SDCLK and high for address and controls.

[2] SDRAM CLK and DQS-related parameters are measured from the 50% point. That is, high is defined as 50% of the signal value, and low is defined as 50% of the signal value. DDR SDRAM CLK parameters are measured at the crossing point of SDCLK and SDCLK (inverted clock).

[3] The value was calculated for an SDCLK frequency of 133 MHz, by the formula tQH = tHP – tQHS = min. (tCL,tCH) – tQHS = 0.45*tCK – tQHS = 0.45 * 7.5 – 0.45 = 2.925 ns

3.7.6.2 NAND Flash Controller (NFC) Timing

The i.MX25 NFC supports normal timing mode, using two Flash clock cycles for one access of $\overline{RE}$ and $\overline{WE}$. AC timings are provided as multiplications of the clock cycle and fixed delay. Figure 34 through Figure 37 depicts the relative timing between NFC signals at the module level for different operations under normal mode. Table 55 describes the timing parameters (NF1–NF17) that are shown in the figures.

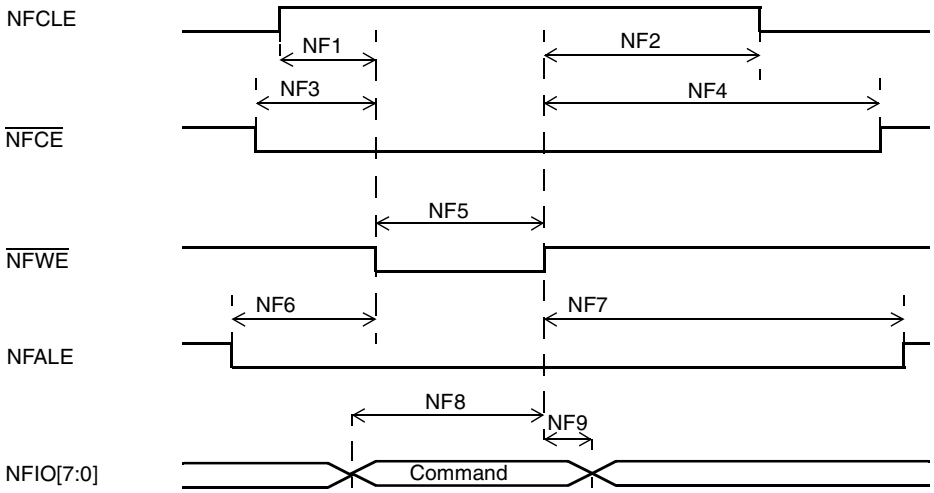

Figure 34. Command Latch Cycle Timing Diagram

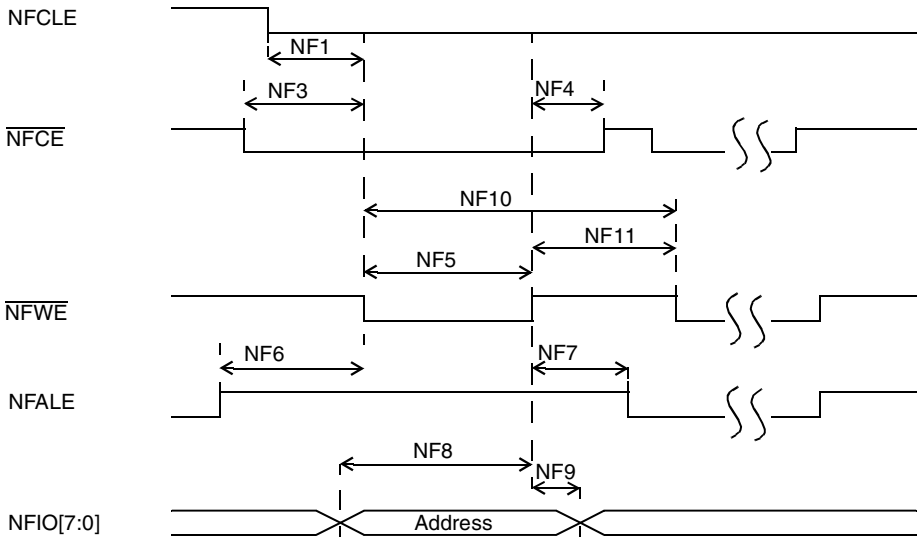

Figure 35. Address Latch Cycle Timing Diagram

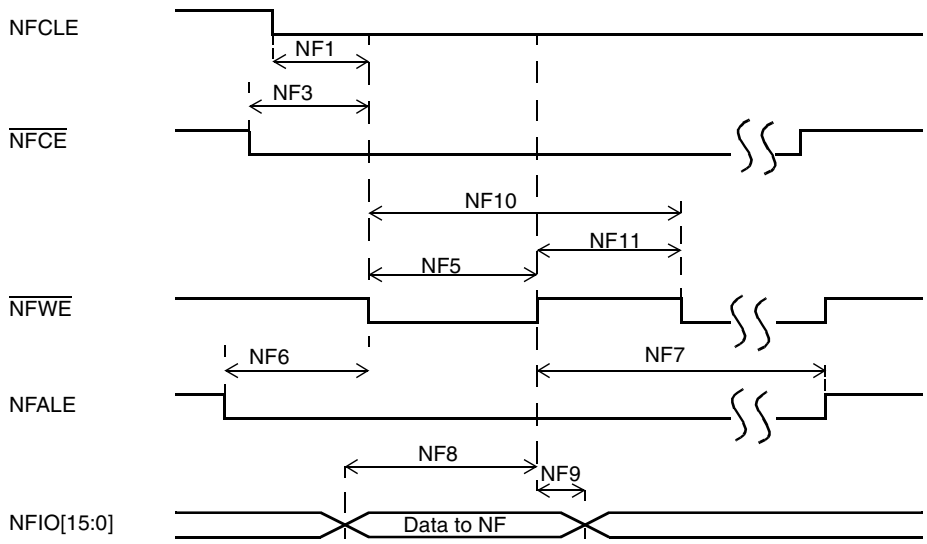

Figure 36. Write Data Latch Cycle Timing Diagram

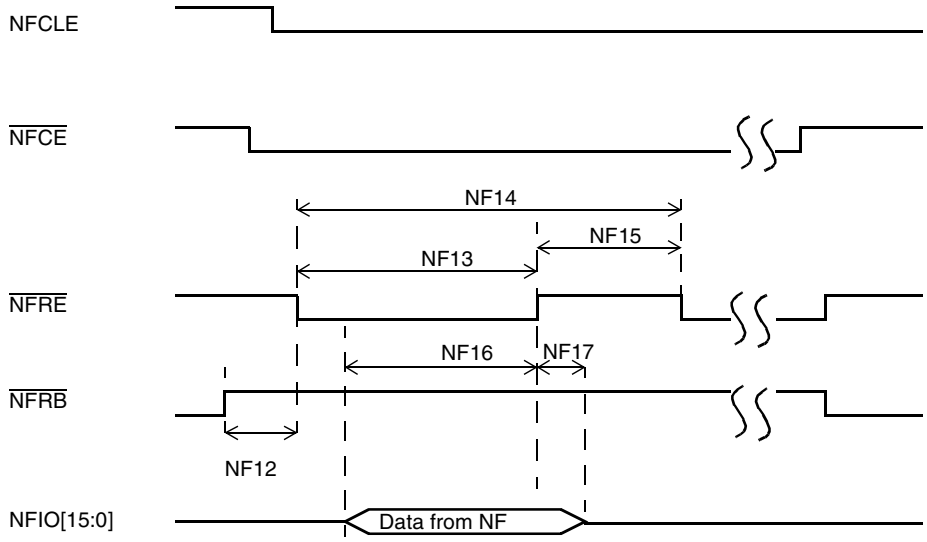

Figure 37. Read Data Latch Cycle Timing Diagram

Table 55. NFC Timing Parameters[1]

ID	Parameter	Symbol	Timing T = NFC Clock Cycle		Example Timing for NFC Clock ≈ 33 MHz T = 30 ns		Unit
			Min.	Max.	Min.	Max.	
NF1	NFCLE setup time	tCLS	T–1.0 ns	—	29	—	ns
NF2	NFCLE hold time	tCLH	T–2.0 ns	—	28	—	ns
NF3	$\overline{\text{NFCE}}$ setup time	tCS	2T–5.0 ns	—	55	—	ns
NF4	$\overline{\text{NFCE}}$ hold time	tCH	7T–5.0 ns	—	205	—	ns

Table 55. NFC Timing Parameters[1] (continued)

ID	Parameter	Symbol	Timing T = NFC Clock Cycle		Example Timing for NFC Clock ≈ 33 MHz T = 30 ns		Unit
			Min.	Max.	Min.	Max.	
NF5	$\overline{\text{NF_WP}}$ pulse width	tWP	T–1.5 ns		28.5		ns
NF6	NFALE setup time	tALS	T	—	30	—	ns
NF7	NFALE hold time	tALH	T–3.0 ns	—	27	—	ns
NF8	Data setup time	tDS	2T ns	—	60	—	ns
NF9	Data hold time	tDH	T–5.0 ns	—	25	—	ns
NF10	Write cycle time	tWC	2T		60		ns
NF11	$\overline{\text{NFWE}}$ hold time	tWH	T–2.5 ns		27.5		ns
NF12	Ready to $\overline{\text{NFRE}}$ low	tRR	21T–10 ns	—	620	—	ns
NF13	$\overline{\text{NFRE}}$ pulse width	tRP	1.5T	—	45	—	ns
NF14	READ cycle time	tRC	2T	—	60	—	ns
NF15	$\overline{\text{NFRE}}$ high hold time	tREH	0.5T–2.5 ns		12.5	—	ns
NF16	Data setup on read	tDSR	N/A		10	—	ns
NF17	Data hold on read	tDHR	N/A		0	—	ns

[1] The Flash clock maximum frequency is 50 MHz.

NOTE

For timing purposes, transition to signal high is defined as 80% of signal value; while signal low is defined as 20% of signal value.

Timing for HCLK is 133 MHz. The internal NFC clock (Flash clock) is approximately 33 MHz (30 ns). All timings are listed according to this NFC clock frequency (multiples of NFC clock phases), except NF16 and NF17, which are not related to the NFC clock.

3.7.6.3 Wireless External Interface Module (WEIM) Timing

Figure 38 depicts the timing of the WEIM module, and Table 56 describes the timing parameters (WE1–WE27) shown in the figure.

All WEIM output control signals may be asserted and negated by internal clock relative to BCLK rising edge or falling edge according to corresponding assertion/negation control fields. Address always begins relative to BCLK falling edge, but may be ended on rising or falling edge in muxed mode according to the control register configuration. Output data begins relative to BCLK rising edge except in muxed mode, where rising or falling edge may be used according to the control register configuration. Input data, $\overline{\text{ECB}}$ and $\overline{\text{DTACK}}$ are all captured relative to BCLK rising edge.

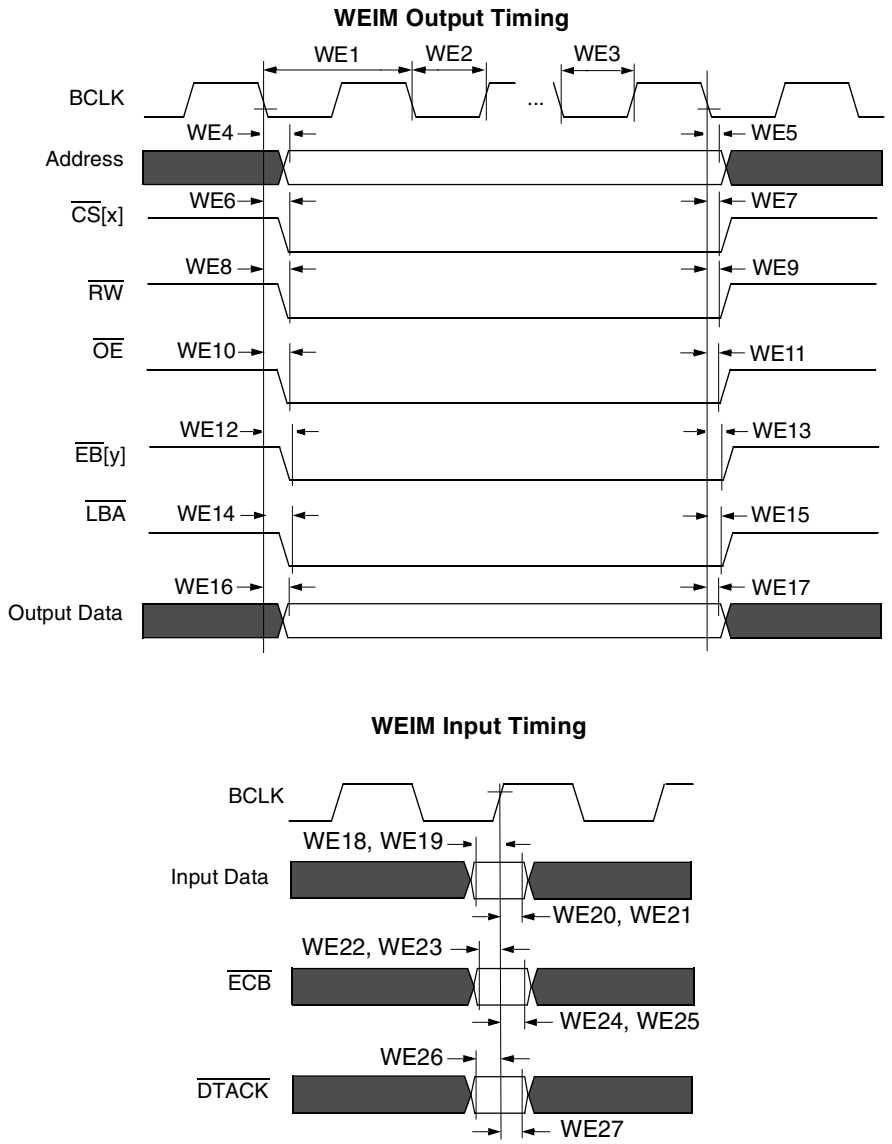

Figure 38. WEIM Bus Timing Diagram

Table 56. WEIM Bus Timing Parameters[1]

ID	Parameter	Min.	Max.	Unit
WE1	BCLK cycle time[2]	14.5	—	ns
WE2	BCLK low-level width[2]	7	—	ns
WE3	BCLK high-level width[2]	7	—	ns
WE4	Clock fall to address valid	15	21	ns
WE5	Clock rise/fall to address invalid	22	25	ns
WE6	Clock rise/fall to $\overline{CS}$[x] valid	15	19	ns
WE7	Clock rise/fall to $\overline{CS}$[x] invalid	3.3	5	ns

Table 56. WEIM Bus Timing Parameters[1] (continued)

ID	Parameter	Min.	Max.	Unit
WE8	Clock rise/fall to $\overline{RW}$ valid	8	12	ns
WE9	Clock rise/fall to $\overline{RW}$ invalid	3	8	ns
WE10	Clock rise/fall to $\overline{OE}$ valid	7	12	ns
WE11	Clock rise/fall to $\overline{OE}$ invalid	3.6	5.5	ns
WE12	Clock rise/fall to $\overline{EB}$[y] valid	6	11.5	ns
WE13	Clock rise/fall to $\overline{EB}$[y] invalid	6	10	ns
WE14	Clock rise/fall to $\overline{LBA}$ valid	17.5	20	ns
WE15	Clock rise/fall to $\overline{LBA}$ invalid	0	1	ns
WE16	Clock rise/fall to output data valid	5	10	ns
WE17	Clock rise to output data invalid	0	2.5	ns
WE18	Input data valid to clock rise, FCE=1	1	—	ns
WE19	Input Data Valid to Clock rise, FCE=0 (in the case there is $\overline{ECB}$ asserted during access)	1/2 BCLK +2.63	—	ns
	Input Data Valid to Clock rise, FCE=0 (in the case there is NO $\overline{ECB}$ asserted during access)	6.9	—	ns
WE20	Clock rise to input data invalid, FCE=1	1	—	ns
WE21	Clock rise to input data invalid, FCE=0	2.4	—	ns
WE22	$\overline{ECB}$ setup time, FCE=1	5	—	ns
WE23	$\overline{ECB}$ setup time, FCE=0	7.2	—	ns
WE24	$\overline{ECB}$ hold time, FCE=1	5	—	ns
WE25	$\overline{ECB}$ hold time, FCE=0	0	—	ns
WE26	$\overline{DTACK}$ setup time	5.4	—	ns
WE27	$\overline{DTACK}$ hold time	–3.2	—	ns

1 High is defined as 80% of signal value; low is defined as 20% of signal value.

2 BCLK parameters are being measured from the 50% point. For example, high is defined as 50% of signal value and low is defined as 50% as signal value.

NOTE

The test condition load capacitance was 25 pF. Recommended drive strength for all controls, address, and BCLK is maximum drive.

Recommended drive strength for all controls, address and BCLK is maximum drive.

Figure 39 through Figure 44 give examples of basic WEIM accesses to external memory devices with the timing parameters described in Table 56 for specific control parameter settings.

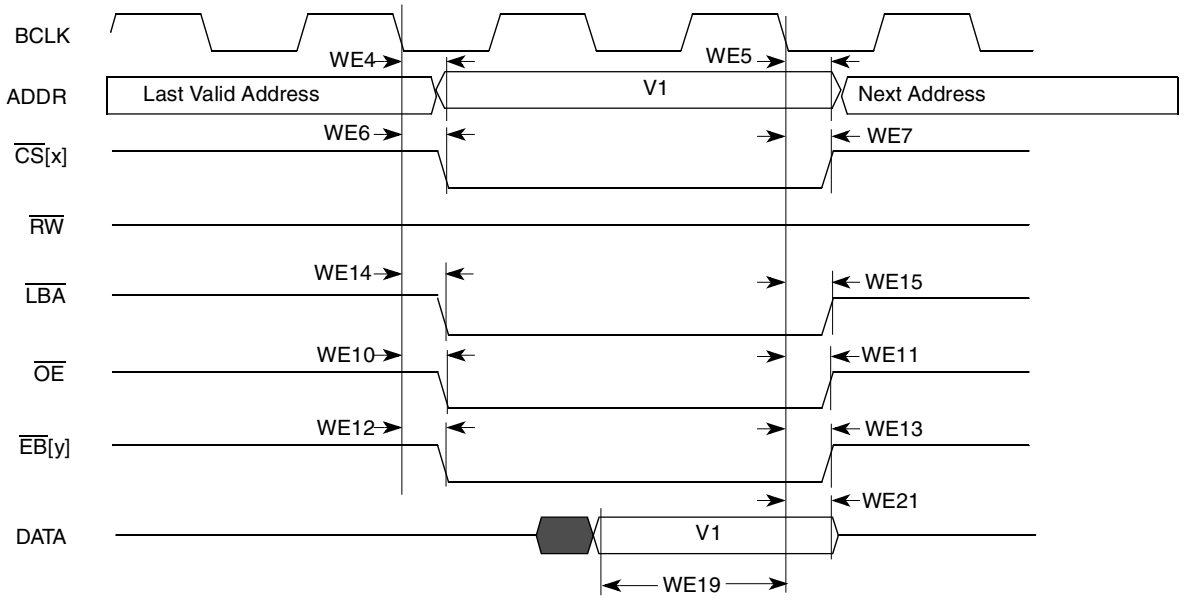

Figure 39. Synchronous Memory Timing Diagram for Read Access—WSC=1

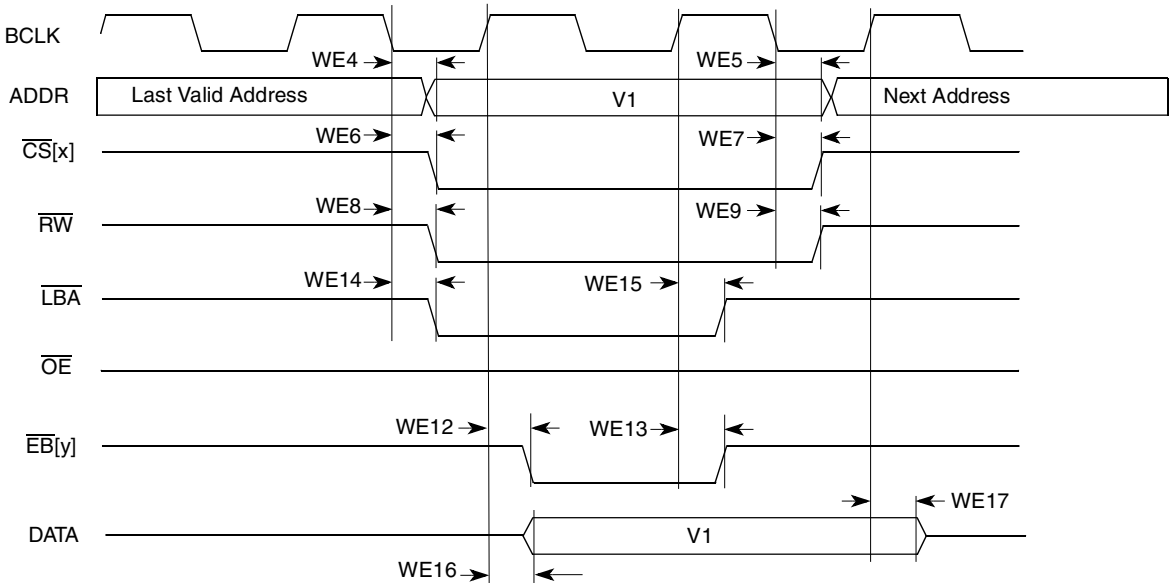

Figure 40. Synchronous Memory Timing Diagram for Write Access—WSC=1, EBWA=1, EBWN=1, LBN=1

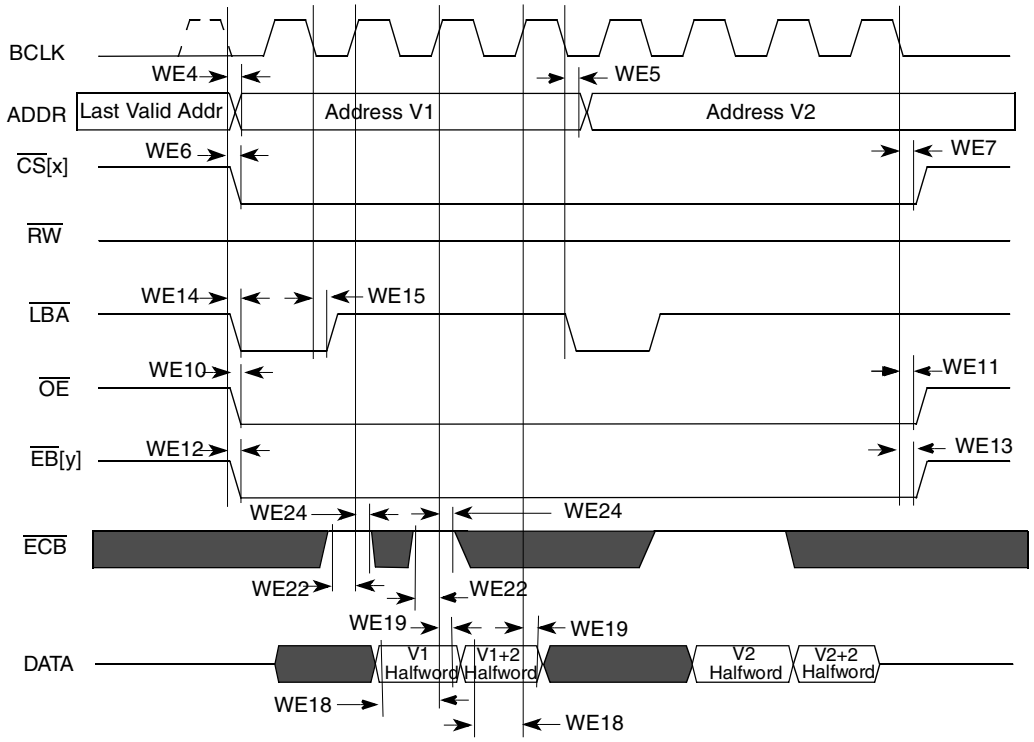

Figure 41. Synchronous Memory Timing Diagram for Two Non-Sequential Read Accesses—WSC=2, SYNC=1, DOL=0

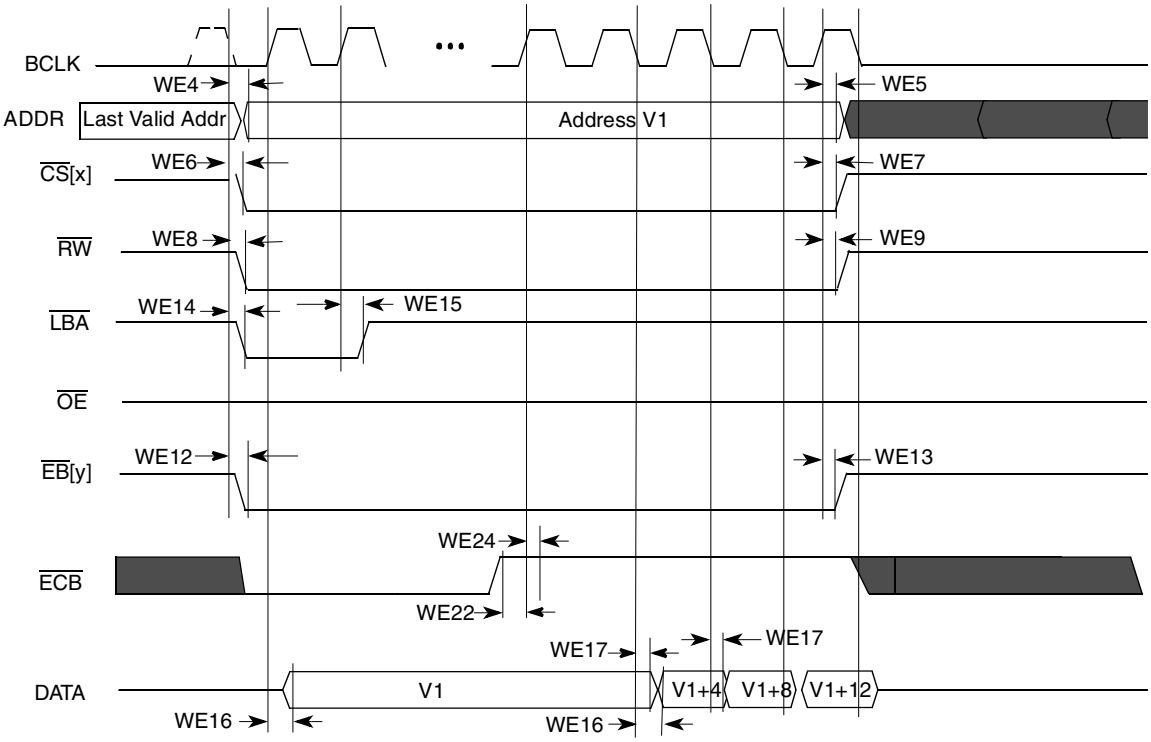

Figure 42. Synchronous Memory TIming Diagram for Burst Write Access—BCS=1, WSC=4, SYNC=1, DOL=0, PSR=1

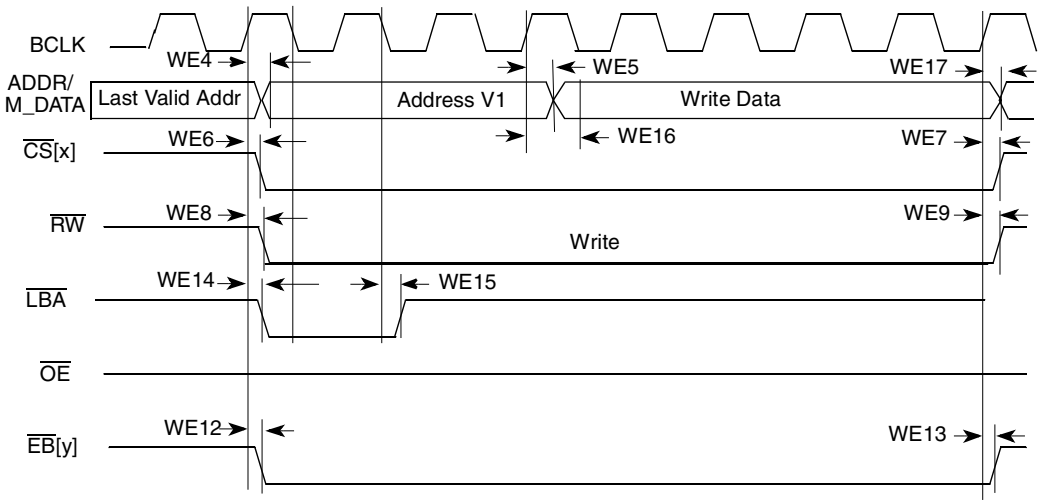

Figure 43. Muxed A/D Mode Timing Diagram for Synchronous Write Access—WSC=7, LBA=1, LBN=1, LAH=1

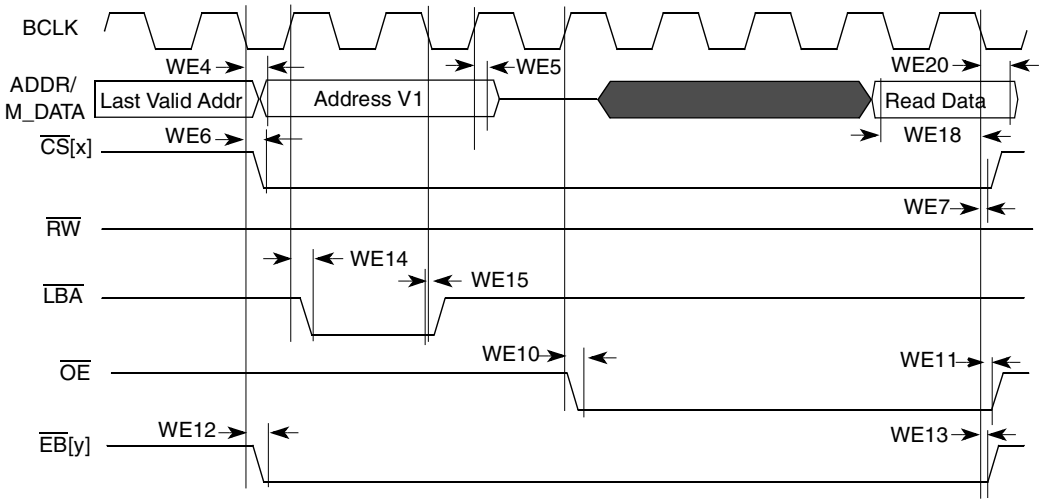

Figure 44. Muxed A/D Mode Timing Diagram for Synchronous Read Access—WSC=7, LBA=1, LBN=1, LAH=1, OEA=7

Figure 45 through Figure 49, and Table 57 help to determine timing parameters relative to chip select (CS) state for asynchronous and DTACK WEIM accesses with corresponding WEIM bit fields and the timing parameters mentioned above.

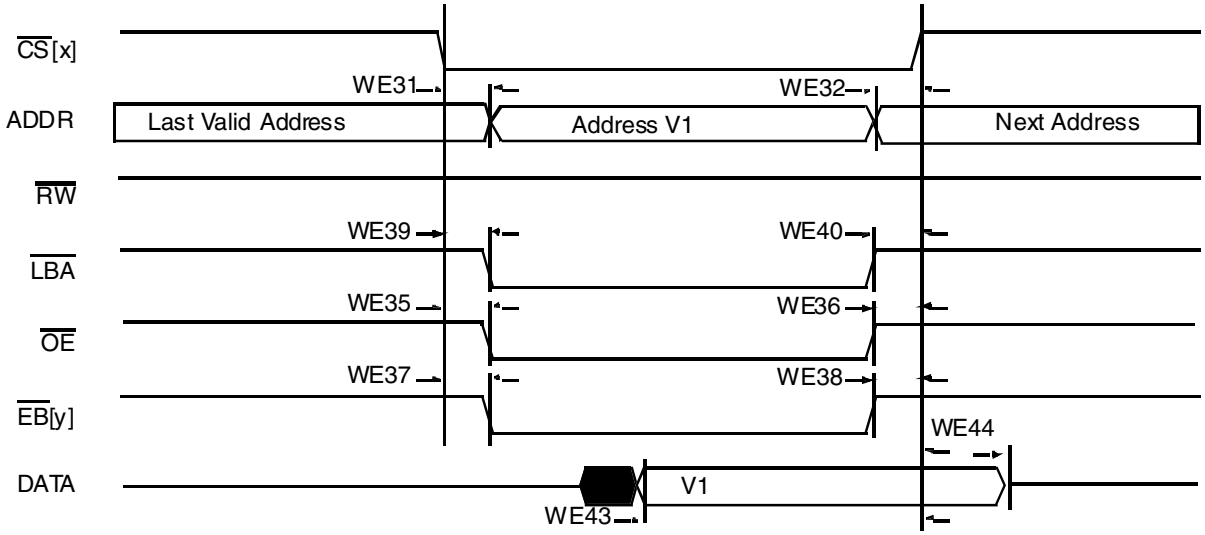

Figure 45. Asynchronous Memory Read Access

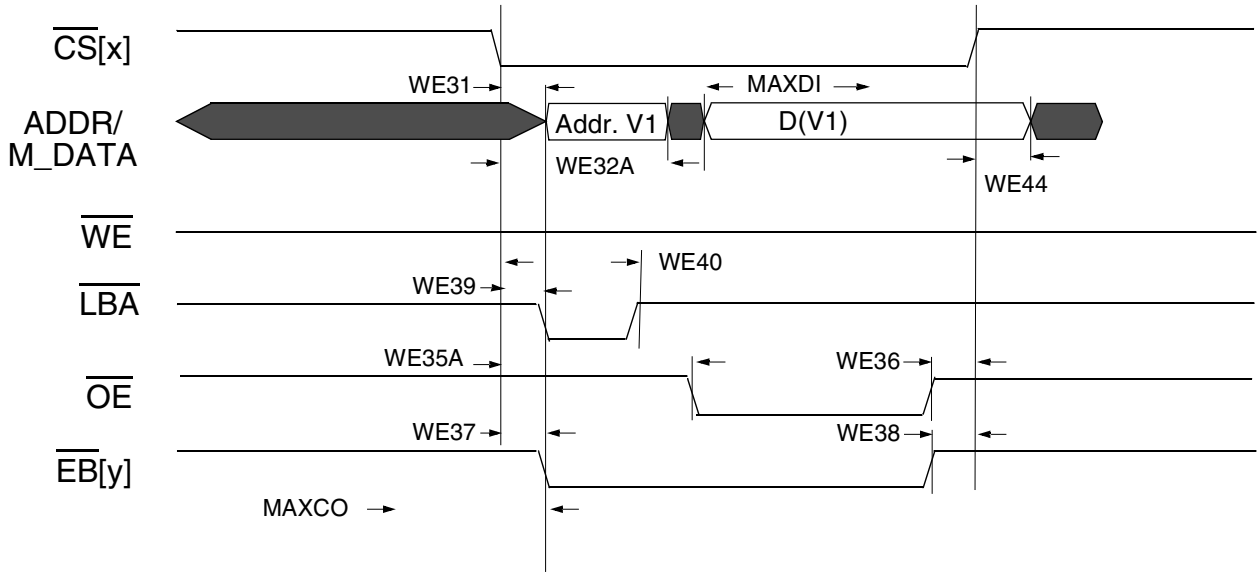

Figure 46. Asynchronous A/D Muxed Read Access (RWSC = 5)

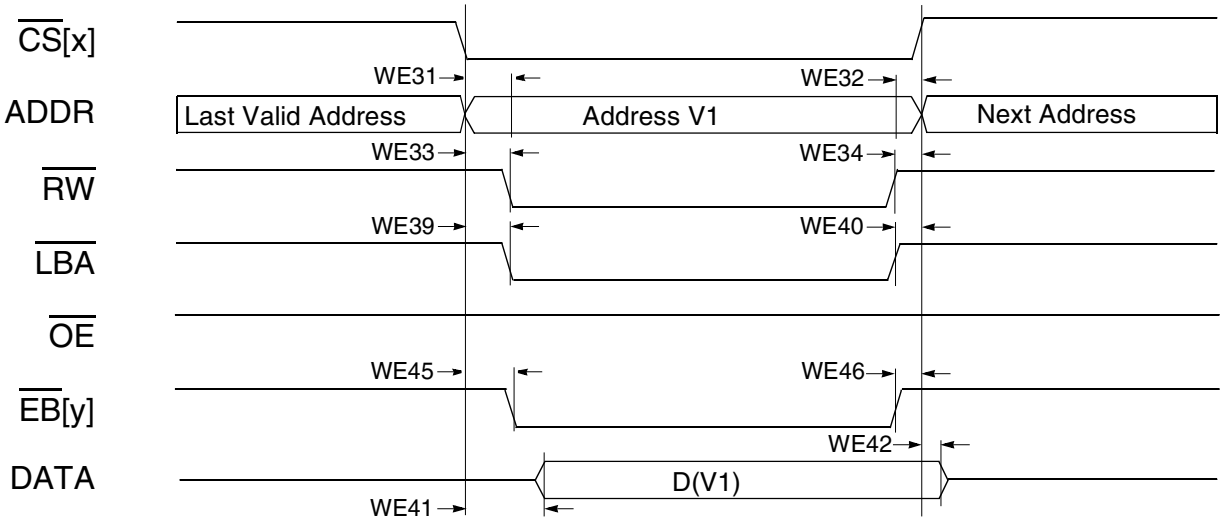

Figure 47. Asynchronous Memory Write Access

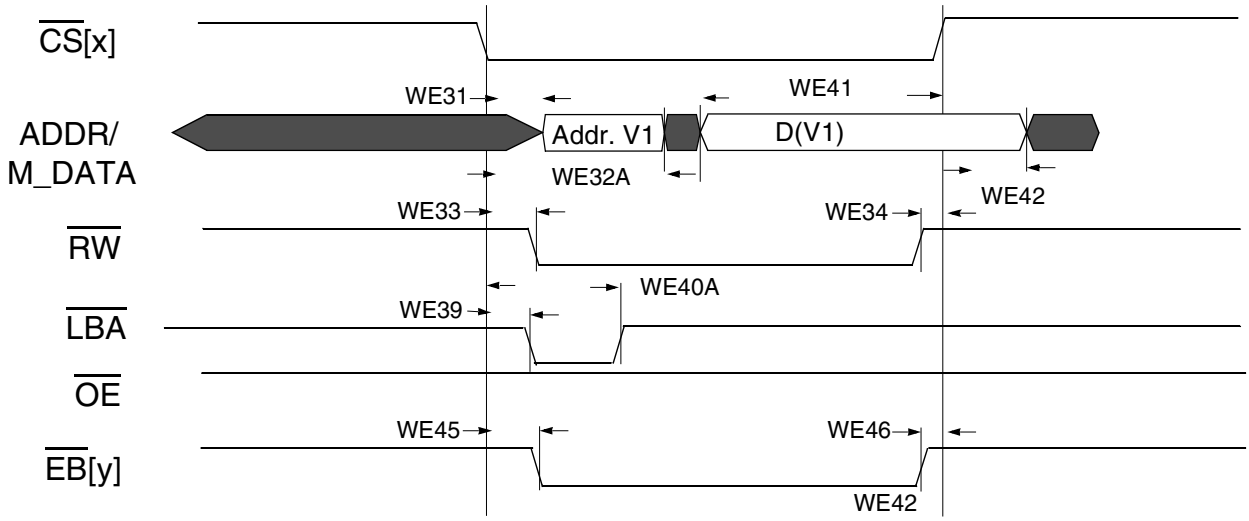

Figure 48. Asynchronous A/D Mux Write Access

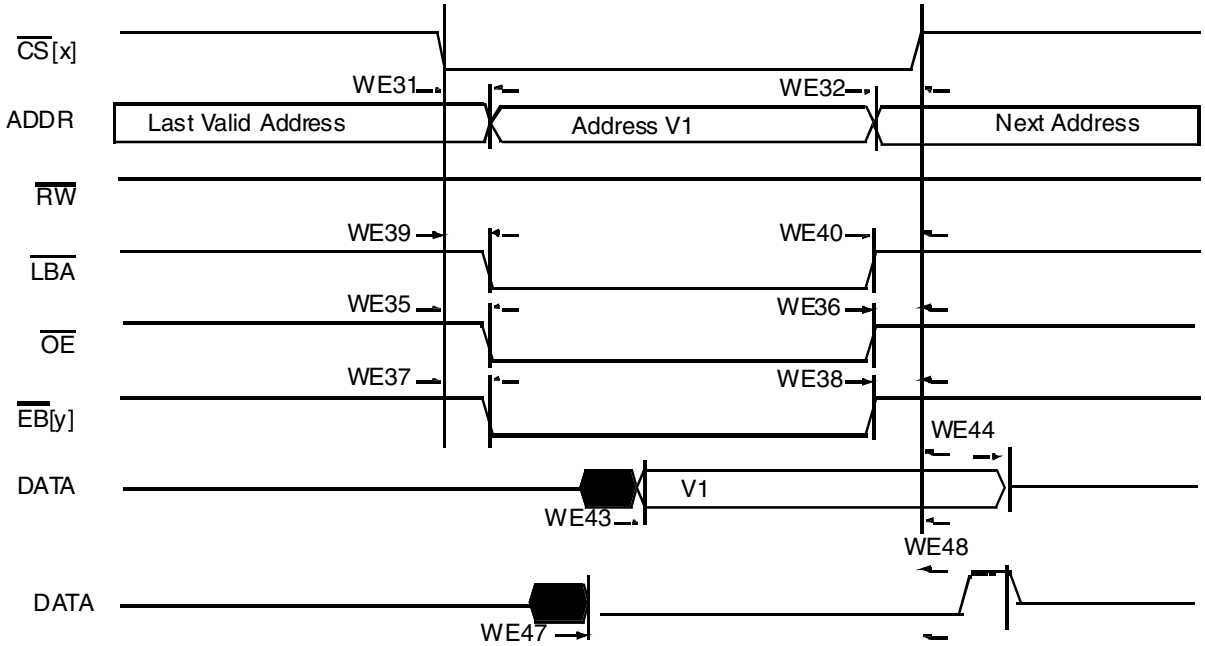

Figure 49. DTACK Read Access

Table 57. WEIM Asynchronous Timing Parameters Relative to Chip Select Table

Ref No.	Parameter	Determination By Synchronous Measured Parameters[1]	Min	Max (If 133 MHz is supported by SoC)	Unit
WE31	$\overline{CS}$[x] valid to Address Valid	WE4 – WE6 – CSA[2]	—	3 – CSA	ns
WE32	Address Invalid to $\overline{CS}$[x] invalid	WE7 – WE5 – CSN[3]	—	3 – CSN	ns

Table 57. WEIM Asynchronous Timing Parameters Relative to Chip Select Table (continued)

Ref No.	Parameter	Determination By Synchronous Measured Parameters[1]	Min	Max (If 133 MHz is supported by SoC)	Unit
WE32A(muxed A/D	$\overline{CS}$[x] valid to Address Invalid	WE4 – WE7 + (LBN + LBA + 1 – CSA[2])	–3 + (LBN + LBA + 1 – CSA)	—	ns
WE33	$\overline{CS}$[x] Valid to $\overline{RW}$ Valid	WE8 – WE6 + (RWA – CSA)	—	3 + (RWA – CSA)	ns
WE34	$\overline{RW}$ Invalid to $\overline{CS}$[x] Invalid	WE7 – WE9 + (RWN – CSN)	—	3 – (RWN_CSN)	ns
WE35	$\overline{CS}$[x] Valid to $\overline{OE}$ Valid	WE10 – WE6 + (OEA – CSA)	—	3 + (OEA – CSA)	ns
WE35A (muxed A/D)	$\overline{CS}$[x] Valid to $\overline{OE}$ Valid	WE10 – WE6 + (OEA + LBN + LBA + LAH + 1 – CSA)	–3 + (OEA + LBN + LBA + LAH + 1 – CSA)	3 + (OEA + LBN + LBA + LAH + 1 – CSA)	ns
WE36	$\overline{OE}$ Invalid to $\overline{CS}$[x] Invalid	WE7 – WE11 + (OEN – CSN)	—	3 – (OEN – CSN)	ns
WE37	$\overline{CS}$[x] Valid to $\overline{EB}$[y] Valid (Read access)	WE12 – WE6 + (EBRA – CSA)	—	3 + (EBRA[4] – CSA)	ns
WE38	$\overline{EB}$[y] Invalid to $\overline{CS}$[x] Invalid (Read access)	WE7 – WE13 + (EBRN – CSN)	—	3 – (EBRN[5] – CSN)	ns
WE39	$\overline{CS}$[x] Valid to $\overline{LBA}$ Valid	WE14 – WE6 + (LBA – CSA)	—	3 + (LBA – CSA)	ns
WE40	$\overline{LBA}$ Invalid to $\overline{CS}$[x] Invalid	WE7 – WE15 – CSN	—	3 – CSN	ns
WE40A (muxed A/D)	$\overline{CS}$[x] Valid to $\overline{LBA}$ Invalid	WE14 – WE6 + (LBN + LBA + 1 – CSA)	–3 + (LBN + LBA + 1 – CSA)	3 + (LBN + LBA + 1 – CSA)	ns
WE41	$\overline{CS}$[x] Valid to Output Data Valid	WE16 – WE6 – CSA	—	3 – CSA	ns
WE41A (muxed A/D)	$\overline{CS}$[x] Valid to Output Data Valid	WE16 – WE6 + (LBN + LBA + LAH + 1 – CSA)	—	3 + (LBN + LBA + LAH + 1 – CSA)	ns
WE42	Output Data Invalid to $\overline{CS}$[x] Invalid	WE17 – WE7 – CSN	—	3 – CSN	ns
WE43	Input Data Valid to $\overline{CS}$[x] Invalid	MAXCO – MAXCSO + MAXDI	MAXCO[6] – MAXCSO[7] + MAXDI[8]	—	ns
WE44	$\overline{CS}$[x] Invalid to Input Data invalid	0	0	—	ns
WE45	$\overline{CS}$[x] Valid to $\overline{EB}$[y] Valid (Write access)	WE12 – WE6 + (EBWA – CSA)	—	3 + (EBWA – CSA)	ns
WE46	$\overline{EB}$[y] Invalid to $\overline{CS}$[x] Invalid (Write access)	WE7 – WE13 + (EBWN – CSN)	—	–3 + (EBWN – CSN)	ns
WE47	$\overline{DTACK}$ Valid to $\overline{CS}$[x] Invalid	MAXCO – MAXCSO + MAXDTI	MAXCO[6] – MAXCSO[7] + MAXDTI[9]	—	ns
WE48	$\overline{CS}$[x] Invalid to $\overline{DTACK}$ invalid	0	0	—	ns

[1] For the value of parameters WE4–WE21, see column BCD = 0 in Table 56.
[2] $\overline{CS}$ Assertion. This bit field determines when the $\overline{CS}$ signal is asserted during read/write cycles.
[3] $\overline{CS}$ Negation. This bit field determines when the $\overline{CS}$ signal is negated during read/write cycles.
[4] $\overline{BE}$ Assertion. This bit field determines when the $\overline{BE}$ signal is asserted during read cycles.
[5] $\overline{BE}$ Negation. This bit field determines when the $\overline{BE}$ signal is negated during read cycles.
[6] Output maximum delay from internal driving ADDR/control FFs to chip outputs.
[7] Output maximum delay from $\overline{CS}$[x] internal driving FFs to $\overline{CS}$[x] out.
[8] DATA maximum delay from chip input data to its internal FF.
[9] DTACK maximum delay from chip dtack input to its internal FF.

NOTE

All configuration parameters (CSA, CSN, EBWA, EBWN, LBA, LBN, LAH, OEN, OEA, EBRA, and EBRN) are in cycle units.

3.7.7 Enhanced Serial Audio Interface (ESAI) Timing

This section describes general timing requirements for ESAI, as well as the ESAI transmit and receive timing.

Figure 50 shows the ESAI transmit timing diagram.

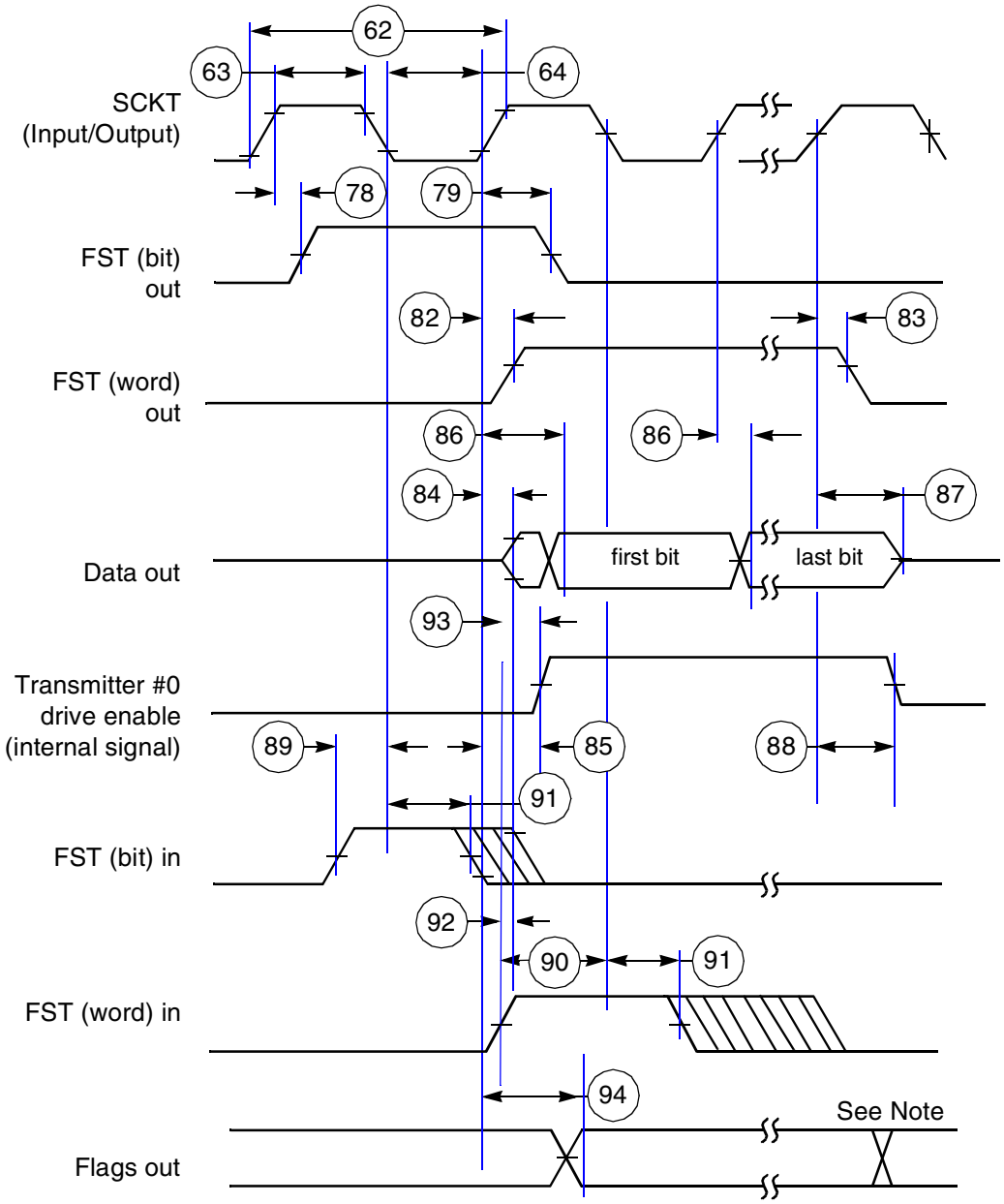

Note: In network mode, output flag transitions can occur at the start of each time slot within the frame. In normal mode, the output flag state is asserted for the entire frame period.

Figure 50. ESAI Transmit Timing

Figure 51 shows the ESAI receive timing diagram.

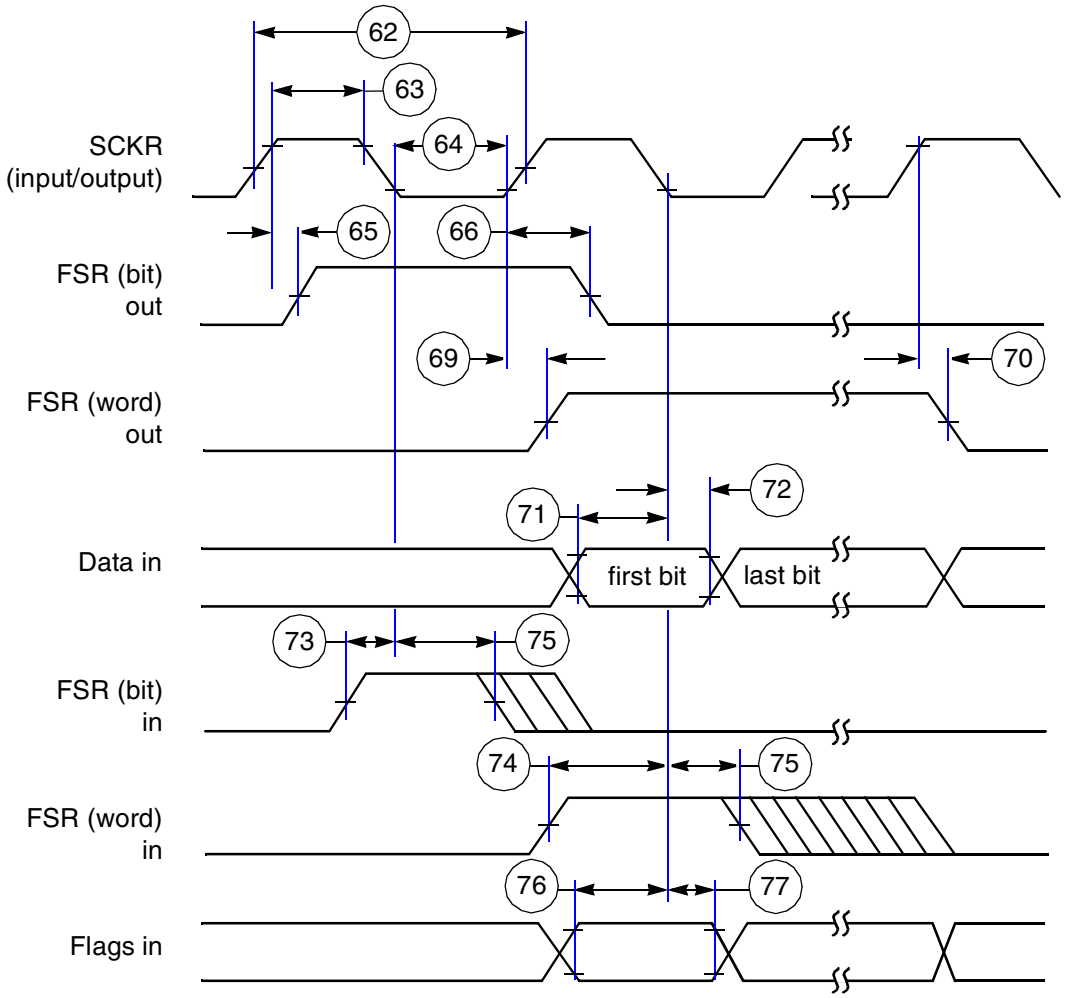

Figure 51. ESAI Receive Timing Diagram

Figure 52 shows the ESAI HCKT timing diagram.

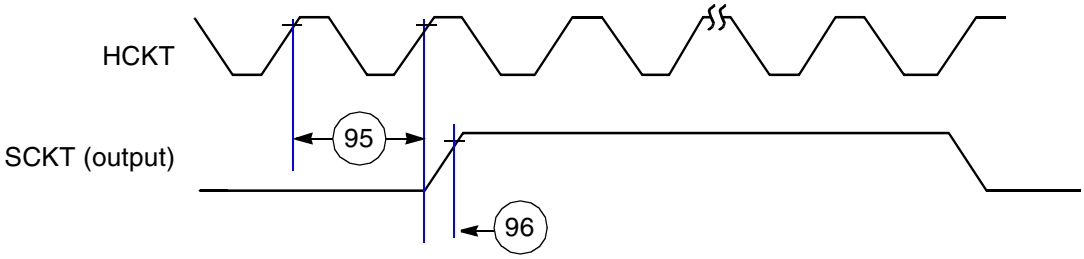

Figure 52. ESAI HCKT Timing

Figure 53 shows the ESAI HCKR timing diagram.

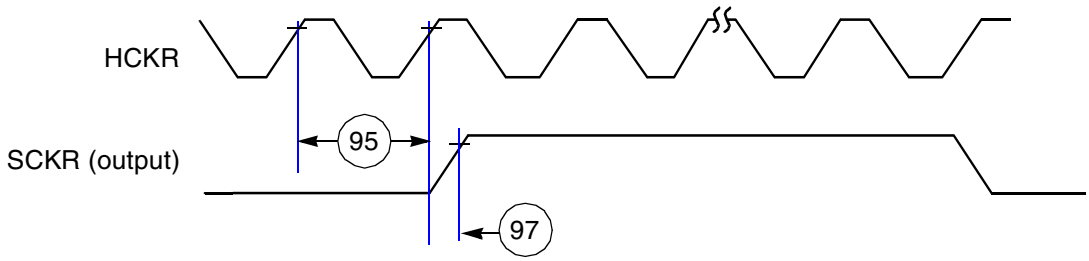

Figure 53. ESAI HCKR Timing

Table 60 describes the general timing requirements for the ESAI module. Table 58 and Table 59 describe respectively the conditions and signals cited in Table 60.

Table 58. ESAI Timing Conditions

Symbol	Significance	Comments
i ck	Internal clock	In the i.MX25, the internal clock frequency is equal to the IP bus frequency (133 MHz)
x ck	External clock	The external clock may be derived from the CRM module or other external clock sources
i ck a	Internal clock, asynchronous mode	In asynchronous mode, SCKT and SCKR are different clocks
i ck s	Internal clock, synchronous mode	In synchronous mode, SCKT and SCKR are the same clock

Table 59. ESAI Signals

Signal Name	Significance
SCKT	Transmit clock
SCKR	Receive clock
FST	Transmit frame sync
HCKT	Transmit high-frequency clock
HCKR	Receive high-frequency clock

Table 60. ESAI General Timing Requirements

No.	Characteristics[1 2]	Symbol	Expression[3]	Min.	Max.	Condition	Unit
62	Clock cycle[4]	t_{SSICC}	$4 \times T_c$ $4 \times T_c$	30.0 30.0	— —	i ck i ck	ns
63	Clock high period For internal clock For external clock	— — —	— $2 \times T_c - 9.0$ $2 \times T_c$	— 6 15	— — —	— —	ns
64	Clock low period For internal clock For external clock	 — —	 $2 \times T_c - 9.0$ $2 \times T_c$	 6 15	 — —	— —	ns

Table 60. ESAI General Timing Requirements (continued)

No.	Characteristics[1 2]	Symbol	Expression[3]	Min.	Max.	Condition	Unit
65	SCKR rising edge to FSR out (bl) high	—	—	— —	17.0 7.0	x ck i ck a	ns
66	SCKR rising edge to FSR out (bl) low	—	—	— —	17.0 7.0	x ck i ck a	ns
67	SCKR rising edge to FSR out (wr) high[5]	—	—	— —	19.0 9.0	x ck i ck a	ns
68	SCKR rising edge to FSR out (wr) low[5]	—	—	— —	19.0 9.0	x ck i ck a	ns
69	SCKR rising edge to FSR out (wl) high	—	—	— —	16.0 6.0	x ck i ck a	ns
70	SCKR rising edge to FSR out (wl) low	—	—	— —	17.0 7.0	x ck i ck a	ns
71	Data in setup time before SCKR (SCK in synchronous mode) falling edge	—	—	12.0 19.0	— —	x ck i ck	ns
72	Data in hold time after SCKR falling edge	—	—	3.5 9.0	— —	x ck i ck	ns
73	FSR input (bl, wr) high before SCKR falling edge[5]	—	—	2.0 12.0	— —	x ck i ck a	ns
74	FSR input (wl) high before SCKR falling edge	—	—	2.0 12.0	— —	x ck i ck a	ns
75	FSR input hold time after SCKR falling edge	—	—	2.5 8.5	— —	x ck i ck a	ns
76	Flags input setup before SCKR falling edge	—	—	0.0 19.0	— —	x ck i ck s	ns
77	Flags input hold time after SCKR falling edge	—	—	6.0 0.0	— —	x ck i ck s	ns
78	SCKT rising edge to FST out (bl) high	—	—	— —	18.0 8.0	x ck i ck	ns
79	SCKT rising edge to FST out (bl) low	—	—	— —	20.0 10.0	x ck i ck	ns
80	SCKT rising edge to FST out (wr) high[5]	—	—	— —	20.0 10.0	x ck i ck	ns
81	SCKT rising edge to FST out (wr) low[5]	—	—	— —	22.0 12.0	x ck i ck	ns
82	SCKT rising edge to FST out (wl) high	—	—	— —	19.0 9.0	x ck i ck	ns
83	SCKT rising edge to FST out (wl) low	—	—	— —	20.0 10.0	x ck i ck	ns
84	SCKT rising edge to data out enable from high impedance	—	—	— —	22.0 17.0	x ck i ck	ns
85	SCKT rising edge to transmitter #0 drive enable assertion	—	—	— —	17.0 11.0	x ck i ck	ns

Table 60. ESAI General Timing Requirements (continued)

No.	Characteristics[1 2]	Symbol	Expression[3]	Min.	Max.	Condition	Unit
86	SCKT rising edge to data out valid	—	—	— —	18.0 13.0	x ck i ck	ns
87	SCKT rising edge to data out high impedance[6]	—	—	— —	21.0 16.0	x ck i ck	ns
88	SCKT rising edge to transmitter #0 drive enable negation[6]	—	—	— —	14.0 9.0	x ck i ck	ns
89	FST input (bl, wr) setup time before SCKT falling edge[5]	—	—	2.0 18.0	— —	x ck i ck	ns
90	FST input (wl) setup time before SCKT falling edge	—	—	2.0 18.0	— —	x ck i ck	ns
91	FST input hold time after SCKT falling edge	—	—	4.0 5.0	— —	x ck i ck	ns
92	FST input (wl) to data out enable from high impedance	—	—	—	21.0	—	ns
93	FST input (wl) to transmitter #0 drive enable assertion	—	—	—	14.0	—	ns
94	Flag output valid after SCKT rising edge	—	—	— —	14.0 9.0	x ck i ck	ns
95	HCKR/HCKT clock cycle	—	$2 \times T_C$	15	—	—	ns
96	HCKT input rising edge to SCKT output	—	—	—	18.0	—	ns
97	HCKR input rising edge to SCKR output	—	—	—	18.0	—	ns

1 $V_{CORE_VDD} = 1.00 \pm 0.10$ V; $T_J = -40$ °C to 125 °C, $C_L = 50$ pF

2 In the “Characteristics” column, bl = bit length, wl = word length, wr = word length relative

3 In the “Expression” column, $T_C = 7.5$ ns.

4 For the internal clock, the external clock cycle is defined by Icyc and the ESAI control register.

5 The word-relative frame sync signal waveform relative to the clock operates in the same manner as the bit-length frame sync signal waveform, but spreads starting from one serial clock before the first bit clock (same as the bit length frame sync signal), until the second-to-last bit-clock of the first word in the frame.

6 Periodically sampled and not 100% tested.

3.7.8 Enhanced Secured Digital Host Controller (eSDHCv2) Timing

Figure 54 shows eSDHCv2 timing, and Table 61 describes the timing parameters (SD1–SD8) used in the figure. The following definitions apply to values and signals described in Table 61:

- LS: low-speed mode. Low-speed card can tolerate clocks up to 400 kHz
- FS: full-speed mode. Full-speed MMC card’s clock can reach 20 MHz; full speed SD/SDIO card clock can reach 25 MHz
- HS: high-speed mode. High-speed MMC card’s clock can reach 52 MHz; SD/SDIO card clock can reach 50 MHz

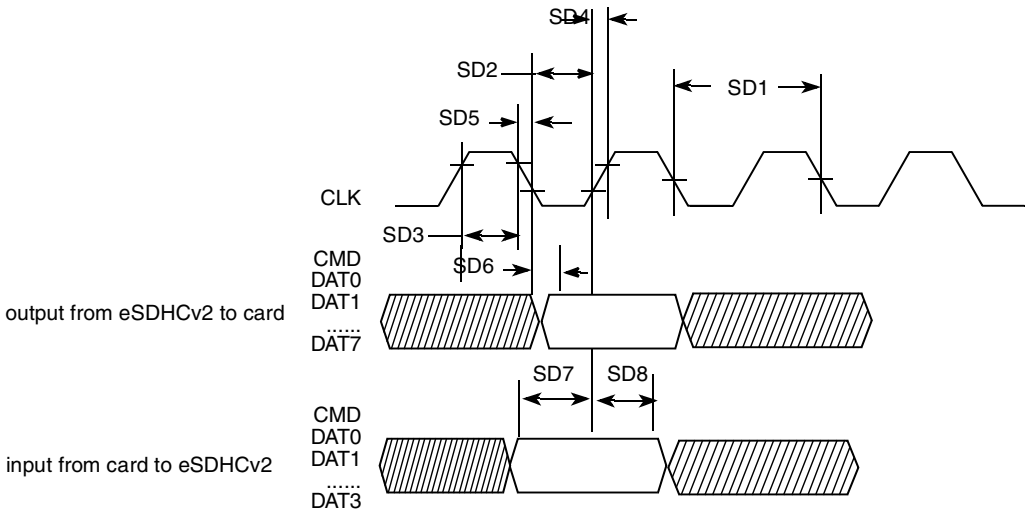

Figure 54. eSDHCv2 Timing

Table 61. eSDHCv2 Interface Timing Specification

ID	Parameter	Symbols	Min.	Max.	Unit
Card Input Clock					
SD1	Clock frequency (low speed)	f_{PP}[1]	0	400	kHz
	Clock frequency (SD/SDIO full speed/high speed)	f_{PP}[2]	0	25/50	MHz
	Clock frequency (MMC full speed/high speed)	f_{PP}[3]	0	20/52	MHz
	Clock frequency (identification mode)	f_{OD}	100	400	kHz
SD2	Clock low time	t_{WL}	6.5	—	ns
SD3	Clock high time	t_{WH}	6.5	—	ns
SD4	Clock rise time	t_{TLH}	—	3	ns
SD5	Clock fall time	t_{THL}	—	3	ns
eSDHC Output / Card Inputs CMD, DAT (Reference to CLK)					
SD6	eSDHC output delay	t_{OD}	–3	3	ns
eSDHC Input / Card Outputs CMD, DAT (Reference to CLK)					
SD7	eSDHC input setup time	t_{ISU}	2.5	—	ns
SD8	eSDHC input hold time	t_{IH}[4]	2.5	—	ns

[1] In low-speed mode, card clock must be lower than 400 kHz, voltage ranges from 2.7 to 3.6 V.

[2] In normal-speed mode for SD/SDIO card, clock frequency can be any value between 0 ~ 25 MHz. In high speed mode, clock frequency can be any value between 0 ~ 50 MHz.

[3] In normal-speed mode for MMC card, clock frequency can be any value between 0 ~ 20 MHz. In high speed mode, clock frequency can be any value between 0 ~ 52 MHz.

[4] To satisfy hold timing, the delay difference between clock input and cmd/data input must not exceed 2 ns.

3.7.9 Fast Ethernet Controller (FEC) Timing

The FEC is designed to support both 10- and 100-Mbps Ethernet networks compliant with the IEEE 802.3 standard. An external transceiver interface and transceiver function are required to complete the interface to the media. The FEC supports 10/100 Mbps MII (18 pins altogether), 10/100 Mbps RMII (ten pins, including serial management interface) and the 10-Mbps-only 7-Wire interface (which uses seven of the MII pins), for connection to an external Ethernet transceiver. All signals are compatible with transceivers operating at a voltage of 3.3 V.

The following subsections describe the timing for MII and RMII modes.

3.7.9.1 FEC MII Mode Timing

The following subsections describe MII receive, transmit, asynchronous inputs, and serial management signal timings.

3.7.9.1.4 MII Receive Signal Timing (FEC_RXD[3:0], FEC_RX_DV, FEC_RX_ER, and FEC_RX_CLK)

The receiver functions correctly up to an FEC_RX_CLK maximum frequency of 25 MHz + 1%. There is no minimum frequency requirement. Additionally, the processor clock frequency must exceed twice the FEC_RX_CLK frequency.

Figure 55 shows MII receive signal timings. Table 62 describes the timing parameters (M1–M4) shown in the figure.

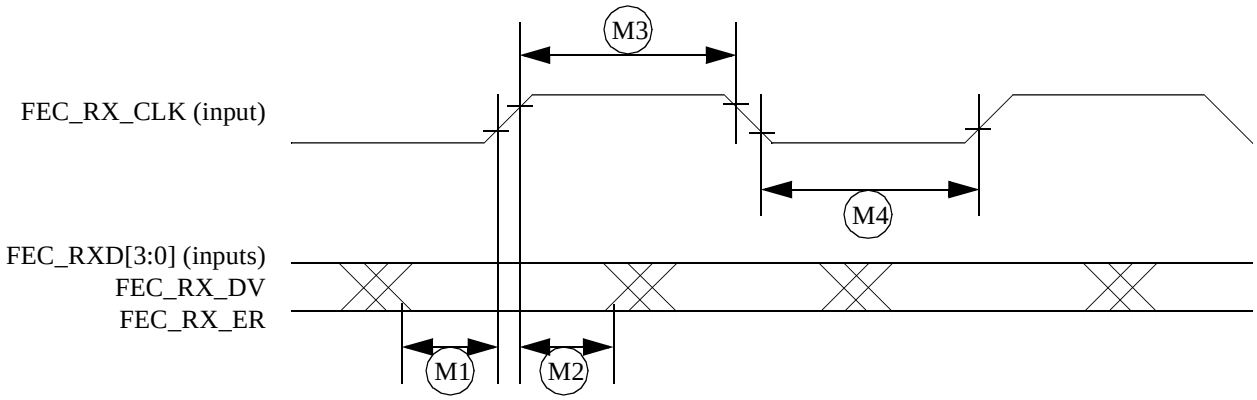

Figure 55. MII Receive Signal Timing Diagram

Table 62. MII Receive Signal Timing

ID	Characteristic[1]	Min.	Max.	Unit
M1	FEC_RXD[3:0], FEC_RX_DV, FEC_RX_ER to FEC_RX_CLK setup	5	—	ns
M2	FEC_RX_CLK to FEC_RXD[3:0], FEC_RX_DV, FEC_RX_ER hold	5	—	ns
M3	FEC_RX_CLK pulse width high	35%	65%	FEC_RX_CLK period
M4	FEC_RX_CLK pulse width low	35%	65%	FEC_RX_CLK period

[1] FEC_RX_DV, FEC_RX_CLK, and FEC_RXD0 have the same timing in 10 Mbps 7-wire interface mode.

3.7.9.1.5 MII Transmit Signal Timing (FEC_TXD[3:0], FEC_TX_EN, FEC_TX_ER, and FEC_TX_CLK)

The transmitter functions correctly up to an FEC_TX_CLK maximum frequency of 25 MHz + 1%. There is no minimum frequency requirement. Additionally, the processor clock frequency must exceed twice the FEC_TX_CLK frequency.

Figure 56 shows MII transmit signal timings. Table 63 describes the timing parameters (M5–M8) shown in the figure.

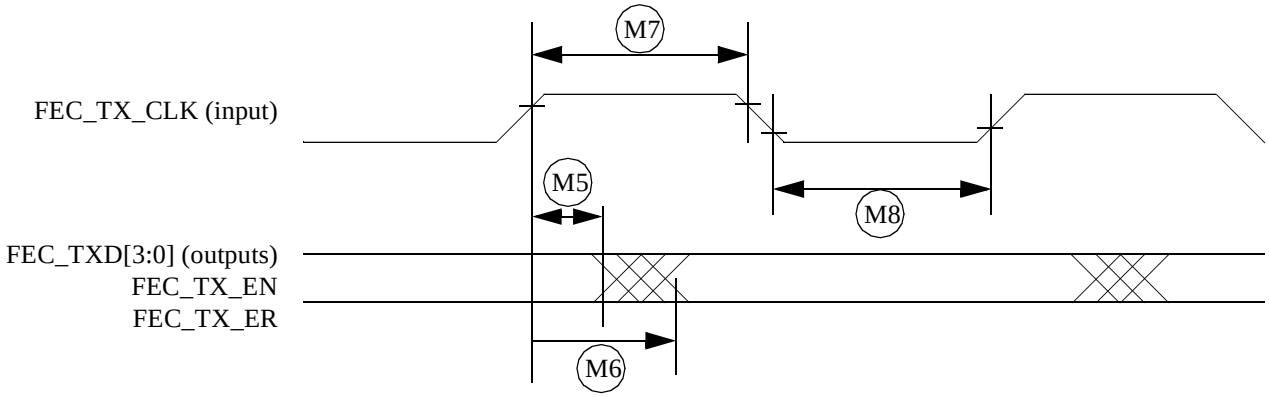

Figure 56. MII Transmit Signal Timing Diagram

Table 63. MII Transmit Signal Timing

ID	Characteristic[1]	Min.	Max.	Unit
M5	FEC_TX_CLK to FEC_TXD[3:0], FEC_TX_EN, FEC_TX_ER invalid	5	—	ns
M6	FEC_TX_CLK to FEC_TXD[3:0], FEC_TX_EN, FEC_TX_ER valid	—	20	ns
M7	FEC_TX_CLK pulse width high	35%	65%	FEC_TX_CLK period
M8	FEC_TX_CLK pulse width low	35%	65%	FEC_TX_CLK period

[1] FEC_TX_EN, FEC_TX_CLK, and FEC_TXD0 have the same timing in 10-Mbps 7-wire interface mode.

3.7.9.1.6 MII Asynchronous Inputs Signal Timing (FEC_CRS and FEC_COL)

Figure 57 shows MII asynchronous input timings. Table 64 describes the timing parameter (M9) shown in the figure.

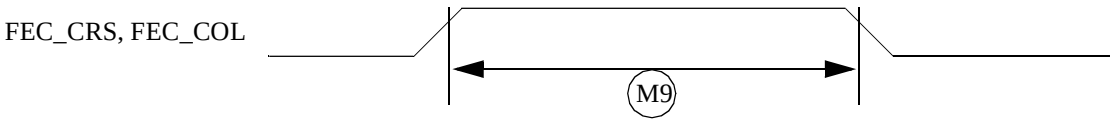

Figure 57. MII Async Inputs Timing Diagram

Table 64. MII Asynchronous Inputs Signal Timing

ID	Characteristic	Min.	Max.	Unit
M9[1]	FEC_CRS to FEC_COL minimum pulse width	1.5	—	FEC_TX_CLK period

[1] FEC_COL has the same timing in 10-Mbit 7-wire interface mode.

3.7.9.2 MII Serial Management Channel Timing (FEC_MDIO and FEC_MDC)

The MDC frequency is designed to be equal to or less than 2.5 MHz to comply with the IEEE 802.3 standard MII specification. However the FEC can function correctly with a maximum MDC frequency of 15 MHz.

Figure 58 shows MII asynchronous input timings. Table 65 describes the timing parameters (M10—M15) shown in the figure.

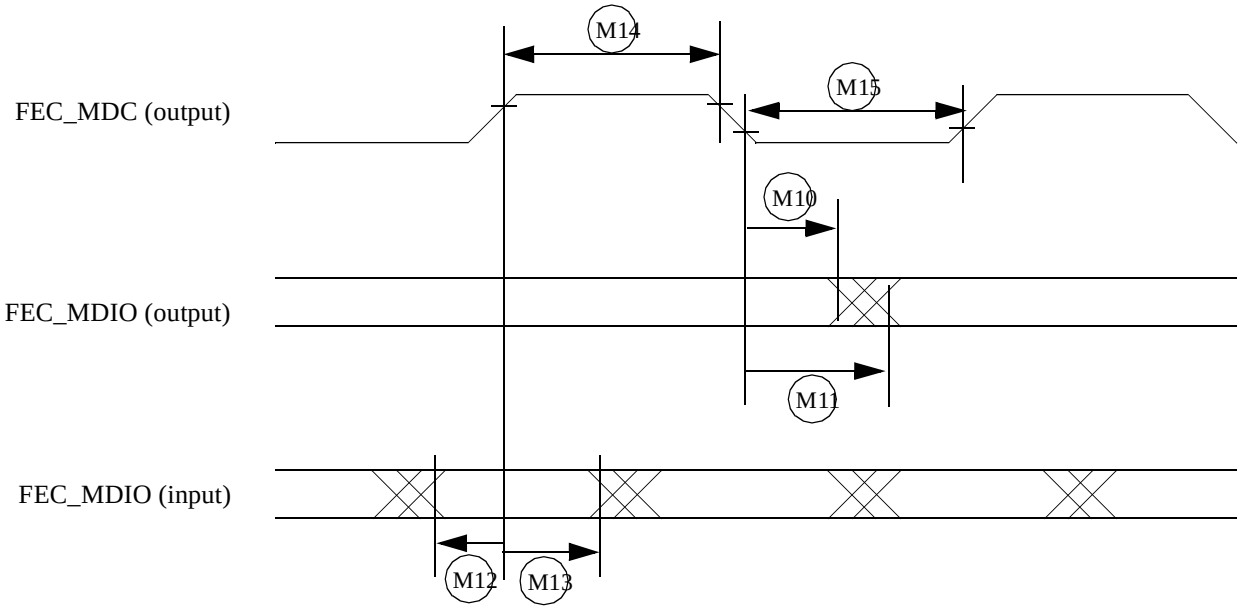

Figure 58. MII Serial Management Channel Timing Diagram

Table 65. MII Serial Management Channel Timing

ID	Characteristic	Min.	Max.	Unit
M10	FEC_MDC falling edge to FEC_MDIO output invalid (min. propagation delay)	0	—	ns
M11	FEC_MDC falling edge to FEC_MDIO output valid (max. propagation delay)	—	5	ns
M12	FEC_MDIO (input) to FEC_MDC rising edge setup	18	—	ns
M13	FEC_MDIO (input) to FEC_MDC rising edge hold	0	—	ns
M14	FEC_MDC pulse width high	40%	60%	FEC_MDC period
M15	FEC_MDC pulse width low	40%	60%	FEC_MDC period

3.7.9.3 RMII Mode Timing

In RMII mode, FEC_TX_CLK is used as the REF_CLK, which is a 50 MHz ± 50 ppm continuous reference clock. FEC_RX_DV is used as the CRS_DV in RMII. Other signals under RMII mode include FEC_TX_EN, FEC_TXD[1:0], FEC_RXD[1:0] and FEC_RX_ER.

Figure 59 shows RMII mode timings. Table 66 describes the timing parameters (M16–M21) shown in the figure.

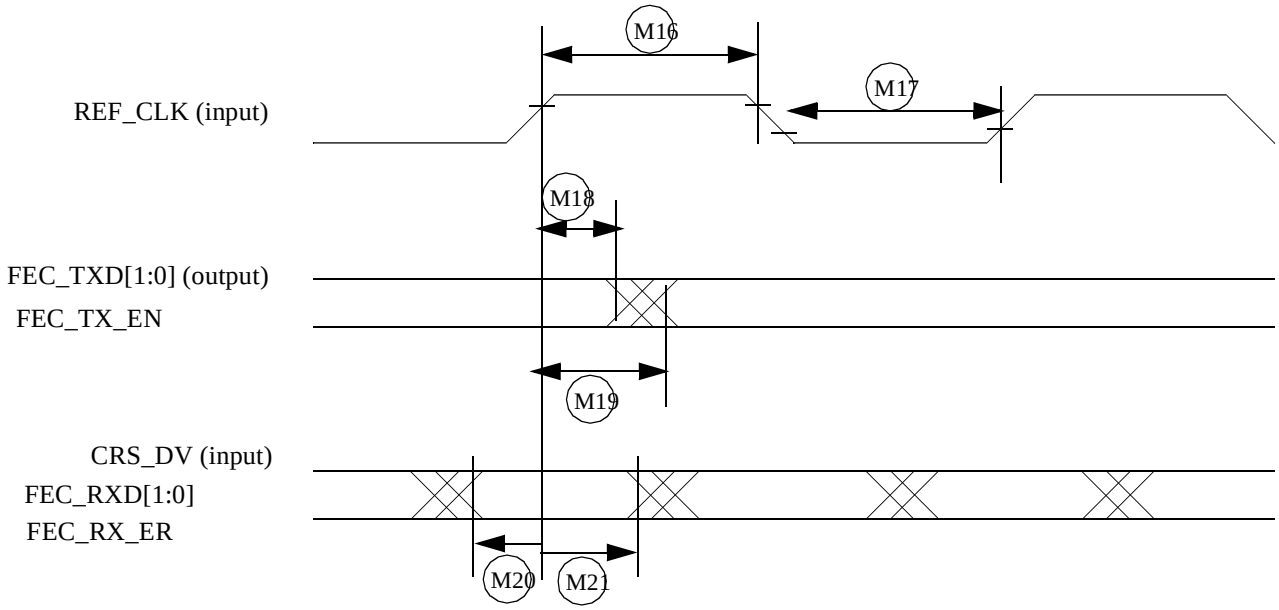

Figure 59. RMII Mode Signal Timing Diagram

Table 66. RMII Signal Timing

ID	Characteristic	Min.	Max.	Unit
M16	REF_CLK(FEC_TX_CLK) pulse width high	35%	65%	REF_CLK period
M17	REF_CLK(FEC_TX_CLK) pulse width low	35%	65%	REF_CLK period
M18	REF_CLK to FEC_TXD[1:0], FEC_TX_EN invalid	3	—	ns
M19	REF_CLK to FEC_TXD[1:0], FEC_TX_EN valid	—	12	ns
M20	FEC_RXD[1:0], CRS_DV(FEC_RX_DV), FEC_RX_ER to REF_CLK setup	2	—	ns
M21	REF_CLK to FEC_RXD[1:0], FEC_RX_DV, FEC_RX_ER hold	2	—	ns

3.7.10 Controller Area Network (FlexCAN) Transceiver Parameters and Timing

Table 67 and Table 68 show voltage requirements for the FlexCAN transceiver Tx and Rx pins.

Table 67. Tx Pin Characteristics

Parameter	Symbol	Min.	Typ.	Max.	Units
High-level output voltage	V_{OH}	2	—	Vcc[1] + 0.3	V
Low-level output voltage	V_{OL}	—	0.8	—	V

[1] Vcc = +3.3 V ± 5%

Table 68. Rx Pin Characteristics

Parameter	Symbol	Min.	Typ.	Max.	Units
High-level input voltage	V_{IH}	0.8 × Vcc[1]	—	Vcc[1]	V
Low-level input voltage	V_{IL}	—	0.4	—	V

[1] Vcc = +3.3 V ± 5%

Figure 60 through Figure 63 show the FlexCAN timing, including timing of the standby and shutdown signals.

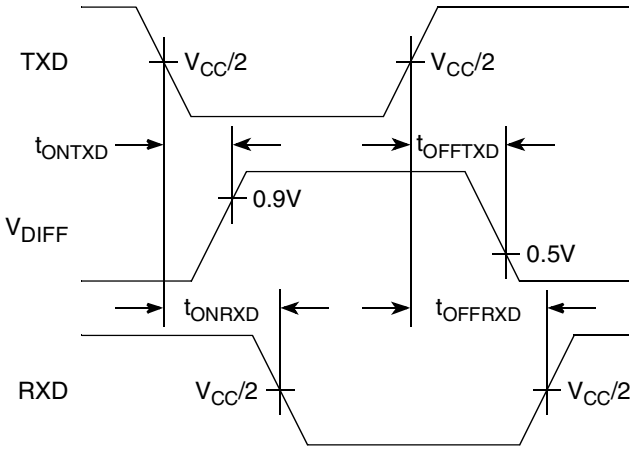

Figure 60. FlexCAN Timing Diagram

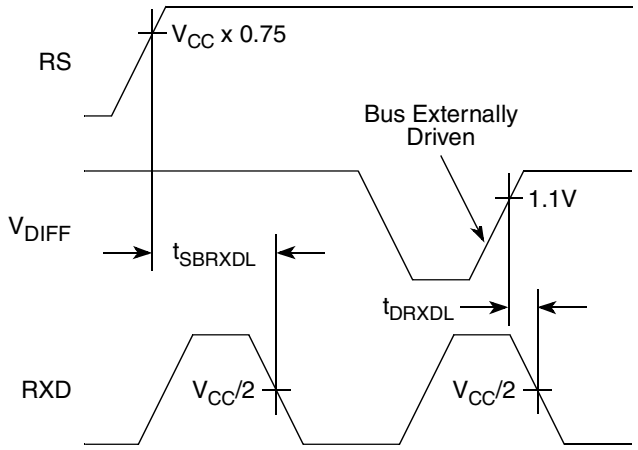

Figure 61. Timing Diagram for FlexCAN Standby Signal

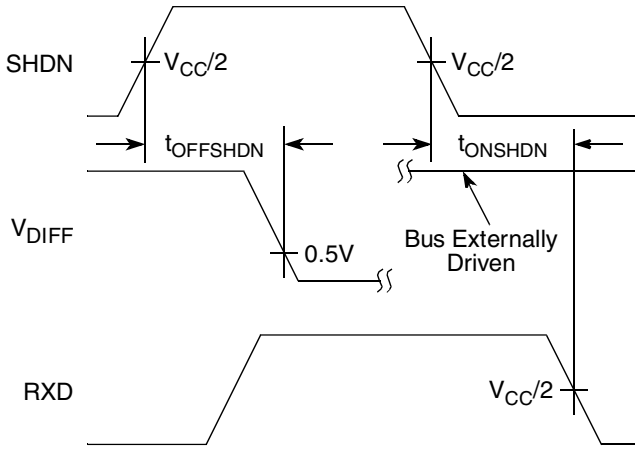

Figure 62. Timing Diagram for FlexCAN Shutdown Signal

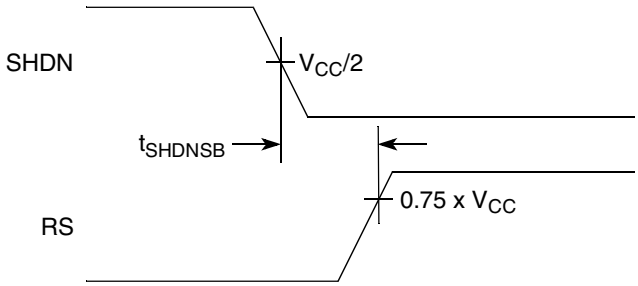

Figure 63. Timing Diagram for FlexCAN Shutdown-to-Standby Signal

Because integer multiples are not possible, taking into account the range of frequencies at which the SoC has to operate, DPLLs work in FOL mode only.

3.7.11 Inter IC Communication (I^2C) Timing

The I^2C communication protocol consists of the following seven elements:

- Start
- Data source/recipient
- Data direction
- Slave acknowledge
- Data
- Data acknowledge
- Stop

Figure 64 shows the timing of the I^2C module. Table 69 and Table 70 describe the I^2C module timing parameters (IC1–IC6) shown in the figure.

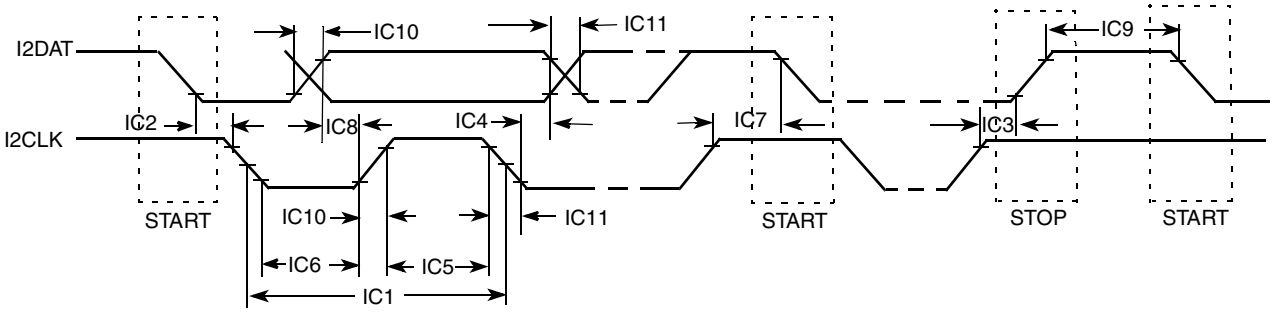

Figure 64. I^2C Module Timing Diagram

Table 69. I2C Module Timing Parameters: 3.0 V +/–0.30 V

ID	Parameter	Standard Mode		Fast Mode		Unit
		Min.	Max.	Min.	Max.	
IC1	I2CLK cycle time	10	-	2.5		µs
IC2	Hold time (repeated) START condition	4.0	-	0.6	-	µs
IC3	Set-up time for STOP condition	4.0	-	0.6	-	µs
IC4	Data hold time	0[1]	3.45[2]	0[1]	0.9[2]	µs
IC5	HIGH Period of I2CLK Clock	4.0	-	0.6	-	µs
IC6	LOW Period of the I2CLK Clock	4.7	-	1.3	-	µs
IC7	Set-up time for a repeated START condition	4.7	-	0.6	-	µs
IC8	Data set-up time	250	-	100[3]	-	ns
IC9	Bus free time between a STOP and START condition	4.7	-	1.3	-	µs
IC10	Rise time of both I2DAT and I2CLK signals	-	1000	$20+0.1C_b$[4]	300	ns
IC11	Fall time of both I2DAT and I2CLK signals	-	300	$20+0.1C_b$[4]	300	ns
IC12	Capacitive load for each bus line (C_b)	-	400	-	400	pF

[1] A device must internally provide a hold time of at least 300 ns for I2DAT signal in order to bridge the undefined region of the falling edge of I2CLK.

[2] The maximum hold time has only to be met if the device does not stretch the LOW period (ID no IC5) of the I2CLK signal

[3] A Fast-mode I2C-bus device can be used in a Standard-mode I2C-bus system, but the requirement of Set-up time (ID No IC7) of 250 ns must then be met. This is automatically the case if the device does not stretch the LOW period of the I2CLK signal.

If such a device does stretch the LOW period of the I2CLK signal, it must output the next data bit to the I2DAT line max_rise_time(ID No IC9) + data_setup_time(ID No IC7) = 1000 + 250 = 1250 ns (according to the Standard-mode I2C-bus specification) before the I2CLK line is released.

[4] C_b = total capacitance of one bus line in pF.

Table 70. I2C Module Timing Parameters: 1.8 V +/– 0.10 V

ID	Parameter	Standard Mode		Unit
		Min.	Max.	
IC1	I2CLK cycle time	10	-	µs
IC2	Hold time (repeated) START condition	4.0	-	µs
IC3	Set-up time for STOP condition	4.0	-	µs
IC4	Data hold time	0[1]	3.45[2]	µs
IC5	HIGH Period of I2CLK Clock	4.0	-	µs
IC6	LOW Period of the I2CLK Clock	4.7	-	µs
IC7	Set-up time for a repeated START condition	4.7	-	µs
IC8	Data set-up time	250	-	ns
IC9	Bus free time between a STOP and START condition	4.7	-	µs
IC10	Rise time of both I2DAT and I2CLK signals	-	1000	ns
IC11	Fall time of both I2DAT and I2CLK signals	-	300	ns
IC12	Capacitive load for each bus line (C_b)	-	400	pF

[1] A device must internally provide a hold time of at least 300 ns for I2DAT signal in order to bridge the undefined region of the falling edge of I2CLK.

[2] The maximum hold time has only to be met if the device does not stretch the LOW period (ID no IC5) of the I2CLK signal

3.7.12 Liquid Crystal Display Controller (LCDC) Timing

Figure 65 and Figure 66 show LCDC timing in non-TFT and TFT mode respectively, and Table 71 and Table 72 list the timing parameters used in the associated figures.

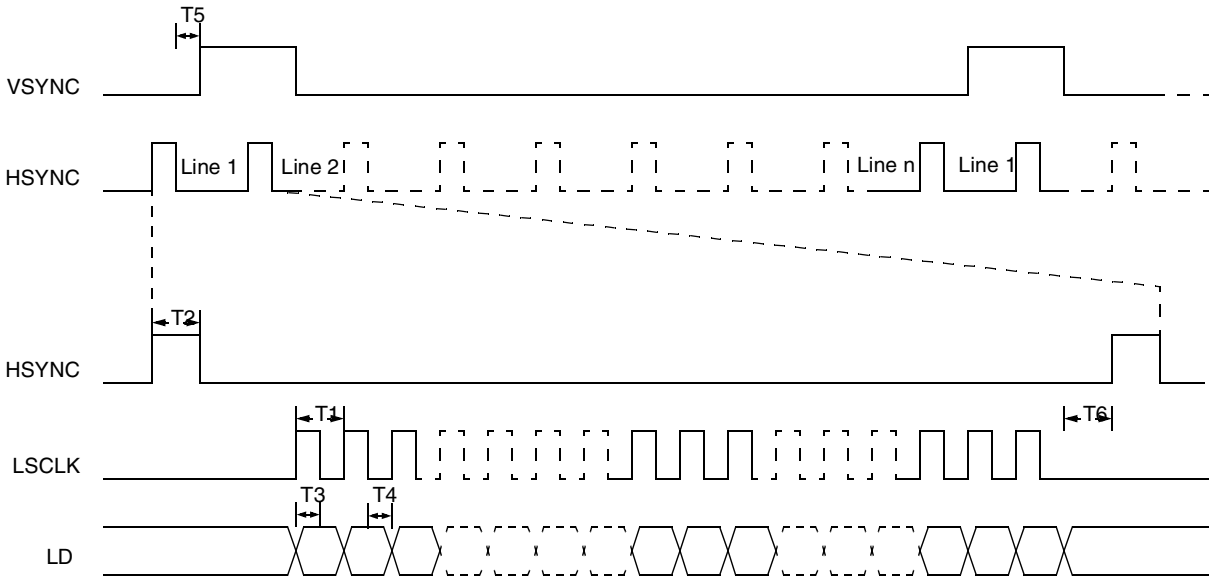

Figure 65. LCDC Non-TFT Mode Timing Diagram

Table 71. LCDC Non-TFT Mode Timing Parameters

ID	Description	Min.	Max.	Unit
T1	Pixel clock period	22.5	1000	ns
T2	HSYNC width	1	—	T[1]
T3	LD setup time	5	—	ns
T4	LD hold time	5	—	ns
T5	Wait between HSYNC and VSYNC rising edge	2	—	T[1]
T6	Wait between last data and HSYNC rising edge	1	—	T[1]

[1] T is pixel clock period

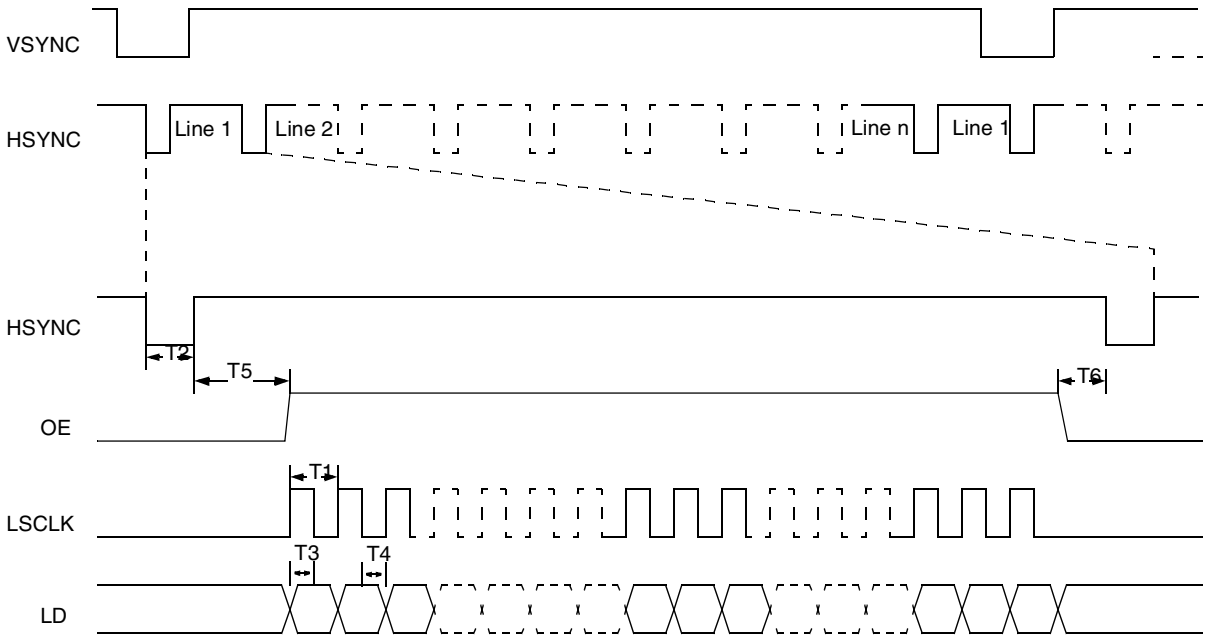

Figure 66. LCDC TFT Mode Timing Diagram

Table 72. LCDC TFT Mode Timing Parameters

ID	Description	Min.	Ma	Unit
T1	Pixel clock period	22.5	1000	ns
T2	HSYNC width	1	—	T[1]
T3	LD setup time	5	—	ns
T4	LD hold time	5	—	ns
T5	Delay from the end of HSYNC to the beginning of the OE pulse	3	—	T[1]
T6	Delay from end of OE to the beginning of the HSYNC pulse	1	—	T[1]

[1] T is pixel clock period

3.7.13 Pulse Width Modulator (PWM) Timing Parameters

Figure 67 depicts the timing of the PWM, and Table 73 lists the PWM timing characteristics.

The PWM can be programmed to select one of three clock signals as its source frequency. The selected clock signal is passed through a prescaler before being input to the counter. The output is available at the pulse width modulator output (PWMO) external pin.

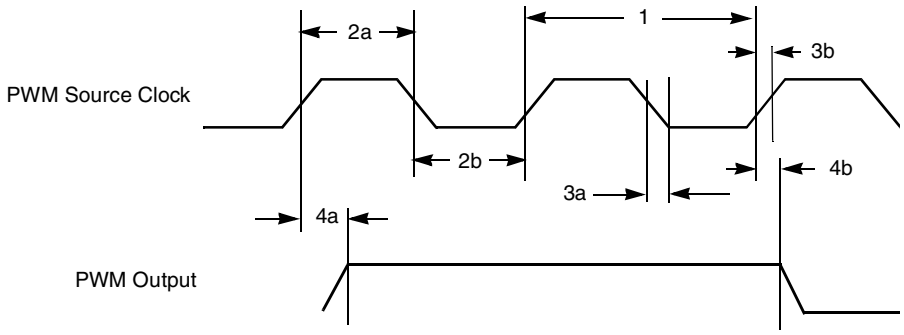

Figure 67. PWM Timing

Table 73. PWM Output Timing Parameter

Ref No.	Parameter	Minimum	Maximum	Unit
1	System CLK frequency[1]	0	ipg_clk	MHz
2a	Clock high time	12.29	—	ns
2b	Clock low time	9.91	—	ns
3a	Clock fall time	—	0.5	ns
3b	Clock rise time	—	0.5	ns
4a	Output delay time	—	9.37	ns
4b	Output setup time	8.71	—	ns

[1] CL of PWMO = 30 pF

3.7.14 Subscriber Identity Module (SIM) Timing

Each SIM module interface consists of a total of 12 pins (two separate ports, each containing six signals). Typically a port uses five signals.

The interface is designed to be used with synchronous SIM cards, meaning the SIM module provides the clock used by the SIM card. The clock frequency is typically 372 times the Tx/Rx data rate; however, the SIM module can also work with CLK frequencies of 16 times the Tx/Rx data rate.

There is no timing relationship between the clock and the data. The clock that the SIM module provides to the SIM card is used by the SIM card to recover the clock from the data in the same manner as standard UART data exchanges. All six signals (five for bidirectional Tx/Rx) of the SIM module are asynchronous with each other.

There are no required timing relationships between signals in normal mode. The SIM card is initiated by the interface device; the SIM card responds with Answer to Reset. Although the SIM interface has no defined requirements, the ISO/IEC 7816 defines reset and power-down sequences (for detailed information see ISO/IEC 7816).

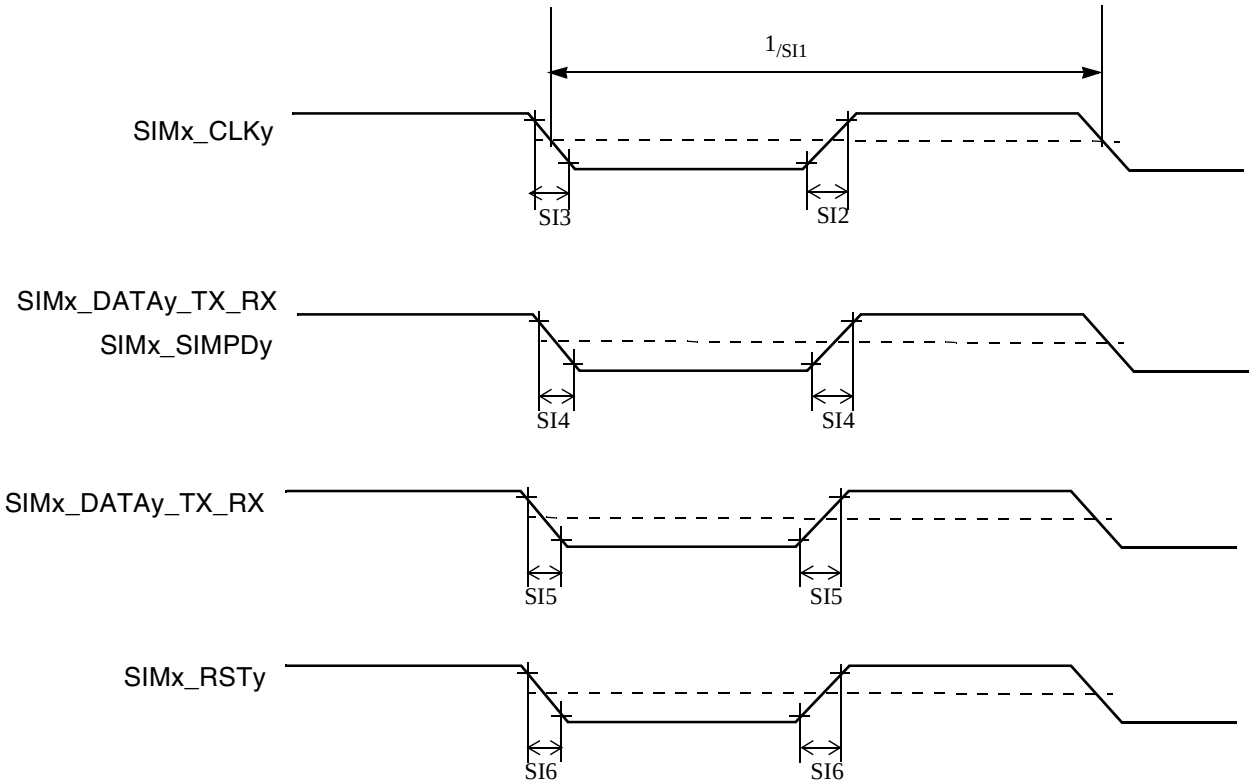

Figure 68. SIM Clock Timing Diagram

Table 74 defines the general timing requirements for the SIM interface.

Table 74. Timing Specifications, High Drive Strength

ID	Parameter	Symbol	Min.	Max.	Unit
SI1	SIM clock frequency (SIMx_CLKy)[1]	S_{freq}	0.01	25	MHz
SI2	SIM clock rise time (SIMx_CLKy)[2]	S_{rise}	—	$0.09 \times (1/S_{freq})$	ns
SI3	SIM clock fall time (SIMx_CLKy)[3]	S_{fall}	—	$0.09 \times (1/S_{freq})$	ns
SI4	SIM input transition time (SIMx_DATAy_RX_TX, SIMx_SIMPDy)	S_{trans}	10	25	ns
SI5	SIM I/O rise time / fall time (SIMx_DATAy_RX_TX)[4]	Tr/Tf	—	1	µs
SI6	SIM RST rise time / fall time (SIMx_RSTy)[5]	Tr/Tf	—	1	µs

[1] 50% duty cycle clock,
[2] With C = 50 pF
[3] With C = 50 pF
[4] With Cin = 30 pF, Cout = 30 pF,
[5] With Cin = 30 pF,

3.7.14.1 SIM Reset Sequences

SIM cards may have internal reset, or active low reset. The following subset describes the reset sequences in these two cases.

3.7.14.1.1 SIM Cards with Internal Reset

Figure 69 shows the reset sequence for SIM cards with internal reset. The reset sequence comprises the following steps:

- After power-up, the clock signal is enabled on SIM*x*_CLK*y* (time T0)
- After 200 clock cycles, SIM*x*_DATA*y*_RX_TX must be asserted.
- The card must send a response on SIM*x*_DATA*y*_RX_TX acknowledging the reset between 400–40000 clock cycles after T0.

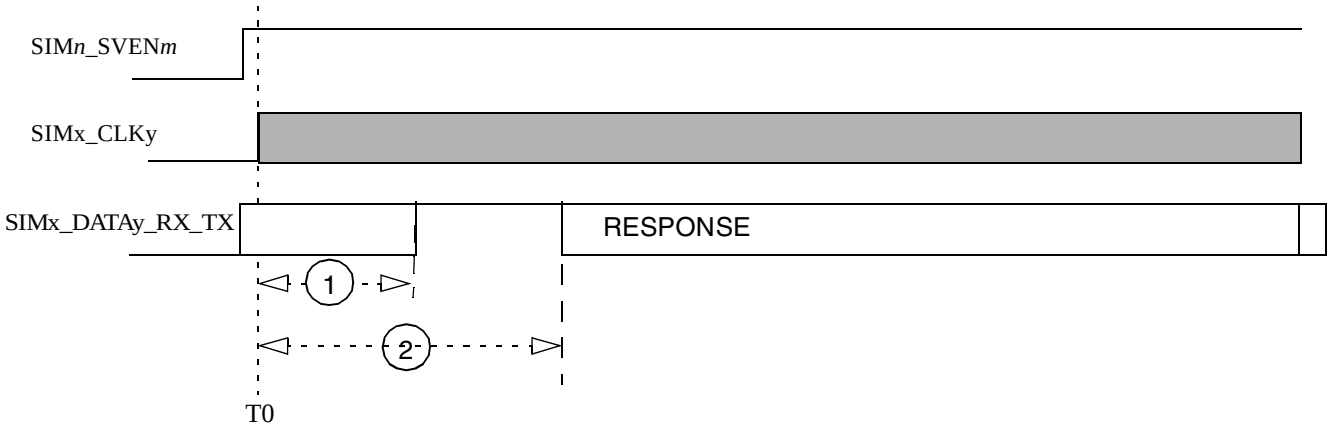

Figure 69. Internal Reset Card Reset Sequence

Table 75 defines the general timing requirements for the SIM interface.

Table 75. Timing Specifications, Internal Reset Card Reset Sequence

Ref No.	Min.	Max.	Units
1	—	200	clk cycles
2	400	40,000	clk cycles

3.7.14.1.2 SIM Cards with Active Low Reset

Figure 70 shows the reset sequence for SIM cards with active low reset. The reset sequence comprises the following steps:

- After power-up, the clock signal is enabled on SIM*x*_CLK*y* (time T0)
- After 200 clock cycles, SIM*x*_DATA*y*_RX_TX must be asserted.
- SIM*x*_RST*y* must remain low for at least 40,000 clock cycles after T0 (no response is to be received on RX during those 40,000 clock cycles)
- SIM*x*_RST*y* is asserted (at time T1)
- SIM*x*_RST*y* must remain asserted for at least 40,000 clock cycles after T1, and a response must be received on SIM*x*_DATA*y*_RX_TX between 400 and 40,000 clock cycles after T1.

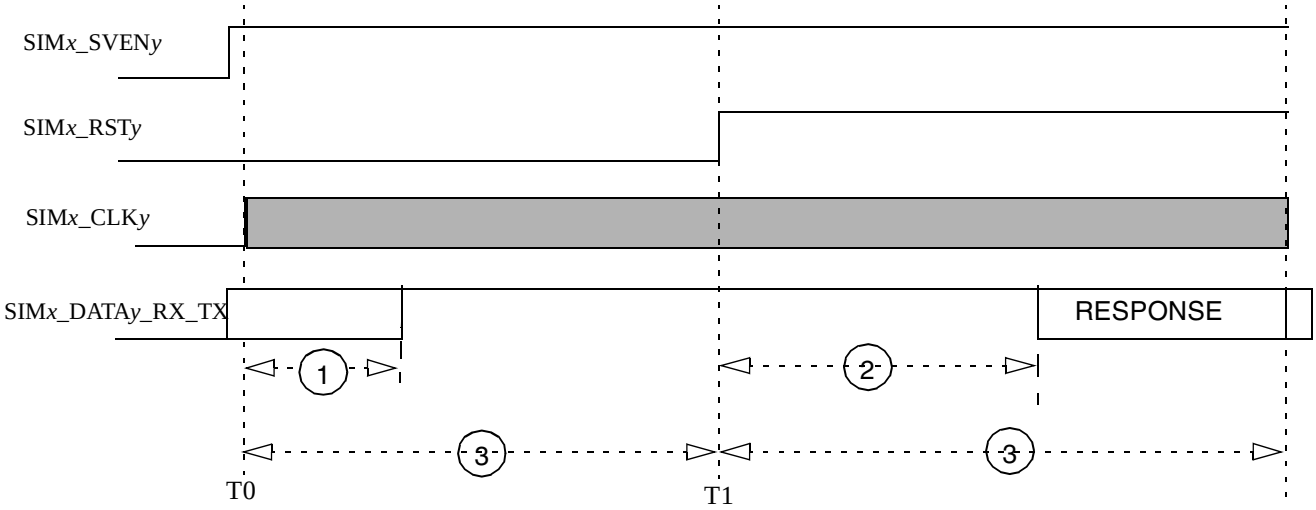

Figure 70. Active-Low-Reset SIM Card Reset Sequence

Table 76 defines the general timing requirements for the SIM interface.

Table 76. Timing Specifications, Active-Low-Reset SIM Card Reset Sequence

Ref No.	Min.	Max.	Unit
1	—	200	clk cycles
2	400	40,000	clk cycles
3	40,000	—	clk cycles

3.7.14.2 SIM Power-Down Sequence

Figure 71 shows the SIM interface power-down AC timing diagram. Table 77 shows the timing requirements for parameters (SI7–SI10) shown in the figure.

The power-down sequence for the SIM interface is as follows:

- SIM*x*_SIMPD*y* port detects the removal of the SIM Card
- SIM*x*_RST*y* is negated
- SIM*x*_CLK*y* is negated
- SIM*x*_DATA*y*_RX_TX is negated
- SIM*x*_SVEN*y* is negated

Each of the above steps requires one CKIL period (usually 32 kHz). Power-down may be initiated by a SIM card removal detection; or it may be launched by the processor.

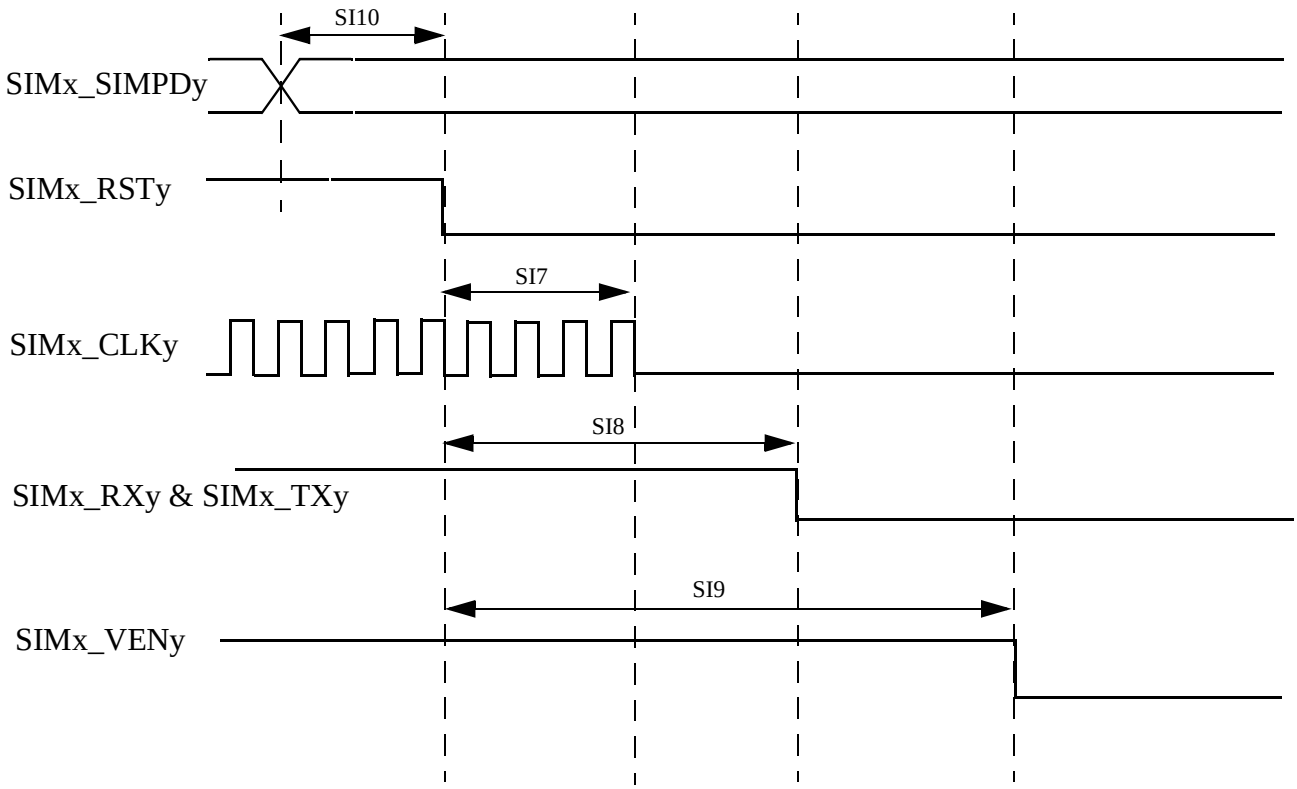

Figure 71. SmartCard Interface Power Down AC Timing

Table 77. Timing Requirements for Power-down Sequence

ID	PARAMETER	SYMBOL	Min.	Max.	Unit
SI7	SIM reset to SIM clock stop	$S_{rst2clk}$	0.9 × 1/Fckil	1.1 × 1/Fckil	ns
SI8	SIM reset to SIM Tx data low	$S_{rst2dat}$	1.8 × 1/Fckil	2.2 × 1/Fckil	ns
SI9	SIM reset to SIM voltage enable low	$S_{rst2ven}$	2.7 × 1/Fckil	3.3 × 1/Fckil	ns
SI10	SIM presence detect to SIM reset low	S_{pd2rst}	0.9 × 1/Fckil	1.1 × 1/Fckil	ns

3.7.15 System JTAG Controller (SJC) Timing

Figure 72 through Figure 75 show respectively the test clock input, boundary scan, test access port, and $\overline{\text{TRST}}$ timings for the SJC. Table 78 describes the SJC timing parameters (SJ1–SJ13) indicated in the figures.

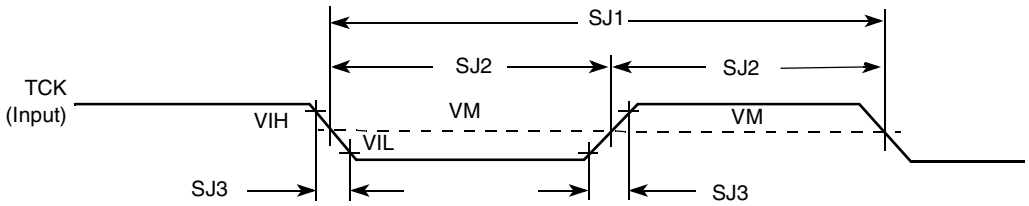

Figure 72. Test Clock Input Timing Diagram

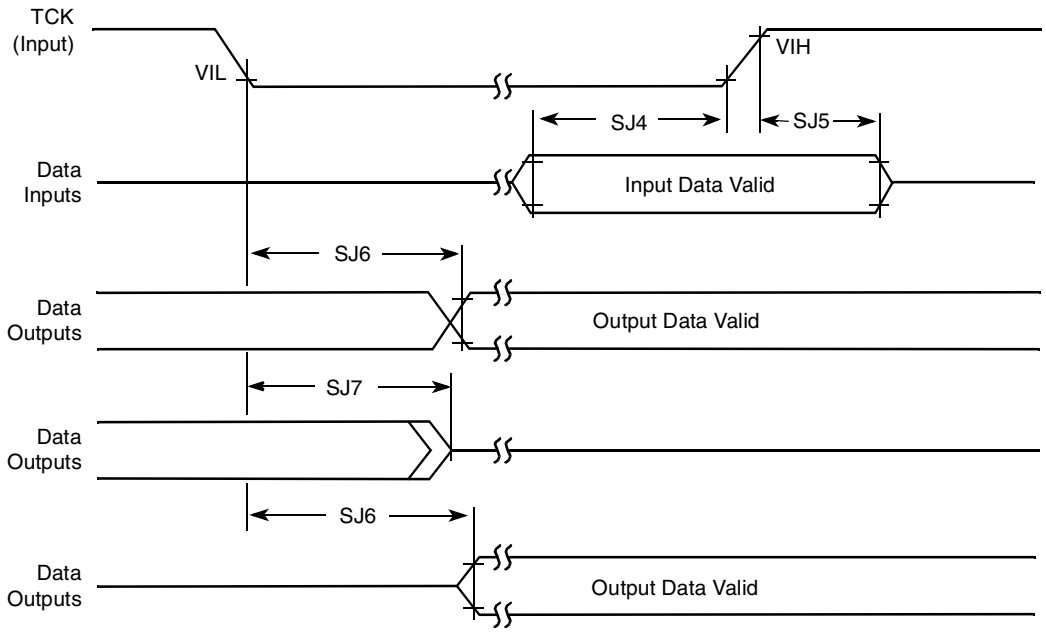

Figure 73. Boundary Scan (JTAG) Timing Diagram

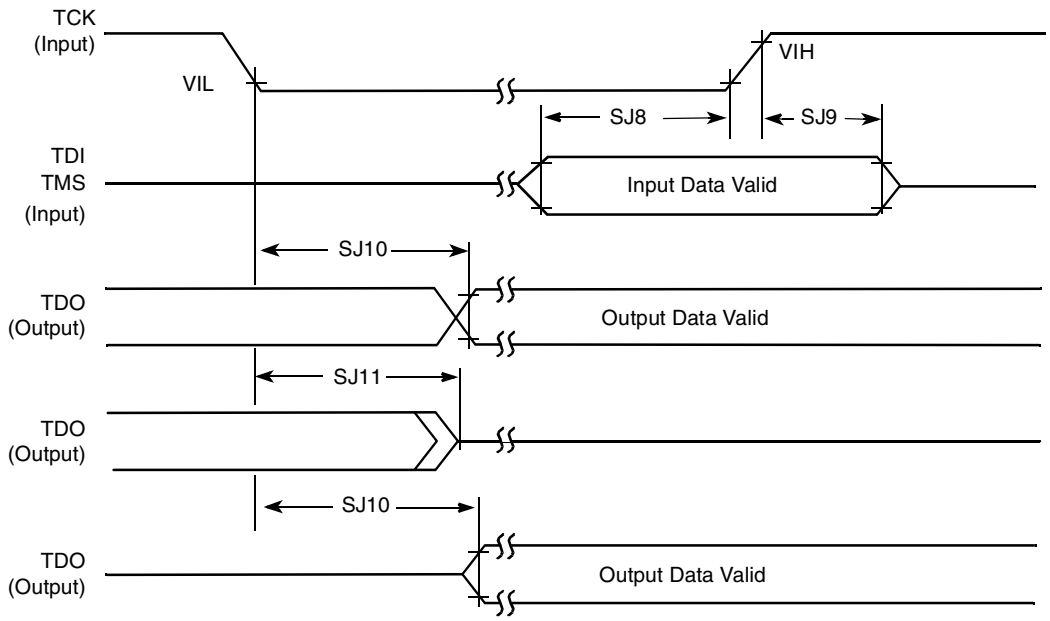

Figure 74. Test Access Port Timing Diagram

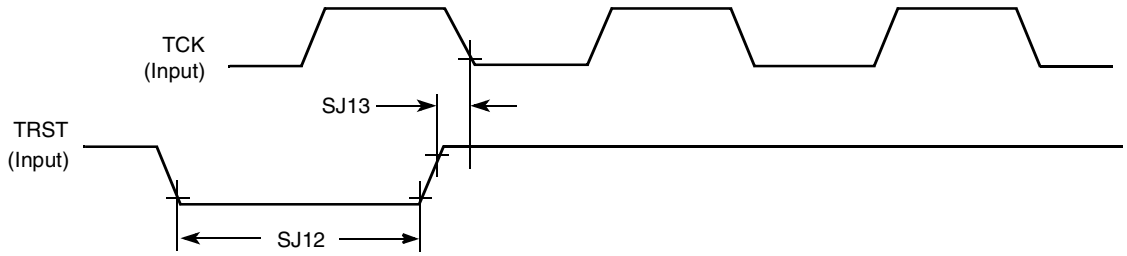

Figure 75. $\overline{\text{TRST}}$ Timing Diagram

Table 78. SJC Timing Parameters

ID	Parameter	All Frequencies		Unit
		Min.	Max.	
SJ1	TCK cycle time	100[1]	—	ns
SJ2	TCK clock pulse width measured at V_M[2]	40	—	ns
SJ3	TCK rise and fall times	—	3	ns
SJ4	Boundary scan input data set-up time	10	—	ns
SJ5	Boundary scan input data hold time	50	—	ns
SJ6	TCK low to output data valid	—	50	ns
SJ7	TCK low to output high impedance	—	50	ns
SJ8	TMS, TDI data set-up time	10	—	ns
SJ9	TMS, TDI data hold time	50	—	ns
SJ10	TCK low to TDO data valid	—	44	ns
SJ11	TCK low to TDO high impedance	—	44	ns
SJ12	$\overline{\text{TRST}}$ assert time	100	—	ns
SJ13	$\overline{\text{TRST}}$ set-up time to TCK low	40	—	ns

1 In cases where SDMA TAP is put in the chain, the maximum TCK frequency is limited by the maximum ratio of 1:8 of SDMA core frequency to TCK. This implies a maximum frequency of 8.25 MHz (or 121.2 ns) for a 66 MHz IPG clock.

2 V_M – mid point voltage

3.7.16 Smart Liquid Crystal Display Controller (SLCDC)

Figure 76 and Figure 77 show SLCDC timing for serial and parallel transfers respectively. Table 79 and Table 80 describe the timing parameters shown in the respective figures.

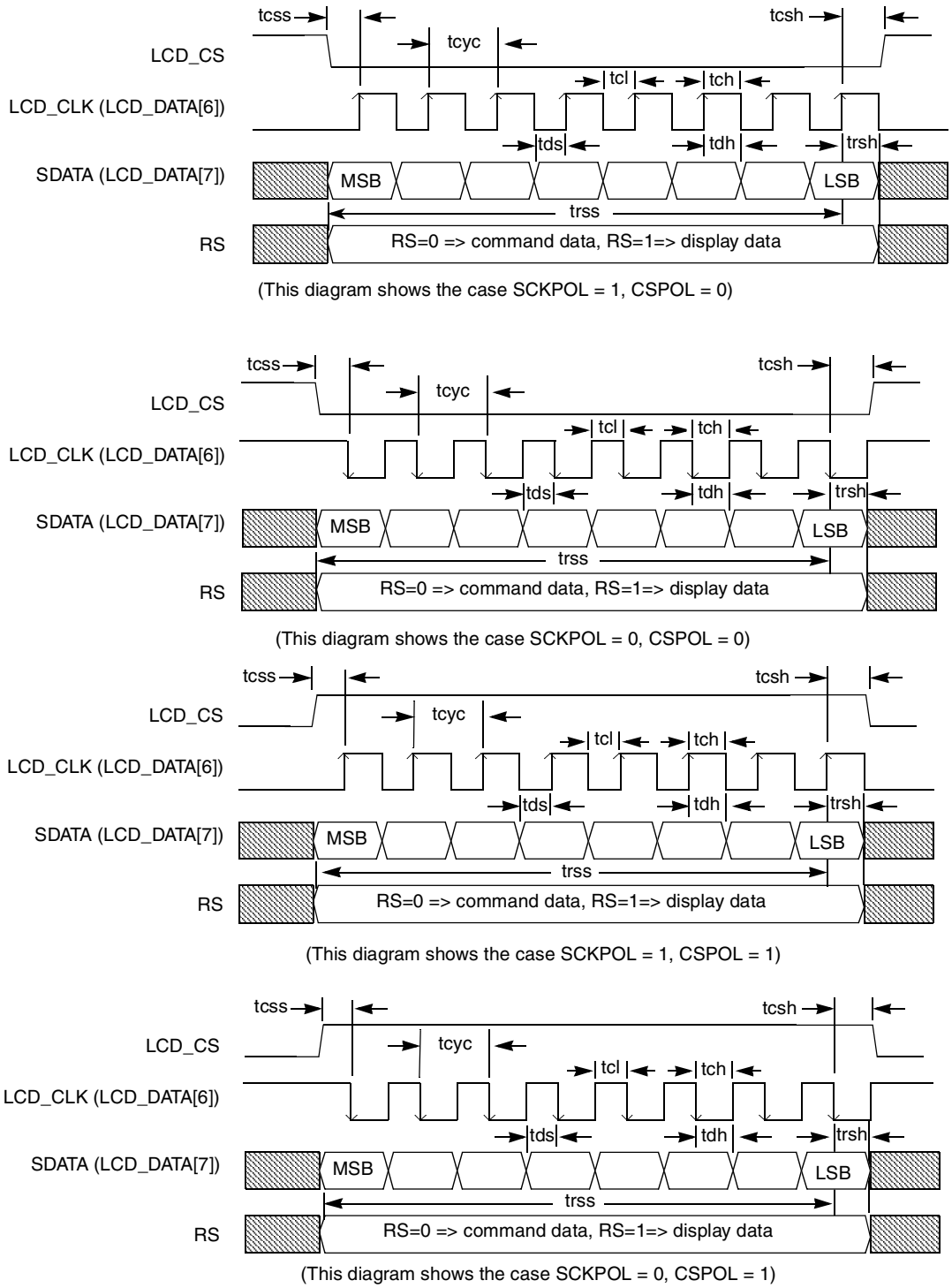

Figure 76. SLCDC Timing Diagram—Serial Transfers to LCD Device

Table 79. SLCDC Serial Interface Timing Parameters

Symbol	Parameter	Min.	Typ.	Max.	Units
t_{css}	Chip select setup time	$(t_{cyc} / 2)$ (±) t_{prop}	—	—	ns
t_{csh}	Chip select hold time	$(t_{cyc} / 2)$ (±) t_{prop}	—	—	ns
t_{cyc}	Serial clock cycle time	39 (±) t_{prop}	—	2641	ns
t_{cl}	Serial clock low pulse	18 (±) t_{prop}	—	—	ns
t_{ch}	Serial clock high pulse	18 (±) t_{prop}	—	—	ns
t_{ds}	Data setup time	$(t_{cyc} / 2)$ (±) t_{prop}	—	—	ns
t_{dh}	Data hold time	$(t_{cyc} / 2)$ (±) t_{prop}	—	—	ns
t_{rss}	Register select setup time	$(15 \times t_{cyc} / 2)$ (±) t_{prop}	—	—	ns
t_{rsh}	Register select hold time	$(t_{cyc} / 2)$ (±) t_{prop}	—	—	ns

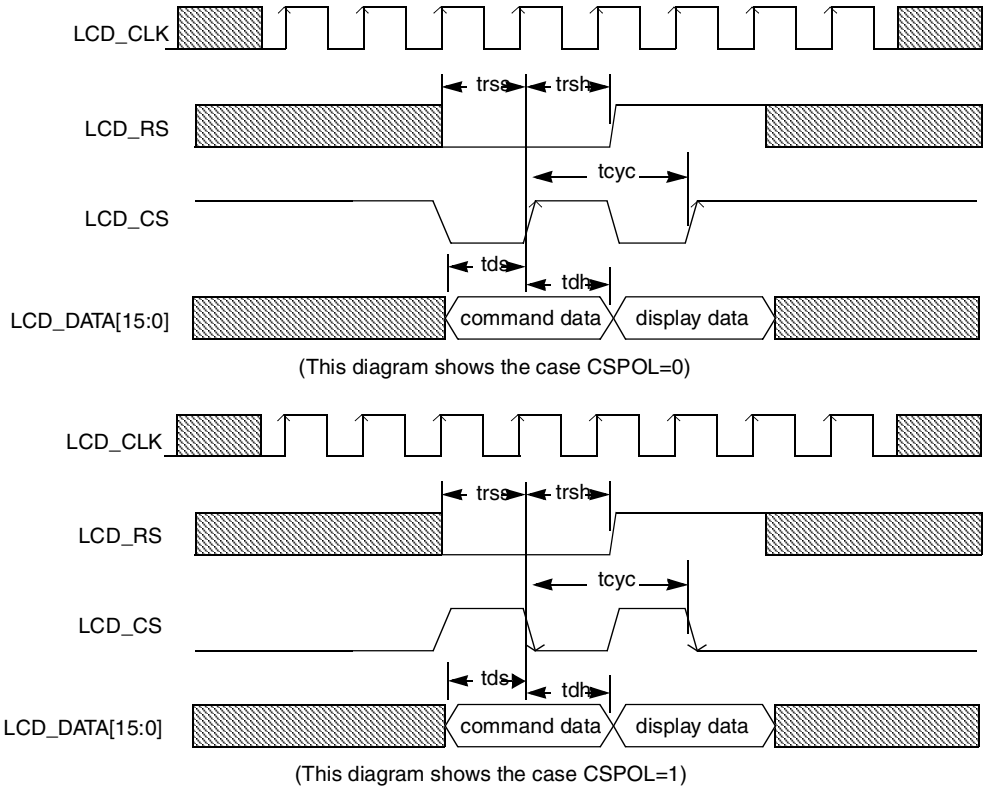

Figure 77. SLCDC Timing Diagram—Parallel Transfers to LCD Device

Table 80. SLCDC Parallel Interface Timing Parameters

Symbol	Parameter	Min.	Typ.	Max.	Units
t_{cyc}	Parallel clock cycle time	78 (±) t_{prop}	—	4923	ns
t_{ds}	Data setup time	(t_{cyc} / 2) (±) t_{prop}	—	—	—
t_{dh}	Data hold time	(t_{cyc} / 2) (±) t_{prop}	—	—	—
t_{rss}	Register select setup time	(t_{cyc} / 2) (±) t_{prop}	—	—	—
t_{rsh}	Register select hold time	(t_{cyc} / 2) (±) t_{prop}	—	—	—

3.7.17 Synchronous Serial Interface (SSI) Timing

The following subsections describe SSI timing in four cases:

- Transmitter with external clock
- Receiver with external clock
- Transmitter with internal clock
- Receiver with internal clock

3.7.17.1 SSI Transmitter Timing with Internal Clock

Figure 78 shows the timing for SSI transmitter with internal clock, and Table 81 describes the timing parameters (SS1–SS52).

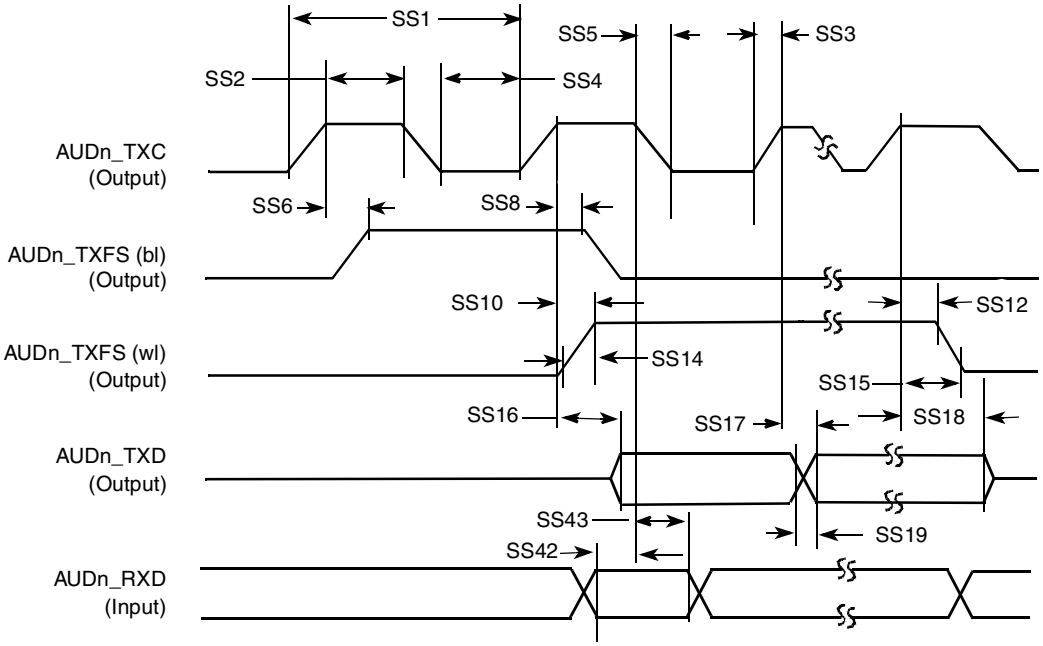

Note: SRXD Input in Synchronous mode only

Figure 78. SSI Transmitter with Internal Clock Timing Diagram

Table 81. SSI Transmitter Timing with Internal Clock

ID	Parameter	Min.	Max.	Unit
Internal Clock Operation				
SS1	(Tx/Rx) CK clock period	81.4	—	ns
SS2	(Tx/Rx) CK clock high period	36.0	—	ns
SS3	(Tx/Rx) CK clock rise time	—	6.0	ns
SS4	(Tx/Rx) CK clock low period	36.0	—	ns
SS5	(Tx/Rx) CK clock fall time	—	6.0	ns
SS6	(Tx) CK high to FS (bl) high	—	15.0	ns
SS8	(Tx) CK high to FS (bl) low	—	15.0	ns
SS10	(Tx) CK high to FS (wl) high	—	15.0	ns
SS12	(Tx) CK high to FS (wl) low	—	15.0	ns
SS14	(Tx/Rx) internal FS rise time	—	6.0	ns
SS15	(Tx/Rx) internal FS fall time	—	6.0	ns
SS16	(Tx) CK high to STXD valid from high impedance	—	15.0	ns
SS17	(Tx) CK high to STXD high/low	—	15.0	ns
SS18	(Tx) CK high to STXD high impedance	—	15.0	ns
SS19	STXD rise/fall time	—	6.0	ns
Synchronous Internal Clock Operation				
SS42	SRXD setup before (Tx) CK falling	10.0	—	ns
SS43	SRXD hold after (Tx) CK falling	0.0	—	ns
SS52	Loading	—	25.0	pf

Note:

- All the timings for the SSI are given for a non-inverted serial clock polarity (TSCKP/RSCKP = 0) and a non-inverted frame sync (TFSI/RFSI = 0). If the polarity of the clock and/or the frame sync have been inverted, all the timing remains valid by inverting the clock signal STCK/SRCK and/or the frame sync STFS/SRFS shown in the tables and in the figures.
- All timings are on pads when SSI is being used for a data transfer.
- ”Tx” and “Rx” refer, respectively, to the transmit and receive sections of the SSI.
- For internal frame sync operation using external clock, the FS timing is the same as that of Tx data (for example, during AC97 mode of operation).

3.7.17.2 SSI Receiver Timing with Internal Clock

Figure 79 shows the timing for the SSI receiver with internal clock. Table 82 describes the timing parameters (SS1–SS51) shown in the figure.

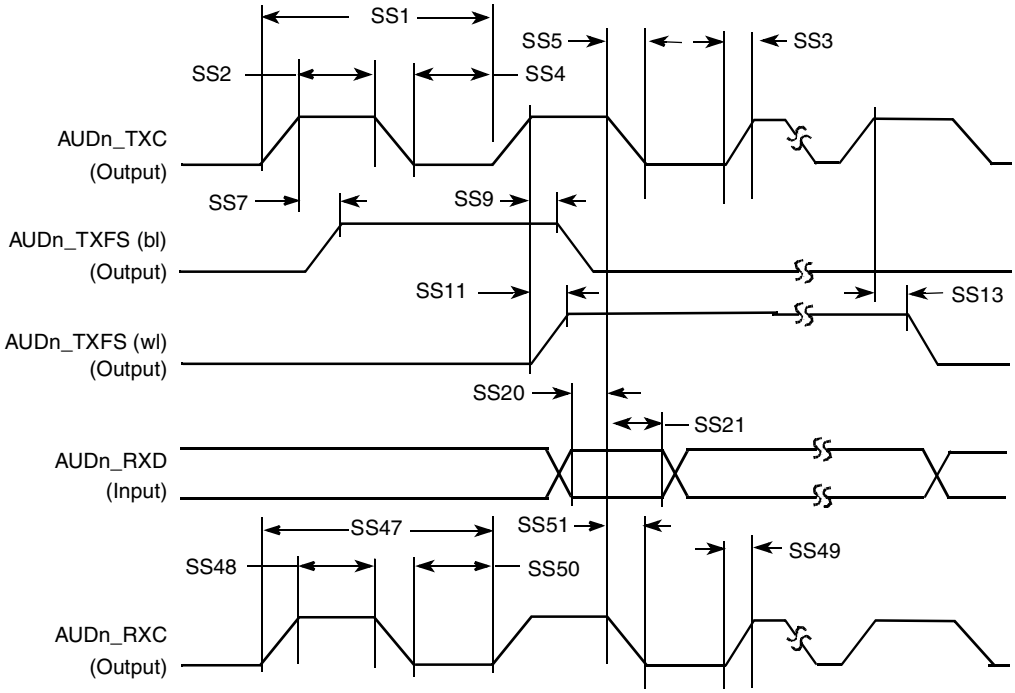

Figure 79. SSI Receiver Internal Clock Timing Diagram

Table 82. SSI Receiver Timing with Internal Clock

ID	Parameter	Min.	Max.	Unit
Internal Clock Operation				
SS1	(Tx/Rx) CK clock period	81.4	—	ns
SS2	(Tx/Rx) CK clock high period	36.0	—	ns
SS3	(Tx/Rx) CK clock rise time	—	6.0	ns
SS4	(Tx/Rx) CK clock low period	36.0	—	ns
SS5	(Tx/Rx) CK clock fall time	—	6.0	ns
SS7	(Rx) CK high to FS (bl) high	—	15.0	ns
SS9	(Rx) CK high to FS (bl) low	—	15.0	ns
SS11	(Rx) CK high to FS (wl) high	—	15.0	ns
SS13	(Rx) CK high to FS (wl) low	—	15.0	ns
SS20	SRXD setup time before (Rx) CK low	10.0	—	ns
SS21	SRXD hold time after (Rx) CK low	0.0	—	ns
Oversampling Clock Operation				
SS47	Oversampling clock period	15.04	—	ns

Table 82. SSI Receiver Timing with Internal Clock (continued)

ID	Parameter	Min.	Max.	Unit
SS48	Oversampling clock high period	6.0	—	ns
SS49	Oversampling clock rise time	—	3.0	ns
SS50	Oversampling clock low period	6.0	—	ns
SS51	Oversampling clock fall time	—	3.0	ns

Note:

- All the timings for the SSI are given for a non-inverted serial clock polarity (TSCKP/RSCKP = 0) and a non-inverted frame sync (TFSI/RFSI = 0). If the polarity of the clock and/or the frame sync have been inverted, all the timing remains valid by inverting the clock signal STCK/SRCK and/or the frame sync STFS/SRFS shown in the tables and in the figures.
- All timings are on pads when SSI is being used for a data transfer.
- ”Tx” and “Rx” refer to the transmit and receive sections of the SSI.
- For internal frame sync operation using external clock, the FS timing is the same as that of Tx Data (for example, during AC97 mode of operation).

3.7.17.3 SSI Transmitter Timing with External Clock

Figure 80 shows the timing for the SSI transmitter with external clock. Table 83 describes the timing parameters (SS22-SS46) shown in the figure.

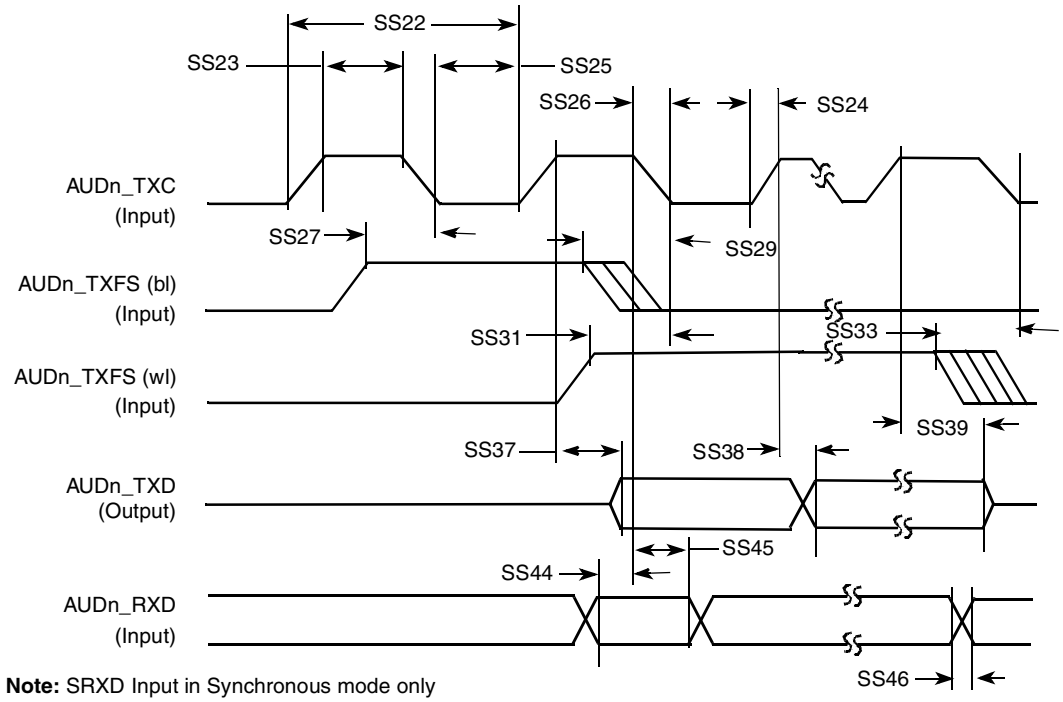

Figure 80. SSI Transmitter with External Clock Timing Diagram

Table 83. SSI Transmitter Timing with External Clock

ID	Parameter	Min.	Max.	Unit
External Clock Operation				
SS22	(Tx/Rx) CK clock period	81.4	—	ns
SS23	(Tx/Rx) CK clock high period	36.0	—	ns
SS24	(Tx/Rx) CK clock rise time	—	6.0	ns
SS25	(Tx/Rx) CK clock low period	36.0	—	ns
SS26	(Tx/Rx) CK clock fall time	—	6.0	ns
SS27	FS (bl) low/ high setup before (Tx) CK falling	–10.0	15.0	ns
SS29	FS (bl) low/ high setup before (Tx) CK falling	10.0	—	ns
SS31	FS (wl) low/ high setup before (Tx) CK falling	–10.0	15.0	ns
SS33	FS (wl) low/ high setup before (Tx) CK falling	10.0	—	ns
SS37	(Tx) CK high to STXD valid from high impedance	—	15.0	ns
SS38	(Tx) CK high to STXD high/low	—	15.0	ns
SS39	(Tx) CK high to STXD high impedance	—	15.0	ns
Synchronous External Clock Operation				
SS44	SRXD setup before (Tx) CK falling	10.0	—	ns
SS45	SRXD hold after (Tx) CK falling	2.0	—	ns
SS46	SRXD rise/fall time	—	6.0	ns

Note:

- All the timings for the SSI are given for a non-inverted serial clock polarity (TSCKP/RSCKP = 0) and a non-inverted frame sync (TFSI/RFSI = 0). If the polarity of the clock and/or the frame sync have been inverted, all the timing remains valid by inverting the clock signal STCK/SRCK and/or the frame sync STFS/SRFS shown in the tables figures.
- All timings are on pads when SSI is being used for data transfer.
- ”Tx” and “Rx” refer, respectively, to the transmit and receive sections of the SSI.
- For internal frame sync operation using external clock, the FS timing is the same as that of Tx data (for example, during AC97 mode of operation).

3.7.17.4 SSI Receiver Timing with External Clock

Figure 81 shows the timing for SSI receiver with external clock. Table 84 describes the timing parameters (SS22–SS41) used in the figure.

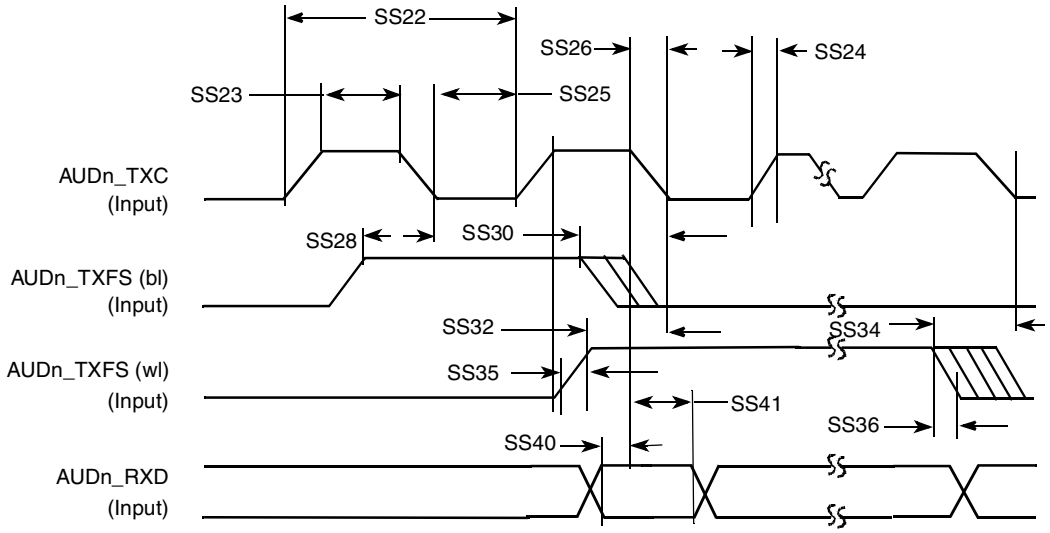

Figure 81. SSI Receiver with External Clock Timing Diagram

Table 84. SSI Receiver Timing with External Clock

ID	Parameter	Min.	Max.	Unit
External Clock Operation				
SS22	(Tx/Rx) CK clock period	81.4	—	ns
SS23	(Tx/Rx) CK clock high period	36.0	—	ns
SS24	(Tx/Rx) CK clock rise time	—	6.0	ns
SS25	(Tx/Rx) CK clock low period	36.0	—	ns
SS26	(Tx/Rx) CK clock fall time	—	6.0	ns
SS28	FS (bl) low/high setup before (Tx) CK falling	–10.0	15.0	ns
SS30	FS (bl) low/high setup before (Tx) CK falling	10.0	—	ns
SS32	FS (wl) low/high setup before (Tx) CK falling	–10.0	15.0	ns
SS34	FS (wl) low/high setup before (Tx) CK falling	10.0	—	ns
SS35	(Tx/Rx) External FS rise time	—	6.0	ns
SS36	(Tx/Rx) External FS fall time	—	6.0	ns
SS40	SRXD setup time before (Rx) CK low	10.0	—	ns
SS41	SRXD hold time after (Rx) CK low	2.0	—	ns

Note:

- All the timings for the SSI are given for a non-inverted serial clock polarity (TSCKP/RSCKP = 0) and a non-inverted frame sync (TFSI/RFSI = 0). If the polarity of the clock and/or the frame sync have been inverted, all the timing remains valid by inverting the clock signal STCK/SRCK and/or the frame sync STFS/SRFS shown in the tables and in the figures.
- All timings are on pads when SSI is being used for data transfer.

- ”Tx” and “Rx” refer, respectively, to the transmit and receive sections of the SSI.
- For internal frame sync operation using external clock, the FS timing is the same as that of Tx data (for example, during AC97 mode of operation).

3.7.18 Touchscreen ADC Electrical Specifications and Timing

This section describes the electrical specifications, operation modes, and timing of the touchscreen ADC.

3.7.18.1 ADC Electrical Specifications

Table 85 shows the electrical specifications for the touchscreen ADC.

Table 85. Touchscreen ADC Electrical Specifications

Parameter	Conditions	Min.	Typ.	Max.	Unit
ADC					
Input sampling capacitance (C_S)	No pin/pad capacitance included	—	2	—	pF
Resolution	—		12		bits
Analog Bias					
Resistance value between *ref* and *agndref*	—	—	1.6	—	kΩ
Timing Characteristics					
Sampling rate (fs)	—	—	—	125	kHz
Internal ADC/TSC clock frequency	—	—	—	1.75	MHz
Multiplexed inputs	—		8		—
Data latency	—		12.5		clk cycles
Power-up time[1]	—		14		clk cycles
clk falling edge to sampling delay (tsd)	—	2	5	8	ns
soc input setup time before clk rising edge (tsocst)	—	0.5	1	3	ns
soc input hold time after clk rising edge (tsochld)	—	2	3	6	ns
eoc delay after clk rise edge (teoc)	With a 250 pF load	2	7	10	ns
Valid data out delay after eoc rise edge (tdata)	With a 250 pF load	5	8	13	ns
Power Supply Requirements					
Current consumption[2] NVCC_ADC QV_{DD}	—	—	—	2.1 0.5	mA mA

Table 85. Touchscreen ADC Electrical Specifications (continued)

Parameter	Conditions	Min.	Typ.	Max.	Unit
Power-down current NVCC_ADC QV_{DD}	—	—	—	1 10	uA uA
Touchscreen Interface					
Expected plate resistance	—	100	—	1500	Ω
Switch drivers on resistance	GND and VDD switches	—	—	10	Ω
Conversion Characteristics[3]					
DNL[4]	fin = 1 kHz	—	+/–0.75	—	LSB
INL[4]	fin = 1 kHz	—	+/–2.0	—	LSB
Gain + Offset Error	—	—	—	+/–2	%FS

1 This comprises only the required initial dummy conversion cycle. Additional power-up time depends on the *enadc*, *reset* and *soc* signals applied to the touchscreen controller.

2 This value only includes the ADC and the driver switches, but it does not take into account the current consumption in the touchscreen plate. For example, if the plate resistance is 100 W, the total current consumption is about 33 mA.

3 At avdd = 3.3 V, dvdd = 1.2 V, Tjunction = 50 °C, fclk = 1.75 MHz, any process corner, unless otherwise noted.

4 Value measured with a –0.5 dBFS sinusoidal input signal and computed with the code density test.

3.7.18.2 ADC Timing Diagrams

Figure 82 represents the synchronization between the signals *clk*, *soc*, *eoc*, and the output bits in the usage of the internal ADC. After a conversion cycle *eoc* is asserted, a new conversion begins only when the

assertion of *soc* is detected. Thus, if the *soc* signal is continuously asserted, the ADC undergoes successive conversion cycles and achieves the maximum sampling rate. If *soc* is negated, no conversion is initiated.

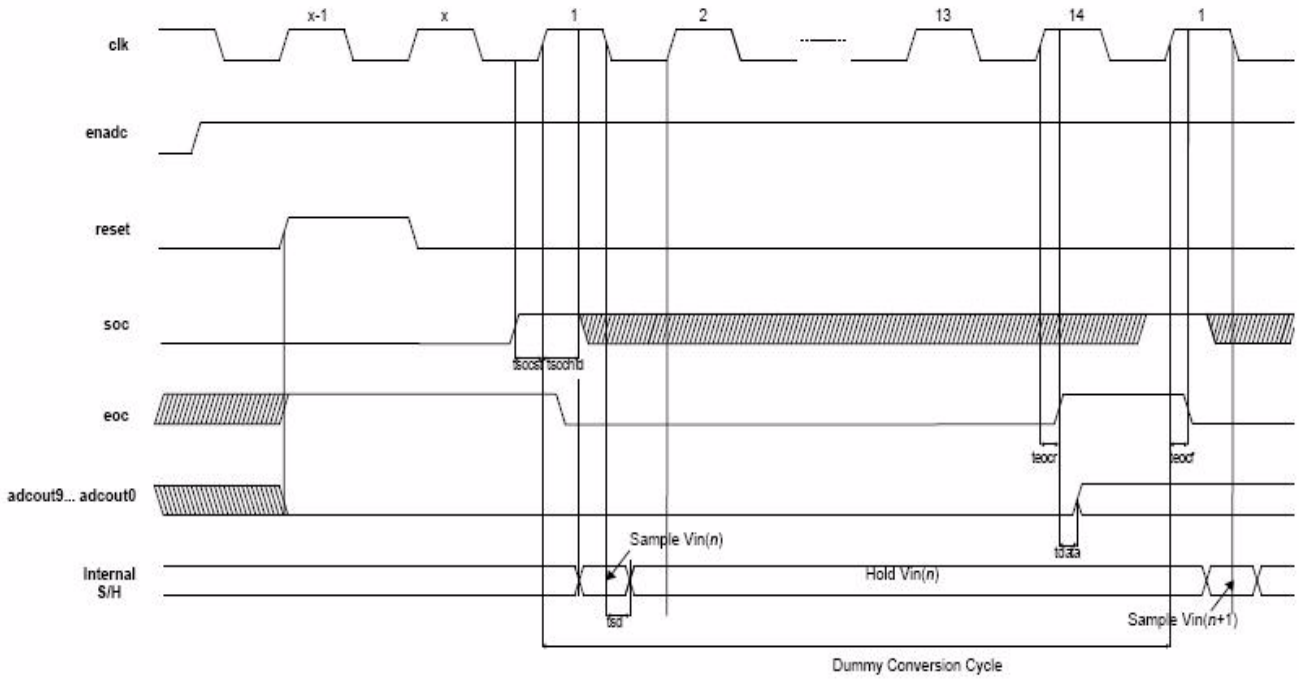

Figure 82. Start-up Sequence

The output data can be read from *adcout11...adcout0*, and is available *tdata* nanoseconds after the rising edge of *eoc*. The *reset* signal and the digital signals controlling the analog switches (*ypsw, xpsw, ynsw, xnsw*) are totally asynchronous.

The following conditions are necessary to guarantee the correct operation of the ADC:

- The input multiplexer selection (*selin11…selin0*) is stable during both the last clock cycle (14th) and the first clock cycle (1st). The best way to guarantee this is to make the input multiplexer selection during clock cycles 2 to 13.
- The references are stable during clock cycle 1 to 13. The best way to guarantee this is to make the reference multiplexer selection (*selrefp* and *selrefn*) before issuing an *soc* pulse and changing it only after an *eoc* pulse has been acquired, during the last clock cycle (14).

Figure 83 shows the timing for ADC normal operation.

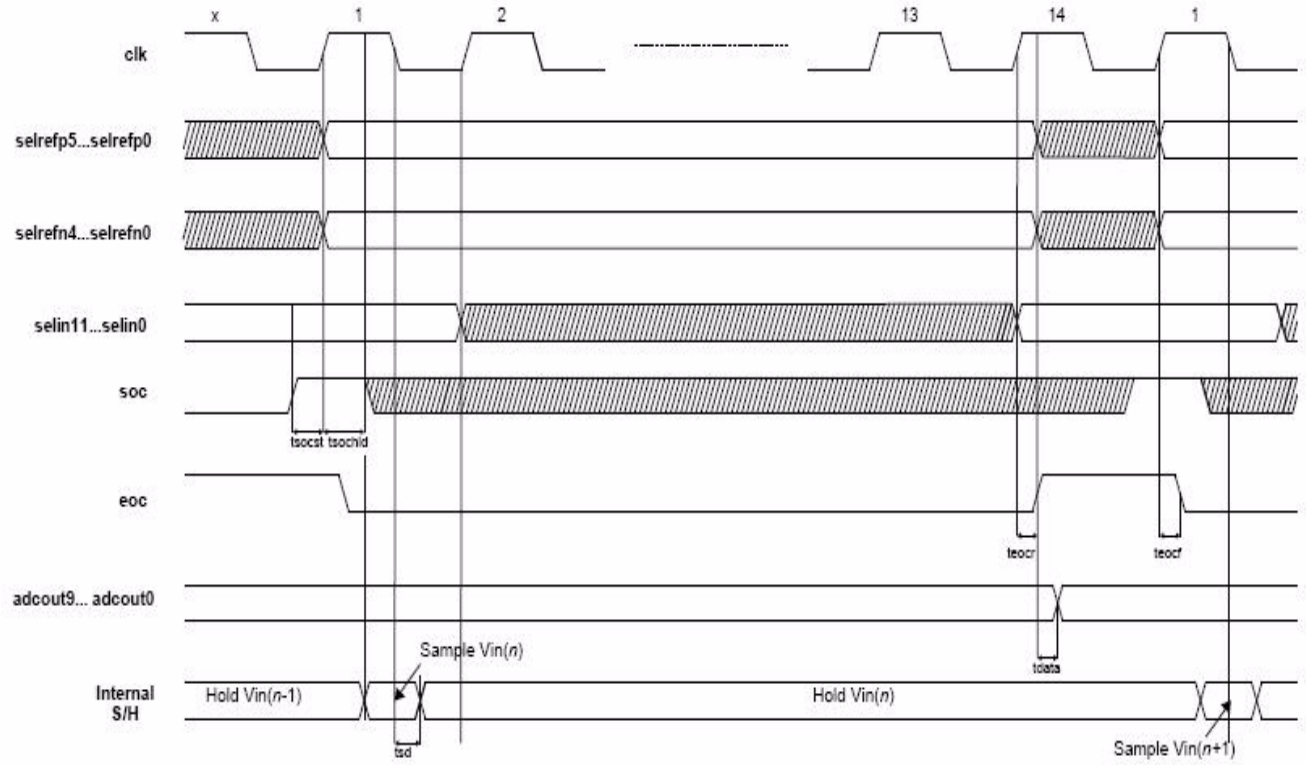

Figure 83. Timing for ADC Normal Operation

When the ADC is used so that the idle clock cycles occur between conversions (due to the negation of *soc*), the *selin* inputs must be stable at least 1 clock cycle before the clock's rising edge where the *soc* signal is latched. Also, *selrefp* and *selrefn* must be stable by the time the *soc* signal is latched. These conditions are met if *enadc=1* and *reset=0* throughout ADC operation, including the idle cycles. If the conditions are not met, or if power is lost during ADC operation, then a new start-up sequence is required for ADC to become operational again.

Figure 84 represents the usage of the ADC with idle cycles between conversions. This diagram is valid for any value of *N* equal or greater than 1.

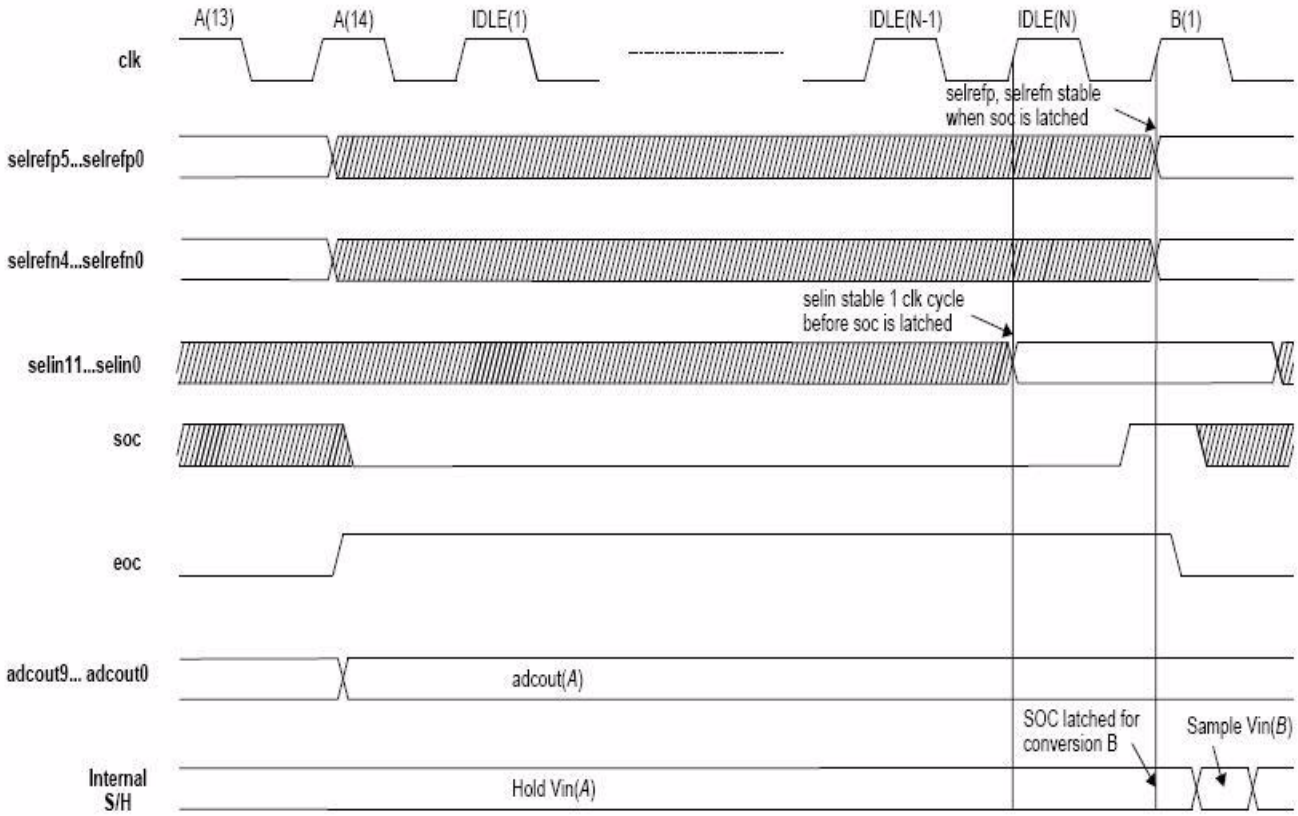

Figure 84. ADC Usage with Idle Cycles Between Conversions

3.7.19 UART Timing

This section describes the timing of the UART module in serial and parallel mode.

3.7.19.1 UART RS-232 Serial Mode Timing

3.7.19.1.1 UART Transmit Timing in RS-232 Serial Mode

Figure 85 shows the UART transmit timing in RS-232 serial mode, showing only 8 data bits and 1 stop bit. Table 86 describes the timing parameter (UA1) shown in the figure.

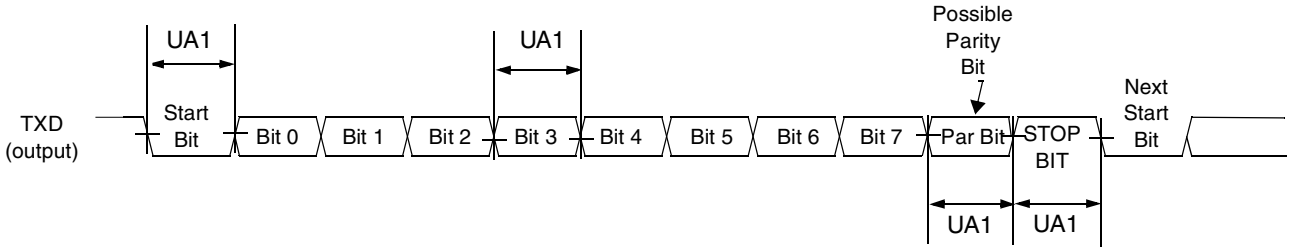

Figure 85. UART RS-232 Serial Mode Transmit Timing Diagram

Table 86. UART RS-232 Serial Mode Transmit Timing Parameters

ID	Parameter	Symbol	Min.	Max.	Units
UA1	Transmit Bit Time	t_{Tbit}	$1/F_{baud_rate}$[1] $- T_{ref_clk}$[2]	$1/F_{baud_rate} + T_{ref_clk}$	—

[1] F_{baud_rate}: Baud rate frequency. The maximum baud rate the UART can support is (*ipg_perclk* frequency)/16.
[2] T_{ref_clk}: The period of UART reference clock *ref_clk* (*ipg_perclk* after RFDIV divider).

3.7.19.1.2 UART Receive Timing in RS-232 Serial Mode

Figure 86 shows the UART receive timing in RS-232 serial mode, showing only 8 data bits and 1 stop bit. Table 87 describes the timing parameter (UA2) shown in the figure.

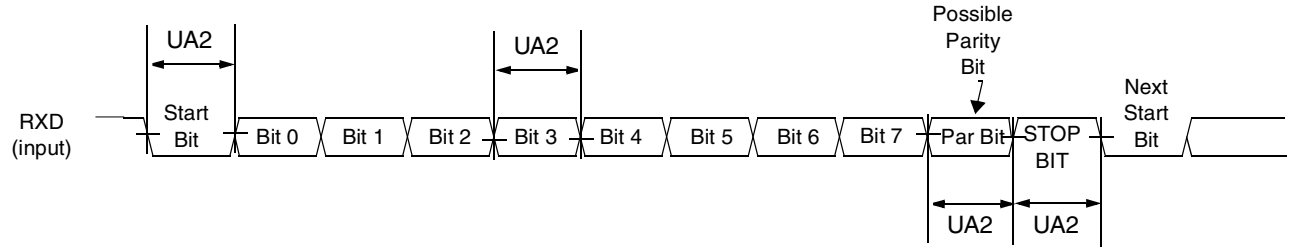

Figure 86. UART RS-232 Serial Mode Receive Timing Diagram

Table 87. UART RS-232 Serial Mode Receive Timing Parameters

ID	Parameter	Symbol	Min.	Max.	Units
UA2	Receive bit time[1]	t_{Rbit}	$1/F_{baud_rate}$[2] $- 1/(16 \times F_{baud_rate})$	$1/F_{baud_rate} + 1/(16 \times F_{baud_rate})$	—

[1] The UART receiver can tolerate $1/(16 \times F_{baud_rate})$ tolerance in each bit. But accumulation tolerance in one frame must not exceed $3/(16 \times F_{baud_rate})$.
[2] F_{baud_rate}: Baud rate frequency. The maximum baud rate the UART can support is (*ipg_perclk* frequency)/16.

3.7.19.2 UART Infrared (IrDA) Mode Timing

The following subsections describe the UART transmit and receive timing in IrDA mode.

3.7.19.2.3 UART IrDA Mode Transmit Timing

Figure 87 depicts the UART transmit timing in IrDA mode, showing only 8 data bits and 1 stop bit. Table 88 describes the timing parameters (UA3–UA4) shown in the figure.

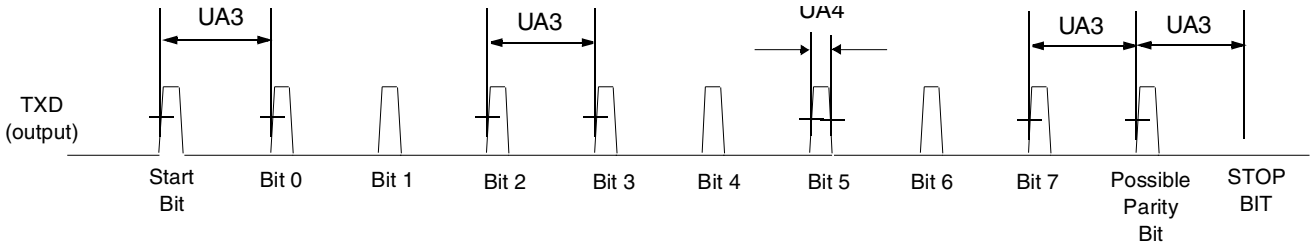

Figure 87. UART IrDA Mode Transmit Timing Diagram

Table 88. UART IrDA Mode Transmit Timing Parameters

ID	Parameter	Symbol	Min.	Max.	Units
UA3	Transmit bit time in IrDA mode	t_{TIRbit}	$1/F_{baud_rate}$[1] $- T_{ref_clk}$[2]	$1/F_{baud_rate} + T_{ref_clk}$	—
UA4	Transmit IR pulse duration	$t_{TIRpulse}$	$(3/16) \times (1/F_{baud_rate}) - T_{ref_clk}$	$(3/16) \times (1/F_{baud_rate}) + T_{ref_clk}$	—

[1] F_{baud_rate}: Baud rate frequency. The maximum baud rate the UART can support is (*ipg_perclk* frequency)/16.
[2] T_{ref_clk}: The period of UART reference clock *ref_clk* (*ipg_perclk* after RFDIV divider).

3.7.19.2.4 UART IrDA Mode Receive Timing

Figure 88 shows the UART receive timing for IrDA mode, for a format of 8 data bits and 1 stop bit. Table 89 describes the timing parameters (UA5–UA6) shown in the figure.

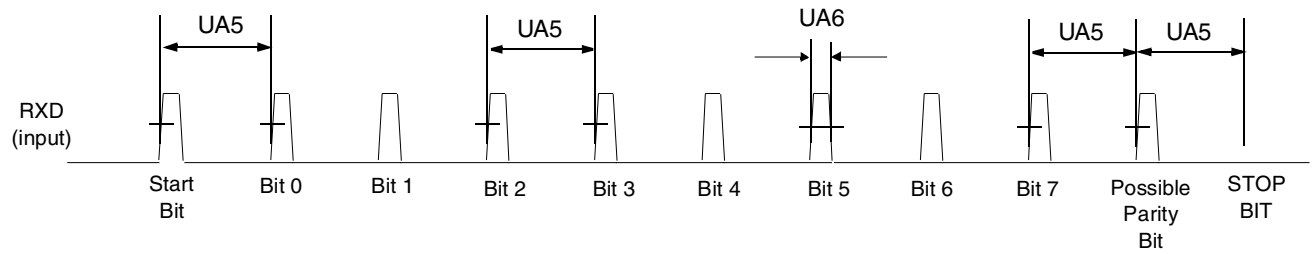

Figure 88. UART IrDA Mode Receive Timing Diagram

Table 89. UART IrDA Mode Receive Timing Parameters

ID	Parameter	Symbol	Min.	Max.	Units
UA5	Receive bit time[1] in IrDA mode	t_{RIRbit}	$1/F_{baud_rate}$[2] $- 1/(16 \times F_{baud_rate})$	$1/F_{baud_rate} + 1/(16 \times F_{baud_rate})$	—
UA6	Receive IR pulse duration	$t_{RIRpulse}$	1.41 µs	$(5/16) \times (1/F_{baud_rate})$	—

[1] The UART receiver can tolerate $1/(16 \times F_{baud_rate})$ tolerance in each bit. But accumulation tolerance in one frame must not exceed $3/(16 \times F_{baud_rate})$.

[2] F_{baud_rate}: Baud rate frequency. The maximum baud rate the UART can support is (*ipg_perclk* frequency)/16.

3.7.20 USBOTG Timing

This section describes timing for the USB OTG port and host ports. Both serial and parallel interfaces are described.

3.7.20.1 USB Serial Interface Timing

The USB serial transceiver is configurable to four modes supporting four different serial interfaces:

- DAT_SE0 bidirectional, 3-wire mode
- DAT_SE0 unidirectional, 6-wire mode
- VP_VM bidirectional, 4-wire mode
- VP_VM unidirectional, 6-wire mode

The following subsections describe the timings for these four modes.

3.7.20.1.1 DAT_SE0 Bidirectional Mode Timing

Table 90 defines the DAT_SE0 bidirectional mode signals.

Table 90. Signal Definitions—DAT_SE0 Bidirectional Mode

Name	Direction	Signal Description
USB_TXOE_B	Out	Transmit enable, active low
USB_DAT_VP	Out In	Tx data when USB_TXOE_B is low Differential Rx data when USB_TXOE_B is high
USB_SE0_VM	Out In	SE0 drive when USB_TXOE_B is low SE0 Rx indicator when USB_TXOE_B is high

Figure 89 shows the USB transmit waveform in DAT_SE0 bidirectional mode diagram.

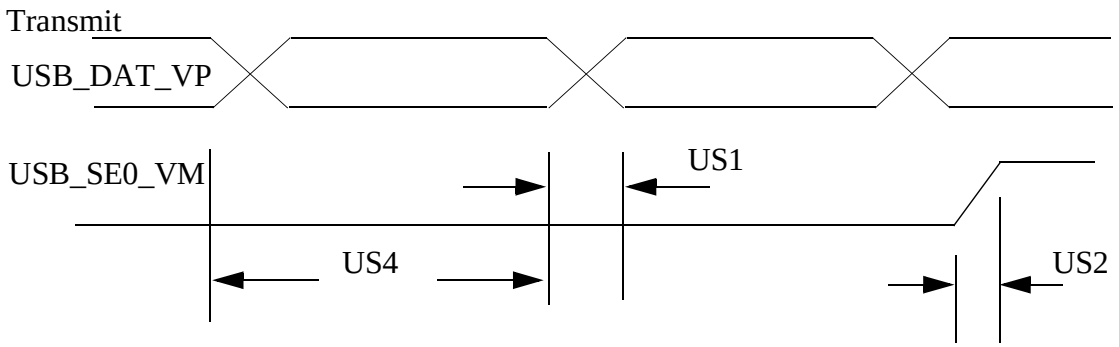

Figure 89. USB Transmit Waveform in DAT_SE0 Bidirectional Mode

Figure 90 shows the USB receive waveform in DAT_SE0 bidirectional mode diagram.

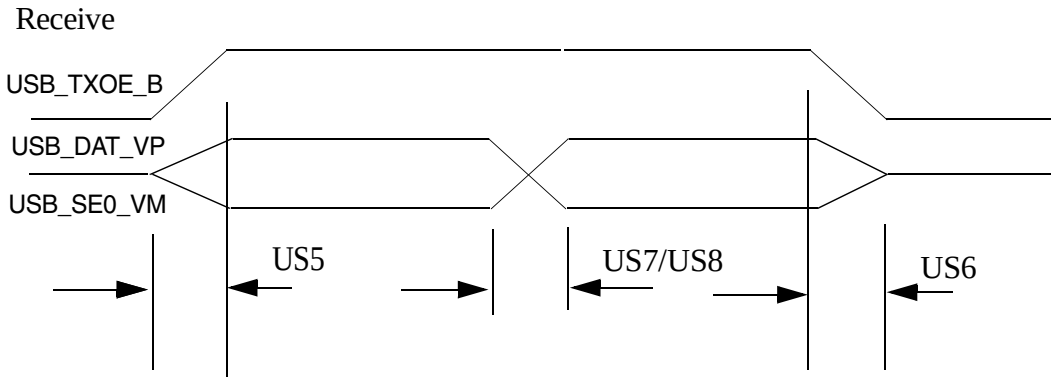

Figure 90. USB Receive Waveform in DAT_SE0 Bidirectional Mode

Table 91 shows the OTG port timing specification in DAT_SE0 bidirectional mode.

Table 91. OTG Port Timing Specification in DAT_SE0 Bidirectional Mode

No.	Parameter	Signal Name	Direction	Min.	Max.	Unit	Conditions/ Reference Signal
US1	Tx rise/fall time	USB_DAT_VP	Out	—	5.0	ns	50 pF
US2	Tx rise/fall time	USB_SE0_VM	Out	—	5.0	ns	50 pF
US3	Tx rise/fall time	USB_TXOE_B	Out	—	5.0	ns	50 pF
US4	Tx duty cycle	USB_DAT_VP	Out	49.0	51.0	%	—
US5	Enable Delay	USB_DAT_VP USB_SE0_VM	In	—	8.0	ns	USB_TXOE_B
US6	Disable Delay	USB_DAT_VP USB_SE0_VM	In	—	10.0	ns	USB_TXOE_B
US7	Rx rise/fall time	USB_DAT_VP	In	—	3.0	ns	35 pF
US8	Rx rise/fall time	USB_SE0_VM	In	—	3.0	ns	35 pF

3.7.20.1.2 DAT_SE0 Unidirectional Mode Timing

Table 92 defines the DAT_SE0 unidirectional mode signals.

Table 92. Signal Definitions—DAT_SE0 Unidirectional Mode

Name	Direction	Signal Description
USB_TXOE_B	Out	Transmit enable, active low
USB_DAT_VP	Out	Tx data when USB_TXOE_B is low
USB_SE0_VM	Out	SE0 drive when USB_TXOE_B is low
USB_VP1	In	Buffered data on DP when USB_TXOE_B is high
USB_VM1	In	Buffered data on DM when USB_TXOE_B is high
USB_RCV	In	Differential Rx data when USB_TXOE_B is high

Figure 91 shows the USB transmit waveform in DAT_SE0 unidirectional mode diagram.

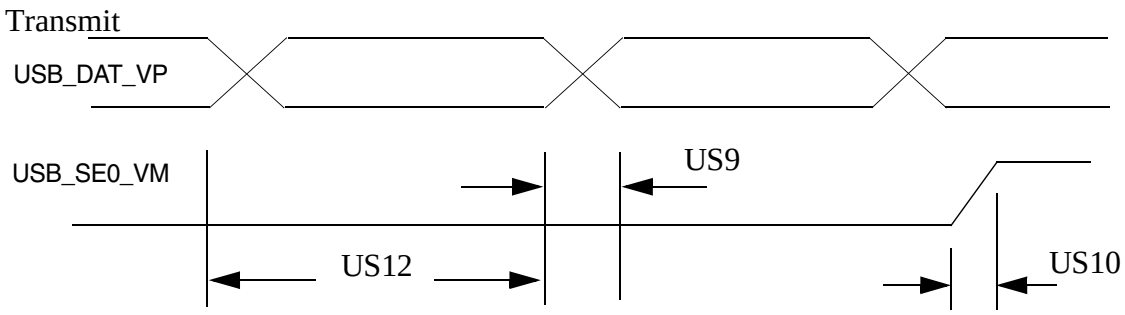

Figure 91. USB Transmit Waveform in DAT_SE0 Unidirectional Mode

Figure 92 shows the USB receive waveform in DAT_SE0 unidirectional mode diagram.

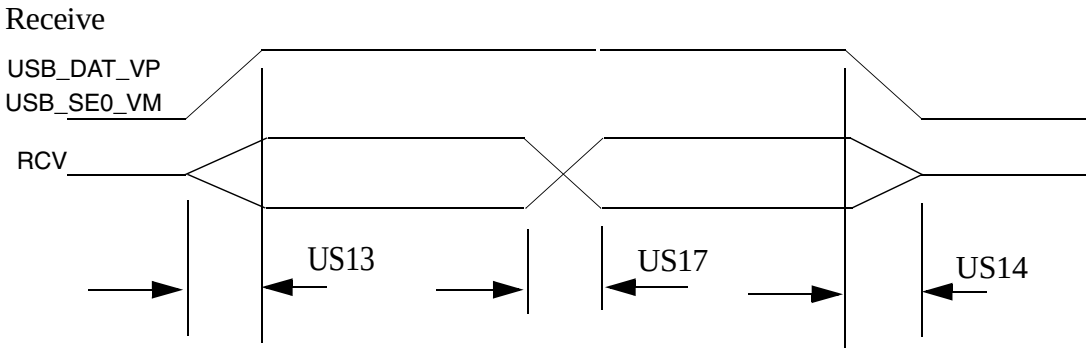

Figure 92. USB Receive Waveform in DAT_SE0 Unidirectional Mode

Table 93 shows the USB port timing specification in DAT_SE0 unidirectional mode.

Table 93. USB Port Timing Specification in DAT_SE0 Unidirectional Mode

No.	Parameter	Signal Name	Signal Source	Min.	Max.	Unit	Condition/ Reference Signal
US9	Tx rise/fall time	USB_DAT_VP	Out	—	5.0	ns	50 pF
US10	Tx rise/fall time	USB_SE0_VM	Out	—	5.0	ns	50 pF
US11	Tx rise/fall time	USB_TXOE_B	Out	—	5.0	ns	50 pF
US12	Tx duty cycle	USB_DAT_VP	Out	49.0	51.0	%	—
US13	Enable Delay	USB_DAT_VP USB_SE0_VM	In	—	8.0	ns	USB_TXOE_B
US14	Disable Delay	USB_DAT_VP USB_SE0_VM	In	—	10.0	ns	USB_TXOE_B
US15	Rx rise/fall time	USB_VP1	In	—	3.0	ns	35 pF
US16	Rx rise/fall time	USB_VM1	In	—	3.0	ns	35 pF
US17	Rx rise/fall time	USB_RCV	In	—	3.0	ns	35 pF

3.7.20.1.3 VP_VM Bidirectional Mode Timing

Table 94 defines the VP_VM bidirectional mode signals.

Table 94. Signal Definitions—VP_VM Bidirectional Mode

Name	Direction	Signal Description
USB_TXOE_B	Out	• Transmit enable, active low
USB_DAT_VP	Out (Tx) In (Rx)	• Tx VP data when USB_TXOE_B is low • Rx VP data when USB_TXOE_B is high
USB_SE0_VM	Out (Tx) In (Rx)	• Tx VM data when USB_TXOE_B low • Rx VM data when USB_TXOE_B high
USB_RCV	In	• Differential Rx data

Figure 93 shows the USB transmit waveform in VP_VM bidirectional mode diagram.

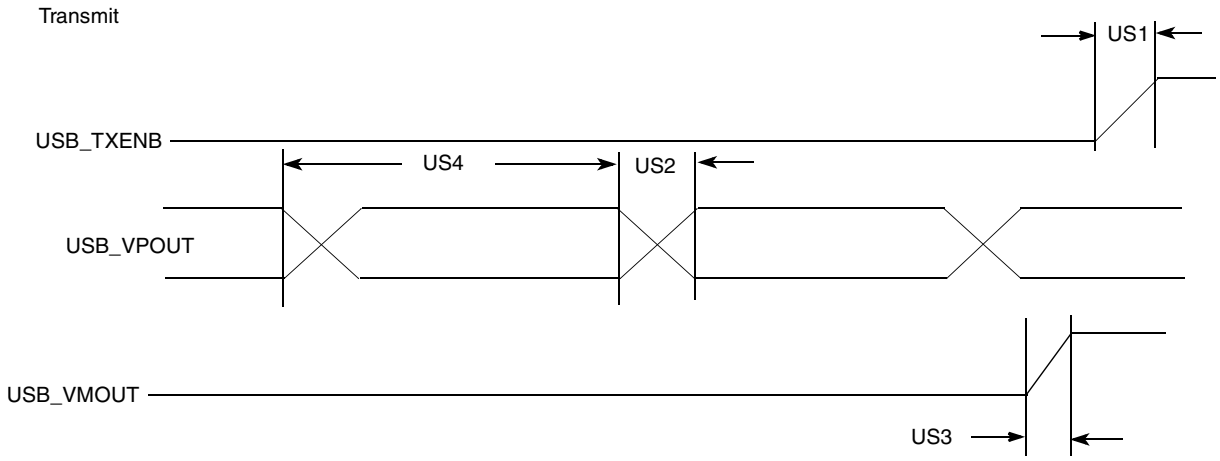

Figure 93. USB Transmit Waveform in VP_VM Bidirectional Mode

Figure 94 shows the USB receive waveform in VP_VM bidirectional mode diagram.

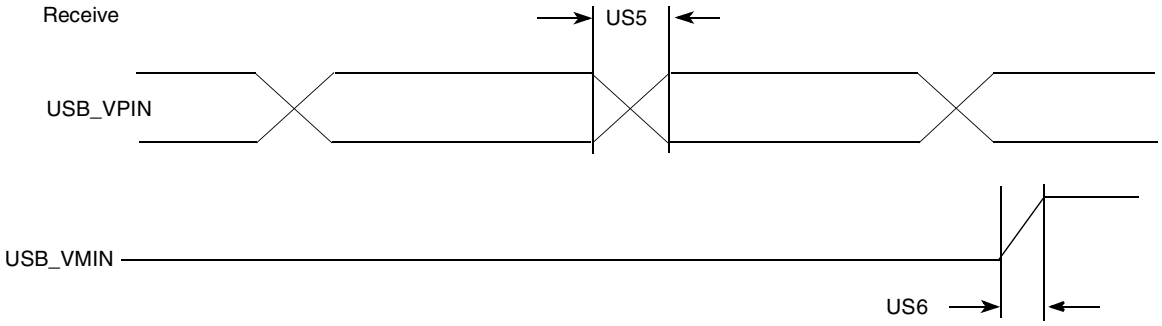

Figure 94. USB Receive Waveform in VP_VM Bidirectional Mode

Table 95 shows the USB port timing specification in VP_VM bidirectional mode.

Table 95. USB Port Timing Specifications in VP_VM Bidirectional Mode

No.	Parameter	Signal Name	Direction	Min.	Max.	Unit	Condition/ Reference Signal
US18	Tx rise/fall time	USB_DAT_VP	Out	—	5.0	ns	50 pF
US19	Tx rise/fall time	USB_SE0_VM	Out	—	5.0	ns	50 pF
US20	Tx rise/fall time	USB_TXOE_B	Out	—	5.0	ns	50 pF
US21	Tx duty cycle	USB_DAT_VP	Out	49.0	51.0	%	—
US22	Tx high overlap	USB_SE0_VM	Out	0.0	—	ns	USB_DAT_VP
US23	Tx low overlap	USB_SE0_VM	Out	—	0.0	ns	USB_DAT_VP
US24	Enable delay	USB_DAT_VP USB_SE0_VM	In	—	8.0	ns	USB_TXOE_B
US25	Disable delay	USB_DAT_VP USB_SE0_VM	In	—	10.0	ns	USB_TXOE_B
US26	Rx rise/fall time	USB_DAT_VP	In	—	3.0	ns	35 pF
US27	Rx rise/fall time	USB_SE0_VM	In	—	3.0	ns	35 pF
US28	Rx skew	USB_DAT_VP	Out	–4.0	+4.0	ns	USB_SE0_VM
US29	Rx skew	USB_RCV	Out	–6.0	+2.0	ns	USB_DAT_VP

3.7.20.1.4 VP_VM Unidirectional Mode Timing

Table 96 defines the signals for USB in VP_VM unidirectional mode.

Table 96. Signal Definitions for USB VP_VM Unidirectional Mode

Name	Direction	Signal Description
USB_TXOE_B	Out	Transmit enable, active low
USB_DAT_VP	Out	Tx VP data when USB_TXOE_B is low
USB_SE0_VM	Out	Tx VM data when USB_TXOE_B is low
USB_VP1	In	Rx VP data when USB_TXOE_B is high
USB_VM1	In	Rx VM data when USB_TXOE_B is high
USB_RCV	In	Differential Rx data

Figure 95 shows the USB transmit waveform in VP_VM unidirectional mode diagram.

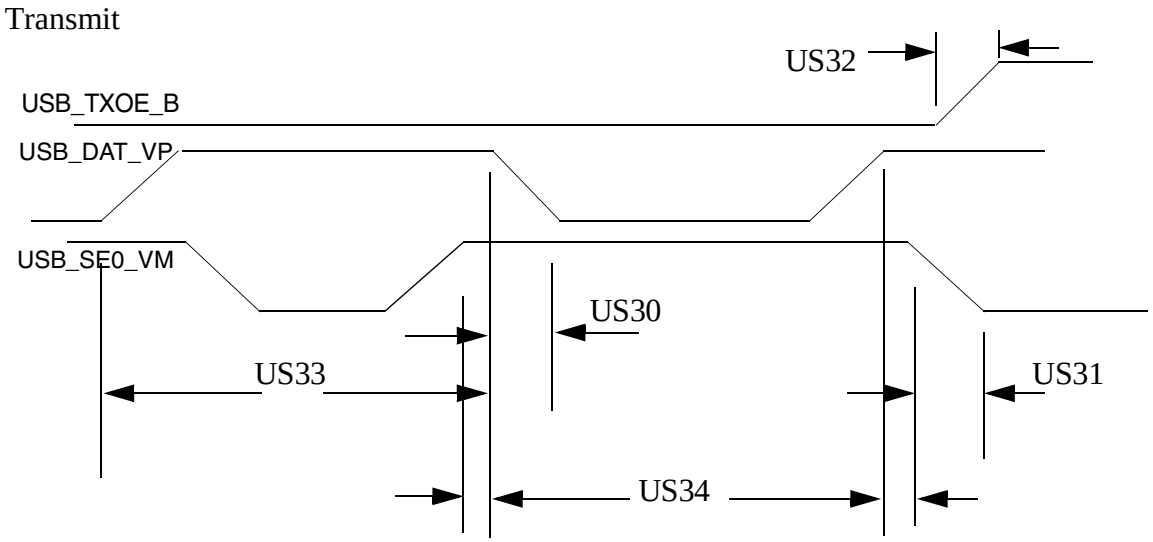

Figure 95. USB Transmit Waveform in VP_VM Unidirectional Mode

Figure 96 shows the USB receive waveform in VP_VM unidirectional mode diagram.

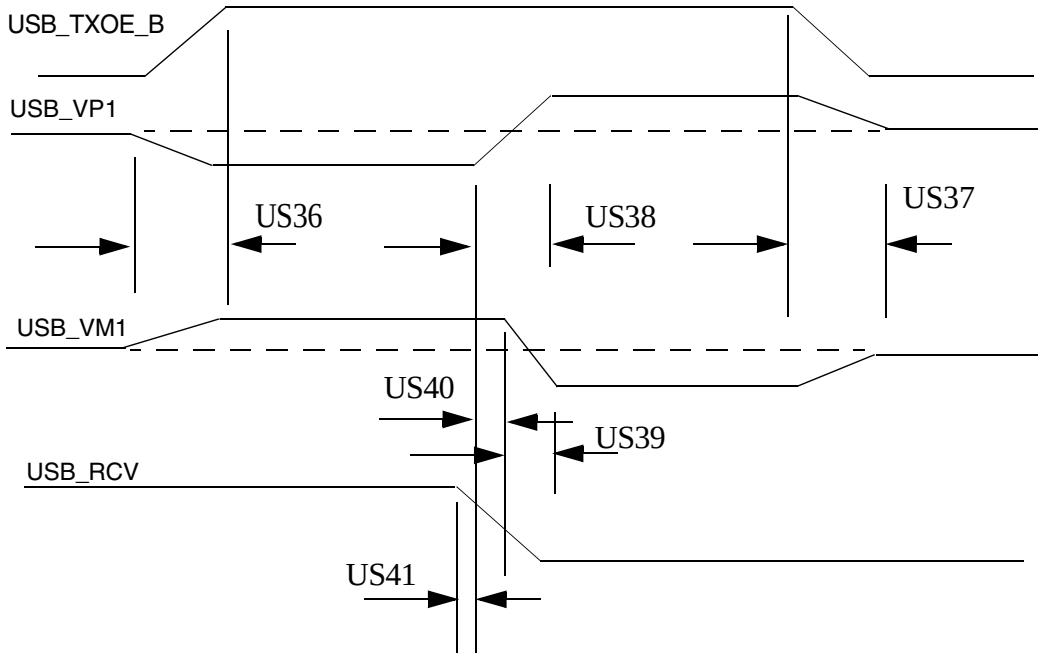

Figure 96. USB Receive Waveform in VP_VM Unidirectional Mode

Table 97 shows the timing specifications for USB in VP_VM unidirectional mode.

Table 97. USB Timing Specifications in VP_VM Unidirectional Mode

No.	Parameter	Signal	Direction	Min.	Max.	Unit	Conditions/ Reference Signal
US30	Tx rise/fall time	USB_DAT_VP	Out	—	5.0	ns	50 pF
US31	Tx rise/fall time	USB_SE0_VM	Out	—	5.0	ns	50 pF
US32	Tx rise/fall time	USB_TXOE_B	Out	—	5.0	ns	50 pF
US33	Tx duty cycle	USB_DAT_VP	Out	49.0	51.0	%	—
US34	Tx high overlap	USB_SE0_VM	Out	0.0	—	ns	USB_DAT_VP
US35	Tx low overlap	USB_SE0_VM	Out	—	0.0	ns	USB_DAT_VP
US36	Enable delay	USB_DAT_VP USB_SE0_VM	In	—	8.0	ns	USB_TXOE_B
US37	Disable delay	USB_DAT_VP USB_SE0_VM	In	—	10.0	ns	USB_TXOE_B
US38	Rx rise/fall time	USB_VP1	In	—	3.0	ns	35 pF
US39	Rx rise/fall time	USB_VM1	In	—	3.0	ns	35 pF
US40	Rx skew	USB_VP1	Out	–4.0	+4.0	ns	USB_SE0_VM
US41	Rx skew	USB_RCV	Out	–6.0	+2.0	ns	USB_DAT_VP

3.7.20.2 USB Parallel Interface Timing

Table 98 defines the USB parallel interface signals.

Table 98. Signal Definitions for USB Parallel Interface

Name	Direction	Signal Description
USB_Clk	In	Interface clock—All interface signals are synchronous to USB_Clk
USB_Data[7:0]	I/O	Bidirectional data bus, driven low by the link during idle—Bus ownership is determined by the direction
USB_Dir	In	Direction—Control the direction of the data bus
USB_Stp	Out	Stop—The link asserts this signal for one clock cycle to stop the data stream currently on the bus
USB_Nxt	In	Next—The PHY asserts this signal to throttle the data

Figure 97 shows the USB parallel mode transmit/receive waveform. Table 99 describes the timing parameters (USB15–USB17) shown in the figure.

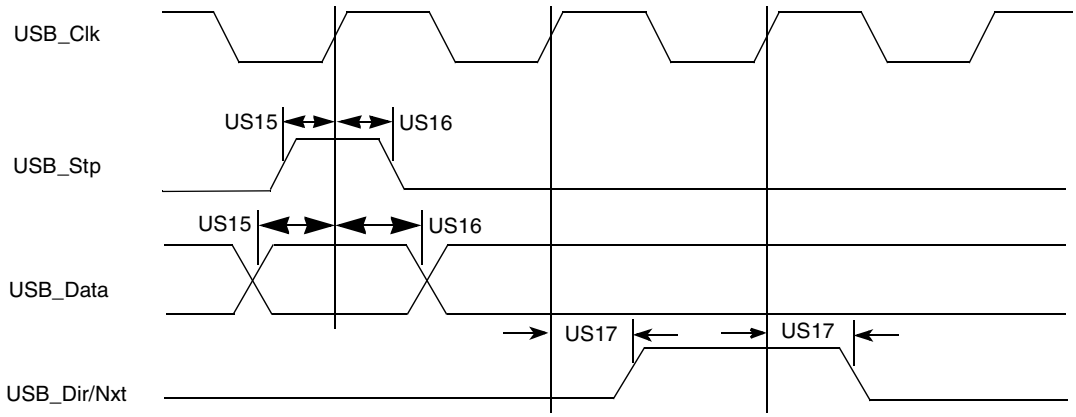

Figure 97. USB Parallel Mode Transmit/Receive Waveform

Table 99. USB Timing Specification in Parallel Mode

ID	Parameter	Min.	Max.	Unit	Conditions/Reference Signal
US15	Setup time (Dir&Nxt in, Data in)	6.0	—	ns	10 pF
US16	Hold time (Dir&Nxt in, Data in)	0.0	—	ns	10 pF
US17	Output delay time (Stp out, Data out	—	9.0	ns	10 pF

4 Package Information and Contact Assignment

4.1 400 MAPBGA—Case 17x17 mm, 0.8 mm Pitch

Figure 98 shows the 17×17 mm i.MX25 production package. The following notes apply to Figure 98:

- All dimensions in millimeters.
- Dimensioning and tolerancing per ASME Y14.5M-1994.
- Maximum solder bump diameter measured parallel to datum A.
- Datum A, the seating plane, is determined by the spherical crowns of the solder bumps.
- Parallelism measurement shall exclude any effect of mark on top surface of package.

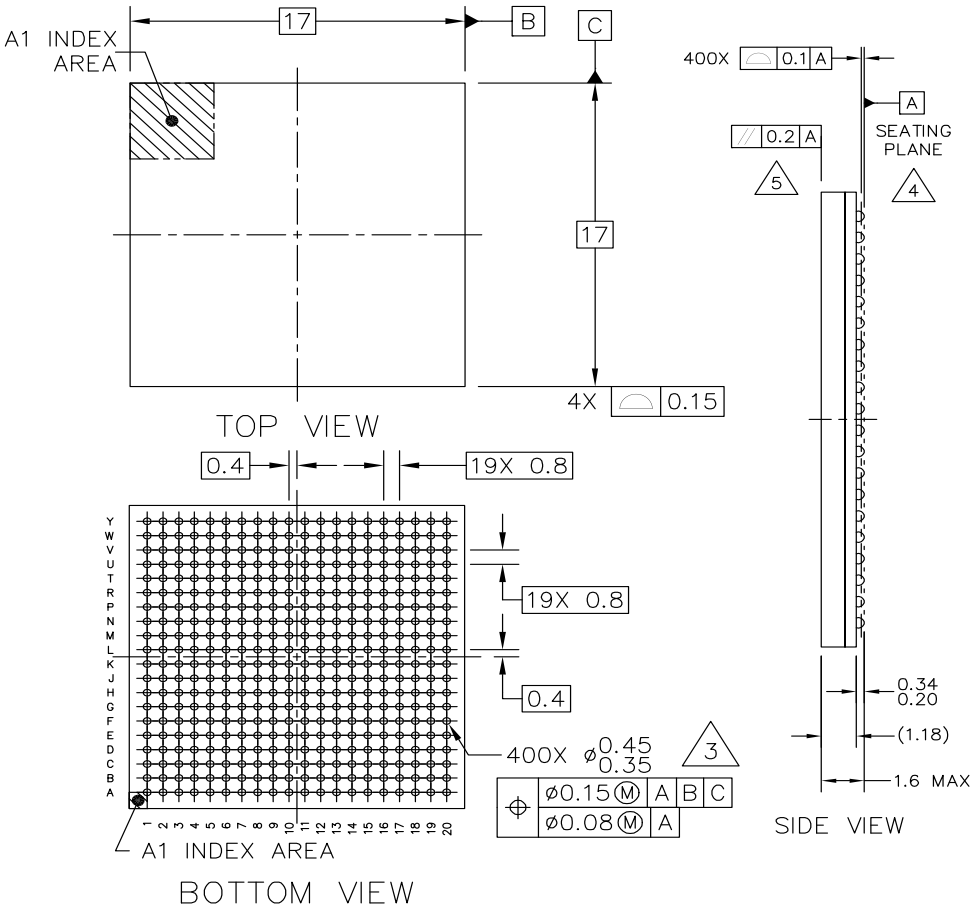

Figure 98. 17×17 i.MX25 Production Package

4.2 Ground, Power, Sense, and Reference Contact Assignments Case 17x17 mm, 0.8 mm Pitch

Table 100 shows the 17×17 mm package ground, power, sense, and reference contact assignments.

Table 100. 17×17 mm Package Ground, Power Sense, and Reference Contact Assignments

Contact Name	Contact Assignment
BATT_VDD	P10
FUSE_VDD	T17
MPLL_GND	U17
MPLL_VDD	U18
NGND_ADC	Y13
NVCC_ADC	W13
NVCC_CRM	N14
NVCC_CSI	J13, J14

Table 100. 17×17 mm Package Ground, Power Sense, and Reference Contact Assignments (continued)

Contact Name	Contact Assignment
NVCC_DRYICE[1]	W11
NVCC_EMI1	G6, G7, G8, G9, H6, H7, H8, J6, J7
NVCC_EMI2	G12, G13, G14, G15, H12, H13, H14
NVCC_JTAG	U10
NVCC_LCDC	P6, P7, R6, R7
NVCC_MISC	N5, N6, N7
NVCC_NFC	L6, L7, L8
NVCC_SDIO	R17
OSC24M_GND	W15
OSC24M_VDD	W16
QGND	A1, A11, A20, B11, C11, D11, E5, E6, E7, E8, E9, E10, E11, E12, E13, E14, E15, E16, F5, F6, F7, F8, F9, F10, F11, F12, F13, F14, F15, F16, G5, G10, G16, H5, H9, H10, H11, H15, H16, J5, J9, J10, J11, J15, J16, K1, K2, K3, K4, K5, K8, K9, K10, K11, K13, K14, K15, L5, L9, L10, L11, L12, L13, L14, L15, M8, M9, M10, M11, M12, M13, M14, M15, N9, N12, N13, N15, N16, P5, P13, P14, P15, P16, R5, R8, R9, R10, R11, R12, R13, R14, R15, R16, T5, T6, T7, T8, T9, T10, T11, T12, T13, T14, T15, T16, Y1, Y20
QVDD	G11, J8, J12, K6, K7, K12, M5, M6, M7, N8, P8, P9
REF	V11
UPLL_GND	M16
UPLL_VDD	L16
USBPHY1_UPLLVDD	M17
USBPHY1_UPLLVSS	N17
USBPHY1_VDDA	K16
USBPHY1_VDDA_BIAS	K19
USBPHY1_VSSA	L19
USBPHY1_VSSA_BIAS	J17
USBPHY2_VDD	W18
USBPHY2_VSS	W17

[1] NVCC_DRYICE is a supply output. An external capacitor no less than 4 µF must be connected to it. A 4.7 µF capacitor is recommended.

4.3 Signal Contact Assignments—17 x 17 mm, 0.8 mm Pitch

Table 101 lists the 17×17 mm package i.MX25 signal contact assignments.

Table 101. 17×17 mm Package i.MX25 Signal Contact Assignment

Contact Name	Contact Assignment	Power Rail	I/O Buffer Type	Direction after Reset[1]	Configuration after Reset[1]
A0	A18	EMI2	DDR	OUTPUT	Low
A1	B17	EMI2	DDR	OUTPUT	Low
A2	C17	EMI2	DDR	OUTPUT	Low
A3	B18	EMI2	DDR	OUTPUT	Low
A4	C20	EMI2	DDR	OUTPUT	Low
A5	A19	EMI2	DDR	OUTPUT	Low
A6	C19	EMI2	DDR	OUTPUT	Low
A7	B19	EMI2	DDR	OUTPUT	Low
A8	D18	EMI2	DDR	OUTPUT	Low
A9	C18	EMI2	DDR	OUTPUT	Low
A10	A2	EMI1	DDR	OUTPUT	Low
MA10	D16	EMI2	DDR	OUTPUT	Low
A11	D20	EMI2	DDR	OUTPUT	Low
A12	D17	EMI2	DDR	OUTPUT	Low
A13	D19	EMI2	DDR	OUTPUT	Low
A14	A3	EMI1	DDR	OUTPUT	Low
A15	B4	EMI1	DDR	OUTPUT	Low
A16	C6	EMI1	DDR	OUTPUT	Low
A17	B5	EMI1	DDR	OUTPUT	Low
A18	D7	EMI1	DDR	OUTPUT	Low
A19	A4	EMI1	DDR	OUTPUT	Low
A20	B6	EMI1	DDR	OUTPUT	Low
A21	C7	EMI1	DDR	OUTPUT	Low
A22	A5	EMI1	DDR	OUTPUT	Low
A23	A6	EMI1	DDR	OUTPUT	Low
A24	B7	EMI1	DDR	OUTPUT	Low
A25	A7	EMI1	DDR	OUTPUT	Low
SD0	A12	EMI1	DDR	INPUT	Keeper
SD1	C13	EMI1	DDR	INPUT	Keeper
SD2	B13	EMI1	DDR	INPUT	Keeper

Table 101. 17×17 mm Package i.MX25 Signal Contact Assignment (continued)

Contact Name	Contact Assignment	Power Rail	I/O Buffer Type	Direction after Reset[1]	Configuration after Reset[1]
SD3	D14	EMI1	DDR	INPUT	Keeper
SD4	D13	EMI1	DDR	INPUT	Keeper
SD5	A13	EMI1	DDR	INPUT	Keeper
SD6	D12	EMI1	DDR	INPUT	Keeper
SD7	A10	EMI1	DDR	INPUT	Keeper
SD8	B9	EMI1	DDR	INPUT	Keeper
SD9	D10	EMI1	DDR	INPUT	Keeper
SD10	B10	EMI1	DDR	INPUT	Keeper
SD11	C10	EMI1	DDR	INPUT	Keeper
SD12	C9	EMI1	DDR	INPUT	Keeper
SD13	A9	EMI1	DDR	INPUT	Keeper
SD14	D9	EMI1	DDR	INPUT	Keeper
SD15	A8	EMI1	DDR	INPUT	Keeper
SDBA1	A16	EMI2	DDR	OUTPUT	Low
SDBA0	B15	EMI2	DDR	OUTPUT	Low
DQM0	C12	EMI1	DDR	OUTPUT	High
DQM1	C8	EMI1	DDR	OUTPUT	High
RAS	C14	EMI2	DDR	OUTPUT	High
CAS	C16	EMI2	DDR	OUTPUT	High
SDWE	A15	EMI2	DDR	OUTPUT	High
SDCKE0	D15	EMI2	DDR	OUTPUT	High
SDCKE1	C15	EMI2	DDR	OUTPUT	High
SDCLK	B14	EMI2	DDR	OUTPUT	Low
SDCLK_B	A14	EMI2	DDR	OUTPUT	High
SDQS0	B12	EMI2	DDR	INPUT	Keeper
SDQS1	B8	EMI2	DDR	INPUT	Keeper
EB0	B3	EMI1	DDR	OUTPUT	High
EB1	C5	EMI1	DDR	OUTPUT	High
OE	D6	EMI1	DDR	OUTPUT	High
CS0	C3	EMI1	DDR	OUTPUT	High
CS1	D3	EMI1	DDR	OUTPUT	High
CS2	B16	EMI2	DDR	OUTPUT	High

Table 101. 17×17 mm Package i.MX25 Signal Contact Assignment (continued)

Contact Name	Contact Assignment	Power Rail	I/O Buffer Type	Direction after Reset[1]	Configuration after Reset[1]
CS3	A17	EMI2	DDR	OUTPUT	High
CS4	D5	EMI1	GPIO	OUTPUT	High
CS5	D4	EMI1	GPIO	OUTPUT	High
NF_CE0	D2	NFC	GPIO	OUTPUT	High
ECB	B2	EMI1	GPIO	INPUT	100 KΩ Pull-Up
LBA	B1	EMI1	DDR	OUTPUT	High
BCLK	D8	EMI1	DDR	OUTPUT	Low
RW	C4	EMI1	DDR	OUTPUT	High
NFWE_B	G4	NFC	GPIO	OUTPUT	High
NFRE_B	C1	NFC	GPIO	OUTPUT	High
NFALE	F4	NFC	GPIO	OUTPUT	Low
NFCLE	E4	NFC	GPIO	OUTPUT	Low
NFWP_B	H4	NFC	GPIO	OUTPUT	High
NFRB	C2	NFC	GPIO	INPUT	100 KΩ Pull-Up
D15	J2	NFC	GPIO	INPUT	Keeper
D14	J1	NFC	GPIO	INPUT	Keeper
D13	H2	NFC	GPIO	INPUT	Keeper
D12	H3	NFC	GPIO	INPUT	Keeper
D11	F1	NFC	GPIO	INPUT	100 KΩ Pull-Up
D10	F2	NFC	GPIO	INPUT	Keeper
D9	D1	NFC	GPIO	INPUT	Keeper
D8	E2	NFC	GPIO	INPUT	Keeper
D7	J3	NFC	GPIO	INPUT	Keeper
D6	H1	NFC	GPIO	INPUT	Keeper
D5	G1	NFC	GPIO	INPUT	Keeper
D4	G2	NFC	GPIO	INPUT	Keeper
D3	G3	NFC	GPIO	INPUT	Keeper
D2	E1	NFC	GPIO	INPUT	Keeper
D1	F3	NFC	GPIO	INPUT	Keeper
D0	E3	NFC	GPIO	INPUT	Keeper
LD0[2]	Y7	LCDC	GPIO	OUTPUT	Low
LD1[2]	V8	LCDC	GPIO	OUTPUT	Low

Table 101. 17×17 mm Package i.MX25 Signal Contact Assignment (continued)

Contact Name	Contact Assignment	Power Rail	I/O Buffer Type	Direction after Reset[1]	Configuration after Reset[1]
LD2[2]	W7	LCDC	GPIO	OUTPUT	Low
LD3[2]	U8	LCDC	GPIO	OUTPUT	Low
LD4[2]	Y6	LCDC	GPIO	OUTPUT	Low
LD5[2]	V7	LCDC	GPIO	OUTPUT	Low
LD6[2]	W6	LCDC	GPIO	OUTPUT	Low
LD7[2]	Y5	LCDC	GPIO	OUTPUT	Low
LD8[2]	V6	LCDC	GPIO	OUTPUT	Low
LD9[2]	W5	LCDC	GPIO	OUTPUT	Low
LD10[2]	Y4	LCDC	GPIO	OUTPUT	Low
LD11[2]	Y3	LCDC	GPIO	OUTPUT	Low
LD12[2]	V5	LCDC	GPIO	OUTPUT	Low
LD13[2]	W4	LCDC	GPIO	OUTPUT	Low
LD14[2]	V4	LCDC	GPIO	OUTPUT	Low
LD15[2]	W3	LCDC	GPIO	OUTPUT	Low
HSYNC[2]	U7	LCDC	GPIO	OUTPUT	Low
VSYNC[2]	U6	LCDC	GPIO	OUTPUT	Low
LSCLK[2]	U5	LCDC	GPIO	OUTPUT	Low
OE_ACD[2]	V3	LCDC	GPIO	OUTPUT	Low
CONTRAST	U4	LCDC	GPIO	OUTPUT	Low
PWM[2]	W2	LCDC	GPIO	INPUT	100 KΩ Pull-Down
CSI_D2	F18	CSI	GPIO	INPUT	Keeper
CSI_D3	E19	CSI	GPIO	INPUT	Keeper
CSI_D4	F19	CSI	GPIO	INPUT	Keeper
CSI_D5	G18	CSI	GPIO	INPUT	Keeper
CSI_D6	E20	CSI	GPIO	INPUT	Keeper
CSI_D7	E18	CSI	GPIO	INPUT	Keeper
CSI_D8	G19	CSI	GPIO	INPUT	Keeper
CSI_D9	F20	CSI	GPIO	INPUT	Keeper
CSI_MCLK[2]	H18	CSI	GPIO	OUTPUT	Low
CSI_VSYNC[2]	G20	CSI	GPIO	INPUT	Keeper
CSI_HSYNC[2]	H19	CSI	GPIO	INPUT	Keeper
CSI_PIXCLK[2]	H20	CSI	GPIO	INPUT	Keeper

Table 101. 17×17 mm Package i.MX25 Signal Contact Assignment (continued)

Contact Name	Contact Assignment	Power Rail	I/O Buffer Type	Direction after Reset[1]	Configuration after Reset[1]
I2C1_CLK	F17	CSI	GPIO	INPUT	100 KΩ Pull-Up
I2C1_DAT	G17	CSI	GPIO	INPUT	100 KΩ Pull-Up
CSPI1_MOSI	T4	MISC	GPIO	INPUT	100 KΩ Pull-Up
CSPI1_MISO	W1	MISC	GPIO	OUTPUT	Low
CSPI1_SS0	R4	MISC	GPIO	INPUT	100 KΩ Pull-Up
CSPI1_SS1	V2	MISC	GPIO	INPUT	100 KΩ Pull-Up
CSPI1_SCLK	U3	MISC	GPIO	INPUT	100 KΩ Pull-Up
CSPI1_RDY	V1	MISC	GPIO	INPUT	100 KΩ Pull-Up
UART1_RXD	U2	MISC	GPIO	INPUT	100 KΩ Pull-Up
UART1_TXD	U1	MISC	GPIO	OUTPUT	High
UART1_RTS	T3	MISC	GPIO	INPUT	100 KΩ Pull-Up
UART1_CTS	T2	MISC	GPIO	OUTPUT	High
UART2_RXD	P4	MISC	GPIO	INPUT	100 KΩ Pull-Up
UART2_TXD	T1	MISC	GPIO	OUTPUT	High
UART2_RTS	R3	MISC	GPIO	INPUT	100 KΩ Pull-Up
UART2_CTS	R2	MISC	GPIO	INPUT	-
SD1_CMD	K20	SDIO	GPIO	INPUT	47 KΩ Pull-Up
SD1_CLK	M20	SDIO	GPIO	OUTPUT	High
SD1_DATA0	L20	SDIO	GPIO	INPUT	47 KΩ Pull-Up
SD1_DATA1	N20	SDIO	GPIO	INPUT	47 KΩ Pull-Up
SD1_DATA2	M19	SDIO	GPIO	INPUT	47 KΩ Pull-Up
SD1_DATA3	J20	SDIO	GPIO	INPUT	47 KΩ Pull-Up
KPP_ROW0	N4	MISC	GPIO	INPUT	100 KΩ Pull-Up
KPP_ROW1	R1	MISC	GPIO	INPUT	100 KΩ Pull-Up
KPP_ROW2	P3	MISC	GPIO	INPUT	100 KΩ Pull-Up
KPP_ROW3	P2	MISC	GPIO	INPUT	100 KΩ Pull-Up
KPP_COL0	P1	MISC	GPIO	INPUT	100 KΩ Pull-Up
KPP_COL1	N3	MISC	GPIO	INPUT	100 KΩ Pull-Up
KPP_COL2	N2	MISC	GPIO	INPUT	100 KΩ Pull-Up
KPP_COL3	N1	MISC	GPIO	INPUT	100 KΩ Pull-Up
FEC_MDC	L1	MISC	GPIO	OUTPUT	Low
FEC_MDIO	L2	MISC	GPIO	INPUT	22 KΩ Pull-Up

Table 101. 17×17 mm Package i.MX25 Signal Contact Assignment (continued)

Contact Name	Contact Assignment	Power Rail	I/O Buffer Type	Direction after Reset[1]	Configuration after Reset[1]
FEC_TDATA0	L3	MISC	GPIO	OUTPUT	High
FEC_TDATA1	J4	MISC	GPIO	OUTPUT	High
FEC_TX_EN	M2	MISC	GPIO	OUTPUT	Low
FEC_RDATA0	M1	MISC	GPIO	INPUT	100 KΩ Pull-Down
FEC_RDATA1	M4	MISC	GPIO	INPUT	100 KΩ Pull-Down
FEC_RX_DV	M3	MISC	GPIO	INPUT	100 KΩ Pull-Down
FEC_TX_CLK	L4	MISC	GPIO	INPUT	100 KΩ Pull-Down
RTCK	W10	JTAG	GPIO	OUTPUT	Low
TCK	V10	JTAG	GPIO	INPUT	100 KΩ Pull-Down
TMS	Y9	JTAG	GPIO	INPUT	47 KΩ Pull-Up
TDI	W9	JTAG	GPIO	INPUT	47 KΩ Pull-Up
TDO	Y8	JTAG	GPIO	INPUT	-
TRSTB	V9	JTAG	GPIO	INPUT	47 KΩ Pull-Up
DE_B	W8	JTAG	GPIO	INPUT	47 KΩ Pull-Up
SJC_MOD	U9	JTAG	GPIO	INPUT	100 KΩ Pull-Up
USBPHY1_VBUS	K17	USBPHY1	ANALOG	ANALOG	-
USBPHY1_DP	L18	USBPHY1	ANALOG	ANALOG	-
USBPHY1_DM	K18	USBPHY1	ANALOG	ANALOG	-
USBPHY1_UID	J18	USBPHY1	ANALOG	ANALOG	-
USBPHY1_RREF	L17	USBPHY1_BIAS	ANALOG	ANALOG	-
USBPHY2_DM	Y19	USBPHY2	ANALOG	ANALOG	-
USBPHY2_DP	Y18	USBPHY2	ANALOG	ANALOG	-
GPIO_A	N19	CRM	GPIO	INPUT	-
GPIO_B	N18	CRM	GPIO	INPUT	100 KΩ Pull-Down
GPIO_C	P17	CRM	GPIO	INPUT	100 KΩ Pull-Down
GPIO_D	P19	CRM	GPIO	INPUT	-
GPIO_E	P18	CRM	GPIO	INPUT	100 KΩ Pull-Up
GPIO_F	R19	CRM	GPIO	INPUT	-
EXT_ARMCLK	R20	CRM	GPIO	INPUT	-
UPLL_BYPCLK	U20	CRM	GPIO	INPUT	-
VSTBY_REQ	R18	CRM	GPIO	OUTPUT	Low
VSTBY_ACK[3]	T20	CRM	GPIO	OUTPUT	Low

Table 101. 17×17 mm Package i.MX25 Signal Contact Assignment (continued)

Contact Name	Contact Assignment	Power Rail	I/O Buffer Type	Direction after Reset[1]	Configuration after Reset[1]
POWER_FAIL	T19	CRM	GPIO	INPUT	100 KΩ Pull-Down
RESET_B	T18	CRM	GPIO	INPUT	100 KΩ Pull-Up
POR_B	U19	CRM	GPIO	INPUT	100 KΩ Pull-Up
CLKO	V20	CRM	GPIO	OUTPUT	Low
BOOT_MODE0[2]	V19	CRM	GPIO	INPUT	100 KΩ Pull-Down
BOOT_MODE1[2]	W20	CRM	GPIO	INPUT	100 KΩ Pull-Down
CLK_SEL	W19	CRM	GPIO	INPUT	100 KΩ Pull-Down
TEST_MODE	V18	CRM	GPIO	INPUT	100 KΩ Pull-Down
OSC24M_EXTAL	Y15	OSC24M	ANALOG	ANALOG	-
OSC24M_XTAL	Y16	OSC24M	ANALOG	ANALOG	-
OSC32K_EXTAL	Y11	DRYICE	ANALOG	ANALOG	-
OSC32K_XTAL	Y10	DRYICE	ANALOG	ANALOG	-
TAMPER_A	N10	DRYICE	ANALOG	ANALOG	-
TAMPER_B	N11	DRYICE	ANALOG	ANALOG	-
MESH_C	P11	DRYICE	ANALOG	ANALOG	-
MESH_D	P12	DRYICE	ANALOG	ANALOG	-
OSC_BYP	Y12	DRYICE	ANALOG	ANALOG	-
XP	V14	ADC	ANALOG	ANALOG	-
XN	U13	ADC	ANALOG	ANALOG	-
YP	V13	ADC	ANALOG	ANALOG	-
YN	W12	ADC	ANALOG	ANALOG	-
WIPER	U14	ADC	ANALOG	ANALOG	-
INAUX0	U11	ADC	ANALOG	ANALOG	-
INAUX1	V12	ADC	ANALOG	ANALOG	-
INAUX2	U12	ADC	ANALOG	ANALOG	-

1 The state immediately after reset and before ROM firmware or software has executed.

2 During power-on reset this port acts as input for fuse override signal.

3 During power-on reset this port acts as output for diagnostic signal.

Table 102 lists the 17×17 mm package i.MX25 no connect contact assignments.

Table 102. 17×17 mm Package i.MX25 No Connect Contact Assignments

Signal Name	Contact Assignment
NC_BGA_B20	B20
NC_BGA_E17	E17
NC_BGA_H17	H17
NC_BGA_J19	J19
NC_BGA_M18	M18
NC_BGA_P20	P20
NC_BGA_U15	U15
NC_BGA_U16	U16
NC_BGA_V15	V15
NC_BGA_V16	V16
NC_BGA_V17	V17
NC_BGA_W14	W14
NC_BGA_Y2	Y2
NC_BGA_Y14	Y14
NC_BGA_Y17	Y17

4.4 i.MX25 17x17 Package Ball Map

Table 103 shows the i.MX25 17×17 package ball map.

Table 103. i.MX25 17×17 Package Ball Map

	1	2	3	4	5	6	7	8	9	10	11	12	13	14	15	16	17	18	19	20
A	QGND	A10	A14	A19	A22	A23	A25	SD15	SD13	SD7	QGND	SD0	SD5	SDCLK_B	SDWE	SDBA1	CS3	A0	A5	QGND
B	LBA	ECB	EB0	A15	A17	A20	A24	SDQS1	SD8	SD10	QGND	SDQS0	SD2	SDCLK	SDBA0	CS2	A1	A3	A7	NC_BGA_B20
C	NFRE_B	NFRB	CS0	RW	EB1	A16	A21	DQM1	SD12	SD11	QGND	DQM0	SD1	RAS	SDCKE1	CAS	A2	A9	A6	A4
D	D9	NF_CE0	CS1	CS5	CS4	OE	A18	BCLK	SD14	SD9	QGND	SD6	SD4	SD3	SDCKE0	MA10	A12	A8	A13	A11
E	D2	D8	D0	NFCLE	QGND	QGND	QGND	QGND	QGND	QGND	QGND	QGND	QGND	QGND	QGND	QGND	NC_BGA_E17	CSI_D7	CSI_D3	CSI_D6
F	D11	D10	D1	NFALE	QGND	QGND	QGND	QGND	QGND	QGND	QGND	QGND	QGND	QGND	QGND	QGND	I2C1_CLK	CSI_D2	CSI_D4	CSI_D9
G	D5	D4	D3	NFWE_B	QGND	NVCC_EMI1	NVCC_EMI1	NVCC_EMI1	NVCC_EMI1	QGND	QVDD	NVCC_EMI2	NVCC_EMI2	NVCC_EMI2	NVCC_EMI2	QGND	I2C1_DAT	CSI_D5	CSI_D8	CSI_VSYNC
H	D6	D13	D12	NFWP_B	QGND	NVCC_EMI1	NVCC_EMI1	NVCC_EMI1	QGND	QGND	QGND	NVCC_EMI2	NVCC_EMI2	NVCC_EMI2	QGND	QGND	NC_BGA_H17	CSI_MCLK	CSI_HSYNC	CSI_PIXCLK
J	D14	D15	D7	FEC_TDATA1	QGND	NVCC_EMI1	NVCC_EMI1	QVDD	QGND	QGND	QGND	QVDD	NVCC_CSI	NVCC_CSI	QGND	QGND	USBPHY1_VSSA_BIAS	USBPHY1_UID	NC_BGA_J19	SD1_DATA3

Table 103. i.MX25 17×17 Package Ball Map (continued)

T	R	P	N	M	L	K	
UART2_TXD	KPP_ROW1	KPP_COL0	KPP_COL3	FEC_RDATA0	FEC_MDC	QGND	**1**
UART1_CTS	UART2_CTS	KPP_ROW3	KPP_COL2	FEC_TX_EN	FEC_MDIO	QGND	**2**
UART1_RTS	UART2_RTS	KPP_ROW2	KPP_COL1	FEC_RX_DV	FEC_TDATA0	QGND	**3**
CSPI1_MOSI	CSPI1_SS0	UART2_RXD	KPP_ROW0	FEC_RDATA1	FEC_TX_CLK	QGND	**4**
QGND	QGND	QGND	NVCC_MISC	QVDD	QGND	QGND	**5**
QGND	NVCC_LCDC	NVCC_LCDC	NVCC_MISC	QVDD	NVCC_NFC	QVDD	**6**
QGND	NVCC_LCDC	NVCC_LCDC	NVCC_MISC	QVDD	NVCC_NFC	QVDD	**7**
QGND	QGND	QVDD	QVDD	QGND	NVCC_NFC	QGND	**8**
QGND	QGND	QVDD	QGND	QGND	QGND	QGND	**9**
QGND	QGND	BAT_VDD	TAMPER_A	QGND	QGND	QGND	**10**
QGND	QGND	MESH_C	TAMPER_B	QGND	QGND	QGND	**11**
QGND	QGND	MESH_D	QGND	QGND	QGND	QVDD	**12**
QGND	QGND	QGND	QGND	QGND	QGND	QGND	**13**
QGND	QGND	QGND	NVCC_CRM	QGND	QGND	QGND	**14**
QGND	QGND	QGND	QGND	QGND	QGND	QGND	**15**
QGND	QGND	QGND	QGND	UPLL_GND	UPLL_VDD	USBPHY1_VDDA	**16**
FUSE_VDD	NVCC_SDIO	GPIO_C	USBPHY1_UPLLVSS	USBPHY1_UPLLVDD	USBPHY1_RREF	USBPHY1_VBUS	**17**
RESET_B	VSTBY_REQ	GPIO_E	GPIO_B	NC_BGA_M18	USBPHY1_DP	USBPHY1_DM	**18**
POWER_FAIL	GPIO_F	GPIO_D	GPIO_A	SD1_DATA2	USBPHY1_VSSA	USBPHY1_VDDA_BIAS	**19**
VSTBY_ACK	EXT_ARMCLK	NC_BGA_P20	SD1_DATA1	SD1_CLK	SD1_DATA0	SD1_CMD	**20**

Table 103. i.MX25 17×17 Package Ball Map (continued)

Y	W	V	U	
QGND	CSPI1_MISO	CSPI1_RDY	UART1_TXD	**1**
NC_BGA_Y2	PWM	CSPI1_SS1	UART1_RXD	**2**
LD11	LD15	OE_ACD	CSPI1_SCLK	**3**
LD10	LD13	LD14	CONTRAST	**4**
LD7	LD9	LD12	LSCLK	**5**
LD4	LD6	LD8	VSYNC	**6**
LD0	LD2	LD5	HSYNC	**7**
TDO	DE_B	LD1	LD3	**8**
TMS	TDI	TRSTB	SJC_MOD	**9**
OSC32K_XTAL	RTCK	TCK	NVCC_JTAG	**10**
OSC32K_EXTAL	NVCC_DRYICE	REF	INAUX0	**11**
OSC_BYP	YN	INAUX1	INAUX2	**12**
NGND_ADC	NVCC_ADC	YP	XN	**13**
NC_BGA_Y14	NC_BGA_W14	XP	WIPER	**14**
OSC24M_EXTAL	OSC24M_GND	NC_BGA_V15	NC_BGA_U15	**15**
OSC24M_XTAL	OSC24M_VDD	NC_BGA_V16	NC_BGA_U16	**16**
NC_BGA_Y17	USBPHY2_VSS	NC_BGA_V17	MPLL_GND	**17**
USBPHY2_DP	USBPHY2_VDD	TEST_MODE	MPLL_VDD	**18**
USBPHY2_DM	CLK_SEL	BOOT_MODE0	POR_B	**19**
QGND	BOOT_MODE1	CLKO	UPLL_BYPCLK	**20**

5 Revision History

Table 104 summarizes revisions to this document.

Table 104. Revision History

Rev. Number	Date	Substantive Change(s)
Rev. 10	05/2013	• Updated DDR timing parameters in – Table 47, “SDRAM Self-Refresh Cycle Timing Parameters” – Table 49, “Mobile DDR SDRAM Read Cycle Timing Parameters” – Table 51, “tIS, tIH Derating Values for DDR2-400, DDR2-533” • Table 101, “17×17 mm Package i.MX25 Signal Contact Assignment”: Updated configuration after reset for contact D11 to “100 KΩ Pull-Up”
Rev. 9	06/2012	• In Section 1, “Introduction,” modified the first paragraph. • In Table 1, "Ordering Information," on page 3, removed exclamation marks from table rows and also removed table footnote. • In Table 3, "i.MX25 Digital and Analog Modules," on page 6, modified description of block mnemonic, SIM. • Updated Section 3.2.1, “Power-Up Sequence.” • Updated Section 3.2.3, “SRTC DryIce Power-Up/Down Sequence.” • In Figure 38 and Table 56: —Removed “_B” and added an overbar to signal names, CSx_B, RW_B, OE_B, EBy_B, LBA_B, ECB_B, and DTACK_B —Changed CSx and CSy to CS[x] and CS[y], respectively • In Table 57, "WEIM Asynchronous Timing Parameters Relative to Chip Select Table," on page 76: —Changed $\overline{WE}$ and WEA to $\overline{RW}$ and RWA, respectively, for reference number, WE33 —Changed $\overline{WE}$ and WEN to $\overline{RW}$ and RWN, respectively, for reference number, WE34 —Changed RLBA, RLBN, and ADH to LBA, LBN, and LAH, respectively, for reference number, WE35A —Changed RBEA to EBRA for reference number, WE37 —Changed RBEN to EBRN for reference number, WE38 —Changed WCSA to CSA for reference numbers, WE41 and WE41A —Changed WLBA, WLBN, and ADH to LBA, LBN, and LAH, respectively, for reference number, WE41A —Changed WBEA and WBEN to EBWA and EBWN, respectively, for reference numbers, WE45 and WE46 • Updated the note after Table 57. • In Table 99, "USB Timing Specification in Parallel Mode," on page 124, swapped the values of Min and Max columns for IDs, US15 and US16.
Rev. 8	01/2011	• Updated the first paragraph of Section 3.2.3, “SRTC DryIce Power-Up/Down Sequence.” • Updated Table 4, "Signal Considerations," on page 9 for NVCC_DRYICE signal. • Updated the third note for Table 6, "DC Operating Conditions," on page 11. • Added Table 9, "Recommended External Crystal Specifications," on page 13. • Added Table 10, "Recommended External Reference Clock Specifications," on page 13. • In Table 27, "AC Parameters for SDRAM I/O," on page 36, the frequency specification has been updated to 133 MHz. • In Table 28, "AC Parameters for SDRAM pbijtov18_33_ddr_clk I/O," on page 37, the frequency specification has been updated to 133 MHz. • Added a note for the line NVCC_DRYICE in Table 100, "17×17 mm Package Ground, Power Sense, and Reference Contact Assignments," on page 125. • Updated Table 101, "17×17 mm Package i.MX25 Signal Contact Assignment," on page 127.
Rev. 7	—	This revision number was skipped so the Consumer/Industrial and Automotive revision numbers can be in sync.

Table 104. Revision History (continued)

Rev. Number	Date	Substantive Change(s)
Rev. 6	—	This revision number was skipped so the Consumer/Industrial and Automotive revision numbers can be in sync.
Rev. 5	09/2010	• Added Section 3.2.3, “SRTC DryIce Power-Up/Down Sequence.”
Rev. 4	08/2010	• Updated Table 56, "WEIM Bus Timing Parameters," on page 69 to include new row for WE19. • Updated Table 6, "DC Operating Conditions," on page 11 to include Min and Max values of FUSE_VDD.
Rev. 3	06/2010	• Updated Table 1, “Ordering Information,” to include new part numbers.
Rev. 2	03/2010	• Updated Table 1, “Ordering Information,” to include new part numbers. • Added Table 2, “i.MX25 Parts Functional Differences.” • Added Section 3.3, “Power Characteristics.”
Rev. 1	10/2009	• Updated Table 1, “Ordering Information,” to include new part numbers. • Updated DRYICE description in Table 3, “i.MX25 Digital and Analog Modules.” • Updated REF signal description in Table 4, “Signal Considerations.” • Updated ESD damage immunity values in Table 5, “DC Absolute Maximum Ratings.” • Updated values in Table 13, “i.MX25 Power Mode Current Consumption.” • Added a note on timing in Section 3.2.1, “Power-Up Sequence.” • Added Table 14, “iMX25 Reduced Power Mode Current Consumption.” • Updated Table 55, “NFC Timing Parameters.” • Updated values in Table 56, “WEIM Bus Timing Parameters. • Updated Table 85, “Touchscreen ADC Electrical Specifications.”
Rev. 0	6/2009	Initial release.

How to Reach Us:

Home Page:
freescale.com

Web Support:
freescale.com/support

Information in this document is provided solely to enable system and software implementers to use Freescale products. There are no express or implied copyright licenses granted hereunder to design or fabricate any integrated circuits based on the information in this document.

Freescale reserves the right to make changes without further notice to any products herein. Freescale makes no warranty, representation, or guarantee regarding the suitability of its products for any particular purpose, nor does Freescale assume any liability arising out of the application or use of any product or circuit, and specifically disclaims any and all liability, including without limitation consequential or incidental damages. “Typical” parameters that may be provided in Freescale data sheets and/or specifications can and do vary in different applications, and actual performance may vary over time. All operating parameters, including “typicals,” must be validated for each customer application by customer’s technical experts. Freescale does not convey any license under its patent rights nor the rights of others. Freescale sells products pursuant to standard terms and conditions of sale, which can be found at the following address: freescale.com/SalesTermsandConditions.

Freescale, the Freescale logo, and the Energy Efficient Solutions logo are trademarks of Freescale Semiconductor, Inc., Reg. U.S. Pat. & Tm. Off. All other product or service names are the property of their respective owners. ARM is the registered trademark of ARM Limited. ARM 926EJ-S is the trademark of ARM Limited.
© 2009-2013 Freescale Semiconductor, Inc.

Document Number: IMX25AEC
Rev. 10
06/2013