MC9S08AC60
MC9S08AC48
MC9S08AC32

Data Sheet

HCS08
Microcontrollers

MC9S08AC60
Rev. 3
8/2011

freescale.com

MC9S08AC60 Series Features

8-Bit HCS08 Central Processor Unit (CPU)

- 40-MHz HCS08 CPU (central processor unit)
- 20-MHz internal bus frequency
- HC08 instruction set with added BGND instruction

Development Support

- Background debugging system
- Breakpoint capability to allow single breakpoint setting during in-circuit debugging (plus two more breakpoints in on-chip debug module)
- On-chip in-circuit emulator (ICE) Debug module containing two comparators and nine trigger modes. Eight deep FIFO for storing change-of-flow addresses and event-only data. Supports both tag and force breakpoints.
- Support for up to 32 interrupt/reset sources

Memory Options

- Up to 60 KB of on-chip FLASH memory with security options
- Up to 2 KB of on-chip RAM

Clock Source Options

- Clock source options include crystal, resonator, external clock, or internally generated clock with precision NVM trimming using ICG module

System Protection

- Optional watchdog computer operating properly (COP) reset with option to run from independent 1kHz internal clock source or bus clock
- Low-voltage detection with reset or interrupt
- Illegal opcode detection with reset
- Cyclic Redundancy Check (CRC) Module to support fast cyclic redundancy checks on memory.

Power-Saving Modes

- Wait plus two stops

Peripherals

- **ADC** — Up to 16-channel, 10-bit analog-to-digital converter with automatic compare function
- **SCI** — Two serial communications interface modules with optional 13-bit break. supports LIN 2.0 Protocol and SAE J2602; Master extended break generation; Slave extended break detection
- **SPI** — Serial peripheral interface module
- **IIC** — Inter-integrated circuit bus module to operate at up to 100 kbps with maximum bus loading; capable of higher baudrates with reduced loading. 10-bit address extension option.
- **Timers** — Up to two 2-channel and one 6-channel 16-bit timer/pulse-width modulator (TPM) module: Selectable input capture, output compare, and edge-aligned PWM capability on each channel. Each timer module may be configured for buffered, centered PWM (CPWM) on all channels
- **KBI** — Up to 8-pin keyboard interrupt module
- **CRC** - Hardware CRC generation using a 16-bit shift register

Input/Output

- Up to 54 general-purpose input/output (I/O) pins
- Software selectable pullups on ports when used as inputs
- Software selectable slew rate control on ports when used as outputs
- Software selectable drive strength on ports when used as outputs
- Master reset pin and power-on reset (POR)
- Internal pullup on $\overline{\text{RESET}}$, IRQ, and BKGD/MS pins to reduce customer system cost

Package Options

- 64-pin quad flat package (QFP)
- 64-pin low-profile quad flat package (LQFP)
- 48-pin quad flat pack no lead package (QFN)
- 44-pin low-profile quad flat package (LQFP)
- 32-pin low-profile quad flat package (LQFP)

MC9S08AC60 Series Data Sheet

Covers MC9S08AC60
MC9S08AC48
MC9S08AC32

MC9S08AC60 Series
Rev. 3
8/2011

freescale™
semiconductor

Revision History

To provide the most up-to-date information, the revision of our documents on the World Wide Web will be the most current. Your printed copy may be an earlier revision. To verify you have the latest information available, refer to:

http://freescale.com/

The following revision history table summarizes changes contained in this document. For your convenience, the page number designators have been linked to the appropriate location.

Revision Number	Revision Date	Description of Changes
1	2/2008	Preliminary customer release.
2	3/2008	Market Launch Release.
3	8/2011	Added V_{BG} and I_{IC} in the Table A-6. Added two figures of Figure 4-2 and Figure 4-3 to replace the old figure of “FLASH Program and Erase Flowchart”. Updated Table 15-8. Updated RI_{DD} in the Table A-7. Updated t_{RTI} in the Table A-12.

Freescale™ and the Freescale logo are trademarks of Freescale Semiconductor, Inc.
© Freescale Semiconductor, Inc., 2008-2011. All rights reserved.

List of Chapters

Chapter	Title	Page
Chapter 1	Introduction	19
Chapter 2	Pins and Connections	25
Chapter 3	Modes of Operation	35
Chapter 4	Memory	41
Chapter 5	Resets, Interrupts, and System Configuration	67
Chapter 6	Parallel Input/Output	85
Chapter 7	Central Processor Unit (S08CPUV2)	109
Chapter 8	Cyclic Redundancy Check (S08CRCV1)	129
Chapter 9	Analog-to-Digital Converter (S08ADC10V1)	137
Chapter 10	Internal Clock Generator (S08ICGV4)	165
Chapter 11	Inter-Integrated Circuit (S08IICV2)	193
Chapter 12	Keyboard Interrupt (S08KBIV1)	211
Chapter 13	Serial Communications Interface (S08SCIV4)	217
Chapter 14	Serial Peripheral Interface (S08SPIV3)	237
Chapter 15	Timer/PWM (S08TPMV3)	253
Chapter 16	Development Support	283
Appendix A	Electrical Characteristics and Timing Specifications	305
Appendix B	Ordering Information and Mechanical Drawings	333

Contents

Section Number **Title** **Page**

Chapter 1
Introduction

1.1 Overview 19
1.2 MCU Block Diagrams 20
1.3 System Clock Distribution 22

Chapter 2
Pins and Connections

2.1 Introduction 25
2.2 Device Pin Assignment 25
2.3 Recommended System Connections 29
2.3.1 Power (V_{DD}, V_{SS}, V_{DDAD}, V_{SSAD}) 31
2.3.2 Oscillator (XTAL, EXTAL) 31
2.3.3 $\overline{\text{RESET}}$ Pin 31
2.3.4 Background/Mode Select (BKGD/MS) 32
2.3.5 ADC Reference Pins (V_{REFH}, V_{REFL}) 32
2.3.6 External Interrupt Pin (IRQ) 32
2.3.7 General-Purpose I/O and Peripheral Ports 33

Chapter 3
Modes of Operation

3.1 Introduction 35
3.2 Features 35
3.3 Run Mode 35
3.4 Active Background Mode 35
3.5 Wait Mode 36
3.6 Stop Modes 36
3.6.1 Stop2 Mode 37
3.6.2 Stop3 Mode 38
3.6.3 Active BDM Enabled in Stop Mode 38
3.6.4 LVD Enabled in Stop Mode 39
3.6.5 On-Chip Peripheral Modules in Stop Modes 39

Chapter 4
Memory

4.1 MC9S08AC60 Series Memory Map 41
4.1.1 Reset and Interrupt Vector Assignments 43

Section Number	Title	Page

4.2 Register Addresses and Bit Assignments 44
4.3 RAM 50
4.4 FLASH 51
4.4.1 Features 51
4.4.2 Program and Erase Times 51
4.4.3 Program and Erase Command Execution 52
4.4.4 Burst Program Execution 54
4.4.5 Access Errors 57
4.4.6 FLASH Block Protection 57
4.4.7 Vector Redirection 58
4.5 Security 58
4.6 FLASH Registers and Control Bits 59
4.6.1 FLASH Clock Divider Register (FCDIV) 59
4.6.2 FLASH Options Register (FOPT and NVOPT) 61
4.6.3 FLASH Configuration Register (FCNFG) 61
4.6.4 FLASH Protection Register (FPROT and NVPROT) 63
4.6.5 FLASH Status Register (FSTAT) 63
4.6.6 FLASH Command Register (FCMD) 64

Chapter 5
Resets, Interrupts, and System Configuration

5.1 Introduction 67
5.2 Features 67
5.3 MCU Reset 67
5.4 Computer Operating Properly (COP) Watchdog 68
5.5 Interrupts 69
5.5.1 Interrupt Stack Frame 70
5.5.2 External Interrupt Request (IRQ) Pin 70
5.5.3 Interrupt Vectors, Sources, and Local Masks 71
5.6 Low-Voltage Detect (LVD) System 73
5.6.1 Power-On Reset Operation 73
5.6.2 LVD Reset Operation 73
5.6.3 LVD Interrupt Operation 73
5.6.4 Low-Voltage Warning (LVW) 73
5.7 Real-Time Interrupt (RTI) 73
5.8 MCLK Output 74
5.9 Reset, Interrupt, and System Control Registers and Control Bits 74
5.9.1 Interrupt Pin Request Status and Control Register (IRQSC) 75
5.9.2 System Reset Status Register (SRS) 76
5.9.3 System Background Debug Force Reset Register (SBDFR) 77
5.9.4 System Options Register (SOPT) 77
5.9.5 System MCLK Control Register (SMCLK) 78

Section Number	Title	Page

5.9.6 System Device Identification Register (SDIDH, SDIDL) 79
5.9.7 System Real-Time Interrupt Status and Control Register (SRTISC) 80
5.9.8 System Power Management Status and Control 1 Register (SPMSC1) 81
5.9.9 System Power Management Status and Control 2 Register (SPMSC2) 82
5.9.10 System Options Register 2 (SOPT2) 83

Chapter 6
Parallel Input/Output

6.1 Introduction 85
6.2 Pin Descriptions 85
6.3 Parallel I/O Control 85
6.4 Pin Control 86
6.4.1 Internal Pullup Enable 87
6.4.2 Output Slew Rate Control Enable 87
6.4.3 Output Drive Strength Select 87
6.5 Pin Behavior in Stop Modes 88
6.6 Parallel I/O and Pin Control Registers 88
6.6.1 Port A I/O Registers (PTAD and PTADD) 88
6.6.2 Port A Pin Control Registers (PTAPE, PTASE, PTADS) 89
6.6.3 Port B I/O Registers (PTBD and PTBDD) 91
6.6.4 Port B Pin Control Registers (PTBPE, PTBSE, PTBDS) 92
6.6.5 Port C I/O Registers (PTCD and PTCDD) 94
6.6.6 Port C Pin Control Registers (PTCPE, PTCSE, PTCDS) 95
6.6.7 Port D I/O Registers (PTDD and PTDDD) 97
6.6.8 Port D Pin Control Registers (PTDPE, PTDSE, PTDDS) 98
6.6.9 Port E I/O Registers (PTED and PTEDD) 100
6.6.10 Port E Pin Control Registers (PTEPE, PTESE, PTEDS) 101
6.6.11 Port F I/O Registers (PTFD and PTFDD) 103
6.6.12 Port F Pin Control Registers (PTFPE, PTFSE, PTFDS) 104
6.6.13 Port G I/O Registers (PTGD and PTGDD) 106
6.6.14 Port G Pin Control Registers (PTGPE, PTGSE, PTGDS) 107

Chapter 7
Central Processor Unit (S08CPUV2)

7.1 Introduction 109
7.1.1 Features 109
7.2 Programmer's Model and CPU Registers 110
7.2.1 Accumulator (A) 110
7.2.2 Index Register (H:X) 110
7.2.3 Stack Pointer (SP) 111
7.2.4 Program Counter (PC) 111
7.2.5 Condition Code Register (CCR) 111

Section Number	Title	Page

7.3 Addressing Modes 112
7.3.1 Inherent Addressing Mode (INH) 113
7.3.2 Relative Addressing Mode (REL) 113
7.3.3 Immediate Addressing Mode (IMM) 113
7.3.4 Direct Addressing Mode (DIR) 113
7.3.5 Extended Addressing Mode (EXT) 113
7.3.6 Indexed Addressing Mode 113
7.4 Special Operations 114
7.4.1 Reset Sequence 115
7.4.2 Interrupt Sequence 115
7.4.3 Wait Mode Operation 116
7.4.4 Stop Mode Operation 116
7.4.5 BGND Instruction 116
7.5 HCS08 Instruction Set Summary 117

Chapter 8
Cyclic Redundancy Check (S08CRCV1)

8.1 Introduction 129
8.1.1 Features 129
8.1.2 Modes of Operation 131
8.1.3 Block Diagram 131
8.2 External Signal Description 131
8.3 Register Definition 132
8.3.1 Memory Map 132
8.3.2 Register Descriptions 132
8.4 Functional Description 133
8.4.1 ITU-T (CCITT) recommendations & expected CRC results 134
8.5 Initialization Information 134

Chapter 9
Analog-to-Digital Converter (S08ADC10V1)

9.1 Overview 137
9.2 Channel Assignments 137
9.2.1 Alternate Clock 138
9.2.2 Hardware Trigger 138
9.2.3 Temperature Sensor 139
9.2.4 Features 141
9.2.5 Block Diagram 141
9.3 External Signal Description 142
9.3.1 Analog Power (V_{DDAD}) 143
9.3.2 Analog Ground (V_{SSAD}) 143
9.3.3 Voltage Reference High (V_{REFH}) 143

Section Number	Title	Page

9.3.4 Voltage Reference Low (V_{REFL}) 143
9.3.5 Analog Channel Inputs (ADx) 143
9.4 Register Definition 143
9.4.1 Status and Control Register 1 (ADCSC1) 143
9.4.2 Status and Control Register 2 (ADCSC2) 145
9.4.3 Data Result High Register (ADCRH) 146
9.4.4 Data Result Low Register (ADCRL) 146
9.4.5 Compare Value High Register (ADCCVH) 147
9.4.6 Compare Value Low Register (ADCCVL) 147
9.4.7 Configuration Register (ADCCFG) 147
9.4.8 Pin Control 1 Register (APCTL1) 149
9.4.9 Pin Control 2 Register (APCTL2) 150
9.4.10 Pin Control 3 Register (APCTL3) 151
9.5 Functional Description 152
9.5.1 Clock Select and Divide Control 152
9.5.2 Input Select and Pin Control 153
9.5.3 Hardware Trigger 153
9.5.4 Conversion Control 153
9.5.5 Automatic Compare Function 156
9.5.6 MCU Wait Mode Operation 156
9.5.7 MCU Stop3 Mode Operation 156
9.5.8 MCU Stop1 and Stop2 Mode Operation 157
9.6 Initialization Information 157
9.6.1 ADC Module Initialization Example 157
9.7 Application Information 159
9.7.1 External Pins and Routing 159
9.7.2 Sources of Error 161

Chapter 10
Internal Clock Generator (S08ICGV4)

10.1 Introduction 165
10.1.1 Features 168
10.1.2 Modes of Operation 168
10.1.3 Block Diagram 169
10.2 External Signal Description 170
10.2.1 EXTAL — External Reference Clock / Oscillator Input 170
10.2.2 XTAL — Oscillator Output 170
10.2.3 External Clock Connections 170
10.2.4 External Crystal/Resonator Connections 170
10.3 Register Definition 171
10.3.1 ICG Control Register 1 (ICGC1) 171
10.3.2 ICG Control Register 2 (ICGC2) 173

10.3.3 ICG Status Register 1 (ICGS1) 174
10.3.4 ICG Status Register 2 (ICGS2) 175
10.3.5 ICG Filter Registers (ICGFLTU, ICGFLTL) 175
10.3.6 ICG Trim Register (ICGTRM) 176
10.4 Functional Description 176
10.4.1 Off Mode (Off) 177
10.4.2 Self-Clocked Mode (SCM) 177
10.4.3 FLL Engaged, Internal Clock (FEI) Mode 178
10.4.4 FLL Engaged Internal Unlocked 179
10.4.5 FLL Engaged Internal Locked 179
10.4.6 FLL Bypassed, External Clock (FBE) Mode 179
10.4.7 FLL Engaged, External Clock (FEE) Mode 179
10.4.8 FLL Lock and Loss-of-Lock Detection 180
10.4.9 FLL Loss-of-Clock Detection 181
10.4.10 Clock Mode Requirements 182
10.4.11 Fixed Frequency Clock 183
10.4.12 High Gain Oscillator 183
10.5 Initialization/Application Information 183
10.5.1 Introduction 183
10.5.2 Example #1: External Crystal = 32 kHz, Bus Frequency = 4.19 MHz 185
10.5.3 Example #2: External Crystal = 4 MHz, Bus Frequency = 20 MHz 187
10.5.4 Example #3: No External Crystal Connection, 5.4 MHz Bus Frequency 189
10.5.5 Example #4: Internal Clock Generator Trim 191

Chapter 11
Inter-Integrated Circuit (S08IICV2)

11.1 Introduction 193
11.1.1 Features 195
11.1.2 Modes of Operation 195
11.1.3 Block Diagram 195
11.2 External Signal Description 196
11.2.1 SCL — Serial Clock Line 196
11.2.2 SDA — Serial Data Line 196
11.3 Register Definition 196
11.3.1 IIC Address Register (IICA) 197
11.3.2 IIC Frequency Divider Register (IICF) 197
11.3.3 IIC Control Register (IICC1) 200
11.3.4 IIC Status Register (IICS) 200
11.3.5 IIC Data I/O Register (IICD) 201
11.3.6 IIC Control Register 2 (IICC2) 202
11.4 Functional Description 203
11.4.1 IIC Protocol 203

11.4.2 10-bit Address 206
11.4.3 General Call Address 207
11.5 Resets 207
11.6 Interrupts 207
11.6.1 Byte Transfer Interrupt 207
11.6.2 Address Detect Interrupt 208
11.6.3 Arbitration Lost Interrupt 208
11.7 Initialization/Application Information 209

Chapter 12
Keyboard Interrupt (S08KBIV1)

12.1 Introduction 211
12.1.1 Features 211
12.1.2 KBI Block Diagram 213
12.2 Register Definition 213
12.2.1 KBI Status and Control Register (KBISC) 214
12.2.2 KBI Pin Enable Register (KBIPE) 215
12.3 Functional Description 215
12.3.1 Pin Enables 215
12.3.2 Edge and Level Sensitivity 215
12.3.3 KBI Interrupt Controls 216

Chapter 13
Serial Communications Interface (S08SCIV4)

13.1 Introduction 217
13.1.1 Features 219
13.1.2 Modes of Operation 219
13.1.3 Block Diagram 220
13.2 Register Definition 222
13.2.1 SCI Baud Rate Registers (SCIxBDH, SCIxBDL) 222
13.2.2 SCI Control Register 1 (SCIxC1) 223
13.2.3 SCI Control Register 2 (SCIxC2) 224
13.2.4 SCI Status Register 1 (SCIxS1) 225
13.2.5 SCI Status Register 2 (SCIxS2) 227
13.2.6 SCI Control Register 3 (SCIxC3) 228
13.2.7 SCI Data Register (SCIxD) 229
13.3 Functional Description 229
13.3.1 Baud Rate Generation 229
13.3.2 Transmitter Functional Description 230
13.3.3 Receiver Functional Description 231
13.3.4 Interrupts and Status Flags 233
13.3.5 Additional SCI Functions 234

Section Number	Title	Page

Chapter 14
Serial Peripheral Interface (S08SPIV3)

14.1 Introduction 237
14.1.1 Features 239
14.1.2 Block Diagrams 239
14.1.3 SPI Baud Rate Generation 241
14.2 External Signal Description 242
14.2.1 SPSCK — SPI Serial Clock 242
14.2.2 MOSI — Master Data Out, Slave Data In 242
14.2.3 MISO — Master Data In, Slave Data Out 242
14.2.4 SS — Slave Select 242
14.3 Modes of Operation 243
14.3.1 SPI in Stop Modes 243
14.4 Register Definition 243
14.4.1 SPI Control Register 1 (SPIC1) 243
14.4.2 SPI Control Register 2 (SPIC2) 244
14.4.3 SPI Baud Rate Register (SPIBR) 245
14.4.4 SPI Status Register (SPIS) 246
14.4.5 SPI Data Register (SPID) 247
14.5 Functional Description 248
14.5.1 SPI Clock Formats 248
14.5.2 SPI Interrupts 251
14.5.3 Mode Fault Detection 251

Chapter 15
Timer/PWM (S08TPMV3)

15.1 Introduction 253
15.2 Features 253
15.3 TPMV3 Differences from Previous Versions 255
15.3.1 Migrating from TPMV1 257
15.3.2 Features 258
15.3.3 Modes of Operation 258
15.3.4 Block Diagram 259
15.4 Signal Description 261
15.4.1 Detailed Signal Descriptions 261
15.5 Register Definition 265
15.5.1 TPM Status and Control Register (TPMxSC) 265
15.5.2 TPM-Counter Registers (TPMxCNTH:TPMxCNTL) 266
15.5.3 TPM Counter Modulo Registers (TPMxMODH:TPMxMODL) 267
15.5.4 TPM Channel n Status and Control Register (TPMxCnSC) 268
15.5.5 TPM Channel Value Registers (TPMxCnVH:TPMxCnVL) 270
15.6 Functional Description 271

15.6.1 Counter 271
15.6.2 Channel Mode Selection 274
15.7 Reset Overview 277
15.7.1 General 277
15.7.2 Description of Reset Operation 277
15.8 Interrupts 277
15.8.1 General 277
15.8.2 Description of Interrupt Operation 278
15.9 The Differences from TPM v2 to TPM v3 279

Chapter 16
Development Support

16.1 Introduction 283
16.1.1 Features 284
16.2 Background Debug Controller (BDC) 284
16.2.1 BKGD Pin Description 285
16.2.2 Communication Details 286
16.2.3 BDC Commands 290
16.2.4 BDC Hardware Breakpoint 292
16.3 On-Chip Debug System (DBG) 293
16.3.1 Comparators A and B 293
16.3.2 Bus Capture Information and FIFO Operation 293
16.3.3 Change-of-Flow Information 294
16.3.4 Tag vs. Force Breakpoints and Triggers 294
16.3.5 Trigger Modes 295
16.3.6 Hardware Breakpoints 297
16.4 Register Definition 297
16.4.1 BDC Registers and Control Bits 297
16.4.2 System Background Debug Force Reset Register (SBDFR) 299
16.4.3 DBG Registers and Control Bits 300

Appendix A
Electrical Characteristics and Timing Specifications

A.1 Introduction 305
A.2 Parameter Classification 305
A.3 Absolute Maximum Ratings 306
A.4 Thermal Characteristics 307
A.5 ESD Protection and Latch-Up Immunity 308
A.6 DC Characteristics 310
A.7 Supply Current Characteristics 314
A.8 ADC Characteristics 317
A.9 Internal Clock Generation Module Characteristics 320

Section Number	Title	Page

A.9.1 ICG Frequency Specifications 321
A.10 AC Characteristics 323
A.10.1 Control Timing 323
A.10.2 Timer/PWM (TPM) Module Timing 324
A.11 SPI Characteristics 326
A.12 FLASH Specifications 329
A.13 EMC Performance 330
A.13.1 Conducted Transient Susceptibility 330

Appendix B
Ordering Information and Mechanical Drawings

B.1 Ordering Information 333
B.2 Orderable Part Numbering System 333
B.3 Mechanical Drawings 333

Chapter 1
Introduction

1.1 Overview

The MC9S08AC60 Series are members of the low-cost, high-performance HCS08 Family of 8-bit microcontroller units (MCUs). All MCUs in the family use the enhanced HCS08 core and are available with a variety of modules, memory sizes, memory types, and package types. Refer to Table 1-1 for memory sizes and package types.

Table 1-1. Devices in the MC9S08AC60 Series

Device	FLASH	RAM	Package
MC9S08AC60	63,280	2048	64 QFP 64 LQFP 48 QFN 44 LQFP 32 LQFP
MC9S08AC48	49,152		64 QFP 64 LQFP 48 QFN 44 LQFP 32 LQFP
MC9S08AC32	32,768		64 QFP 64 LQFP 48 QFN 44 LQFP 32 LQFP

Table 1-2 summarizes the feature set available in the MC9S08AC60 Series of MCUs.

Table 1-2. MC9S08AC60 Series Peripherals Available per Package Type

	MC9S08AC60/48/32			
Feature	**64-pin**	**48-pin**	**44-pin**	**32-pin**
CRC	yes			
ADC	16-ch	8-ch		6-ch
IIC	yes			
IRQ	yes			
KBI1	8	7	6	4
SCI1	yes			

Table 1-2. MC9S08AC60 Series Peripherals Available per Package Type

	MC9S08AC60/48/32			
Feature	**64-pin**	**48-pin**	**44-pin**	**32-pin**
SCI2	yes			no
SPI1	yes			
TPM1	6-ch	4-ch		2-ch
TPM1CLK[1]	yes	no		
TPM2	2-ch			
TPM2CLK[1]	yes	no		
TPM3	2-ch			
TPMCLK [1]	yes			
I/O pins	54	38	34	22

[1] TPMCLK, TPM1CLK, and TPM2CLK options are configured via software using the TPMCCFG bit; out of reset, TPM1CLK, TPM2CLK, and TPMCLK are available to TPM1, TPM2, and TPM3 respectively. Reference the TPM chapter for a functional description of the TPMxCLK signal.

1.2 MCU Block Diagrams

The block diagram shows the structure of the MC9S08AC60 Series MCU.

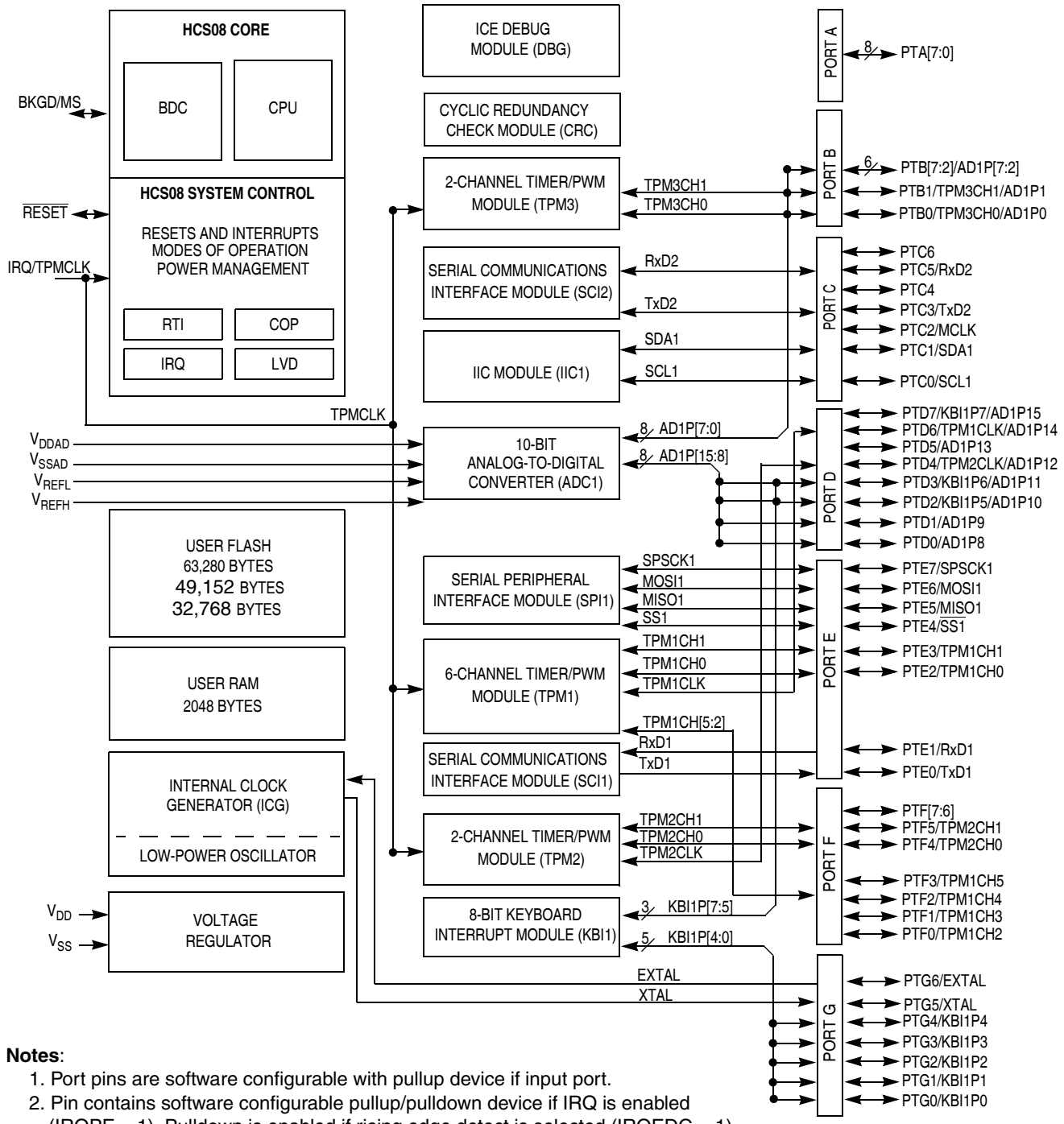

Notes:

1. Port pins are software configurable with pullup device if input port.
2. Pin contains software configurable pullup/pulldown device if IRQ is enabled (IRQPE = 1). Pulldown is enabled if rising edge detect is selected (IRQEDG = 1)
3. Pin contains integrated pullup device.
4. PTD3, PTD2, PTD7, and PTG4 contain both pullup and pulldown devices. Pulldown enabled when KBI is enabled (KBIPEn = 1) and rising edge is selected (KBEDGn = 1).
5. TPMCLK, TPM1CLK, and TPM2CLK options are configured via software; out of reset, TPM1CLK, TPM2CLK, and TPMCLK are available to TPM1, TPM2, and TPM3 respectively.

Figure 1-1. MC9S08AC60 Series Block Diagram

Table 1 lists the functional versions of the on-chip modules.

Table 1. Versions of On-Chip Modules

Module		Version
Cyclic Redundancy Check Generator	(CRC)	1
Analog-to-Digital Converter	(ADC)	1
Internal Clock Generator	(ICG)	4
Inter-Integrated Circuit	(IIC)	2
Keyboard Interrupt	(KBI)	1
Serial Communications Interface	(SCI)	4
Serial Peripheral Interface	(SPI)	3
Timer Pulse-Width Modulator	(TPM)	3
Central Processing Unit	(CPU)	2
Debug Module	(DBG)	2

1.3 System Clock Distribution

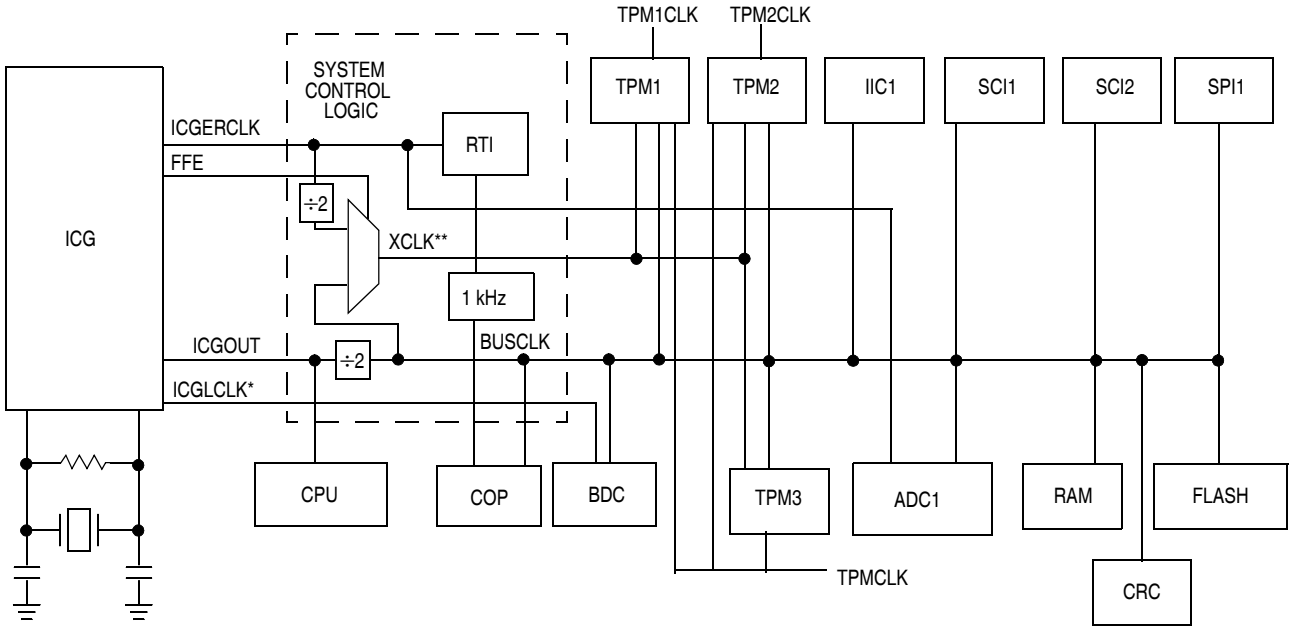

* ICGLCLK is the alternate BDC clock source for the MC9S08AC60 Series.

** Fixed frequency clock.

Figure 1-2. System Clock Distribution Diagram

Some of the modules inside the MCU have clock source choices. Figure 1-2 shows a simplified clock connection diagram. The ICG supplies the clock sources:

- ICGOUT is an output of the ICG module. It is one of the following:
  - The external crystal oscillator

  - An external clock source
  - The output of the digitally-controlled oscillator (DCO) in the frequency-locked loop sub-module
  - Control bits inside the ICG determine which source is connected.
- FFE is a control signal generated inside the ICG. If the frequency of ICGOUT > 4 × the frequency of ICGERCLK, this signal is a logic 1 and the fixed-frequency clock will be ICGERCLK/2. Otherwise the fixed-frequency clock will be BUSCLK.
- ICGLCLK — Development tools can select this internal self-clocked source (~ 8 MHz) to speed up BDC communications in systems where the bus clock is slow.
- ICGERCLK — External reference clock can be selected as the real-time interrupt clock source. Can also be used as the ALTCLK input to the ADC module.

Chapter 2
Pins and Connections

2.1 Introduction

This chapter describes signals that connect to package pins. It includes a pinout diagram, a table of signal properties, and detailed discussion of signals.

2.2 Device Pin Assignment

Figure 2-1. shows the 64-pin package assignments for the MC9S08AC60 Series devices.

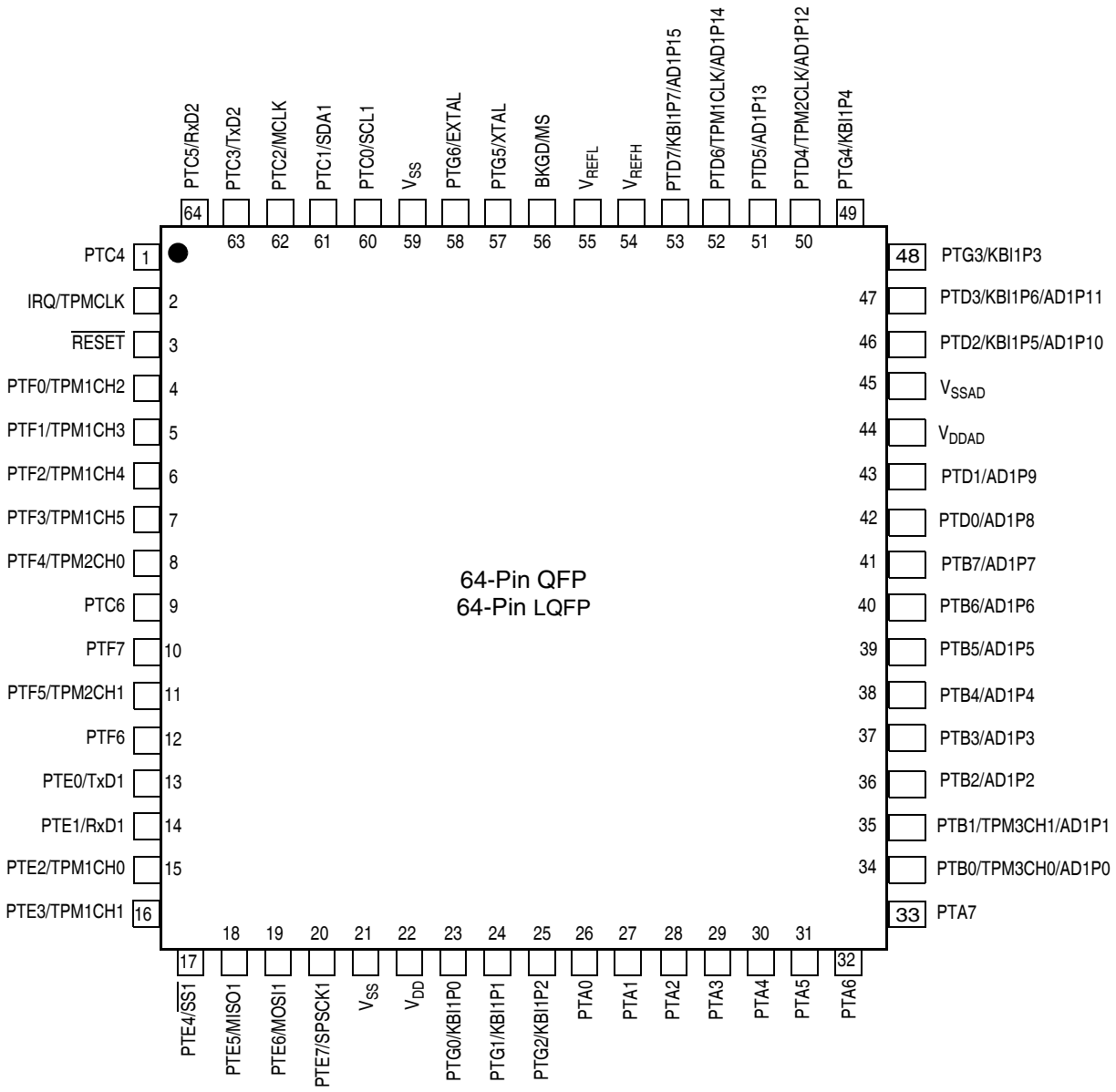

Figure 2-1. MC9S08AC60 Series in 64-Pin QFP or LQFP Package

Figure 2-2 shows the 48-pin QFN pin assignments for the MC9S08AC60 Series device.

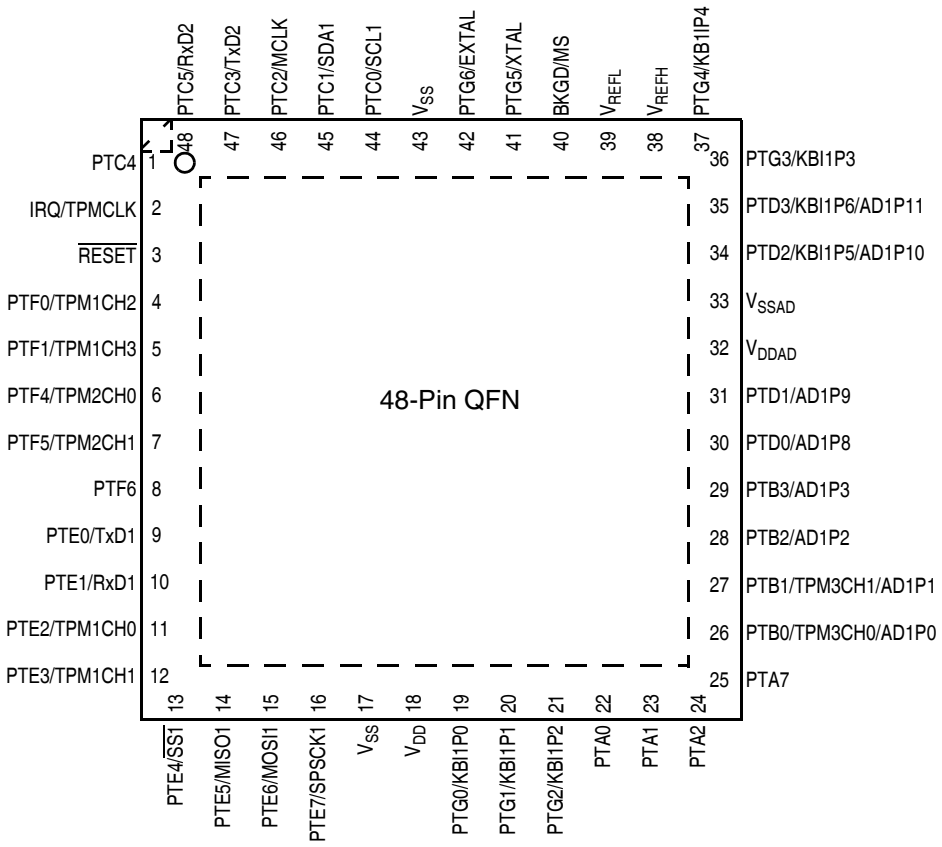

Figure 2-2. MC9S08AC60 Series in 48-Pin QFN Package

Figure 2-3. shows the 44-pin LQFP pin assignments for the MC9S08AC60 Series device.

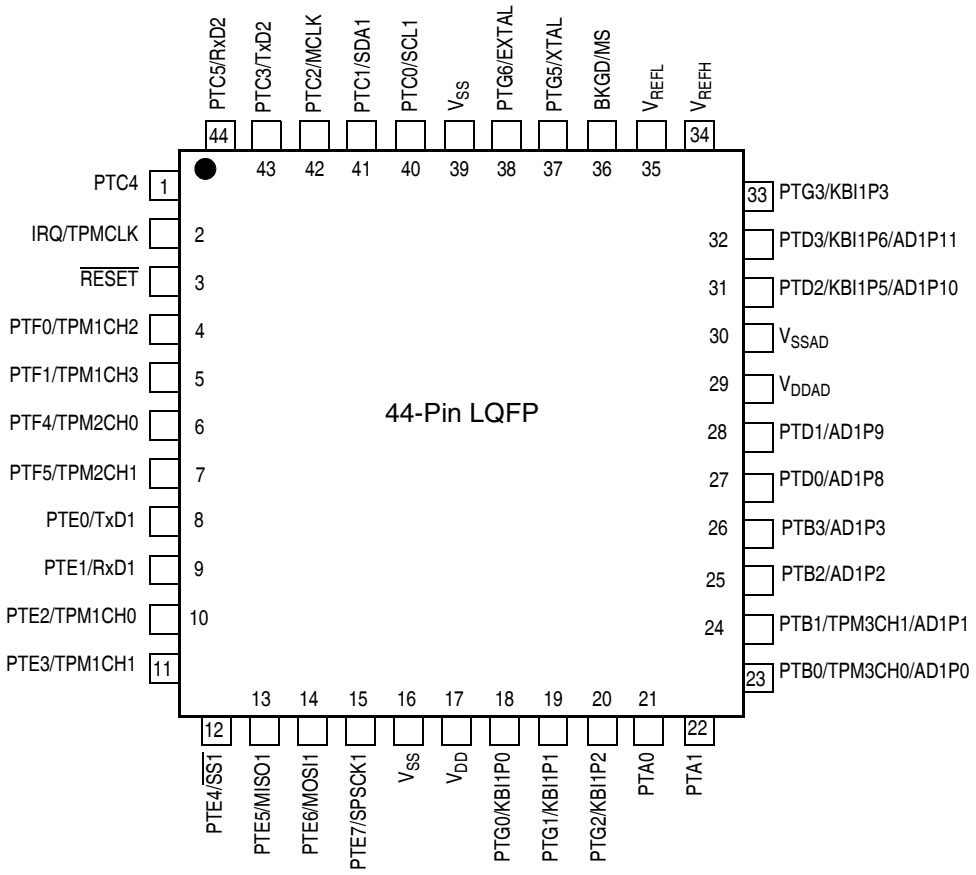

Figure 2-3. MC9S08AC60 Series in 44-Pin LQFP Package

Figure 2-4. shows the 32-pin LQFP pin assignments for the MC9S08AC60 Series device.

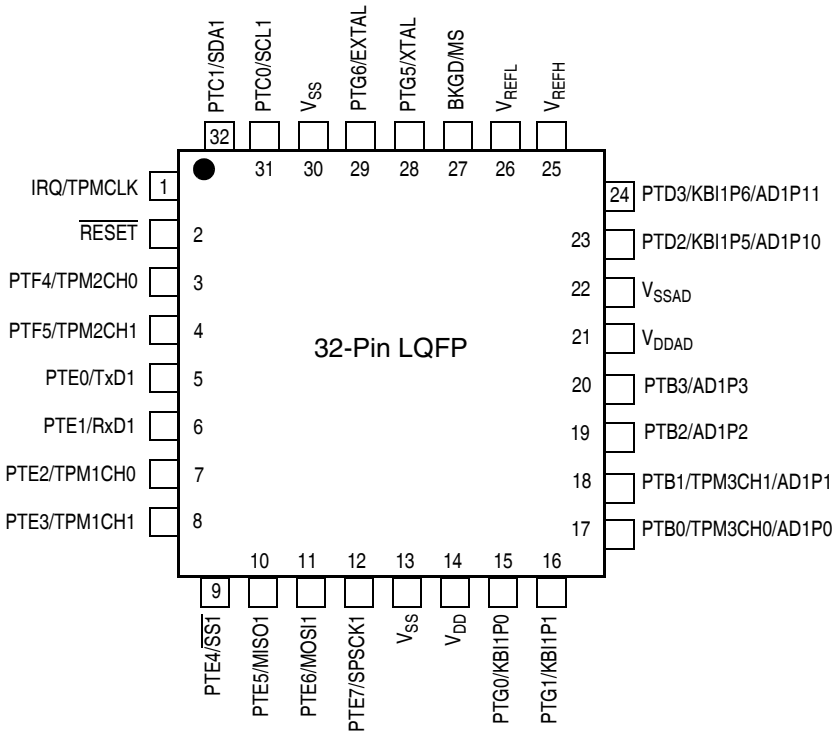

Figure 2-4. MC9S08AC60 Series in 32-Pin LQFP Package

2.3 Recommended System Connections

Figure 2-5 shows pin connections that are common to almost all MC9S08AC60 Series application systems.

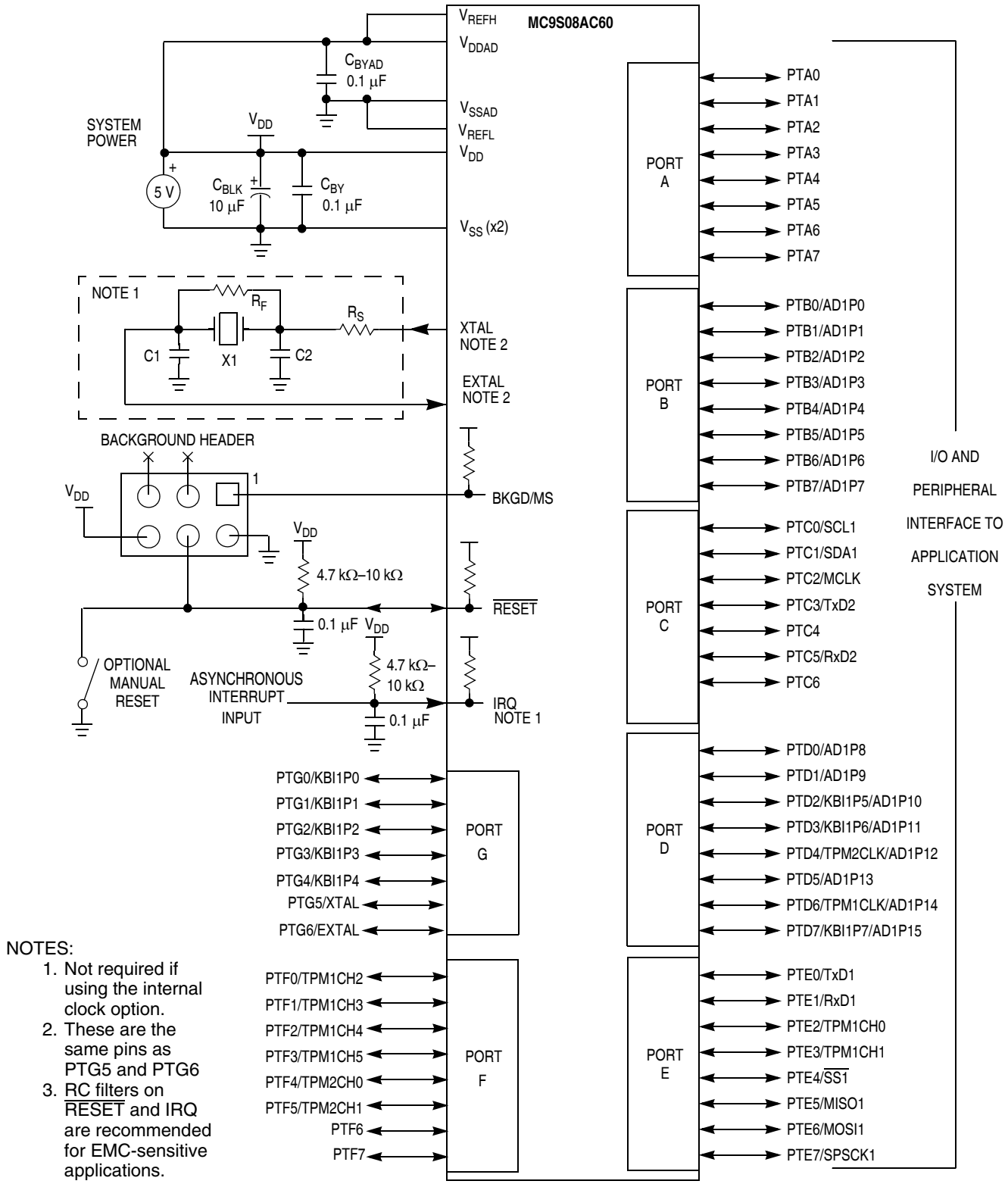

Figure 2-5. Basic System Connections

2.3.1 Power (V_{DD}, V_{SS}, V_{DDAD}, V_{SSAD})

V_{DD} and V_{SS} are the primary power supply pins for the MCU. This voltage source supplies power to all I/O buffer circuitry and to an internal voltage regulator. The internal voltage regulator provides regulated lower-voltage source to the CPU and other internal circuitry of the MCU.

Typically, application systems have two separate capacitors across the power pins. In this case, there should be a bulk electrolytic capacitor, such as a 10-µF tantalum capacitor, to provide bulk charge storage for the overall system and a 0.1-µF ceramic bypass capacitor located as near to the paired V_{DD} and V_{SS} power pins as practical to suppress high-frequency noise. The MC9S08AC60 has a second V_{SS} pin. This pin should be connected to the system ground plane or to the primary V_{SS} pin through a low-impedance connection.

V_{DDAD} and V_{SSAD} are the analog power supply pins for the MCU. This voltage source supplies power to the ADC module. A 0.1-µF ceramic bypass capacitor should be located as near to the analog power pins as practical to suppress high-frequency noise.

2.3.2 Oscillator (XTAL, EXTAL)

Out of reset the MCU uses an internally generated clock (self-clocked mode — f_{Self_reset}) equivalent to about 8-MHz crystal rate. This frequency source is used during reset startup and can be enabled as the clock source for stop recovery to avoid the need for a long crystal startup delay. This MCU also contains a trimmable internal clock generator (ICG) module that can be used to run the MCU. For more information on the ICG, see Chapter 10, “Internal Clock Generator (S08ICGV4).”

The oscillator in this MCU is a Pierce oscillator that can accommodate a crystal or ceramic resonator in either of two frequency ranges selected by the RANGE bit in the ICGC1 register. Rather than a crystal or ceramic resonator, an external oscillator can be connected to the EXTAL input pin.

Refer to Figure 2-5 for the following discussion. R_S (when used) and R_F should be low-inductance resistors such as carbon composition resistors. Wire-wound resistors, and some metal film resistors, have too much inductance. C1 and C2 normally should be high-quality ceramic capacitors that are specifically designed for high-frequency applications.

R_F is used to provide a bias path to keep the EXTAL input in its linear range during crystal startup and its value is not generally critical. Typical systems use 1 MΩ to 10 MΩ. Higher values are sensitive to humidity and lower values reduce gain and (in extreme cases) could prevent startup.

C1 and C2 are typically in the 5-pF to 25-pF range and are chosen to match the requirements of a specific crystal or resonator. Be sure to take into account printed circuit board (PCB) capacitance and MCU pin capacitance when sizing C1 and C2. The crystal manufacturer typically specifies a load capacitance which is the series combination of C1 and C2 which are usually the same size. As a first-order approximation, use 10 pF as an estimate of combined pin and PCB capacitance for each oscillator pin (EXTAL and XTAL).

2.3.3 $\overline{\text{RESET}}$ Pin

$\overline{\text{RESET}}$ is a dedicated pin with a pullup device built in. It has input hysteresis, a high current output driver, and no output slew rate control. Internal power-on reset and low-voltage reset circuitry typically make

external reset circuitry unnecessary. This pin is normally connected to the standard 6-pin background debug connector so a development system can directly reset the MCU system. If desired, a manual external reset can be added by supplying a simple switch to ground (pull reset pin low to force a reset).

Whenever any reset is initiated (whether from an external signal or from an internal system), the reset pin is driven low for approximately 34 cycles of f_{Self_reset}. The reset circuitry decodes the cause of reset and records it by setting a corresponding bit in the system control reset status register (SRS).

In EMC-sensitive applications, an external RC filter is recommended on the reset pin. See Figure 2-5 for an example.

2.3.4 Background/Mode Select (BKGD/MS)

While in reset, the BKGD/MS pin functions as a mode select pin. Immediately after reset rises the pin functions as the background pin and can be used for background debug communication. While functioning as a background/mode select pin, the pin includes an internal pullup device, input hysteresis, and no output slew rate control. When the pin functions as a *background* pin, it includes a high current output driver. When the pin functions as a *mode select* pin it is input only, and therefore does not include a standard output driver.

If nothing is connected to this pin, the MCU will enter normal operating mode at the rising edge of reset. If a debug system is connected to the 6-pin standard background debug header, it can hold BKGD/MS low during the rising edge of reset which forces the MCU to active background mode.

The BKGD pin is used primarily for background debug controller (BDC) communications using a custom protocol that uses 16 clock cycles of the target MCU's BDC clock per bit time. The target MCU's BDC clock could be as fast as the bus clock rate, so there should never be any significant capacitance connected to the BKGD/MS pin that could interfere with background serial communications.

Although the BKGD pin is a pseudo open-drain pin, the background debug communication protocol provides brief, actively driven, high speedup pulses to ensure fast rise times. Small capacitances from cables and the absolute value of the internal pullup device play almost no role in determining rise and fall times on the BKGD pin.

2.3.5 ADC Reference Pins (V_{REFH}, V_{REFL})

The V_{REFH} and V_{REFL} pins are the voltage reference high and voltage reference low inputs respectively for the ADC module.

2.3.6 External Interrupt Pin (IRQ)

The IRQ pin is the input source for the IRQ interrupt and is also the input for the BIH and BIL instructions. If the IRQ function is not enabled, this pin can still be configured as the TPMCLK (see the TPM chapter).

In EMC-sensitive applications, an external RC filter is recommended on the IRQ pin. See Figure 2-5 for an example.

2.3.7 General-Purpose I/O and Peripheral Ports

The remaining pins are shared among general-purpose I/O and on-chip peripheral functions such as timers and serial I/O systems. Immediately after reset, all of these pins are configured as high-impedance general-purpose inputs with internal pullup devices disabled.

NOTE

To avoid extra current drain from floating input pins, the reset initialization routine in the application program should either enable on-chip pullup devices or change the direction of unused pins to outputs so the pins do not float.

Not all general-purpose I/O pins are available on all packages. To avoid extra current drain from floating input pins, the user's reset initialization routine in the application program should either enable on-chip pullup devices or change the direction of unconnected pins to outputs so the pins do not float.

For information about controlling these pins as general-purpose I/O pins, see Chapter 6, "Parallel Input/Output."

When an on-chip peripheral system is controlling a pin, data direction control bits still determine what is read from port data registers even though the peripheral module controls the pin direction by controlling the enable for the pin's output buffer. See the Chapter 6, "Parallel Input/Output" chapter for more details.

Pullup enable bits for each input pin control whether on-chip pullup devices are enabled whenever the pin is acting as an input even if it is being controlled by an on-chip peripheral module. When the PTD7, PTD3, PTD2, and PTG4 pins are controlled by the KBI module and are configured for rising-edge/high-level sensitivity, the pullup enable control bits enable pulldown devices rather than pullup devices. Similarly, when IRQ is configured as the IRQ input and is set to detect rising edges, the pullup enable control bit enables a pulldown device rather than a pullup device.

NOTE

When an alternative function is first enabled it is possible to get a spurious edge to the module, user software should clear out any associated flags before interrupts are enabled. Table 2-1 illustrates the priority if multiple modules are enabled. The highest priority module will have control over the pin. Selecting a higher priority pin function with a lower priority function already enabled can cause spurious edges to the lower priority module. It is recommended that all modules that share a pin be disabled before enabling another module.

Table 2-1. Pin Availability by Package Pin-Count

Pin Number				<-- Lowest	Priority	--> Highest
64	**48**	**44**	**32**	**Port Pin**	**Alt 1**	**Alt 2**
1	1	1	—	PTC4		
2	2	2	1	IRQ	TPMCLK[1]	
3	3	3	2	$\overline{\text{RESET}}$		
4	4	4	—	PTF0	TPM1CH2	
5	5	5	—	PTF1	TPM1CH3	
6	—	—	—	PTF2	TPM1CH4	
7	—	—	—	PTF3	TPM1CH5	
8	6	6	3	PTF4	TPM2CH0	
9	—	—	—	PTC6		
10	—	—	—	PTF7		
11	7	7	4	PTF5	TPM2CH1	
12	8	—	—	PTF6		
13	9	8	5	PTE0	TxD1	
14	10	9	6	PTE1	RxD1	
15	11	10	7	PTE2	TPM1CH0	
16	12	11	8	PTE3	TPM1CH1	
17	13	12	9	PTE4	SS1	
18	14	13	10	PTE5	MISO1	
19	15	14	11	PTE6	MOSI1	
20	16	15	12	PTE7	SPSCK1	
21	17	16	13	V_{SS}		
22	18	17	14	V_{DD}		
23	19	18	15	PTG0	KBI1P0	
24	20	19	16	PTG1	KBI1P1	
25	21	20	—	PTG2	KBI1P2	
26	22	21	—	PTA0		
27	23	22	—	PTA1		
28	24	—	—	PTA2		
29	—	—	—	PTA3		
30	—	—	—	PTA4		
31	—	—	—	PTA5		
32	—	—	—	PTA6		

Pin Number				<-- Lowest	Priority	--> Highest
64	**48**	**44**	**32**	**Port Pin**	**Alt 1**	**Alt 2**
33	25	—	—	PTA7		
34	26	23	17	PTB0	TPM3CH0	AD1P0
35	27	24	18	PTB1	TPM3CH1	AD1P1
36	28	25	19	PTB2	AD1P2	
37	29	26	20	PTB3	AD1P3	
38	—	—	—	PTB4	AD1P4	
39	—	—	—	PTB5	AD1P5	
40	—	—	—	PTB6	AD1P6	
41	—	—	—	PTB7	AD1P7	
42	30	27	—	PTD0	AD1P8	
43	31	28	—	PTD1	AD1P9	
44	32	29	21	V_{DDAD}		
45	33	30	22	V_{SSAD}		
46	34	31	23	PTD2	KBI1P5	AD1P10
47	35	32	24	PTD3	KBI1P6	AD1P11
48	36	33	—	PTG3	KBI1P3	
49	37	—	—	PTG4	KBI1P4	
50	—	—	—	PTD4	TPM2CLK	AD1P12
51	—	—	—	PTD5	AD1P13	
52	—	—	—	PTD6	TPM1CLK	AD1P14
53	—	—	—	PTD7	KBI1P7	AD1P15
54	38	34	25	V_{REFH}		
55	39	35	26	V_{REFL}		
56	40	36	27	BKGD	MS	
57	41	37	28	PTG5	XTAL	
58	42	38	29	PTG6	EXTAL	
59	43	39	30	V_{SS}		
60	44	40	31	PTC0	SCL1	
61	45	41	32	PTC1	SDA1	
62	46	42	—	PTC2	MCLK	
63	47	43	—	PTC3	TxD2	
64	48	44	—	PTC5	RxD2	

1. TPMCLK, TPM1CLK, and TPM2CLK options are configured via software; out of reset, TPM1CLK, TPM2CLK, and TPMCLK are available to TPM1, TPM2, and TPM3 respectively.

Chapter 3
Modes of Operation

3.1 Introduction

The operating modes of the MC9S08AC60 Series are described in this chapter. Entry into each mode, exit from each mode, and functionality while in each of the modes are described.

3.2 Features

- Active background mode for code development
- Wait mode:
  - — CPU shuts down to conserve power
  - — System clocks running
  - — Full voltage regulation maintained
- Stop modes:
  - — System clocks stopped; voltage regulator in standby
  - — Stop2 — Partial power down of internal circuits, RAM contents retained
  - — Stop3 — All internal circuits powered for fast recovery

3.3 Run Mode

This is the normal operating mode for the MC9S08AC60 Series. This mode is selected when the BKGD/MS pin is high at the rising edge of reset. In this mode, the CPU executes code from internal memory with execution beginning at the address fetched from memory at 0xFFFE:0xFFFF after reset.

3.4 Active Background Mode

The active background mode functions are managed through the background debug controller (BDC) in the HCS08 core. The BDC, together with the on-chip ICE debug module (DBG), provide the means for analyzing MCU operation during software development.

Active background mode is entered in any of five ways:

- When the BKGD/MS pin is low at the rising edge of reset
- When a BACKGROUND command is received through the BKGD pin
- When a BGND instruction is executed
- When encountering a BDC breakpoint
- When encountering a DBG breakpoint

After entering active background mode, the CPU is held in a suspended state waiting for serial background commands rather than executing instructions from the user's application program.

Background commands are of two types:

- Non-intrusive commands, defined as commands that can be issued while the user program is running. Non-intrusive commands can be issued through the BKGD pin while the MCU is in run mode; non-intrusive commands can also be executed when the MCU is in the active background mode. Non-intrusive commands include:
  - Memory access commands
  - Memory-access-with-status commands
  - BDC register access commands
  - The BACKGROUND command
- Active background commands, which can only be executed while the MCU is in active background mode. Active background commands include commands to:
  - Read or write CPU registers
  - Trace one user program instruction at a time
  - Leave active background mode to return to the user's application program (GO)

3.5 Wait Mode

Wait mode is entered by executing a WAIT instruction. Upon execution of the WAIT instruction, the CPU enters a low-power state in which it is not clocked. The I bit in CCR is cleared when the CPU enters the wait mode, enabling interrupts. When an interrupt request occurs, the CPU exits the wait mode and resumes processing, beginning with the stacking operations leading to the interrupt service routine.

While the MCU is in wait mode, there are some restrictions on which background debug commands can be used. Only the BACKGROUND command and memory-access-with-status commands are available when the MCU is in wait mode. The memory-access-with-status commands do not allow memory access, but they report an error indicating that the MCU is in either stop or wait mode. The BACKGROUND command can be used to wake the MCU from wait mode and enter active background mode.

3.6 Stop Modes

One of two stop modes is entered upon execution of a STOP instruction when the STOPE bit in the system option register is set. In both stop modes, all internal clocks are halted. If the STOPE bit is not set when the CPU executes a STOP instruction, the MCU will not enter either of the stop modes and an illegal opcode reset is forced. The stop modes are selected by setting the appropriate bits in SPMSC2.

Some HCS08 devices that are designed for low voltage operation (1.8V to 3.6V) also include stop1 mode. The MC9S08AC60 Series of devices operates at 2.7 V to 5.5 V and does not include stop1 mode.

Table 3-1 summarizes the behavior of the MCU in each of the stop modes.

Table 3-1. Stop Mode Behavior

Mode	PPDC	CPU, Digital Peripherals, FLASH	RAM	ICG	ADC	Regulator	I/O Pins	RTI
Stop2	1	Off	Standby	Off	Disabled	Standby	States held	Optionally on
Stop3	0	Standby	Standby	Off[1]	Optionally on	Standby	States held	Optionally on

[1] Crystal oscillator can be configured to run in stop3. Please see the ICG registers.

3.6.1 Stop2 Mode

The stop2 mode provides very low standby power consumption and maintains the contents of RAM and the current state of all of the I/O pins. To enter stop2, the user must execute a STOP instruction with stop2 selected (PPDC = 1) and stop mode enabled (STOPE = 1). In addition, the LVD must not be enabled to operate in stop (LVDSE = LVDE = 1). If the LVD is enabled in stop, then the MCU enters stop3 upon the execution of the STOP instruction regardless of the state of PPDC.

Before entering stop2 mode, the user must save the contents of the I/O port registers, as well as any other memory-mapped registers which they want to restore after exit of stop2, to locations in RAM. Upon exit of stop2, these values can be restored by user software before pin latches are opened.

When the MCU is in stop2 mode, all internal circuits that are powered from the voltage regulator are turned off, except for the RAM. The voltage regulator is in a low-power standby state, as is the ADC. Upon entry into stop2, the states of the I/O pins are latched. The states are held while in stop2 mode and after exiting stop2 mode until a logic 1 is written to PPDACK in SPMSC2.

Exit from stop2 is done by asserting either of the wake-up pins: $\overline{\text{RESET}}$ or IRQ, or by an RTI interrupt. IRQ is always an active low input when the MCU is in stop2, regardless of how it was configured before entering stop2.

Upon wake-up from stop2 mode, the MCU will start up as from a power-on reset (POR) except pin states remain latched. The CPU will take the reset vector. The system and all peripherals will be in their default reset states and must be initialized.

After waking up from stop2, the PPDF bit in SPMSC2 is set. This flag may be used to direct user code to go to a stop2 recovery routine. PPDF remains set and the I/O pin states remain latched until a logic 1 is written to PPDACK in SPMSC2.

To maintain I/O state for pins that were configured as general-purpose I/O, the user must restore the contents of the I/O port registers, which have been saved in RAM, to the port registers before writing to the PPDACK bit. If the port registers are not restored from RAM before writing to PPDACK, then the register bits will assume their reset states when the I/O pin latches are opened and the I/O pins will switch to their reset states.

For pins that were configured as peripheral I/O, the user must reconfigure the peripheral module that interfaces to the pin before writing to the PPDACK bit. If the peripheral module is not enabled before

writing to PPDACK, the pins will be controlled by their associated port control registers when the I/O latches are opened.

A separate self-clocked source (≈1 kHz) for the real-time interrupt allows a wakeup from stop2 or stop3 mode with no external components. When RTIS2:RTIS1:RTIS0 = 0:0:0, the real-time interrupt function and this 1-kHz source are disabled. Power consumption is lower when the 1-kHz source is disabled, but in that case the real-time interrupt cannot wake the MCU from stop.

3.6.2 Stop3 Mode

To enter stop3, the user must execute a STOP instruction with stop3 selected (PPDC = 0) and stop mode enabled (STOPE = 1). Upon entering the stop3 mode, all of the clocks in the MCU, including the oscillator itself, are halted. The ICG enters its standby state, as does the voltage regulator and the ADC. The states of all of the internal registers and logic, as well as the RAM content, are maintained. The I/O pin states are not latched at the pin as in stop2. Instead they are maintained by virtue of the states of the internal logic driving the pins being maintained.

Exit from stop3 is done by asserting $\overline{\text{RESET}}$, an asynchronous interrupt pin, or through the real-time interrupt (RTI). The asynchronous interrupt pins are the IRQ or KBI pins. Exit from stop3 can also facilitated by the SCI reciever interrupt, the ADC, and LVI.

If stop3 is exited by means of the $\overline{\text{RESET}}$ pin, then the MCU will be reset and operation will resume after taking the reset vector. Exit by means of an asynchronous interrupt or the real-time interrupt will result in the MCU taking the appropriate interrupt vector.

A separate self-clocked source (≈1 kHz) for the real-time interrupt allows a wakeup from stop2 or stop3 mode with no external components. When RTIS2:RTIS1:RTIS0 = 0:0:0, the real-time interrupt function and this 1-kHz source are disabled. Power consumption is lower when the 1-kHz source is disabled, but in that case the real-time interrupt cannot wake the MCU from stop.

3.6.3 Active BDM Enabled in Stop Mode

Entry into the active background mode from run mode is enabled if the ENBDM bit in BDCSCR is set. This register is described in Chapter 16, “Development Support” of this data sheet. If ENBDM is set when the CPU executes a STOP instruction, the system clocks to the background debug logic remain active when the MCU enters stop mode so background debug communication is still possible. In addition, the voltage regulator does not enter its low-power standby state but maintains full internal regulation. If the user attempts to enter stop2 with ENBDM set, the MCU will instead enter stop3.

Most background commands are not available in stop mode. The memory-access-with-status commands do not allow memory access, but they report an error indicating that the MCU is in either stop or wait mode. The BACKGROUND command can be used to wake the MCU from stop and enter active background mode if the ENBDM bit is set. After entering background debug mode, all background commands are available. Table 3-2 summarizes the behavior of the MCU in stop when entry into the background debug mode is enabled.

Table 3-2. BDM Enabled Stop Mode Behavior

Mode	PPDC	CPU, Digital Peripherals, FLASH	RAM	ICG	ADC	Regulator	I/O Pins	RTI
Stop3	x	Standby	Standby	Active	Optionally on	Active	States held	Optionally on

3.6.4 LVD Enabled in Stop Mode

The LVD system is capable of generating either an interrupt or a reset when the supply voltage drops below the LVD voltage. If the LVD is enabled in stop by setting the LVDE and the LVDSE bits, then the voltage regulator remains active during stop mode. If the user attempts to enter stop2 with the LVD enabled for stop, the MCU will instead enter stop3. Table 3-3 summarizes the behavior of the MCU in stop when the LVD is enabled.

Table 3-3. LVD Enabled Stop Mode Behavior

Mode	PPDC	CPU, Digital Peripherals, FLASH	RAM	ICG	ADC	Regulator	I/O Pins	RTI
Stop3	x	Standby	Standby	Off	Optionally on	Active	States held	Optionally on

3.6.5 On-Chip Peripheral Modules in Stop Modes

When the MCU enters any stop mode, system clocks to the internal peripheral modules are stopped. Even in the exception case (ENBDM = 1), where clocks to the background debug logic continue to operate, clocks to the peripheral systems are halted to reduce power consumption. Refer to Section 3.6.1, “Stop2 Mode,” and Section 3.6.2, “Stop3 Mode,” for specific information on system behavior in stop modes.

Table 3-4. Stop Mode Behavior

Peripheral	Mode	
	Stop2	Stop3
CPU	Off	Standby
RAM	Standby	Standby
FLASH	Off	Standby
Parallel Port Registers	Off	Standby
ADC	Off	Optionally On[1]
ICG	Off	Optionally On[2]
IIC	Off	Standby
RTI	Optionally on[3]	Optionally on[3]
SCI	Off	Standby
SPI	Off	Standby
TPM	Off	Standby

Table 3-4. Stop Mode Behavior (continued)

Peripheral	Mode	
	Stop2	Stop3
System Voltage Regulator	Standby	Standby
I/O Pins	States Held	States Held

[1] Requires the asynchronous ADC clock and LVD to be enabled, else in standby.
[2] OSCSTEN set in ICGC1, else in standby.
[3] RTIS[2:0] in SRTISC does not equal 0 before entering stop, else off.

Chapter 4
Memory

4.1 MC9S08AC60 Series Memory Map

As shown in Figure 4-1, on-chip memory in the MC9S08AC60 Series series of MCUs consists of RAM, FLASH program memory for nonvolatile data storage, plus I/O and control/status registers. The registers are divided into three groups:

- Direct-page registers ($0000 through $006F)
- High-page registers ($1800 through $185F)
- Nonvolatile registers ($FFB0 through $FFBF)

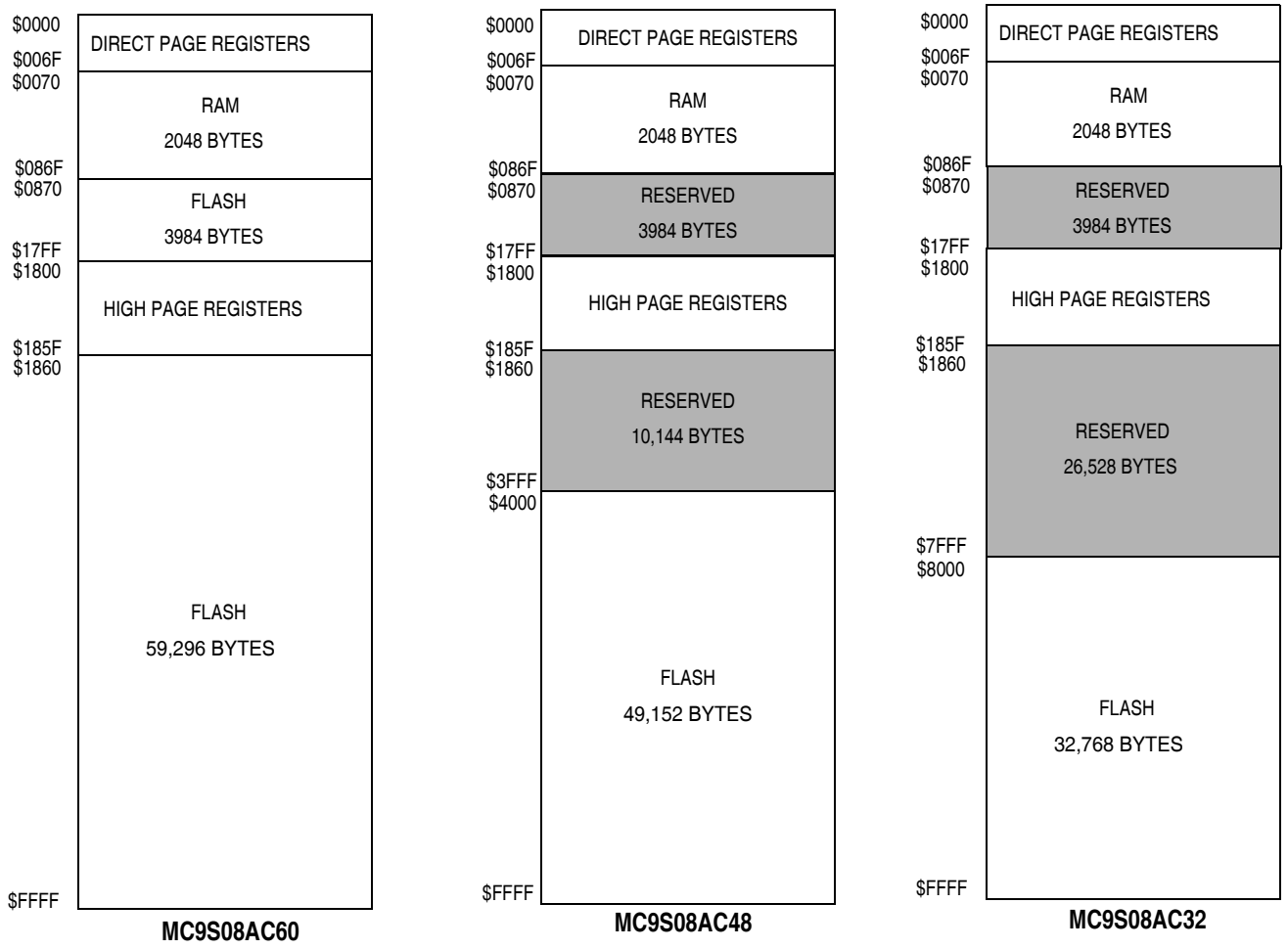

Figure 4-1. MC9S08AC60 Series **Memory Map**

4.1.1 Reset and Interrupt Vector Assignments

Figure 4-1 shows address assignments for reset and interrupt vectors. The vector names shown in this table are the labels used in the Freescale-provided equate file for the MC9S08AC60 Series. For more details about resets, interrupts, interrupt priority, and local interrupt mask controls, refer to Chapter 5, "Resets, Interrupts, and System Configuration."

Table 4-1. Reset and Interrupt Vectors

Address (High/Low)	Vector	Vector Name
0xFFC0:FFC1 through 0xFFC4:FFC5	Unused Vector Space (available for user program)	—
0xFFC6:FFC7	TPM3 overflow	Vtpm3ovf
0xFFC8:FFC9	TPM3 channel 1	Vtpm3ch1
0xFFCA:FFCB	TPM3 channel 0	Vtpm3ch0
0xFFCC:FFCD	RTI	Vrti
0xFFCE:FFCF	IIC1	Viic1
0xFFD0:FFD1	ADC1 conversion	Vadc1
0xFFD2:FFD3	KBI1	Vkeyboard1
0xFFD4:FFD5	SCI2 transmit	Vsci2tx
0xFFD6:FFD7	SCI2 receive	Vsci2rx
0xFFD8:FFD9	SCI2 error	Vsci2err
0xFFDA:FFDB	SCI1 transmit	Vsci1tx
0xFFDC:FFDD	SCI1 receive	Vsci1rx
0xFFDE:FFDF	SCI1 error	Vsci1err
0xFFE0:FFE1	SPI1	Vspi1
0xFFE2:FFE3	TPM2 overflow	Vtpm2ovf
0xFFE4:FFE5	TPM2 channel 1	Vtpm2ch1
0xFFE6:FFE7	TPM2 channel 0	Vtpm2ch0
0xFFE8:FFE9	TPM1 overflow	Vtpm1ovf
0xFFEA:FFEB	TPM1 channel 5	Vtpm1ch5
0xFFEC:FFED	TPM1 channel 4	Vtpm1ch4
0xFFEE:FFEF	TPM1 channel 3	Vtpm1ch3
0xFFF0:FFF1	TPM1 channel 2	Vtpm1ch2
0xFFF2:FFF3	TPM1 channel 1	Vtpm1ch1
0xFFF4:FFF5	TPM1 channel 0	Vtpm1ch0
0xFFF6:FFF7	ICG	Vicg
0xFFF8:FFF9	Low voltage detect	Vlvd
0xFFFA:FFFB	IRQ	Virq
0xFFFC:FFFD	SWI	Vswi
0xFFFE:FFFF	Reset	Vreset

4.2 Register Addresses and Bit Assignments

The registers in the MC9S08AC60 Series are divided into these three groups:

- Direct-page registers are located in the first 112 locations in the memory map, so they are accessible with efficient direct addressing mode instructions.
- High-page registers are used much less often, so they are located above 0x1800 in the memory map. This leaves more room in the direct page for more frequently used registers and variables.
- The nonvolatile register area consists of a block of 16 locations in FLASH memory at $FFB0–$FFBF.

  Nonvolatile register locations include:

  — Three values which are loaded into working registers at reset

  — An 8-byte backdoor comparison key which optionally allows a user to gain controlled access to secure memory

  Because the nonvolatile register locations are FLASH memory, they must be erased and programmed like other FLASH memory locations.

Direct-page registers can be accessed with efficient direct addressing mode instructions. Bit manipulation instructions can be used to access any bit in any direct-page register. Table 4-2 is a summary of all user-accessible direct-page registers and control bits.

The direct page registers in Table 4-2 can use the more efficient direct addressing mode which only requires the lower byte of the address. Because of this, the lower byte of the address in column one is shown in bold text. In Table 4-3 and Table 4-4 the whole address in column one is shown in bold. In Table 4-2, Table 4-3, and Table 4-4, the register names in column two are shown in bold to set them apart from the bit names to the right. Cells that are not associated with named bits are shaded. A shaded cell with a 0 indicates this unused bit always reads as a 0. Shaded cells with dashes indicate unused or reserved bit locations that could read as 1s or 0s.

Table 4-2. Direct-Page Register Summary (Sheet 1 of 3)

Address	Register Name	Bit 7	6	5	4	3	2	1	Bit 0
0x0000	**PTAD**	PTAD7	PTAD6	PTAD5	PTAD4	PTAD3	PTAD2	PTAD1	PTAD0
0x0001	**PTADD**	PTADD7	PTADD6	PTADD5	PTADD4	PTADD3	PTADD2	PTADD1	PTADD0
0x0002	**PTBD**	PTBD7	PTBD6	PTBD5	PTBD4	PTBD3	PTBD2	PTBD1	PTBD0
0x0003	**PTBDD**	PTBDD7	PTBDD6	PTBDD5	PTBDD4	PTBDD3	PTBDD2	PTBDD1	PTBDD0
0x0004	**PTCD**	0	PTCD6	PTCD5	PTCD4	PTCD3	PTCD2	PTCD1	PTCD0
0x0005	**PTCDD**	0	PTCDD6	PTCDD5	PTCDD4	PTCDD3	PTCDD2	PTCDD1	PTCDD0
0x0006	**PTDD**	PTDD7	PTDD6	PTDD5	PTDD4	PTDD3	PTDD2	PTDD1	PTDD0
0x0007	**PTDDD**	PTDDD7	PTDDD6	PTDDD5	PTDDD4	PTDDD3	PTDDD2	PTDDD1	PTDDD0
0x0008	**PTED**	PTED7	PTED6	PTED5	PTED4	PTED3	PTED2	PTED1	PTED0
0x0009	**PTEDD**	PTEDD7	PTEDD6	PTEDD5	PTEDD4	PTEDD3	PTEDD2	PTEDD1	PTEDD0
0x000A	**PTFD**	PTFD7	PTFD6	PTFD5	PTFD4	PTFD3	PTFD2	PTFD1	PTFD0
0x000B	**PTFDD**	PTFDD7	PTFDD6	PTFDD5	PTFDD4	PTFDD3	PTFDD2	PTFDD1	PTFDD0
0x000C	**PTGD**	0	PTGD6	PTGD5	PTGD4	PTGD3	PTGD2	PTGD1	PTGD0
0x000D	**PTGDD**	0	PTGDD6	PTGDD5	PTGDD4	PTGDD3	PTGDD2	PTGDD1	PTGDD0
0x000E– 0x000F	Reserved	— —	— —	— —	— —	— —	— —	— —	— —
0x0010	**ADC1SC1**	COCO	AIEN	ADCO	ADCH				
0x0011	**ADC1SC2**	ADACT	ADTRG	ACFE	ACFGT	0	0	R	R
0x0012	**ADC1RH**	0	0	0	0	0	0	ADR9	ADR8
0x0013	**ADC1RL**	ADR7	ADR6	ADR5	ADR4	ADR3	ADR2	ADR1	ADR0
0x0014	**ADC1CVH**	0	0	0	0	0	0	ADCV9	ADCV8
0x0015	**ADC1CVL**	ADCV7	ADCV6	ADCV5	ADCV4	ADCV3	ADCV2	ADCV1	ADCV0
0x0016	**ADC1CFG**	ADLPC	ADIV		ADLSMP	MODE		ADICLK	
0x0017	**APCTL1**	ADPC7	ADPC6	ADPC5	ADPC4	ADPC3	ADPC2	ADPC1	ADPC0
0x0018	**APCTL2**	ADPC15	ADPC14	ADPC13	ADPC12	ADPC11	ADPC10	ADPC9	ADPC8
0x0019– 0x001B	Reserved	— —	— —	— —	— —	— —	— —	— —	— —
0x001C	**IRQSC**	0	IRQPDD	IRQEDG	IRQPE	IRQF	IRQACK	IRQIE	IRQMOD
0x001D	Reserved	—	—	—	—	—	—	—	—
0x001E	**KBISC**	KBEDG7	KBEDG6	KBEDG5	KBEDG4	KBF	KBACK	KBIE	KBIMOD
0x001F	**KBIPE**	KBIPE7	KBIPE6	KBIPE5	KBIPE4	KBIPE3	KBIPE2	KBIPE1	KBIPE0
0x0020	**TPM1SC**	TOF	TOIE	CPWMS	CLKSB	CLKSA	PS2	PS1	PS0
0x0021	**TPM1CNTH**	Bit 15	14	13	12	11	10	9	Bit 8
0x0022	**TPM1CNTL**	Bit 7	6	5	4	3	2	1	Bit 0
0x0023	**TPM1MODH**	Bit 15	14	13	12	11	10	9	Bit 8
0x0024	**TPM1MODL**	Bit 7	6	5	4	3	2	1	Bit 0
0x0025	**TPM1C0SC**	CH0F	CH0IE	MS0B	MS0A	ELS0B	ELS0A	0	0
0x0026	**TPM1C0VH**	Bit 15	14	13	12	11	10	9	Bit 8
0x0027	**TPM1C0VL**	Bit 7	6	5	4	3	2	1	Bit 0
0x0028	**TPM1C1SC**	CH1F	CH1IE	MS1B	MS1A	ELS1B	ELS1A	0	0

Table 4-2. Direct-Page Register Summary (Sheet 2 of 3)

Address	Register Name	Bit 7	6	5	4	3	2	1	Bit 0
0x0029	TPM1C1VH	Bit 15	14	13	12	11	10	9	Bit 8
0x002A	TPM1C1VL	Bit 7	6	5	4	3	2	1	Bit 0
0x002B	TPM1C2SC	CH2F	CH2IE	MS2B	MS2A	ELS2B	ELS2A	0	0
0x002C	TPM1C2VH	Bit 15	14	13	12	11	10	9	Bit 8
0x002D	TPM1C2VL	Bit 7	6	5	4	3	2	1	Bit 0
0x002E	TPM1C3SC	CH3F	CH3IE	MS3B	MS3A	ELS3B	ELS3A	0	0
0x002F	TPM1C3VH	Bit 15	14	13	12	11	10	9	Bit 8
0x0030	TPM1C3VL	Bit 7	6	5	4	3	2	1	Bit 0
0x0031	TPM1C4SC	CH4F	CH4IE	MS4B	MS4A	ELS4B	ELS4A	0	0
0x0032	TPM1C4VH	Bit 15	14	13	12	11	10	9	Bit 8
0x0033	TPM1C4VL	Bit 7	6	5	4	3	2	1	Bit 0
0x0034	TPM1C5SC	CH3F	CH5IE	MS5B	MS5A	ELS5B	ELS5A	0	0
0x0035	TPM1C5VH	Bit 15	14	13	12	11	10	9	Bit 8
0x0036	TPM1C5VL	Bit 7	6	5	4	3	2	1	Bit 0
0x0037	Reserved	—	—	—	—	—	—	—	—
0x0038	SCI1BDH	LBKDIE	RXEDGIE	0	SBR12	SBR11	SBR10	SBR9	SBR8
0x0039	SCI1BDL	SBR7	SBR6	SBR5	SBR4	SBR3	SBR2	SBR1	SBR0
0x003A	SCI1C1	LOOPS	SCISWAI	RSRC	M	WAKE	ILT	PE	PT
0x003B	SCI1C2	TIE	TCIE	RIE	ILIE	TE	RE	RWU	SBK
0x003C	SCI1S1	TDRE	TC	RDRF	IDLE	OR	NF	FE	PF
0x003D	SCI1S2	LBKDIF	RXEDGIF	0	RXINV	RWUID	BRK13	LBKDE	RAF
0x003E	SCI1C3	R8	T8	TXDIR	TXINV	ORIE	NEIE	FEIE	PEIE
0x003F	SCI1D	Bit 7	6	5	4	3	2	1	Bit 0
0x0040	SCI2BDH	LBKDIE	RXEDGIE	0	SBR12	SBR11	SBR10	SBR9	SBR8
0x0041	SCI2BDL	SBR7	SBR6	SBR5	SBR4	SBR3	SBR2	SBR1	SBR0
0x0042	SCI2C1	LOOPS	SCISWAI	RSRC	M	WAKE	ILT	PE	PT
0x0043	SCI2C2	TIE	TCIE	RIE	ILIE	TE	RE	RWU	SBK
0x0044	SCI2S1	TDRE	TC	RDRF	IDLE	OR	NF	FE	PF
0x0045	SCI2S2	LBKDIF	RXEDGIF	0	RXINV	RWUID	BRK13	LBKDE	RAF
0x0046	SCI2C3	R8	T8	TXDIR	TXINV	ORIE	NEIE	FEIE	PEIE
0x0047	SCI2D	Bit 7	6	5	4	3	2	1	Bit 0
0x0048	ICGC1	HGO	RANGE	REFS	CLKS		OSCSTEN	LOCD	0
0x0049	ICGC2	LOLRE	MFD			LOCRE	RFD		
0x004A	ICGS1	CLKST		REFST	LOLS	LOCK	LOCS	ERCS	ICGIF
0x004B	ICGS2	0	0	0	0	0	0	0	DCOS
0x004C	ICGFLTU	0	0	0	0	FLT			
0x004D	ICGFLTL	FLT							
0x004E	ICGTRM	TRIM							
0x004F	Reserved	—	—	—	—	—	—	—	—
0x0050	SPI1C1	SPIE	SPE	SPTIE	MSTR	CPOL	CPHA	SSOE	LSBFE

Table 4-2. Direct-Page Register Summary (Sheet 3 of 3)

Address	Register Name	Bit 7	6	5	4	3	2	1	Bit 0
0x0051	**SPI1C2**	0	0	0	MODFEN	BIDIROE	0	SPISWAI	SPC0
0x0052	**SPI1BR**	0	SPPR2	SPPR1	SPPR0	0	SPR2	SPR1	SPR0
0x0053	**SPI1S**	SPRF	0	SPTEF	MODF	0	0	0	0
0x0054	Reserved	0	0	0	0	0	0	0	0
0x0055	**SPI1D**	Bit 7	6	5	4	3	2	1	Bit 0
0x0056	**CRCH**	Bit 15	14	13	12	11	10	9	Bit 8
0x0057	**CRCL**	Bit 7	6	5	4	3	2	1	Bit 0
0x0058	**IIC1A**	ADDR							0
0x0059	**IIC1F**	MULT		ICR					
0x005A	**IIC1C1**	IICEN	IICIE	MST	TX	TXAK	RSTA	0	0
0x005B	**IIC1S**	TCF	IAAS	BUSY	ARBL	0	SRW	IICIF	RXAK
0x005C	**IIC1D**	DATA							
0x005D	**IIC1C2**	GCAEN	ADEXT	0	0	0	AD10	AD9	AD8
0x005E– 0x005F	Reserved	— —	— —	— —	— —	— —	— —	— —	— —
0x0060	**TPM2SC**	TOF	TOIE	CPWMS	CLKSB	CLKSA	PS2	PS1	PS0
0x0061	**TPM2CNTH**	Bit 15	14	13	12	11	10	9	Bit 8
0x0062	**TPM2CNTL**	Bit 7	6	5	4	3	2	1	Bit 0
0x0063	**TPM2MODH**	Bit 15	14	13	12	11	10	9	Bit 8
0x0064	**TPM2MODL**	Bit 7	6	5	4	3	2	1	Bit 0
0x0065	**TPM2C0SC**	CH0F	CH0IE	MS0B	MS0A	ELS0B	ELS0A	0	0
0x0066	**TPM2C0VH**	Bit 15	14	13	12	11	10	9	Bit 8
0x0067	**TPM2C0VL**	Bit 7	6	5	4	3	2	1	Bit 0
0x0068	**TPM2C1SC**	CH1F	CH1IE	MS1B	MS1A	ELS1B	ELS1A	0	0
0x0069	**TPM2C1VH**	Bit 15	14	13	12	11	10	9	Bit 8
0x006A	**TPM2C1VL**	Bit 7	6	5	4	3	2	1	Bit 0
0x006B– 0x006F	Reserved	— —	— —	— —	— —	— —	— —	— —	— —

High-page registers, shown in Table 4-3, are accessed much less often than other I/O and control registers so they have been located outside the direct addressable memory space, starting at 0x1800.

Table 4-3. High-Page Register Summary (Sheet 1 of 3)

Address	Register Name	Bit 7	6	5	4	3	2	1	Bit 0
0x1800	**SRS**	POR	PIN	COP	ILOP	0	ICG	LVD	0
0x1801	**SBDFR**	0	0	0	0	0	0	0	BDFR
0x1802	**SOPT**	COPE	COPT	STOPE	—	0	0	—	—
0x1803	**SMCLK**	0	0	0	MPE	0	MCSEL		
0x1804 – 0x1805	Reserved	— —	— —	— —	— —	— —	— —	— —	— —
0x1806	**SDIDH**	REV3	REV2	REV1	REV0	ID11	ID10	ID9	ID8

Table 4-3. High-Page Register Summary (Sheet 2 of 3)

Address	Register Name	Bit 7	6	5	4	3	2	1	Bit 0
0x1807	SDIDL	ID7	ID6	ID5	ID4	ID3	ID2	ID1	ID0
0x1808	SRTISC	RTIF	RTIACK	RTICLKS	RTIE	0	RTIS2	RTIS1	RTIS0
0x1809	SPMSC1	LVDF	LVDACK	LVDIE	LVDRE	LVDSE	LVDE	0[1]	BGBE
0x180A	SPMSC2	LVWF	LVWACK	LVDV	LVWV	PPDF	PPDACK	—	PPDC
0x180B	Reserved	—	—	—	—	—	—	—	—
0x180C	SOPT2	COPCLKS	—	—	—	TPMCCFG	—	—	—
0x180D– 0x180F	Reserved	— —	— —	— —	— —	— —	— —	— —	— —
0x1810	DBGCAH	Bit 15	14	13	12	11	10	9	Bit 8
0x1811	DBGCAL	Bit 7	6	5	4	3	2	1	Bit 0
0x1812	DBGCBH	Bit 15	14	13	12	11	10	9	Bit 8
0x1813	DBGCBL	Bit 7	6	5	4	3	2	1	Bit 0
0x1814	DBGFH	Bit 15	14	13	12	11	10	9	Bit 8
0x1815	DBGFL	Bit 7	6	5	4	3	2	1	Bit 0
0x1816	DBGC	DBGEN	ARM	TAG	BRKEN	RWA	RWAEN	RWB	RWBEN
0x1817	DBGT	TRGSEL	BEGIN	0	0	TRG3	TRG2	TRG1	TRG0
0x1818	DBGS	AF	BF	ARMF	0	CNT3	CNT2	CNT1	CNT0
0x1819– 0x181F	Reserved	— —	— —	— —	— —	— —	— —	— —	— —
0x1820	FCDIV	DIVLD	PRDIV8	DIV5	DIV4	DIV3	DIV2	DIV1	DIV0
0x1821	FOPT	KEYEN	FNORED	0	0	0	0	SEC01	SEC00
0x1822	Reserved	—	—	—	—	—	—	—	—
0x1823	FCNFG	0	0	KEYACC	0	0	0	0	0
0x1824	FPROT	FPS7	FPS6	FPS5	FPS4	FPS3	FPS2	FPS1	FPDIS
0x1825	FSTAT	FCBEF	FCCF	FPVIOL	FACCERR	0	FBLANK	0	0
0x1826	FCMD	FCMD7	FCMD6	FCMD5	FCMD4	FCMD3	FCMD2	FCMD1	FCMD0
0x1827– 0x182F	Reserved	— —	— —	— —	— —	— —	— —	— —	— —
0x1830	TPM3SC	TOF	TOIE	CPWMS	CLKSB	CLKSA	PS2	PS1	PS0
0x1831	TPM3CNTH	Bit 15	14	13	12	11	10	9	Bit 8
0x1832	TPM3CNTL	Bit 7	6	5	4	3	2	1	Bit 0
0x1833	TPM3MODH	Bit 15	14	13	12	11	10	9	Bit 8
0x1834	TPM3MODL	Bit 7	6	5	4	3	2	1	Bit 0
0x1835	TPM3C0SC	CH0F	CH0IE	MS0B	MS0A	ELS0B	ELS0A	0	0
0x1836	TPM3C0VH	Bit 15	14	13	12	11	10	9	Bit 8
0x1837	TPM3C0VL	Bit 7	6	5	4	3	2	1	Bit 0
0x1838	TPM3C1SC	CH1F	CH1IE	MS1B	MS1A	ELS1B	ELS1A	0	0
0x1839	TPM3C1VH	Bit 15	14	13	12	11	10	9	Bit 8
0x183A	TPM3C1VL	Bit 7	6	5	4	3	2	1	Bit 0

Table 4-3. High-Page Register Summary (Sheet 3 of 3)

Address	Register Name	Bit 7	6	5	4	3	2	1	Bit 0
0x183B 0x183F	Reserved	— —	— —	— —	— —	— —	— —	— —	— —
0x1840	**PTAPE**	PTAPE7	PTAPE6	PTAPE5	PTAPE4	PTAPE3	PTAPE2	PTAPE1	PTAPE0
0x1841	**PTASE**	PTASE7	PTASE6	PTASE5	PTASE4	PTASE3	PTASE2	PTASE1	PTASE0
0x1842	**PTADS**	PTADS7	PTADS6	PTADS5	PTADS4	PTADS3	PTADS2	PTADS1	PTADS0
0x1843	Reserved	—	—	—	—	—	—	—	—
0x1844	**PTBPE**	PTBPE7	PTBPE6	PTBPE5	PTBPE4	PTBPE3	PTBPE2	PTBPE1	PTBPE0
0x1845	**PTBSE**	PTBSE7	PTBSE6	PTBSE5	PTBSE4	PTBSE3	PTBSE2	PTBSE1	PTBSE0
0x1846	**PTBDS**	PTBDS7	PTBDS6	PTBDS5	PTBDS4	PTBDS3	PTBDS2	PTBDS1	PTBDS0
0x1847	Reserved	—	—	—	—	—	—	—	—
0x1848	**PTCPE**	0	PTCPE6	PTCPE5	PTCPE4	PTCPE3	PTCPE2	PTCPE1	PTCPE0
0x1849	**PTCSE**	0	PTCSE6	PTCSE5	PTCSE4	PTCSE3	PTCSE2	PTCSE1	PTCSE0
0x184A	**PTCDS**	0	PTCDS6	PTCDS5	PTCDS4	PTCDS3	PTCDS2	PTCDS1	PTCDS0
0x184B	Reserved	—	—	—	—	—	—	—	—
0x184C	**PTDPE**	PTDPE7	PTDPE6	PTDPE5	PTDPE4	PTDPE3	PTDPE2	PTDPE1	PTDPE0
0x184D	**PTDSE**	PTDSE7	PTDSE6	PTDSE5	PTDSE4	PTDSE3	PTDSE2	PTDSE1	PTDSE0
0x184E	**PTDDS**	PTDDS7	PTDDS6	PTDDS5	PTDDS4	PTDDS3	PTDDS2	PTDDS1	PTDDS0
0x184F	Reserved	—	—	—	—	—	—	—	—
0x1850	**PTEPE**	PTEPE7	PTEPE6	PTEPE5	PTEPE4	PTEPE3	PTEPE2	PTEPE1	PTEPE0
0x1851	**PTESE**	PTESE7	PTESE6	PTESE5	PTESE4	PTESE3	PTESE2	PTESE1	PTESE0
0x1852	**PTEDS**	PTEDS7	PTEDS6	PTEDS5	PTEDS4	PTEDS3	PTEDS2	PTEDS1	PTEDS0
0x1853	Reserved	—	—	—	—	—	—	—	—
0x1854	**PTFPE**	PTFPE7	PTFPE6	PTFPE5	PTFPE4	PTFPE3	PTFPE2	PTFPE1	PTFPE0
0x1855	**PTFSE**	PTFSE7	PTFSE6	PTFSE5	PTFSE4	PTFSE3	PTFSE2	PTFSE1	PTFSE0
0x1856	**PTFDS**	PTFDS7	PTFDS6	PTFDS5	PTFDS4	PTFDS3	PTFDS2	PTFDS1	PTFDS0
0x1857	Reserved	—	—	—	—	—	—	—	—
0x1858	**PTGPE**	0	PTGPE6	PTGPE5	PTGPE4	PTGPE3	PTGPE2	PTGPE1	PTGPE0
0x1859	**PTGSE**	0	PTGSE6	PTGSE5	PTGSE4	PTGSE3	PTGSE2	PTGSE1	PTGSE0
0x185A	**PTGDS**	0	PTGDS6	PTGDS5	PTGDS4	PTGDS3	PTGDS2	PTGDS1	PTGDS0
0x185B– 0x185F	Reserved	— —	— —	— —	— —	— —	— —	— —	— —

[1] This reserved bit must always be written to 0.

Nonvolatile FLASH registers, shown in Table 4-4, are located in the FLASH memory. These registers include an 8-byte backdoor key which optionally can be used to gain access to secure memory resources. During reset events, the contents of NVPROT and NVOPT in the nonvolatile register area of the FLASH memory are transferred into corresponding FPROT and FOPT working registers in the high-page registers to control security and block protection options.

Table 4-4. Nonvolatile Register Summary

Address	Register Name	Bit 7	6	5	4	3	2	1	Bit 0
$FFB0 – $FFB7	**NVBACKKEY**	8-Byte Comparison Key							
$FFB8 – $FFBB	Reserved	—	—	—	—	—	—	—	—
$FFBC	Reserved for storage of 250 kHz ICGTRM value	—	—	—	—	—	—	—	—
$FFBD	**NVPROT**	FPS7	FPS6	FPS5	FPS4	FPS3	FPS2	FPS1	FPDIS
$FFBE	Reserved for storage of 243 kHz ICGTRM value	—	—	—	—	—	—	—	—
$FFBF	**NVOPT**	KEYEN	FNORED	0	0	0	0	SEC01	SEC00

Provided the key enable (KEYEN) bit is 1, the 8-byte comparison key can be used to temporarily disengage memory security. This key mechanism can be accessed only through user code running in secure memory. (A security key cannot be entered directly through background debug commands.) This security key can be disabled completely by programming the KEYEN bit to 0. If the security key is disabled, the only way to disengage security is by mass erasing the FLASH if needed (normally through the background debug interface) and verifying that FLASH is blank. To avoid returning to secure mode after the next reset, program the security bits (SEC01:SEC00) to the unsecured state (1:0).

4.3 RAM

The MC9S08AC60 Series includes static RAM. The locations in RAM below 0x0100 can be accessed using the more efficient direct addressing mode, and any single bit in this area can be accessed with the bit manipulation instructions (BCLR, BSET, BRCLR, and BRSET). Locating the most frequently accessed program variables in this area of RAM is preferred.

The RAM retains data when the MCU is in low-power wait, stop2, or stop3 mode. At power-on, the contents of RAM are uninitialized. RAM data is unaffected by any reset provided that the supply voltage does not drop below the minimum value for RAM retention.

For compatibility with older M68HC05 MCUs, the HCS08 resets the stack pointer to 0x00FF. In the MC9S08AC60 Series, it is usually best to re-initialize the stack pointer to the top of the RAM so the direct page RAM can be used for frequently accessed RAM variables and bit-addressable program variables. Include the following 2-instruction sequence in your reset initialization routine (where RamLast is equated to the highest address of the RAM in the Freescale-provided equate file).

```
LDHX    #RamLast+1    ;point one past RAM
TXS                   ;SP<-(H:X-1)
```

When security is enabled, the RAM is considered a secure memory resource and is not accessible through BDM or through code executing from non-secure memory. See Section 4.5, "Security" for a detailed description of the security feature.

4.4 FLASH

The FLASH memory is intended primarily for program storage. In-circuit programming allows the operating program to be loaded into the FLASH memory after final assembly of the application product. It is possible to program the entire array through the single-wire background debug interface. Because no special voltages are needed for FLASH erase and programming operations, in-application programming is also possible through other software-controlled communication paths. For a more detailed discussion of in-circuit and in-application programming, refer to the *HCS08 Family Reference Manual, Volume I,* Freescale Semiconductor document order number HCS08RMv1/D.

4.4.1 Features

Features of the FLASH memory include:

- FLASH Size
  - MC9S08AC60 — 61268 bytes (120 pages of 512 bytes each)
  - MC9S08AC48 — 49152 bytes (96 pages of 512 bytes each)
  - MC9S08AC32 — 32768 bytes (64 pages of 512 bytes each)
- Single power supply program and erase
- Command interface for fast program and erase operation
- Up to 100,000 program/erase cycles at typical voltage and temperature
- Flexible block protection
- Security feature for FLASH and RAM
- Auto power-down for low-frequency read accesses

4.4.2 Program and Erase Times

Before any program or erase command can be accepted, the FLASH clock divider register (FCDIV) must be written to set the internal clock for the FLASH module to a frequency (f_{FCLK}) between 150 kHz and 200 kHz (see Table 4.6.1). This register can be written only once, so normally this write is done during reset initialization. FCDIV cannot be written if the access error flag, FACCERR in FSTAT, is set. The user must ensure that FACCERR is not set before writing to the FCDIV register. One period of the resulting clock ($1/f_{FCLK}$) is used by the command processor to time program and erase pulses. An integer number of these timing pulses is used by the command processor to complete a program or erase command.

Table 4-5 shows program and erase times. The bus clock frequency and FCDIV determine the frequency of FCLK (f_{FCLK}). The time for one cycle of FCLK is $t_{FCLK} = 1/f_{FCLK}$. The times are shown as a number of cycles of FCLK and as an absolute time for the case where $t_{FCLK} = 5$ µs. Program and erase times

shown include overhead for the command state machine and enabling and disabling of program and erase voltages.

Table 4-5. Program and Erase Times

Parameter	Cycles of FCLK	Time if FCLK = 200 kHz
Byte program	9	45 μs
Byte program (burst)	4	20 μs[1]
Page erase	4000	20 ms
Mass erase	20,000	100 ms

[1] Excluding start/end overhead

4.4.3 Program and Erase Command Execution

The steps for executing any of the commands are listed below. The FCDIV register must be initialized and any error flags cleared before beginning command execution. The command execution steps are:

1. Write a data value to an address in the FLASH array. The address and data information from this write is latched into the FLASH interface. This write is a required first step in any command sequence. For erase and blank check commands, the value of the data is not important. For page erase commands, the address may be any address in the 512-byte page of FLASH to be erased. For mass erase and blank check commands, the address can be any address in the FLASH memory. Whole pages of 512 bytes are the smallest blocks of FLASH that may be erased. In the 60K version, there are two instances where the size of a block that is accessible to the user is less than 512 bytes: the first page following RAM, and the first page following the high page registers. These pages are overlapped by the RAM and high page registers, respectively.

NOTE

Do not program any byte in the FLASH more than once after a successful erase operation. Reprogramming bits in a byte which is already programmed is not allowed without first erasing the page in which the byte resides or mass erasing the entire FLASH memory. Programming without first erasing may disturb data stored in the FLASH.

2. Write the command code for the desired command to FCMD. The five valid commands are blank check ($05), byte program ($20), burst program ($25), page erase ($40), and mass erase ($41). The command code is latched into the command buffer.
3. Write a 1 to the FCBEF bit in FSTAT to clear FCBEF and launch the command (including its address and data information).

A partial command sequence can be aborted manually by writing a 0 to FCBEF any time after the write to the memory array and before writing the 1 that clears FCBEF and launches the complete command. Aborting a command in this way sets the FACCERR access error flag which must be cleared before starting a new command.

A strictly monitored procedure must be adhered to, or the command will not be accepted. This minimizes the possibility of any unintended change to the FLASH memory contents. The command complete flag (FCCF) indicates when a command is complete. The command sequence must be completed by clearing

FCBEF to launch the command. The FCDIV register must be initialized before using any FLASH commands. This must be done only once following a reset.

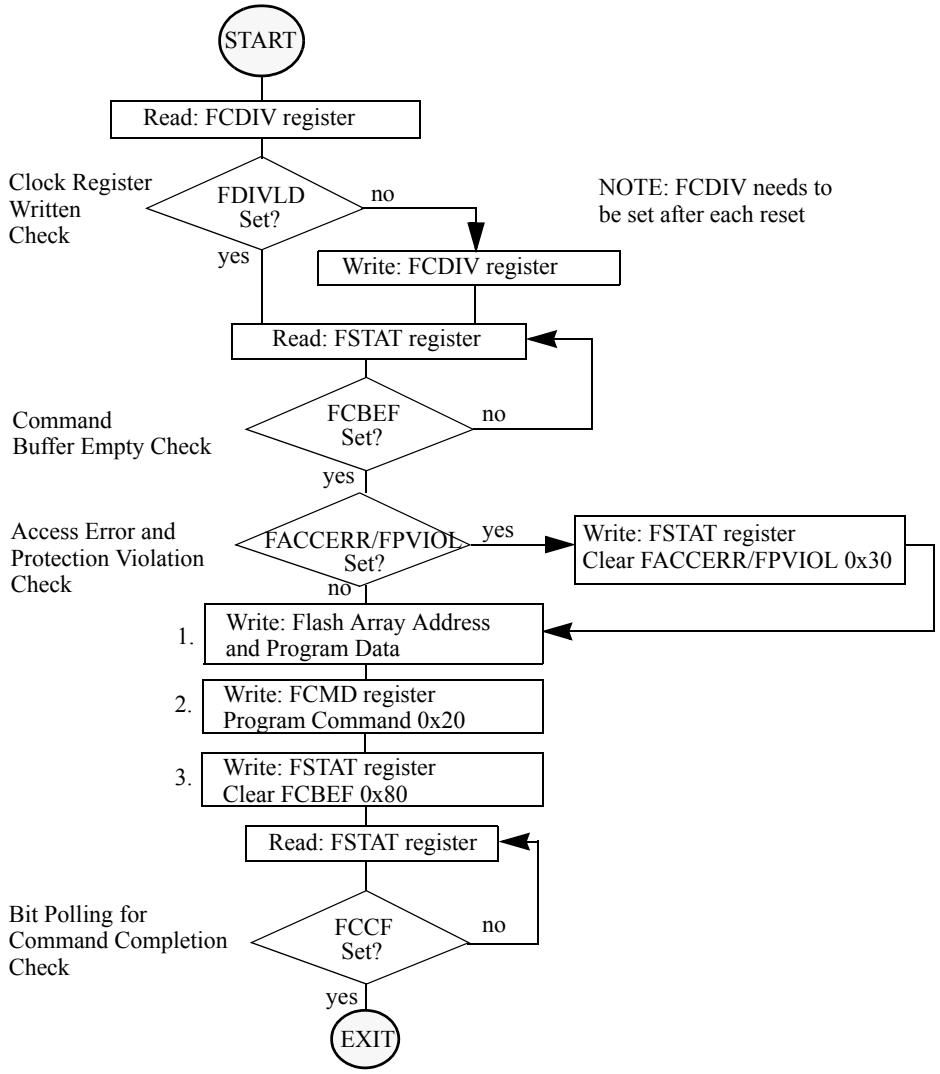

Figure 4-2. Example Program Command Flow

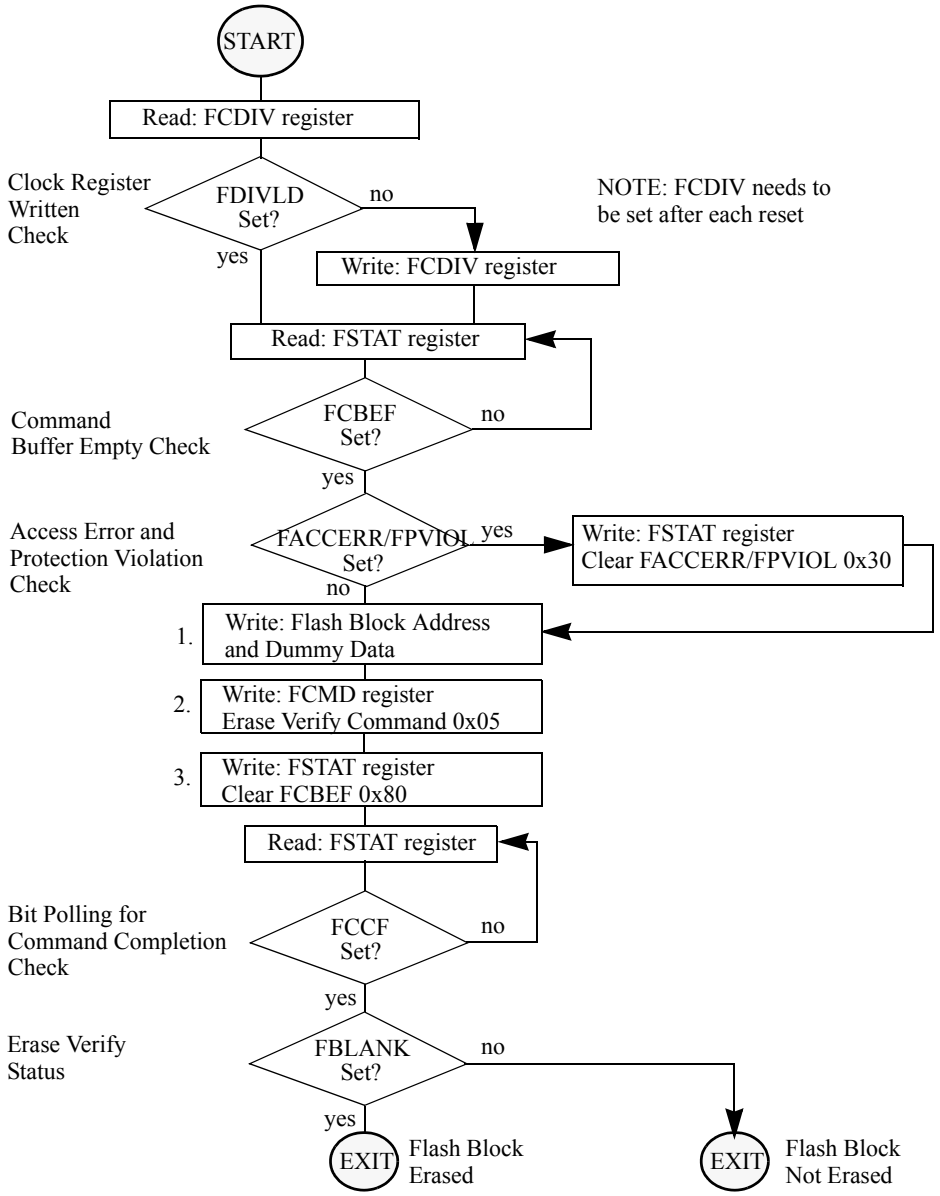

Figure 4-3. Example Erase Verify Command Flow

4.4.4 Burst Program Execution

The burst program command is used to program sequential bytes of data in less time than would be required using the standard program command. This is possible because the high voltage to the FLASH array does not need to be disabled between program operations. Ordinarily, when a program or erase command is issued, an internal charge pump associated with the FLASH memory must be enabled to supply high voltage to the array. Upon completion of the command, the charge pump is turned off. When

a burst program command is issued, the charge pump is enabled and then remains enabled after completion of the burst program operation if the following two conditions are met:

1. The next burst program command has been queued before the current program operation has completed.
2. The next sequential address selects a byte on the same physical row as the current byte being programmed. A row of FLASH memory consists of 64 bytes. A byte within a row is selected by addresses A5 through A0. A new row begins when addresses A5 through A0 are all zero.

The first byte of a series of sequential bytes being programmed in burst mode will take the same amount of time to program as a byte programmed in standard mode. Subsequent bytes will program in the burst program time provided that the conditions above are met. In the case the next sequential address is the beginning of a new row, the program time for that byte will be the standard time instead of the burst time. This is because the high voltage to the array must be disabled and then enabled again. If a new burst command has not been queued before the current command completes, then the charge pump will be disabled and high voltage removed from the array.

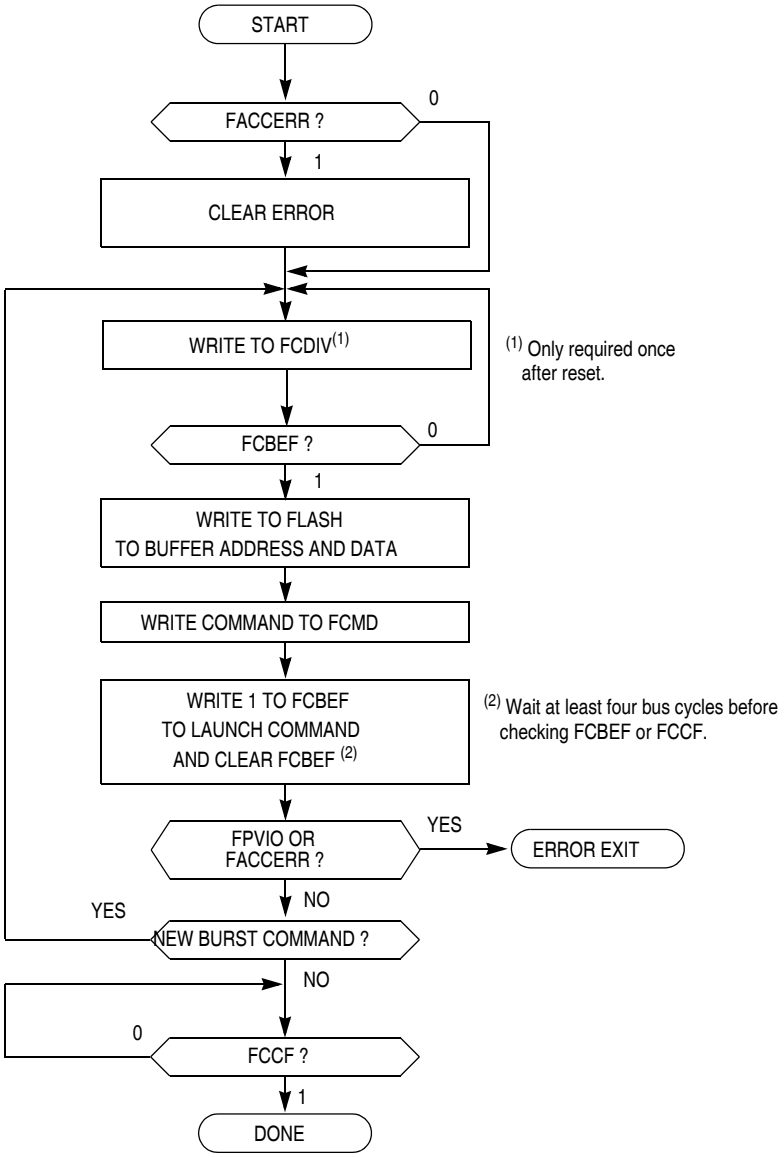

Figure 4-4. FLASH Burst Program Flowchart

4.4.5 Access Errors

An access error occurs whenever the command execution protocol is violated.

- Any of the following specific actions will cause the access error flag (FACCERR) in FSTAT to be set. FACCERR must be cleared by writing a 1 to FACCERR in FSTAT before any command can be processed.
- Writing to a FLASH address before the internal FLASH clock frequency has been set by writing to the FCDIV register
- Writing to a FLASH address while FCBEF is not set (A new command cannot be started until the command buffer is empty.)
- Writing a second time to a FLASH address before launching the previous command (There is only one write to FLASH for every command.)
- Writing a second time to FCMD before launching the previous command (There is only one write to FCMD for every command.)
- Writing to any FLASH control register other than FCMD after writing to a FLASH address
- Writing any command code other than the five allowed codes ($05, $20, $25, $40, or $41) to FCMD
- Writing any FLASH control register other than the write to FSTAT (to clear FCBEF and launch the command) after writing the command to FCMD
- The MCU enters stop mode while a program or erase command is in progress (The command is aborted.)
- Writing the byte program, burst program, or page erase command code ($20, $25, or $40) with a background debug command while the MCU is secured (The background debug controller can only do blank check and mass erase commands when the MCU is secure.)
- Writing 0 to FCBEF to cancel a partial command

4.4.6 FLASH Block Protection

Block protection prevents program or erase changes for FLASH memory locations in a designated address range. Mass erase is disabled when any block of FLASH is protected. The MC9S08AC60 Series allows a block of memory at the end of FLASH, and/or the entire FLASH memory to be block protected. A disable control bit and a 7-bit control field, allows the user to set the size of this block. All eight of these control bits are located in the FPROT register (see Section 4.6.4, “FLASH Protection Register (FPROT and NVPROT)”).

At reset, the high-page register (FPROT) is loaded with the contents of the NVPROT location which is in the nonvolatile register block of the FLASH memory. The value in FPROT cannot be changed directly from application software so a runaway program cannot alter the block protection settings. If the last 512 bytes of FLASH which includes the NVPROT register is protected, the application program cannot alter the block protection settings (intentionally or unintentionally). The FPROT control bits can be written by background debug commands to allow a way to erase a protected FLASH memory.

One use for block protection is to block protect an area of FLASH memory for a bootloader program. This bootloader program then can be used to erase the rest of the FLASH memory and reprogram it. Because the bootloader is protected, it remains intact even if MCU power is lost in the middle of an erase and reprogram operation.

4.4.7 Vector Redirection

Whenever any block protection is enabled, the reset and interrupt vectors will be protected. Vector redirection allows users to modify interrupt vector information without unprotecting bootloader and reset vector space. Vector redirection is enabled by programming the FNORED bit in the NVOPT register located at address $FFBF to zero. For redirection to occur, at least some portion but not all of the FLASH memory must be block protected by programming the NVPROT register located at address $FFBD. All of the interrupt vectors (memory locations $FFC0–$FFFD) are redirected, while the reset vector ($FFFE:FFFF) is not. When more than 32K is protected, vector redirection must not be enabled.

For example, if 512 bytes of FLASH are protected, the protected address region is from $FE00 through $FFFF. The interrupt vectors ($FFC0–$FFFD) are redirected to the locations $FDC0–$FDFD. Now, if an SPI interrupt is taken for instance, the values in the locations $FDE0:FDE1 are used for the vector instead of the values in the locations $FFE0:FFE1. This allows the user to reprogram the unprotected portion of the FLASH with new program code including new interrupt vector values while leaving the protected area, which includes the default vector locations, unchanged.

4.5 Security

The MC9S08AC60 Series includes circuitry to prevent unauthorized access to the contents of FLASH and RAM memory. When security is engaged, FLASH and RAM are considered secure resources. Direct-page registers, high-page registers, and the background debug controller are considered unsecured resources. Programs executing within secure memory have normal access to any MCU memory locations and resources. Attempts to access a secure memory location with a program executing from an unsecured memory space or through the background debug interface are blocked (writes are ignored and reads return all 0s).

Security is engaged or disengaged based on the state of two nonvolatile register bits (SEC01:SEC00) in the FOPT register. During reset, the contents of the nonvolatile location NVOPT are copied from FLASH into the working FOPT register in high-page register space. A user engages security by programming the NVOPT location which can be done at the same time the FLASH memory is programmed. The 1:0 state disengages security while the other three combinations engage security. Notice the erased state (1:1) makes the MCU secure. During development, whenever the FLASH is erased, it is good practice to immediately program the SEC00 bit to 0 in NVOPT so SEC01:SEC00 = 1:0. This would allow the MCU to remain unsecured after a subsequent reset.

The on-chip debug module cannot be enabled while the MCU is secure. The separate background debug controller can still be used for background memory access commands, but the MCU cannot enter active background mode except by holding BKGD/MS low at the rising edge of reset.

A user can choose to allow or disallow a security unlocking mechanism through an 8-byte backdoor security key. If the nonvolatile KEYEN bit in NVOPT/FOPT is 0, the backdoor key is disabled and there is no way to disengage security without completely erasing all FLASH locations. If KEYEN is 1, a secure user program can temporarily disengage security by:

1. Writing 1 to KEYACC in the FCNFG register. This makes the FLASH module interpret writes to the backdoor comparison key locations (NVBACKKEY through NVBACKKEY+7) as values to be compared against the key rather than as the first step in a FLASH program or erase command.

2. Writing the user-entered key values to the NVBACKKEY through NVBACKKEY+7 locations. These writes must be done in order, starting with the value for NVBACKKEY and ending with NVBACKKEY+7. STHX should not be used for these writes because these writes cannot be done on adjacent bus cycles. User software normally would get the key codes from outside the MCU system through a communication interface such as a serial I/O.
3. Writing 0 to KEYACC in the FCNFG register. If the 8-byte key that was just written matches the key stored in the FLASH locations, SEC01:SEC00 are automatically changed to 1:0 and security will be disengaged until the next reset.

The security key can be written only from RAM, so it cannot be entered through background commands without the cooperation of a secure user program. The FLASH memory cannot be accessed by read operations while KEYACC is set.

The backdoor comparison key (NVBACKKEY through NVBACKKEY+7) is located in FLASH memory locations in the nonvolatile register space so users can program these locations just as they would program any other FLASH memory location. The nonvolatile registers are in the same 512-byte block of FLASH as the reset and interrupt vectors, so block protecting that space also block protects the backdoor comparison key. Block protects cannot be changed from user application programs, so if the vector space is block protected, the backdoor security key mechanism cannot permanently change the block protect, security settings, or the backdoor key.

Security can always be disengaged through the background debug interface by performing these steps:

1. Disable any block protections by writing FPROT. FPROT can be written only with background debug commands, not from application software.
2. Mass erase FLASH, if necessary.
3. Blank check FLASH. Provided FLASH is completely erased, security is disengaged until the next reset.

   To avoid returning to secure mode after the next reset, program NVOPT so SEC01:SEC00 = 1:0.

4.6 FLASH Registers and Control Bits

The FLASH module has nine 8-bit registers in the high-page register space, three locations in the nonvolatile register space in FLASH memory that are copied into three corresponding high-page control registers at reset. There is also an 8-byte comparison key in FLASH memory. Refer to Table 4-3 and Table 4-4 for the absolute address assignments for all FLASH registers. This section refers to registers and control bits only by their names. A Freescale-provided equate or header file normally is used to translate these names into the appropriate absolute addresses.

4.6.1 FLASH Clock Divider Register (FCDIV)

Bit 7 of this register is a read-only status flag. Bits 6 through 0 may be read at any time but can be written only one time. Before any erase or programming operations are possible, write to this register to set the frequency of the clock for the nonvolatile memory system within acceptable limits.

	7	6	5	4	3	2	1	0
R	DIVLD	PRDIV8	DIV5	DIV4	DIV3	DIV2	DIV1	DIV0
W								
Reset	0	0	0	0	0	0	0	0

= Unimplemented or Reserved

Figure 4-5. FLASH Clock Divider Register (FCDIV)

Table 4-6. FCDIV Field Descriptions

Field	Description
7 DIVLD	**Divisor Loaded Status Flag** — When set, this read-only status flag indicates that the FCDIV register has been written since reset. Reset clears this bit and the first write to this register causes this bit to become set regardless of the data written. 0 FCDIV has not been written since reset; erase and program operations disabled for FLASH. 1 FCDIV has been written since reset; erase and program operations enabled for FLASH.
6 PRDIV8	**Prescale (Divide) FLASH Clock by 8** 0 Clock input to the FLASH clock divider is the bus rate clock. 1 Clock input to the FLASH clock divider is the bus rate clock divided by 8.
5 DIV[5:0]	**Divisor for FLASH Clock Divider** — The FLASH clock divider divides the bus rate clock (or the bus rate clock divided by 8 if PRDIV8 = 1) by the value in the 6-bit DIV5:DIV0 field plus one. The resulting frequency of the internal FLASH clock must fall within the range of 200 kHz to 150 kHz for proper FLASH operations. Program/erase timing pulses are one cycle of this internal FLASH clock, which corresponds to a range of 5 μs to 6.7 μs. The automated programming logic uses an integer number of these pulses to complete an erase or program operation. See Equation 4-1 and Equation 4-2. Table 4-7 shows the appropriate values for PRDIV8 and DIV5:DIV0 for selected bus frequencies.

$$\text{if PRDIV8} = 0 \text{ — } f_{FCLK} = f_{Bus} \div ([DIV5:DIV0] + 1) \qquad \textit{Eqn. 4-1}$$

$$\text{if PRDIV8} = 1 \text{ — } f_{FCLK} = f_{Bus} \div (8 \times ([DIV5:DIV0] + 1)) \qquad \textit{Eqn. 4-2}$$

Table 4-7. FLASH Clock Divider Settings

f_{Bus}	PRDIV8 (Binary)	DIV5:DIV0 (Decimal)	f_{FCLK}	Program/Erase Timing Pulse (5 μs Min, 6.7 μs Max)
20 MHz	1	12	192.3 kHz	5.2 μs
10 MHz	0	49	200 kHz	5 μs
8 MHz	0	39	200 kHz	5 μs
4 MHz	0	19	200 kHz	5 μs
2 MHz	0	9	200 kHz	5 μs
1 MHz	0	4	200 kHz	5 μs
200 kHz	0	0	200 kHz	5 μs
150 kHz	0	0	150 kHz	6.7 μs

4.6.2 FLASH Options Register (FOPT and NVOPT)

During reset, the contents of the nonvolatile location NVOPT are copied from FLASH into FOPT. Bits 5 through 2 are not used and always read 0. This register may be read at any time, but writes have no meaning or effect. To change the value in this register, erase and reprogram the NVOPT location in FLASH memory as usual and then issue a new MCU reset.

	7	6	5	4	3	2	1	0
R	KEYEN	FNORED	0	0	0	0	SEC01	SEC00
W								
Reset	This register is loaded from nonvolatile location NVOPT during reset.							

= Unimplemented or Reserved

Figure 4-6. FLASH Options Register (FOPT)

Table 4-8. FOPT Field Descriptions

Field	Description
7 KEYEN	**Backdoor Key Mechanism Enable** — When this bit is 0, the backdoor key mechanism cannot be used to disengage security. The backdoor key mechanism is accessible only from user (secured) firmware. BDM commands cannot be used to write key comparison values that would unlock the backdoor key. For more detailed information about the backdoor key mechanism, refer to Section 4.5, "Security." 0 No backdoor key access allowed. 1 If user firmware writes an 8-byte value that matches the nonvolatile backdoor key (NVBACKKEY through NVBACKKEY+7, in that order), security is temporarily disengaged until the next MCU reset.
6 FNORED	**Vector Redirection Disable** — When this bit is 1, vector redirection is disabled. 0 Vector redirection enabled. 1 Vector redirection disabled.
1:0 SEC0[1:0]	**Security State Code** — This 2-bit field determines the security state of the MCU as shown below. When the MCU is secure, the contents of RAM and FLASH memory cannot be accessed by instructions from any unsecured source including the background debug interface. For more detailed information about security, refer to Section 4.5, "Security." 00 Secure 01 Secure 10 Unsecured 11 Secure SEC0[1:0] changes to 10 after successful backdoor key entry or a successful blank check of FLASH.

4.6.3 FLASH Configuration Register (FCNFG)

Bits 7 through 5 may be read or written at any time. Bits 4 through 0 always read 0 and cannot be written.

	7	6	5	4	3	2	1	0
R	0	0	KEYACC	0	0	0	0	0
W								
Reset	0	0	0	0	0	0	0	0

= Unimplemented or Reserved

Figure 4-7. FLASH Configuration Register (FCNFG)

Table 4-9. FCNFG Field Descriptions

Field	Description
5 KEYACC	**Enable Writing of Access Key** — This bit enables writing of the backdoor comparison key. For more detailed information about the backdoor key mechanism, refer to Section 4.5, “Security.” 0 Writes to $FFB0–$FFB7 are interpreted as the start of a FLASH programming or erase command. 1 Writes to NVBACKKEY ($FFB0–$FFB7) are interpreted as comparison key writes. Reads of the FLASH return invalid data.

4.6.4 FLASH Protection Register (FPROT and NVPROT)

During reset, the contents of the nonvolatile location NVPROT is copied from FLASH into FPROT. This register may be read at any time, but user program writes have no meaning or effect. Background debug commands can write to FPROT.

	7	6	5	4	3	2	1	0
R	FPS7	FPS6	FPS5	FPS4	FPS3	FPS2	FPS1	FPDIS
W	(1)	(1)	(1)	(1)	(1)	(1)	(1)	(1)
Reset	This register is loaded from nonvolatile location NVPROT during reset.							

1 Background commands can be used to change the contents of these bits in FPROT.

Figure 4-8. FLASH Protection Register (FPROT)

Table 4-10. FPROT Register Field Descriptions

Field	Description
7:1 FPS[7:1]	**FLASH Protect Select Bits** — When FPDIS = 0, this 7-bit field determines the ending address of unprotected FLASH locations at the high address end of the FLASH. Protected FLASH locations cannot be erased or programmed.
0 FPDIS	**FLASH Protection Disable** 0 FLASH block specified by FPS[7:1] is block protected (program and erase not allowed). 1 No FLASH block is protected.

4.6.5 FLASH Status Register (FSTAT)

Bits 3, 1, and 0 always read 0 and writes have no meaning or effect. The remaining five bits are status bits that can be read at any time. Writes to these bits have special meanings that are discussed in the bit descriptions.

	7	6	5	4	3	2	1	0
R	FCBEF	FCCF	FPVIOL	FACCERR	0	FBLANK	0	0
W								
Reset	1	1	0	0	0	0	0	0

= Unimplemented or Reserved

Figure 4-9. FLASH Status Register (FSTAT)

Table 4-11. FSTAT Field Descriptions

Field	Description
7 FCBEF	**FLASH Command Buffer Empty Flag** — The FCBEF bit is used to launch commands. It also indicates that the command buffer is empty so that a new command sequence can be executed when performing burst programming. The FCBEF bit is cleared by writing a 1 to it or when a burst program command is transferred to the array for programming. Only burst program commands can be buffered. 0 Command buffer is full (not ready for additional commands). 1 A new burst program command may be written to the command buffer.
6 FCCF	**FLASH Command Complete Flag** — FCCF is set automatically when the command buffer is empty and no command is being processed. FCCF is cleared automatically when a new command is started (by writing 1 to FCBEF to register a command). Writing to FCCF has no meaning or effect. 0 Command in progress 1 All commands complete
5 FPVIOL	**Protection Violation Flag** — FPVIOL is set automatically when FCBEF is cleared to register a command that attempts to erase or program a location in a protected block (the erroneous command is ignored). FPVIOL is cleared by writing a 1 to FPVIOL. 0 No protection violation. 1 An attempt was made to erase or program a protected location.
4 FACCERR	**Access Error Flag** — FACCERR is set automatically when the proper command sequence is not followed exactly (the erroneous command is ignored), if a program or erase operation is attempted before the FCDIV register has been initialized, or if the MCU enters stop while a command was in progress. For a more detailed discussion of the exact actions that are considered access errors, see Section 4.4.5, "Access Errors." FACCERR is cleared by writing a 1 to FACCERR. Writing a 0 to FACCERR has no meaning or effect. 0 No access error has occurred. 1 An access error has occurred.
2 FBLANK	**FLASH Verified as All Blank (Erased) Flag** — FBLANK is set automatically at the conclusion of a blank check command if the entire FLASH array was verified to be erased. FBLANK is cleared by clearing FCBEF to write a new valid command. Writing to FBLANK has no meaning or effect. 0 After a blank check command is completed and FCCF = 1, FBLANK = 0 indicates the FLASH array is not completely erased. 1 After a blank check command is completed and FCCF = 1, FBLANK = 1 indicates the FLASH array is completely erased (all $FF).

4.6.6 FLASH Command Register (FCMD)

Only five command codes are recognized in normal user modes as shown in Table 4-13. Refer to Section 4.4.3, "Program and Erase Command Execution" for a detailed discussion of FLASH programming and erase operations.

	7	6	5	4	3	2	1	0
R	0	0	0	0	0	0	0	0
W	FCMD7	FCMD6	FCMD5	FCMD4	FCMD3	FCMD2	FCMD1	FCMD0
Reset	0	0	0	0	0	0	0	0

Figure 4-10. FLASH Command Register (FCMD)

Table 4-12. FCMD Field Descriptions

Field	Description
7:0 FCMD[7:0]	See Table 4-13 for a description of FCMD[7:0].

Table 4-13. FLASH Commands

Command	FCMD	Equate File Label
Blank check	$05	mBlank
Byte program	$20	mByteProg
Byte program — burst mode	$25	mBurstProg
Page erase (512 bytes/page)	$40	mPageErase
Mass erase (all FLASH)	$41	mMassErase

All other command codes are illegal and generate an access error.

It is not necessary to perform a blank check command after a mass erase operation. Only blank check is required as part of the security unlocking mechanism.

Chapter 5
Resets, Interrupts, and System Configuration

5.1 Introduction

This chapter discusses basic reset and interrupt mechanisms and the various sources of reset and interrupts in the MC9S08AC60 Series. Some interrupt sources from peripheral modules are discussed in greater detail within other chapters of this data manual. This chapter gathers basic information about all reset and interrupt sources in one place for easy reference. A few reset and interrupt sources, including the computer operating properly (COP) watchdog and real-time interrupt (RTI), are not part of on-chip peripheral systems with their own sections but are part of the system control logic.

5.2 Features

Reset and interrupt features include:

- Multiple sources of reset for flexible system configuration and reliable operation:
  - Power-on detection (POR)
  - Low voltage detection (LVD) with enable
  - External $\overline{\text{RESET}}$ pin
  - COP watchdog with enable and two timeout choices
  - Illegal opcode
  - Serial command from a background debug host
- Reset status register (SRS) to indicate source of most recent reset
- Separate interrupt vectors for each module (reduces polling overhead) (see Table 5-11)

5.3 MCU Reset

Resetting the MCU provides a way to start processing from a known set of initial conditions. During reset, most control and status registers are forced to initial values and the program counter is loaded from the reset vector (0xFFFE:0xFFFF). On-chip peripheral modules are disabled and I/O pins are initially configured as general-purpose high-impedance inputs with pullup devices disabled. The I bit in the condition code register (CCR) is set to block maskable interrupts so the user program has a chance to initialize the stack pointer (SP) and system control settings. SP is forced to 0x00FF at reset.

The MC9S08AC60 Series has several sources for reset:

- Power-on reset (POR)
- Low-voltage detect (LVD)
- Computer operating properly (COP) timer

- Illegal opcode detect
- Background debug forced reset
- The reset pin ($\overline{\text{RESET}}$)
- Clock generator loss of lock and loss of clock reset

Each of these sources, with the exception of the background debug forced reset, has an associated bit in the system reset status register. Whenever the MCU enters reset, the internal clock generator (ICG) module switches to self-clocked mode with the frequency of f_{Self_reset} selected. The reset pin is driven low for 34 bus cycles where the internal bus frequency is half the ICG frequency. After the 34 bus cycles are completed, the pin is released and will be pulled up by the internal pullup resistor, unless it is held low externally. After the pin is released, it is sampled after another 38 bus cycles to determine whether the reset pin is the cause of the MCU reset.

5.4 Computer Operating Properly (COP) Watchdog

The COP watchdog is intended to force a system reset when the application software fails to execute as expected. To prevent a system reset from the COP timer (when it is enabled), application software must reset the COP counter periodically. If the application program gets lost and fails to reset the COP counter before it times out, a system reset is generated to force the system back to a known starting point.

After any reset, the COPE becomes set in SOPT enabling the COP watchdog (see Section 5.9.4, "System Options Register (SOPT)," for additional information). If the COP watchdog is not used in an application, it can be disabled by clearing COPE. The COP counter is reset by writing any value to the address of SRS. This write does not affect the data in the read-only SRS. Instead, the act of writing to this address is decoded and sends a reset signal to the COP counter.

The COPCLKS bit in SOPT2 (see Section 5.9.10, "System Options Register 2 (SOPT2)," for additional information) selects the clock source used for the COP timer. The clock source options are either the bus clock or an internal 1-kHz clock source. With each clock source, there is an associated short and long time-out controlled by COPT in SOPT. Table 5-1 summaries the control functions of the COPCLKS and COPT bits. The COP watchdog defaults to operation from the bus clock source and the associated long time-out (2^{18} cycles).

Table 5-1. COP Configuration Options

Control Bits		Clock Source	COP Overflow Count
COPCLKS	COPT		
0	0	~1 kHz	2^5 cycles (32 ms)[1]
0	1	~1 kHz	2^8 cycles (256 ms)[1]
1	0	Bus	2^{13} cycles
1	1	Bus	2^{18} cycles

[1] Values are shown in this column based on t_{RTI} = 1 ms. See t_{RTI} in the appendix Section A.10.1, "Control Timing," for the tolerance of this value.

Even if the application will use the reset default settings of COPE, COPCLKS, and COPT, the user must write to the write-once SOPT and SOPT2 registers during reset initialization to lock in the settings. That way, they cannot be changed accidentally if the application program gets lost. The initial writes to SOPT and SOPT2 will reset the COP counter.

The write to SRS that services (clears) the COP counter must not be placed in an interrupt service routine (ISR) because the ISR could continue to be executed periodically even if the main application program fails.

In background debug mode, the COP counter will not increment.

When the bus clock source is selected, the COP counter does not increment while the system is in stop mode. The COP counter resumes as soon as the MCU exits stop mode.

When the 1-kHz clock source is selected, the COP counter is re-initialized to zero upon entry to stop mode. The COP counter begins from zero after the MCU exits stop mode.

5.5 Interrupts

Interrupts provide a way to save the current CPU status and registers, execute an interrupt service routine (ISR), and then restore the CPU status so processing resumes where it left off before the interrupt. Other than the software interrupt (SWI), which is a program instruction, interrupts are caused by hardware events such as an edge on the IRQ pin or a timer-overflow event. The debug module can also generate an SWI under certain circumstances.

If an event occurs in an enabled interrupt source, an associated read-only status flag will become set. The CPU will not respond until and unless the local interrupt enable is a logic 1 to enable the interrupt. The I bit in the CCR is 0 to allow interrupts. The global interrupt mask (I bit) in the CCR is initially set after reset which masks (prevents) all maskable interrupt sources. The user program initializes the stack pointer and performs other system setup before clearing the I bit to allow the CPU to respond to interrupts.

When the CPU receives a qualified interrupt request, it completes the current instruction before responding to the interrupt. The interrupt sequence obeys the same cycle-by-cycle sequence as the SWI instruction and consists of:

- Saving the CPU registers on the stack
- Setting the I bit in the CCR to mask further interrupts
- Fetching the interrupt vector for the highest-priority interrupt that is currently pending
- Filling the instruction queue with the first three bytes of program information starting from the address fetched from the interrupt vector locations

While the CPU is responding to the interrupt, the I bit is automatically set to avoid the possibility of another interrupt interrupting the ISR itself (this is called nesting of interrupts). Normally, the I bit is restored to 0 when the CCR is restored from the value stacked on entry to the ISR. In rare cases, the I bit may be cleared inside an ISR (after clearing the status flag that generated the interrupt) so that other interrupts can be serviced without waiting for the first service routine to finish. This practice is not recommended for anyone other than the most experienced programmers because it can lead to subtle program errors that are difficult to debug.

The interrupt service routine ends with a return-from-interrupt (RTI) instruction which restores the CCR, A, X, and PC registers to their pre-interrupt values by reading the previously saved information off the stack.

NOTE

For compatibility with the M68HC08, the H register is not automatically saved and restored. It is good programming practice to push H onto the stack at the start of the interrupt service routine (ISR) and restore it immediately before the RTI that is used to return from the ISR.

When two or more interrupts are pending when the I bit is cleared, the highest priority source is serviced first (see Table 5-2).

5.5.1 Interrupt Stack Frame

Figure 5-1 shows the contents and organization of a stack frame. Before the interrupt, the stack pointer (SP) points at the next available byte location on the stack. The current values of CPU registers are stored on the stack starting with the low-order byte of the program counter (PCL) and ending with the CCR. After stacking, the SP points at the next available location on the stack which is the address that is one less than the address where the CCR was saved. The PC value that is stacked is the address of the instruction in the main program that would have executed next if the interrupt had not occurred.

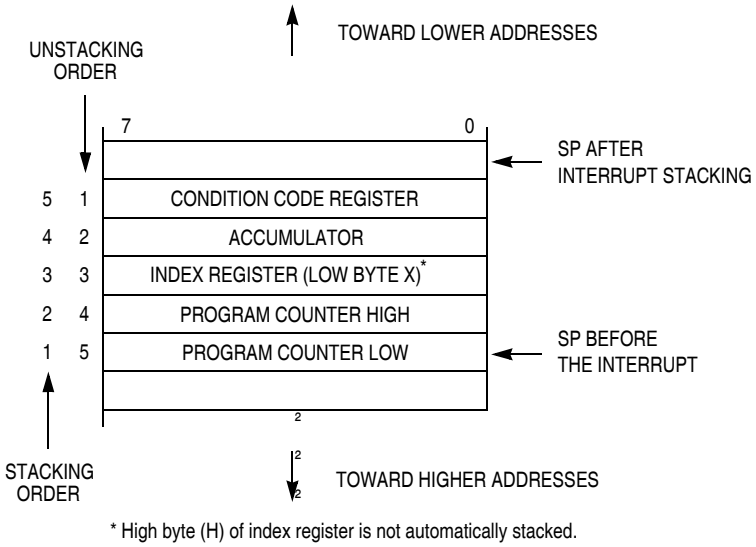

Figure 5-1. Interrupt Stack Frame

When an RTI instruction is executed, these values are recovered from the stack in reverse order. As part of the RTI sequence, the CPU fills the instruction pipeline by reading three bytes of program information, starting from the PC address recovered from the stack.

The status flag causing the interrupt must be acknowledged (cleared) before returning from the ISR. Typically, the flag should be cleared at the beginning of the ISR so that if another interrupt is generated by this same source, it will be registered so it can be serviced after completion of the current ISR.

5.5.2 External Interrupt Request (IRQ) Pin

External interrupts are managed by the IRQSC status and control register. When the IRQ function is enabled, synchronous logic monitors the pin for edge-only or edge-and-level events. When the MCU is in stop mode and system clocks are shut down, a separate asynchronous path is used so the IRQ (if enabled) can wake the MCU.

5.5.2.1 Pin Configuration Options

The IRQ pin enable (IRQPE) control bit in the IRQSC register must be 1 in order for the IRQ pin to act as the interrupt request (IRQ) input. As an IRQ input, the user can choose the polarity of edges or levels detected (IRQEDG), whether the pin detects edges-only or edges and levels (IRQMOD), and whether an event causes an interrupt or only sets the IRQF flag which can be polled by software.

The IRQ pin, when enabled, defaults to use an internal pull device (IRQPDD = 0), configured as a pull-up or pull-down depending on the polarity chosen. If the user desires to use an external pull-up or pull-down, the IRQPDD can be written to a 1 to turn off the internal device.

BIH and BIL instructions may be used to detect the level on the IRQ pin when the pin is configured to act as the IRQ input.

NOTE

- The voltage measured on the pulled up IRQ pin may be as low as V_{DD}-0.7 V. The internal gates connected to this pin are pulled all the way to V_{DD}. All other pins with the enabled pullup resistor will have an unloaded measurement of V_{DD}.
- When enabling the IRQ pin for use, the IRQF will be set, and should be cleared prior to enabling the interrupt. When configuring the pin for falling edge and level sensitivity in a 5V system, it is necessary to wait at least 6 cycles between clearing the flag and enabling the interrupt.

5.5.2.2 Edge and Level Sensitivity

The IRQMOD control bit reconfigures the detection logic so it detects edge events and pin levels. In this edge detection mode, the IRQF status flag becomes set when an edge is detected (when the IRQ pin changes from the deasserted to the asserted level), but the flag is continuously set (and cannot be cleared) as long as the IRQ pin remains at the asserted level.

5.5.3 Interrupt Vectors, Sources, and Local Masks

Table 5-2 provides a summary of all interrupt sources. Higher-priority sources are located toward the bottom of the table. The high-order byte of the address for the interrupt service routine is located at the first address in the vector address column, and the low-order byte of the address for the interrupt service routine is located at the next higher address.

When an interrupt condition occurs, an associated flag bit becomes set. If the associated local interrupt enable is 1, an interrupt request is sent to the CPU. Within the CPU, if the global interrupt mask (I bit in the CCR) is 0, the CPU will finish the current instruction, stack the PCL, PCH, X, A, and CCR CPU

registers, set the I bit, and then fetch the interrupt vector for the highest priority pending interrupt. Processing then continues in the interrupt service routine.

Table 5-2. Vector Summary

Vector Priority	Vector No.	Address (High/Low)	Vector Name	Module	Source	Enable	Description
Lower	29 – 31	0xFFC0/FFC1 – 0xFFC4/0xFFC5	Unused vector space (available for user program)				
↑	28	0xFFC6/FFC7	Vtpm3ovf	TPM3	TOF	TOIE	TPM3 overflow
	27	0xFFC8/FFC9	Vtpm3ch1	TPM3	CH1F	CH1IE	TPM3 channel 1
	26	0xFFCA/FFCB	Vtpm3ch0	TPM3	CH0F	CH0IF	TPM3 channel 0
	25	0xFFCC/FFCD	Vrti	System control	RTIF	RTIE	Real-time interrupt
	24	0xFFCE/FFCF	Viic1	IIC1	IICIF	IICIE	IIC1
	23	0xFFD0/FFD1	Vadc1	ADC1	COCO	AIEN	ADC1
	22	0xFFD2/FFD3	Vkeyboard 1	KBI1	KBF	KBIE	KBI1 pins
	21	0xFFD4/FFD5	Vsci2tx	SCI2	TDRE, TC	TIE, TCIE	SCI2 transmit
	20	0xFFD6/FFD7	Vsci2rx	SCI2	IDLE, RDRF, LDBKDIF, RXEDGIF	ILIE, RIE, LBKDIE, RXEDGIE	SCI2 receive
	19	0xFFD8/FFD9	Vsci2err	SCI2	OR, NF, FE, PF	ORIE, NFIE, FEIE, PFIE	SCI2 error
	18	0xFFDA/FFDB	Vsci1tx	SCI1	TDRE TC	TIE TCIE	SCI1 transmit
	17	0xFFDC/FFDD	Vsci1rx	SCI1	IDLE, RDRF, LDBKDIF, RXEDGIF	ILIE, RIE, LBKDIE, RXEDGIE	SCI1 receive
	16	0xFFDE/FFDF	Vsci1err	SCI1	OR, NF, FE, PF	ORIE, NFIE, FEIE, PFIE	SCI1 error
	15	0xFFE0/FFE1	Vspi1	SPI1	SPIF, MODF, SPTEF	SPIE, SPIE, SPTIE	SPI1
	14	0xFFE2/FFE3	Vtpm2ovf	TPM2	TOF	TOIE	TPM2 overflow
	13	0xFFE4/FFE5	Vtpm2ch1	TPM2	CH1F	CH1IE	TPM2 channel 1
	12	0xFFE6/FFE7	Vtpm2ch0	TPM2	CH0F	CH0IE	TPM2 channel 0
	11	0xFFE8/FFE9	Vtpm1ovf	TPM1	TOF	TOIE	TPM1 overflow
	10	0xFFEA/FFEB	Vtpm1ch5	TPM1	CH5F	CH5IE	TPM1 channel 5
	9	0xFFEC/FFED	Vtpm1ch4	TPM1	CH4F	CH4IE	TPM1 channel 4
	8	0xFFEE/FFEF	Vtpm1ch3	TPM1	CH3F	CH3IE	TPM1 channel 3
	7	0xFFF0/FFF1	Vtpm1ch2	TPM1	CH2F	CH2IE	TPM1 channel 2
	6	0xFFF2/FFF3	Vtpm1ch1	TPM1	CH1F	CH1IE	TPM1 channel 1
	5	0xFFF4/FFF5	Vtpm1ch0	TPM1	CH0F	CH0IE	TPM1 channel 0
	4	0xFFF6/FFF7	Vicg	ICG	ICGIF (LOLS/LOCS)	LOLRE/LOCRE	ICG
	3	0xFFF8/FFF9	Vlvd	System control	LVDF	LVDIE	Low-voltage detect
	2	0xFFFA/FFFB	Virq	IRQ	IRQF	IRQIE	IRQ pin
	1	0xFFFC/FFFD	Vswi	Core	SWI Instruction	—	Software interrupt
↓ Higher	0	0xFFFE/FFFF	Vreset	System control	COP LVD $\overline{\text{RESET}}$ pin Illegal opcode	COPE LVDRE — —	Watchdog timer Low-voltage detect External pin Illegal opcode

5.6 Low-Voltage Detect (LVD) System

The MC9S08AC60 Series includes a system to protect against low voltage conditions in order to protect memory contents and control MCU system states during supply voltage variations. The system is comprised of a power-on reset (POR) circuit and an LVD circuit with a user selectable trip voltage, either high (V_{LVDH}) or low (V_{LVDL}). The LVD circuit is enabled when LVDE in SPMSC1 is high and the trip voltage is selected by LVDV in SPMSC2. The LVD is disabled upon entering any of the stop modes unless the LVDSE bit is set. If LVDSE and LVDE are both set, then the MCU cannot enter stop2, and the current consumption in stop3 with the LVD enabled will be greater.

5.6.1 Power-On Reset Operation

When power is initially applied to the MCU, or when the supply voltage drops below the V_{POR} level, the POR circuit will cause a reset condition. As the supply voltage rises, the LVD circuit will hold the chip in reset until the supply has risen above the V_{LVDL} level. Both the POR bit and the LVD bit in SRS are set following a POR.

5.6.2 LVD Reset Operation

The LVD can be configured to generate a reset upon detection of a low voltage condition by setting LVDRE to 1. After an LVD reset has occurred, the LVD system will hold the MCU in reset until the supply voltage has risen above the level determined by LVDV. The LVD bit in the SRS register is set following either an LVD reset or POR.

5.6.3 LVD Interrupt Operation

When a low voltage condition is detected and the LVD circuit is configured for interrupt operation (LVDE set, LVDIE set, and LVDRE clear), then LVDF will be set and an LVD interrupt will occur.

5.6.4 Low-Voltage Warning (LVW)

The LVD system has a low voltage warning flag to indicate to the user that the supply voltage is approaching, but is still above, the LVD voltage. The LVW does not have an interrupt associated with it. There are two user selectable trip voltages for the LVW, one high (V_{LVWH}) and one low (V_{LVWL}). The trip voltage is selected by LVWV in SPMSC2. Setting the LVW trip voltage equal to the LVD trip voltage is not recommended. Typical use of the LVW would be to select V_{LVWH} and V_{LVDL}.

5.7 Real-Time Interrupt (RTI)

The real-time interrupt function can be used to generate periodic interrupts. The RTI can accept two sources of clocks, the 1-kHz internal clock or an external clock if available. The 1-kHz internal clock source is completely independent of any bus clock source and is used only by the RTI module and, on some MCUs, the COP watchdog. To use an external clock source, it must be available and active. The RTICLKS bit in SRTISC is used to select the RTI clock source.

Either RTI clock source can be used when the MCU is in run, wait or stop3 mode. When using the external oscillator in stop3, it must be enabled in stop (OSCSTEN = 1) and configured for low bandwidth operation (RANGE = 0). Only the internal 1-kHz clock source can be selected to wake the MCU from stop2 mode.

The SRTISC register includes a read-only status flag, a write-only acknowledge bit, and a 3-bit control value (RTIS2:RTIS1:RTIS0) used to disable the clock source to the real-time interrupt or select one of seven wakeup periods. The RTI has a local interrupt enable, RTIE, to allow masking of the real-time interrupt. The RTI can be disabled by writing each bit of RTIS to zeroes, and no interrupts will be generated. See Section 5.9.7, "System Real-Time Interrupt Status and Control Register (SRTISC)," for detailed information about this register.

5.8 MCLK Output

The PTC2 pin is shared with the MCLK clock output. Setting the pin enable bit, MPE, causes the PTC2 pin to output a divided version of the internal MCU bus clock. The divide ratio is determined by the MCSEL bits. When MPE is set, the PTC2 pin is forced to operate as an output pin regardless of the state of the port data direction control bit for the pin. If the MCSEL bits are all 0s, the pin is driven low. The slew rate and drive strength for the pin are controlled by PTCSE2 and PTCDS2, respectively. The maximum clock output frequency is limited if slew rate control is enabled, see the electrical chapter for pin rise and fall times with slew rate enabled.

5.9 Reset, Interrupt, and System Control Registers and Control Bits

One 8-bit register in the direct page register space and eight 8-bit registers in the high-page register space are related to reset and interrupt systems.

Refer to the direct-page register summary in Chapter 4, "Memory," of this data sheet for the absolute address assignments for all registers. This section refers to registers and control bits only by their names. A Freescale-provided equate or header file is used to translate these names into the appropriate absolute addresses.

Some control bits in the SOPT and SPMSC2 registers are related to modes of operation. Although brief descriptions of these bits are provided here, the related functions are discussed in greater detail in Chapter 3, "Modes of Operation."

5.9.1 Interrupt Pin Request Status and Control Register (IRQSC)

This direct page register includes status and control bits which are used to configure the IRQ function, report status, and acknowledge IRQ events.

	7	6	5	4	3	2	1	0
R	0	IRQPDD	IRQEDG	IRQPE	IRQF	0	IRQIE	IRQMOD
W						IRQACK		
Reset	0	0	0	0	0	0	0	0

= Unimplemented or Reserved

Figure 5-2. Interrupt Request Status and Control Register (IRQSC)

Table 5-3. IRQSC Register Field Descriptions

Field	Description
6 IRQPDD	**Interrupt Request (IRQ) Pull Device Disable—**This read/write control bit is used to disable the internal pullup device when the IRQ pin is enabled (IRQPE = 1) allowing for an external device to be used. 0 IRQ pull device enabled if IRQPE = 1. 1 IRQ pull device disabled if IRQPE = 1.
5 IRQEDG	**Interrupt Request (IRQ) Edge Select** — This read/write control bit is used to select the polarity of edges or levels on the IRQ pin that cause IRQF to be set. The IRQMOD control bit determines whether the IRQ pin is sensitive to both edges and levels or only edges. When the IRQ pin is enabled as the IRQ input and is configured to detect rising edges, the optional pullup resistor is re-configured as an optional pulldown resistor. 0 IRQ is falling edge or falling edge/low-level sensitive. 1 IRQ is rising edge or rising edge/high-level sensitive.
4 IRQPE	**IRQ Pin Enable** — This read/write control bit enables the IRQ pin function. When this bit is set the IRQ pin can be used as an interrupt request. Also, when this bit is set, either an internal pull-up or an internal pull-down resistor is enabled depending on the state of the IRQMOD bit. 0 IRQ pin function is disabled. 1 IRQ pin function is enabled.
3 IRQF	**IRQ Flag** — This read-only status bit indicates when an interrupt request event has occurred. 0 No IRQ request. 1 IRQ event detected.
2 IRQACK	**IRQ Acknowledge** — This write-only bit is used to acknowledge interrupt request events (write 1 to clear IRQF). Writing 0 has no meaning or effect. Reads always return logic 0. If edge-and-level detection is selected (IRQMOD = 1), IRQF cannot be cleared while the IRQ pin remains at its asserted level.
1 IRQIE	**IRQ Interrupt Enable** — This read/write control bit determines whether IRQ events generate a hardware interrupt request. 0 Hardware interrupt requests from IRQF disabled (use polling). 1 Hardware interrupt requested whenever IRQF = 1.
0 IRQMOD	**IRQ Detection Mode** — This read/write control bit selects either edge-only detection or edge-and-level detection. The IRQEDG control bit determines the polarity of edges and levels that are detected as interrupt request events. See Section 5.5.2.2, “Edge and Level Sensitivity” for more details. 0 IRQ event on falling edges or rising edges only. 1 IRQ event on falling edges and low levels or on rising edges and high levels.

5.9.2 System Reset Status Register (SRS)

This register includes read-only status flags to indicate the source of the most recent reset. When a debug host forces reset by writing 1 to BDFR in the SBDFR register, none of the status bits in SRS will be set. Writing any value to this register address clears the COP watchdog timer without affecting the contents of this register. The reset state of these bits depends on what caused the MCU to reset.

	7	6	5	4	3	2	1	0
R	POR	PIN	COP	ILOP	Reserved	ICG	LVD	0
W	Writing any value to SIMRS address clears COP watchdog timer.							
POR	1	0	0	0	0	0	1	0
LVR:	U	0	0	0	0	0	1	0
Any other reset:	0	(1)	(1)	(1)	0	(1)	0	0

U = Unaffected by reset

1 Any of these reset sources that are active at the time of reset will cause the corresponding bit(s) to be set; bits corresponding to sources that are not active at the time of reset will be cleared.

Figure 5-3. System Reset Status (SRS)

Table 5-4. SRS Register Field Descriptions

Field	Description
7 POR	**Power-On Reset** — Reset was caused by the power-on detection logic. Because the internal supply voltage was ramping up at the time, the low-voltage reset (LVR) status bit is also set to indicate that the reset occurred while the internal supply was below the LVR threshold. 0 Reset not caused by POR. 1 POR caused reset.
6 PIN	**External Reset Pin** — Reset was caused by an active-low level on the external reset pin. 0 Reset not caused by external reset pin. 1 Reset came from external reset pin.
5 COP	**Computer Operating Properly (COP) Watchdog** — Reset was caused by the COP watchdog timer timing out. This reset source may be blocked by COPE = 0. 0 Reset not caused by COP timeout. 1 Reset caused by COP timeout.
4 ILOP	**Illegal Opcode** — Reset was caused by an attempt to execute an unimplemented or illegal opcode. The STOP instruction is considered illegal if stop is disabled by STOPE = 0 in the SOPT register. The BGND instruction is considered illegal if active background mode is disabled by ENBDM = 0 in the BDCSC register. 0 Reset not caused by an illegal opcode. 1 Reset caused by an illegal opcode.

Table 5-4. SRS Register Field Descriptions (continued)

Field	Description
2 ICG	**Internal Clock Generation Module Reset** — Reset was caused by an ICG module reset. 0 Reset not caused by ICG module. 1 Reset caused by ICG module.
1 LVD	**Low Voltage Detect** — If the LVDRE and LVDSE bits are set and the supply drops below the LVD trip voltage, an LVD reset will occur. This bit is also set by POR. 0 Reset not caused by LVD trip or POR. 1 Reset caused by LVD trip or POR.

5.9.3 System Background Debug Force Reset Register (SBDFR)

This register contains a single write-only control bit. A serial background command such as WRITE_BYTE must be used to write to SBDFR. Attempts to write this register from a user program are ignored. Reads always return 0x00.

	7	6	5	4	3	2	1	0
R	0	0	0	0	0	0	0	0
W								BDFR[1]
Reset	0	0	0	0	0	0	0	0

= Unimplemented or Reserved

[1] BDFR is writable only through serial background debug commands, not from user programs.

Figure 5-4. System Background Debug Force Reset Register (SBDFR)

Table 5-5. SBDFR Register Field Descriptions

Field	Description
0 BDFR	**Background Debug Force Reset** — A serial background command such as WRITE_BYTE may be used to allow an external debug host to force a target system reset. Writing logic 1 to this bit forces an MCU reset. This bit cannot be written from a user program.

5.9.4 System Options Register (SOPT)

This register may be read at any time. Bits 3 and 2 are unimplemented and always read 0. This is a write-once register so only the first write after reset is honored. Any subsequent attempt to write to SOPT (intentionally or unintentionally) is ignored to avoid accidental changes to these sensitive settings. SOPT should be written during the user's reset initialization program to set the desired controls even if the desired settings are the same as the reset settings.

	7	6	5	4	3	2	1	0
R	COPE	COPT	STOPE		0	0		
W								
Reset	1	1	0	1	0	0	1	1

= Unimplemented or Reserved

Figure 5-5. System Options Register (SOPT)

Table 5-6. SOPT Register Field Descriptions

Field	Description
7 COPE	**COP Watchdog Enable** — This write-once bit defaults to 1 after reset. 0 COP watchdog timer disabled. 1 COP watchdog timer enabled (force reset on timeout).
6 COPT	**COP Watchdog Timeout** — This write-once bit defaults to 1 after reset. 0 Short timeout period selected. 1 Long timeout period selected.
5 STOPE	**Stop Mode Enable** — This write-once bit defaults to 0 after reset, which disables stop mode. If stop mode is disabled and a user program attempts to execute a STOP instruction, an illegal opcode reset is forced. 0 Stop mode disabled. 1 Stop mode enabled.

5.9.5 System MCLK Control Register (SMCLK)

This register is used to control the MCLK clock output.

	7	6	5	4	3	2	1	0
R	0	0	0	MPE	0	MCSEL		
W								
Reset	0	0	0	0	0	0	0	0

= Unimplemented or Reserved

Figure 5-6. System MCLK Control Register (SMCLK)

Table 5-7. SMCLK Register Field Descriptions

Field	Description
4 MPE	**MCLK Pin Enable** — This bit is used to enable the MCLK function. 0 MCLK output disabled. 1 MCLK output enabled on PTC2 pin.
2:0 MCSEL	**MCLK Divide Select** — These bits are used to select the divide ratio for the MCLK output according to the formula below when the MCSEL bits are not equal to all zeroes. In the case that the MCSEL bits are all zero and MPE is set, the pin is driven low. See Equation 5-1.

$$\text{MCLK frequency} = \text{Bus Clock frequency} \div (2 * \text{MCSEL}) \qquad \textit{Eqn. 5-1}$$

5.9.6 System Device Identification Register (SDIDH, SDIDL)

This read-only register is included so host development systems can identify the HCS08 derivative and revision number. This allows the development software to recognize where specific memory blocks, registers, and control bits are located in a target MCU.

	7	6	5	4	3	2	1	0
R					ID11	ID10	ID9	ID8
W								
Reset	—	—	—	—	0	0	0	0

= Unimplemented or Reserved

Figure 5-7. System Device Identification Register — High (SDIDH)

Table 5-8. SDIDH Register Field Descriptions

Field	Description
7:4 Reserved	**Bits 7:4 are reserved. Reading these bits will result in an indeterminate value; writes have no effect.**
3:0 ID[11:8]	**Part Identification Number** — Each derivative in the HCS08 Family has a unique identification number. The MC9S08AC60 Series is hard coded to the value 0x001D. See also ID bits in Table 5-9.

	7	6	5	4	3	2	1	0
R	ID7	ID6	ID5	ID4	ID3	ID2	ID1	ID0
W								
Reset	0	0	0	1	1	1	0	1

= Unimplemented or Reserved

Figure 5-8. System Device Identification Register — Low (SDIDL)

Table 5-9. SDIDL Register Field Descriptions

Field	Description
7:0 ID[7:0]	**Part Identification Number** — Each derivative in the HCS08 Family has a unique identification number. The MC9S08AC60 Series is hard coded to the value 0x001D. See also ID bits in Table 5-8.

5.9.7 System Real-Time Interrupt Status and Control Register (SRTISC)

This register contains one read-only status flag, one write-only acknowledge bit, three read/write delay selects, and three unimplemented bits, which always read 0.

	7	6	5	4	3	2	1	0
R	RTIF	0	RTICLKS	RTIE	0	RTIS2	RTIS1	RTIS0
W		RTIACK						
Reset	0	0	0	0	0	0	0	0

= Unimplemented or Reserved

Figure 5-9. System RTI Status and Control Register (SRTISC)

Table 5-10. SRTISC Register Field Descriptions

Field	Description
7 RTIF	**Real-Time Interrupt Flag** — This read-only status bit indicates the periodic wakeup timer has timed out. 0 Periodic wakeup timer not timed out. 1 Periodic wakeup timer timed out.
6 RTIACK	**Real-Time Interrupt Acknowledge** — This write-only bit is used to acknowledge real-time interrupt request (write 1 to clear RTIF). Writing 0 has no meaning or effect. Reads always return logic 0.
5 RTICLKS	**Real-Time Interrupt Clock Select** — This read/write bit selects the clock source for the real-time interrupt. 0 Real-time interrupt request clock source is internal 1-kHz oscillator. 1 Real-time interrupt request clock source is external clock.
4 RTIE	**Real-Time Interrupt Enable** — This read-write bit enables real-time interrupts. 0 Real-time interrupts disabled. 1 Real-time interrupts enabled.
2:0 RTIS[2:0]	**Real-Time Interrupt Delay Selects** — These read/write bits select the wakeup delay for the RTI. The clock source for the real-time interrupt is a self-clocked source which oscillates at about 1 kHz, is independent of other MCU clock sources. Using external clock source the delays will be crystal frequency divided by value in RTIS2:RTIS1:RTIS0. See Table 5-11.

Table 5-11. Real-Time Interrupt Frequency

RTIS2:RTIS1:RTIS0	1-kHz Clock Source Delay[1]	Using External Clock Source Delay (Crystal Frequency)
0:0:0	Disable periodic wakeup timer	Disable periodic wakeup timer
0:0:1	8 ms	divide by 256
0:1:0	32 ms	divide by 1024
0:1:1	64 ms	divide by 2048
1:0:0	128 ms	divide by 4096
1:0:1	256 ms	divide by 8192
1:1:0	512 ms	divide by 16384
1:1:1	1.024 s	divide by 32768

[1] Normal values are shown in this column based on f_{RTI} = 1 kHz. See Appendix A, “Electrical Characteristics and Timing Specifications,” f_{RTI} for the tolerance on these values.

5.9.8 System Power Management Status and Control 1 Register (SPMSC1)

	7	6	5	4	3	2	1[1]	0
R	LVDF	0	LVDIE	LVDRE(2)	LVDSE(2)	LVDE(2)		BGBE
W		LVDACK						
Reset	0	0	0	1	1	1	0	0

= Unimplemented or Reserved

[1] Bit 1 is a reserved bit that must always be written to 0.

[2] This bit can be written only one time after reset. Additional writes are ignored.

Figure 5-10. System Power Management Status and Control 1 Register (SPMSC1)

Table 5-12. SPMSC1 Register Field Descriptions

Field	Description
7 LVDF	**Low-Voltage Detect Flag** — Provided LVDE = 1, this read-only status bit indicates a low-voltage detect event.
6 LVDACK	**Low-Voltage Detect Acknowledge** — This write-only bit is used to acknowledge low voltage detection errors (write 1 to clear LVDF). Reads always return 0.
5 LVDIE	**Low-Voltage Detect Interrupt Enable** — This read/write bit enables hardware interrupt requests for LVDF. 0 Hardware interrupt disabled (use polling). 1 Request a hardware interrupt when LVDF = 1.
4 LVDRE	**Low-Voltage Detect Reset Enable** — This read/write bit enables LVDF events to generate a hardware reset (provided LVDE = 1). 0 LVDF does not generate hardware resets. 1 Force an MCU reset when LVDF = 1.
3 LVDSE	**Low-Voltage Detect Stop Enable** — Provided LVDE = 1, this read/write bit determines whether the low-voltage detect function operates when the MCU is in stop mode. 0 Low-voltage detect disabled during stop mode. 1 Low-voltage detect enabled during stop mode.
2 LVDE	**Low-Voltage Detect Enable** — This read/write bit enables low-voltage detect logic and qualifies the operation of other bits in this register. 0 LVD logic disabled. 1 LVD logic enabled.
0 BGBE	**Bandgap Buffer Enable** — The BGBE bit is used to enable an internal buffer for the bandgap voltage reference for use by the ADC module on one of its internal channels. 0 Bandgap buffer disabled. 1 Bandgap buffer enabled.

5.9.9 System Power Management Status and Control 2 Register (SPMSC2)

This register is used to report the status of the low voltage warning function, and to configure the stop mode behavior of the MCU.

	7	6	5	4	3	2	1	0
R	LVWF	0	LVDV[1]	LVWV	PPDF	0		PPDC[2]
W		LVWACK				PPDACK		
Power-on reset:	0(3)	0	0	0	0	0	0	0
LVD reset:	0(2)	0	U	U	0	0	0	0
Any other reset:	0(2)	0	U	U	0	0	0	0

= Unimplemented or Reserved U = Unaffected by reset

1 This bit can be written only one time after POR. Additional writes are ignored.
2 This bit can be written only one time after reset. Additional writes are ignored.
3 LVWF will be set in the case when V_{Supply} transitions below the trip point or after reset and V_{Supply} is already below V_{LVW}.

Figure 5-11. System Power Management Status and Control 2 Register (SPMSC2)

Table 5-13. SPMSC2 Register Field Descriptions

Field	Description
7 LVWF	**Low-Voltage Warning Flag** — The LVWF bit indicates the low voltage warning status. 0 Low voltage warning **not** present. 1 Low voltage warning is present or was present.
6 LVWACK	**Low-Voltage Warning Acknowledge** — The LVWACK bit is the low-voltage warning acknowledge. Writing a 1 to LVWACK clears LVWF to a 0 if a low voltage warning is not present.
5 LVDV	**Low-Voltage Detect Voltage Select** — The LVDV bit selects the LVD trip point voltage (V_{LVD}). 0 Low trip point selected ($V_{LVD} = V_{LVDL}$). 1 High trip point selected ($V_{LVD} = V_{LVDH}$).
4 LVWV	**Low-Voltage Warning Voltage Select** — The LVWV bit selects the LVW trip point voltage (V_{LVW}). 0 Low trip point selected ($V_{LVW} = V_{LVWL}$). 1 High trip point selected ($V_{LVW} = V_{LVWH}$).
3 PPDF	**Partial Power Down Flag** — The PPDF bit indicates that the MCU has exited the stop2 mode. 0 Not stop2 mode recovery. 1 Stop2 mode recovery.
2 PPDACK	**Partial Power Down Acknowledge** — Writing a 1 to PPDACK clears the PPDF bit.
0 PPDC	**Partial Power Down Control** — The write-once PPDC bit controls whether stop2 or stop3 mode is selected. 0 Stop3 mode enabled. 1 Stop2, partial power down, mode enabled.

5.9.10 System Options Register 2 (SOPT2)

This high page register contains bits to configure MCU specific features on the MC9S08AC60 Series devices.

	7	6	5	4	3	2	1	0
R	COPCLKS[1]	0	0	0	TPMCCFG	0	0	0
W								
Reset:	1	0	0	0	1	0	0	0

= Unimplemented or Reserved

Figure 5-12. System Options Register 2 (SOPT2)

[1] This bit can be written only one time after reset. Additional writes are ignored.

Table 5-14. SOPT2 Register Field Descriptions

Field	Description
7 COPCLKS	**COP Watchdog Clock Select** — This write-once bit selects the clock source of the COP watchdog. 0 Internal 1-kHz clock is source to COP. 1 Bus clock is source to COP.
3 TPMCCFG	**TPM Clock Configuration** — Configures the timer/pulse-width modulator clock signal. 0 TPMCLK is available to TPM1, TPM2, and TPM3 via the IRQ pin; TPMCLK1 and TPMCLK2 are not available. 1 TPM1CLK, TPM2CLK, and TPMCLK are available to TPM1, TPM2, and TPM3 respectively.

Chapter 6
Parallel Input/Output

6.1 Introduction

This chapter explains software controls related to parallel input/output (I/O). The MC9S08AC60 Series has seven I/O ports which include a total of up to 54 general-purpose I/O pins. See Chapter 2, "Pins and Connections" for more information about the logic and hardware aspects of these pins.

Many of these pins are shared with on-chip peripherals such as timer systems, communication systems, or keyboard interrupts. When these other modules are not controlling the port pins, they revert to general-purpose I/O control.

NOTE

Not all general-purpose I/O pins are available on all packages. To avoid extra current drain from floating input pins, the user's reset initialization routine in the application program should either enable on-chip pullup devices or change the direction of unconnected pins to outputs so the pins do not float.

6.2 Pin Descriptions

The MC9S08AC60 Series has a total of 54 parallel I/O pins in seven ports (PTA–PTG). Not all pins are bonded out in all packages. Consult the pin assignment in Chapter 2, "Pins and Connections," for available parallel I/O pins. All of these pins are available for general-purpose I/O when they are not used by other on-chip peripheral systems.

After reset, the shared peripheral functions are disabled so that the pins are controlled by the parallel I/O. All of the parallel I/O are configured as inputs (PTxDDn = 0). The pin control functions for each pin are configured as follows: slew rate control disabled (PTxSEn = 0), low drive strength selected (PTxDSn = 0), and internal pullups disabled (PTxPEn = 0).

6.3 Parallel I/O Control

Reading and writing of parallel I/O is done through the port data registers. The direction, input or output, is controlled through the port data direction registers. The parallel I/O port function for an individual pin is illustrated in the block diagram below.

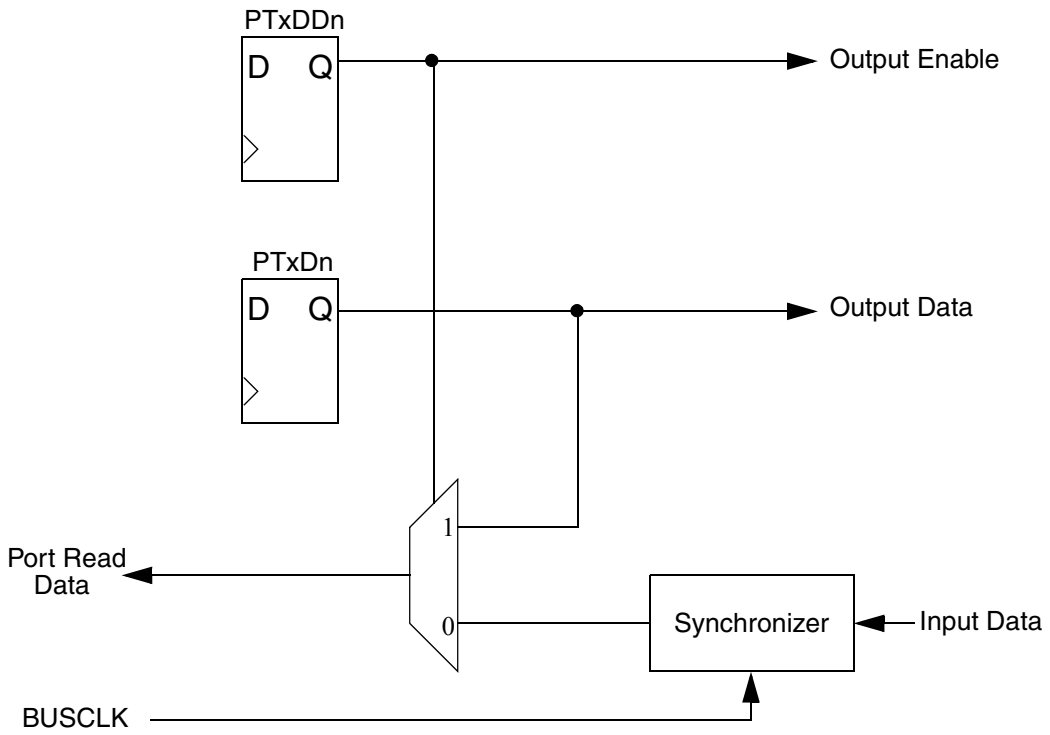

Figure 6-1. Parallel I/O Block Diagram

The data direction control bits determine whether the pin output driver is enabled, and they control what is read for port data register reads. Each port pin has a data direction register bit. When PTxDDn = 0, the corresponding pin is an input and reads of PTxD return the pin value. When PTxDDn = 1, the corresponding pin is an output and reads of PTxD return the last value written to the port data register. When a peripheral module or system function is in control of a port pin, the data direction register bit still controls what is returned for reads of the port data register, even though the peripheral system has overriding control of the actual pin direction.

When a shared analog function is enabled for a pin, all digital pin functions are disabled. A read of the port data register returns a value of 0 for any bits which have shared analog functions enabled. In general, whenever a pin is shared with both an alternate digital function and an analog function, the analog function has priority such that if both the digital and analog functions are enabled, the analog function controls the pin.

It is a good programming practice to write to the port data register before changing the direction of a port pin to become an output. This ensures that the pin will not be driven momentarily with an old data value that happened to be in the port data register.

6.4 Pin Control

The pin control registers are located in the high page register block of the memory. These registers are used to control pullups, slew rate, and drive strength for the I/O pins. The pin control registers operate independently of the parallel I/O registers.

6.4.1 Internal Pullup Enable

An internal pullup device can be enabled for each port pin by setting the corresponding bit in one of the pullup enable registers (PTxPEn). The pullup device is disabled if the pin is configured as an output by the parallel I/O control logic or any shared peripheral function regardless of the state of the corresponding pullup enable register bit. The pullup device is also disabled if the pin is controlled by an analog function.

6.4.2 Output Slew Rate Control Enable

Slew rate control can be enabled for each port pin by setting the corresponding bit in one of the slew rate control registers (PTxSEn). When enabled, slew control limits the rate at which an output can transition in order to reduce EMC emissions. Slew rate control has no effect on pins which are configured as inputs.

6.4.3 Output Drive Strength Select

An output pin can be selected to have high output drive strength by setting the corresponding bit in one of the drive strength select registers (PTxDSn). When high drive is selected a pin is capable of sourcing and sinking greater current. Even though every I/O pin can be selected as high drive, the user must ensure that the total current source and sink limits for the chip are not exceeded. Drive strength selection is intended to affect the DC behavior of I/O pins. However, the AC behavior is also affected. High drive allows a pin to drive a greater load with the same switching speed as a low drive enabled pin into a smaller load. Because of this the EMC emissions may be affected by enabling pins as high drive.

6.5 Pin Behavior in Stop Modes

Depending on the stop mode, I/O functions differently as the result of executing a STOP instruction. An explanation of I/O behavior for the various stop modes follows:

- Stop2 mode is a partial power-down mode, whereby I/O latches are maintained in their state as before the STOP instruction was executed. CPU register status and the state of I/O registers should be saved in RAM before the STOP instruction is executed to place the MCU in stop2 mode. Upon recovery from stop2 mode, before accessing any I/O, the user should examine the state of the PPDF bit in the SPMSC2 register. If the PPDF bit is 0, I/O must be initialized as if a power on reset had occurred. If the PPDF bit is 1, I/O data previously stored in RAM, before the STOP instruction was executed, peripherals may require being initialized and restored to their pre-stop condition. The user must then write a 1 to the PPDACK bit in the SPMSC2 register. Access to I/O is now permitted again in the user's application program.
- In stop3 mode, all I/O is maintained because internal logic circuity stays powered up. Upon recovery, normal I/O function is available to the user.

6.6 Parallel I/O and Pin Control Registers

This section provides information about the registers associated with the parallel I/O ports and pin control functions. These parallel I/O registers are located in page zero of the memory map and the pin control registers are located in the high page register section of memory.

Refer to tables in Chapter 4, "Memory," for the absolute address assignments for all parallel I/O and pin control registers. This section refers to registers and control bits only by their names. A Freescale-provided equate or header file normally is used to translate these names into the appropriate absolute addresses.

6.6.1 Port A I/O Registers (PTAD and PTADD)

Port A parallel I/O function is controlled by the registers listed below.

	7	6	5	4	3	2	1	0
R W	PTAD7	PTAD6	PTAD5	PTAD4	PTAD3	PTAD2	PTAD1	PTAD0
Reset	0	0	0	0	0	0	0	0

Figure 6-2. Port A Data Register (PTAD)

Table 6-1. PTAD Register Field Descriptions

Field	Description
7:0 PTADn	**Port A Data Register Bits** — For port A pins that are inputs, reads return the logic level on the pin. For port A pins that are configured as outputs, reads return the last value written to this register. Writes are latched into all bits of this register. For port A pins that are configured as outputs, the logic level is driven out the corresponding MCU pin. Reset forces PTAD to all 0s, but these 0s are not driven out the corresponding pins because reset also configures all port pins as high-impedance inputs with pullups disabled.

	7	6	5	4	3	2	1	0
R W	PTADD7	PTADD6	PTADD5	PTADD4	PTADD3	PTADD2	PTADD1	PTADD0
Reset	0	0	0	0	0	0	0	0

Figure 6-3. Data Direction for Port A Register (PTADD)

Table 6-2. PTADD Register Field Descriptions

Field	Description
7, 2:0 PTADDn	**Data Direction for Port A Bits** — These read/write bits control the direction of port A pins and what is read for PTAD reads. 0 Input (output driver disabled) and reads return the pin value. 1 Output driver enabled for port A bit n and PTAD reads return the contents of PTADn.

6.6.2 Port A Pin Control Registers (PTAPE, PTASE, PTADS)

In addition to the I/O control, port A pins are controlled by the registers listed below.

	7	6	5	4	3	2	1	0
R W	PTAPE7	PTAPE6	PTAPE5	PTAPE4	PTAPE3	PTAPE2	PTAPE1	PTAPE0
Reset	0	0	0	0	0	0	0	0

Figure 6-4. Internal Pullup Enable for Port A (PTAPE)

Table 6-3. PTADD Register Field Descriptions

Field	Description
7:0 PTAPEn	**Internal Pullup Enable for Port A Bits** — Each of these control bits determines if the internal pullup device is enabled for the associated PTA pin. For port A pins that are configured as outputs, these bits have no effect and the internal pullup devices are disabled. 0 Internal pullup device disabled for port A bit n. 1 Internal pullup device enabled for port A bit n.

	7	6	5	4	3	2	1	0
R W	PTASE7	PTASE6	PTASE5	PTASE4	PTASE3	PTASE2	PTASE1	PTASE0
Reset	0	0	0	0	0	0	0	0

Figure 6-5. Slew Rate Control Enable for Port A (PTASE)

Table 6-4. PTASE Register Field Descriptions

Field	Description
7:0 PTASEn]	**Output Slew Rate Control Enable for Port A Bits** — Each of these control bits determine whether output slew rate control is enabled for the associated PTA pin. For port A pins that are configured as inputs, these bits have no effect. 0 Output slew rate control disabled for port A bit n. 1 Output slew rate control enabled for port A bit n.

	7	6	5	4	3	2	1	0
R W	PTADS7	PTADS6	PTADS5	PTADS4	PTADS3	PTADS2	PTADS1	PTADS0
Reset	0	0	0	0	0	0	0	0

Figure 6-6. Drive Strength Selection for Port A (PTADS)

Table 6-5. PTADS Register Field Descriptions

Field	Description
7:0 PTADSn	**Output Drive Strength Selection for Port A Bits** — Each of these control bits selects between low and high output drive for the associated PTA pin. 0 Low output drive enabled for port A bit n. 1 High output drive enabled for port A bit n.

6.6.3 Port B I/O Registers (PTBD and PTBDD)

Port B parallel I/O function is controlled by the registers in this section.

	7	6	5	4	3	2	1	0
R W	PTBD7	PTBD6	PTBD5	PTBD4	PTBD3	PTBD2	PTBD1	PTBD0
Reset	0	0	0	0	0	0	0	0

Figure 6-7. Port B Data Register (PTBD)

Table 6-6. PTBD Register Field Descriptions

Field	Description
7:0 PTBD[7:0]	**Port B Data Register Bits** — For port B pins that are inputs, reads return the logic level on the pin. For port B pins that are configured as outputs, reads return the last value written to this register. Writes are latched into all bits of this register. For port B pins that are configured as outputs, the logic level is driven out the corresponding MCU pin. Reset forces PTBD to all 0s, but these 0s are not driven out the corresponding pins because reset also configures all port pins as high-impedance inputs with pullups disabled.

	7	6	5	4	3	2	1	0
R W	PTBDD7	PTBDD6	PTBDD5	PTBDD4	PTBDD3	PTBDD2	PTBDD1	PTBDD0
Reset	0	0	0	0	0	0	0	0

Figure 6-8. Data Direction for Port B (PTBDD)

Table 6-7. PTBDD Register Field Descriptions

Field	Description
7:0 PTBDD[7:0]	**Data Direction for Port B Bits** — These read/write bits control the direction of port B pins and what is read for PTBD reads. 0 Input (output driver disabled) and reads return the pin value. 1 Output driver enabled for port B bit n and PTBD reads return the contents of PTBDn.

6.6.4 Port B Pin Control Registers (PTBPE, PTBSE, PTBDS)

In addition to the I/O control, port B pins are controlled by the registers listed below.

	7	6	5	4	3	2	1	0
R W	PTBPE7	PTBPE6	PTBPE5	PTBPE4	PTBPE3	PTBPE2	PTBPE1	PTBPE0
Reset	0	0	0	0	0	0	0	0

Figure 6-9. Internal Pullup Enable for Port B (PTBPE)

Table 6-8. PTBPE Register Field Descriptions

Field	Description
7:0 PTBPE[7:0]	**Internal Pullup Enable for Port B Bits** — Each of these control bits determines if the internal pullup device is enabled for the associated PTB pin. For port B pins that are configured as outputs, these bits have no effect and the internal pullup devices are disabled. 0 Internal pullup device disabled for port B bit n. 1 Internal pullup device enabled for port B bit n.

	7	6	5	4	3	2	1	0
R W	PTBSE7	PTBSE6	PTBSE5	PTBSE4	PTBSE3	PTBSE2	PTBSE1	PTBSE0
Reset	0	0	0	0	0	0	0	0

Figure 6-10. Output Slew Rate Control Enable (PTBSE)

Table 6-9. PTBSE Register Field Descriptions

Field	Description
7:0 PTBSE[7:0]	**Output Slew Rate Control Enable for Port B Bits**— Each of these control bits determine whether output slew rate control is enabled for the associated PTB pin. For port B pins that are configured as inputs, these bits have no effect. 0 Output slew rate control disabled for port B bit n. 1 Output slew rate control enabled for port B bit n.

	7	6	5	4	3	2	1	0
R W	PTBDS7	PTBDS6	PTBDS5	PTBDS4	PTBDS3	PTBDS2	PTBDS1	PTBDS0
Reset	0	0	0	0	0	0	0	0

Figure 6-11. Internal Drive Strength Selection for Port B (PTBDS)

Table 6-10. PTBDS Register Field Descriptions

Field	Description
7:0 PTBDS[7:0]	**Output Drive Strength Selection for Port B Bits** — Each of these control bits selects between low and high output drive for the associated PTB pin. 0 Low output drive enabled for port B bit n. 1 High output drive enabled for port B bit n.

6.6.5 Port C I/O Registers (PTCD and PTCDD)

Port C parallel I/O function is controlled by the registers listed below.

	7	6	5	4	3	2	1	0
R	0	PTCD6	PTCD5	PTCD4	PTCD3	PTCD2	PTCD1	PTCD0
W								
Reset	0	0	0	0	0	0	0	0

Figure 6-12. Port C Data Register (PTCD)

Table 6-11. PTCD Register Field Descriptions

Field	Description
6:0 PTCD[6:0]	**Port C Data Register Bits** — For port C pins that are inputs, reads return the logic level on the pin. For port C pins that are configured as outputs, reads return the last value written to this register. Writes are latched into all bits of this register. For port C pins that are configured as outputs, the logic level is driven out the corresponding MCU pin. Reset forces PTCD to all 0s, but these 0s are not driven out the corresponding pins because reset also configures all port pins as high-impedance inputs with pullups disabled.

	7	6	5	4	3	2	1	0
R	0	PTCDD6	PTCDD5	PTCDD4	PTCDD3	PTCDD2	PTCDD1	PTCDD0
W								
Reset	0	0	0	0	0	0	0	0

Figure 6-13. Data Direction for Port C (PTCDD)

Table 6-12. PTCDD Register Field Descriptions

Field	Description
6:0 PTCDD[6:0]	**Data Direction for Port C Bits** — These read/write bits control the direction of port C pins and what is read for PTCD reads. 0 Input (output driver disabled) and reads return the pin value. 1 Output driver enabled for port C bit n and PTCD reads return the contents of PTCDn.

6.6.6 Port C Pin Control Registers (PTCPE, PTCSE, PTCDS)

In addition to the I/O control, port C pins are controlled by the registers listed below.

	7	6	5	4	3	2	1	0
R	0	PTCPE6	PTCPE5	PTCPE4	PTCPE3	PTCPE2	PTCPE1	PTCPE0
W								
Reset	0	0	0	0	0	0	0	0

Figure 6-14. Internal Pullup Enable for Port C (PTCPE)

Table 6-13. PTCPE Register Field Descriptions

Field	Description
6:0 PTCPE[6:0]	**Internal Pullup Enable for Port C Bits** — Each of these control bits determines if the internal pullup device is enabled for the associated PTC pin. For port C pins that are configured as outputs, these bits have no effect and the internal pullup devices are disabled. 0 Internal pullup device disabled for port C bit n. 1 Internal pullup device enabled for port C bit n.

	7	6	5	4	3	2	1	0
R	0	PTCSE6	PTCSE5	PTCSE4	PTCSE3	PTCSE2	PTCSE1	PTCSE0
W								
Reset	0	0	0	0	0	0	0	0

Figure 6-15. Output Slew Rate Control Enable for Port C (PTCSE)

Table 6-14. PTCSE Register Field Descriptions

Field	Description
6:0 PTCSE[6:0]	**Output Slew Rate Control Enable for Port C Bits** — Each of these control bits determine whether output slew rate control is enabled for the associated PTC pin. For port C pins that are configured as inputs, these bits have no effect. 0 Output slew rate control disabled for port C bit n. 1 Output slew rate control enabled for port C bit n.

	7	6	5	4	3	2	1	0
R	0	PTCDS6	PTCDS5	PTCDS4	PTCDS3	PTCDS2	PTCDS1	PTCDS0
W								
Reset	0	0	0	0	0	0	0	0

Figure 6-16. Output Drive Strength Selection for Port C (PTCDS)

Table 6-15. PTCDS Register Field Descriptions

Field	Description
6:0 PTCDS[6:0]	**Output Drive Strength Selection for Port C Bits** — Each of these control bits selects between low and high output drive for the associated PTC pin. 0 Low output drive enabled for port C bit n. 1 High output drive enabled for port C bit n.

6.6.7 Port D I/O Registers (PTDD and PTDDD)

Port D parallel I/O function is controlled by the registers listed below.

	7	6	5	4	3	2	1	0
R W	PTDD7	PTDD6	PTDD5	PTDD4	PTDD3	PTDD2	PTDD1	PTDD0
Reset	0	0	0	0	0	0	0	0

Figure 6-17. Port D Data Register (PTDD)

Table 6-16. PTDD Register Field Descriptions

Field	Description
7:0 PTDD[7:0]	**Port D Data Register Bits** — For port D pins that are inputs, reads return the logic level on the pin. For port D pins that are configured as outputs, reads return the last value written to this register. Writes are latched into all bits of this register. For port D pins that are configured as outputs, the logic level is driven out the corresponding MCU pin. Reset forces PTDD to all 0s, but these 0s are not driven out the corresponding pins because reset also configures all port pins as high-impedance inputs with pullups disabled.

	7	6	5	4	3	2	1	0
R W	PTDDD7	PTDDD6	PTDDD5	PTDDD4	PTDDD3	PTDDD2	PTDDD1	PTDDD0
Reset	0	0	0	0	0	0	0	0

Figure 6-18. Data Direction for Port D (PTDDD)

Table 6-17. PTDDD Register Field Descriptions

Field	Description
7:0 PTDDD[7:0]	**Data Direction for Port D Bits** — These read/write bits control the direction of port D pins and what is read for PTDD reads. 0 Input (output driver disabled) and reads return the pin value. 1 Output driver enabled for port D bit n and PTDD reads return the contents of PTDDn.

6.6.8 Port D Pin Control Registers (PTDPE, PTDSE, PTDDS)

In addition to the I/O control, port D pins are controlled by the registers listed below.

	7	6	5	4	3	2	1	0
R W	PTDPE7	PTDPE6	PTDPE5	PTDPE4	PTDPE3	PTDPE2	PTDPE1	PTDPE0
Reset	0	0	0	0	0	0	0	0

Figure 6-19. Internal Pullup Enable for Port D (PTDPE)

Table 6-18. PTDPE Register Field Descriptions

Field	Description
7:0 PTDPE[7:0]	**Internal Pullup Enable for Port D Bits** — Each of these control bits determines if the internal pullup device is enabled for the associated PTD pin. For port D pins that are configured as outputs, these bits have no effect and the internal pullup devices are disabled. 0 Internal pullup device disabled for port D bit n. 1 Internal pullup device enabled for port D bit n.

	7	6	5	4	3	2	1	0
R W	PTDSE7	PTDSE6	PTDSE5	PTDSE4	PTDSE3	PTDSE2	PTDSE1	PTDSE0
Reset	0	0	0	0	0	0	0	0

Figure 6-20. Output Slew Rate Control Enable for Port D (PTDSE)

Table 6-19. PTDSE Register Field Descriptions

Field	Description
7:0 PTDSE[7:0]	**Output Slew Rate Control Enable for Port D Bits** — Each of these control bits determine whether output slew rate control is enabled for the associated PTD pin. For port D pins that are configured as inputs, these bits have no effect. 0 Output slew rate control disabled for port D bit n. 1 Output slew rate control enabled for port D bit n.

	7	6	5	4	3	2	1	0
R W	PTDDS7	PTDDS6	PTDDS5	PTDDS4	PTDDS3	PTDDS2	PTDDS1	PTDDS0
Reset	0	0	0	0	0	0	0	0

Figure 6-21. Output Drive Strength Selection for Port D (PTDDS)

Table 6-20. PTDDS Register Field Descriptions

Field	Description
7:0 PTDDS[7:0]	**Output Drive Strength Selection for Port D Bits** — Each of these control bits selects between low and high output drive for the associated PTD pin. 0 Low output drive enabled for port D bit n. 1 High output drive enabled for port D bit n.

6.6.9 Port E I/O Registers (PTED and PTEDD)

Port E parallel I/O function is controlled by the registers listed below.

	7	6	5	4	3	2	1	0
R W	PTED7	PTED6	PTED5	PTED4	PTED3	PTED2	PTED1	PTED0
Reset	0	0	0	0	0	0	0	0

Figure 6-22. Port E Data Register (PTED)

Table 6-21. PTED Register Field Descriptions

Field	Description
7:0 PTED[7:0]	**Port E Data Register Bits** — For port E pins that are inputs, reads return the logic level on the pin. For port E pins that are configured as outputs, reads return the last value written to this register. Writes are latched into all bits of this register. For port E pins that are configured as outputs, the logic level is driven out the corresponding MCU pin. Reset forces PTED to all 0s, but these 0s are not driven out the corresponding pins because reset also configures all port pins as high-impedance inputs with pullups disabled.

	7	6	5	4	3	2	1	0
R W	PTEDD7	PTEDD6	PTEDD5	PTEDD4	PTEDD3	PTEDD2	PTEDD1	PTEDD0
Reset	0	0	0	0	0	0	0	0

Figure 6-23. Data Direction for Port E (PTEDD)

Table 6-22. PTEDD Register Field Descriptions

Field	Description
7:0 PTEDD[7:0]	**Data Direction for Port E Bits** — These read/write bits control the direction of port E pins and what is read for PTED reads. 0 Input (output driver disabled) and reads return the pin value. 1 Output driver enabled for port E bit n and PTED reads return the contents of PTEDn.

6.6.10 Port E Pin Control Registers (PTEPE, PTESE, PTEDS)

In addition to the I/O control, port E pins are controlled by the registers listed below.

	7	6	5	4	3	2	1	0
R W	PTEPE7	PTEPE6	PTEPE5	PTEPE4	PTEPE3	PTEPE2	PTEPE1	PTEPE0
Reset	0	0	0	0	0	0	0	0

Figure 6-24. Internal Pullup Enable for Port E (PTEPE)

Table 6-23. PTEPE Register Field Descriptions

Field	Description
7:0 PTEPE[7:0]	**Internal Pullup Enable for Port E Bits**— Each of these control bits determines if the internal pullup device is enabled for the associated PTE pin. For port E pins that are configured as outputs, these bits have no effect and the internal pullup devices are disabled. 0 Internal pullup device disabled for port E bit n. 1 Internal pullup device enabled for port E bit n.

	7	6	5	4	3	2	1	0
R W	PTESE7	PTESE6	PTESE5	PTESE4	PTESE3	PTESE2	PTESE1	PTESE0
Reset	0	0	0	0	0	0	0	0

Figure 6-25. Output Slew Rate Control Enable for Port E (PTESE)

Table 6-24. PTESE Register Field Descriptions

Field	Description
7:0 PTESE[7:0]	**Output Slew Rate Control Enable for Port E Bits** — Each of these control bits determine whether output slew rate control is enabled for the associated PTE pin. For port E pins that are configured as inputs, these bits have no effect. 0 Output slew rate control disabled for port E bit n. 1 Output slew rate control enabled for port E bit n.

	7	6	5	4	3	2	1	0
R W	PTEDS7	PTEDS6	PTEDS5	PTEDS4	PTEDS3	PTEDS2	PTEDS1	PTEDS0
Reset	0	0	0	0	0	0	0	0

Figure 6-26. Output Drive Strength Selection for Port E (PTEDS)

Table 6-25. PTEDS Register Field Descriptions

Field	Description
7:0 PTEDS[7:0]	**Output Drive Strength Selection for Port E Bits** — Each of these control bits selects between low and high output drive for the associated PTE pin. 0 Low output drive enabled for port E bit n. 1 High output drive enabled for port E bit n.

6.6.11 Port F I/O Registers (PTFD and PTFDD)

Port F parallel I/O function is controlled by the registers listed below.

	7	6	5	4	3	2	1	0
R W	PTFD7	PTFD6	PTFD5	PTFD4	PTFD3	PTFD2	PTFD1	PTFD0
Reset	0	0	0	0	0	0	0	0

Figure 6-27. Port F Data Register (PTFD)

Table 6-26. PTFD Register Field Descriptions

Field	Description
7:0 PTFDn	**Port F Data Register Bits**— For port F pins that are inputs, reads return the logic level on the pin. For port F pins that are configured as outputs, reads return the last value written to this register. Writes are latched into all bits of this register. For port F pins that are configured as outputs, the logic level is driven out the corresponding MCU pin. Reset forces PTFD to all 0s, but these 0s are not driven out the corresponding pins because reset also configures all port pins as high-impedance inputs with pullups disabled.

	7	6	5	4	3	2	1	0
R W	PTFDD7	PTFDD6	PTFDD5	PTFDD4	PTFDD3	PTFDD2	PTFDD1	PTFDD0
Reset	0	0	0	0	0	0	0	0

Figure 6-28. Data Direction for Port F (PTFDD)

Table 6-27. PTFDD Register Field Descriptions

Field	Description
7:0 PTFDDn	**Data Direction for Port F Bits** — These read/write bits control the direction of port F pins and what is read for PTFD reads. 0 Input (output driver disabled) and reads return the pin value. 1 Output driver enabled for port F bit n and PTFD reads return the contents of PTFDn.

6.6.12 Port F Pin Control Registers (PTFPE, PTFSE, PTFDS)

In addition to the I/O control, port F pins are controlled by the registers listed below.

	7	6	5	4	3	2	1	0
R W	PTFPE7	PTFPE6	PTFPE5	PTFPE4	PTFPE3	PTFPE2	PTFPE1	PTFPE0
Reset	0	0	0	0	0	0	0	0

Figure 6-29. Internal Pullup Enable for Port F (PTFPE)

Table 6-28. PTFPE Register Field Descriptions

Field	Description
7:0 PTFPEn	**Internal Pullup Enable for Port F Bits** — Each of these control bits determines if the internal pullup device is enabled for the associated PTF pin. For port F pins that are configured as outputs, these bits have no effect and the internal pullup devices are disabled. 0 Internal pullup device disabled for port F bit n. 1 Internal pullup device enabled for port F bit n.

	7	6	5	4	3	2	1	0
R W	PTFSE7	PTFSE6	PTFSE5	PTFSE4	PTFSE3	PTFSE2	PTFSE1	PTFSE0
Reset	0	0	0	0	0	0	0	0

Figure 6-30. Output Slew Rate Control Enable for Port F (PTFSE)

Table 6-29. PTFSE Register Field Descriptions

Field	Description
7:0 PTFSEn	**Output Slew Rate Control Enable for Port F Bits** — Each of these control bits determine whether output slew rate control is enabled for the associated PTF pin. For port F pins that are configured as inputs, these bits have no effect. 0 Output slew rate control disabled for port F bit n. 1 Output slew rate control enabled for port F bit n.

	7	6	5	4	3	2	1	0
R W	PTFDS7	PTFDS6	PTFDS5	PTFDS4	PTFDS3	PTFDS2	PTFDS1	PTFDS0
Reset	0	0	0	0	0	0	0	0

Figure 6-31. Output Drive Strength Selection for Port F (PTFDS)

Table 6-30. PTFDS Register Field Descriptions

Field	Description
7:0 PTFDSn	**Output Drive Strength Selection for Port F Bits** — Each of these control bits selects between low and high output drive for the associated PTF pin. 0 Low output drive enabled for port F bit n. 1 High output drive enabled for port F bit n.

6.6.13 Port G I/O Registers (PTGD and PTGDD)

Port G parallel I/O function is controlled by the registers listed below.

	7	6	5	4	3	2	1	0
R	0	PTGD6	PTGD5	PTGD4	PTGD3	PTGD2	PTGD1	PTGD0
W								
Reset	0	0	0	0	0	0	0	0

Figure 6-32. Port G Data Register (PTGD)

Table 6-31. PTGD Register Field Descriptions

Field	Description
6:0 PTGD[6:0]	**Port G Data Register Bits** — For port G pins that are inputs, reads return the logic level on the pin. For port G pins that are configured as outputs, reads return the last value written to this register. Writes are latched into all bits of this register. For port G pins that are configured as outputs, the logic level is driven out the corresponding MCU pin. Reset forces PTGD to all 0s, but these 0s are not driven out the corresponding pins because reset also configures all port pins as high-impedance inputs with pullups disabled.

	7	6	5	4	3	2	1	0
R	0	PTGDD6	PTGDD5	PTGDD4	PTGDD3	PTGDD2	PTGDD1	PTGDD0
W								
Reset	0	0	0	0	0	0	0	0

Figure 6-33. Data Direction for Port G (PTGDD)

Table 6-32. PTGDD Register Field Descriptions

Field	Description
6:0 PTGDD[6:0]	**Data Direction for Port G Bits** — These read/write bits control the direction of port G pins and what is read for PTGD reads. 0 Input (output driver disabled) and reads return the pin value. 1 Output driver enabled for port G bit n and PTGD reads return the contents of PTGDn.

6.6.14 Port G Pin Control Registers (PTGPE, PTGSE, PTGDS)

In addition to the I/O control, port G pins are controlled by the registers listed below.

	7	6	5	4	3	2	1	0
R	0	PTGPE6	PTGPE5	PTGPE4	PTGPE3	PTGPE2	PTGPE1	PTGPE0
W								
Reset	0	0	0	0	0	0	0	0

Figure 6-34. Internal Pullup Enable for Port G Bits (PTGPE)

Table 6-33. PTGPE Register Field Descriptions

Field	Description
6:0 PTGPE[6:0]	**Internal Pullup Enable for Port G Bits** — Each of these control bits determines if the internal pullup device is enabled for the associated PTG pin. For port G pins that are configured as outputs, these bits have no effect and the internal pullup devices are disabled. 0 Internal pullup device disabled for port G bit n. 1 Internal pullup device enabled for port G bit n.

	7	6	5	4	3	2	1	0
R	0	PTGSE6	PTGSE5	PTGSE4	PTGSE3	PTGSE2	PTGSE1	PTGSE0
W								
Reset	0	0	0	0	0	0	0	0

Figure 6-35. Output Slew Rate Control Enable for Port G Bits (PTGSE)

Table 6-34. PTGSE Register Field Descriptions

Field	Description
6:0 PTGSE[6:0]	**Output Slew Rate Control Enable for Port G Bits**— Each of these control bits determine whether output slew rate control is enabled for the associated PTG pin. For port G pins that are configured as inputs, these bits have no effect. 0 Output slew rate control disabled for port G bit n. 1 Output slew rate control enabled for port G bit n.

	7	6	5	4	3	2	1	0
R	0	PTGDS6	PTGDS5	PTGDS4	PTGDS3	PTGDS2	PTGDS1	PTGDS0
W								
Reset	0	0	0	0	0	0	0	0

Figure 6-36. Output Drive Strength Selection for Port G (PTGDS)

Table 6-35. PTGDS Register Field Descriptions

Field	Description
6:0 PTGDS[6:0]	**Output Drive Strength Selection for Port G Bits** — Each of these control bits selects between low and high output drive for the associated PTG pin. 0 Low output drive enabled for port G bit n. 1 High output drive enabled for port G bit n.

Chapter 7
Central Processor Unit (S08CPUV2)

7.1 Introduction

This section provides summary information about the registers, addressing modes, and instruction set of the CPU of the HCS08 Family. For a more detailed discussion, refer to the *HCS08 Family Reference Manual, volume 1*.

The HCS08 CPU is fully source- and object-code-compatible with the M68HC08 CPU. Several instructions and enhanced addressing modes were added to improve C compiler efficiency and to support a new background debug system which replaces the monitor mode of earlier M68HC08 microcontrollers (MCU).

7.1.1 Features

Features of the HCS08 CPU include:

- Object code fully upward-compatible with M68HC05 and M68HC08 Families
- All registers and memory are mapped to a single 64-Kbyte address space
- 16-bit stack pointer (any size stack anywhere in 64-Kbyte address space)
- 16-bit index register (H:X) with powerful indexed addressing modes
- 8-bit accumulator (A)
- Many instructions treat X as a second general-purpose 8-bit register
- Seven addressing modes:
  - Inherent — Operands in internal registers
  - Relative — 8-bit signed offset to branch destination
  - Immediate — Operand in next object code byte(s)
  - Direct — Operand in memory at 0x0000–0x00FF
  - Extended — Operand anywhere in 64-Kbyte address space
  - Indexed relative to H:X — Five submodes including auto increment
  - Indexed relative to SP — Improves C efficiency dramatically
- Memory-to-memory data move instructions with four address mode combinations
- Overflow, half-carry, negative, zero, and carry condition codes support conditional branching on the results of signed, unsigned, and binary-coded decimal (BCD) operations
- Efficient bit manipulation instructions
- Fast 8-bit by 8-bit multiply and 16-bit by 8-bit divide instructions
- STOP and WAIT instructions to invoke low-power operating modes

7.2 Programmer's Model and CPU Registers

Figure 7-1 shows the five CPU registers. CPU registers are not part of the memory map.

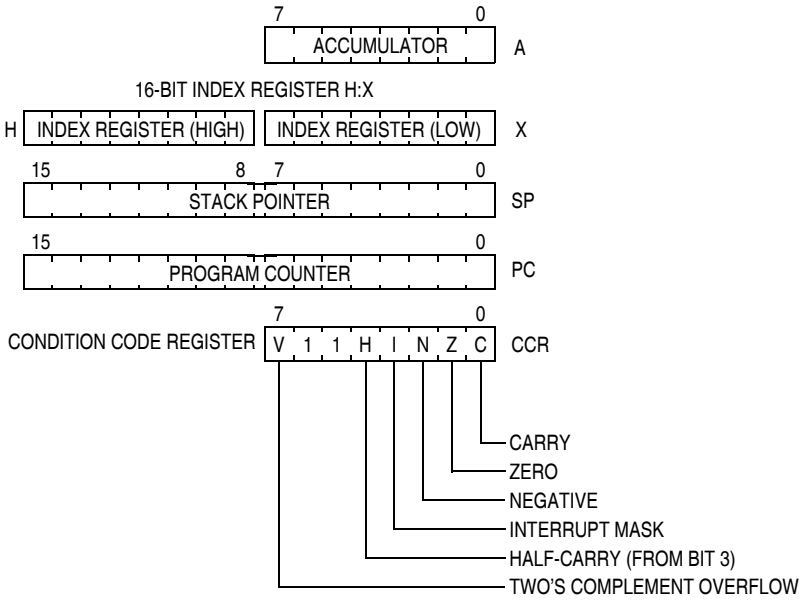

Figure 7-1. CPU Registers

7.2.1 Accumulator (A)

The A accumulator is a general-purpose 8-bit register. One operand input to the arithmetic logic unit (ALU) is connected to the accumulator and the ALU results are often stored into the A accumulator after arithmetic and logical operations. The accumulator can be loaded from memory using various addressing modes to specify the address where the loaded data comes from, or the contents of A can be stored to memory using various addressing modes to specify the address where data from A will be stored.

Reset has no effect on the contents of the A accumulator.

7.2.2 Index Register (H:X)

This 16-bit register is actually two separate 8-bit registers (H and X), which often work together as a 16-bit address pointer where H holds the upper byte of an address and X holds the lower byte of the address. All indexed addressing mode instructions use the full 16-bit value in H:X as an index reference pointer; however, for compatibility with the earlier M68HC05 Family, some instructions operate only on the low-order 8-bit half (X).

Many instructions treat X as a second general-purpose 8-bit register that can be used to hold 8-bit data values. X can be cleared, incremented, decremented, complemented, negated, shifted, or rotated. Transfer instructions allow data to be transferred from A or transferred to A where arithmetic and logical operations can then be performed.

For compatibility with the earlier M68HC05 Family, H is forced to 0x00 during reset. Reset has no effect on the contents of X.

7.2.3 Stack Pointer (SP)

This 16-bit address pointer register points at the next available location on the automatic last-in-first-out (LIFO) stack. The stack may be located anywhere in the 64-Kbyte address space that has RAM and can be any size up to the amount of available RAM. The stack is used to automatically save the return address for subroutine calls, the return address and CPU registers during interrupts, and for local variables. The AIS (add immediate to stack pointer) instruction adds an 8-bit signed immediate value to SP. This is most often used to allocate or deallocate space for local variables on the stack.

SP is forced to 0x00FF at reset for compatibility with the earlier M68HC05 Family. HCS08 programs normally change the value in SP to the address of the last location (highest address) in on-chip RAM during reset initialization to free up direct page RAM (from the end of the on-chip registers to 0x00FF).

The RSP (reset stack pointer) instruction was included for compatibility with the M68HC05 Family and is seldom used in new HCS08 programs because it only affects the low-order half of the stack pointer.

7.2.4 Program Counter (PC)

The program counter is a 16-bit register that contains the address of the next instruction or operand to be fetched.

During normal program execution, the program counter automatically increments to the next sequential memory location every time an instruction or operand is fetched. Jump, branch, interrupt, and return operations load the program counter with an address other than that of the next sequential location. This is called a change-of-flow.

During reset, the program counter is loaded with the reset vector that is located at 0xFFFE and 0xFFFF. The vector stored there is the address of the first instruction that will be executed after exiting the reset state.

7.2.5 Condition Code Register (CCR)

The 8-bit condition code register contains the interrupt mask (I) and five flags that indicate the results of the instruction just executed. Bits 6 and 5 are set permanently to 1. The following paragraphs describe the functions of the condition code bits in general terms. For a more detailed explanation of how each instruction sets the CCR bits, refer to the *HCS08 Family Reference Manual, volume 1*.

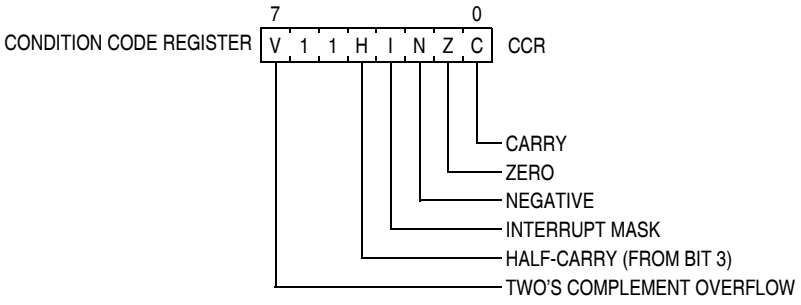

Figure 7-2. Condition Code Register

Table 7-1. CCR Register Field Descriptions

Field	Description
7 V	**Two's Complement Overflow Flag** — The CPU sets the overflow flag when a two's complement overflow occurs. The signed branch instructions BGT, BGE, BLE, and BLT use the overflow flag. 0 No overflow 1 Overflow
4 H	**Half-Carry Flag** — The CPU sets the half-carry flag when a carry occurs between accumulator bits 3 and 4 during an add-without-carry (ADD) or add-with-carry (ADC) operation. The half-carry flag is required for binary-coded decimal (BCD) arithmetic operations. The DAA instruction uses the states of the H and C condition code bits to automatically add a correction value to the result from a previous ADD or ADC on BCD operands to correct the result to a valid BCD value. 0 No carry between bits 3 and 4 1 Carry between bits 3 and 4
3 I	**Interrupt Mask Bit** — When the interrupt mask is set, all maskable CPU interrupts are disabled. CPU interrupts are enabled when the interrupt mask is cleared. When a CPU interrupt occurs, the interrupt mask is set automatically after the CPU registers are saved on the stack, but before the first instruction of the interrupt service routine is executed. Interrupts are not recognized at the instruction boundary after any instruction that clears I (CLI or TAP). This ensures that the next instruction after a CLI or TAP will always be executed without the possibility of an intervening interrupt, provided I was set. 0 Interrupts enabled 1 Interrupts disabled
2 N	**Negative Flag** — The CPU sets the negative flag when an arithmetic operation, logic operation, or data manipulation produces a negative result, setting bit 7 of the result. Simply loading or storing an 8-bit or 16-bit value causes N to be set if the most significant bit of the loaded or stored value was 1. 0 Non-negative result 1 Negative result
1 Z	**Zero Flag** — The CPU sets the zero flag when an arithmetic operation, logic operation, or data manipulation produces a result of 0x00 or 0x0000. Simply loading or storing an 8-bit or 16-bit value causes Z to be set if the loaded or stored value was all 0s. 0 Non-zero result 1 Zero result
0 C	**Carry/Borrow Flag** — The CPU sets the carry/borrow flag when an addition operation produces a carry out of bit 7 of the accumulator or when a subtraction operation requires a borrow. Some instructions — such as bit test and branch, shift, and rotate — also clear or set the carry/borrow flag. 0 No carry out of bit 7 1 Carry out of bit 7

7.3 Addressing Modes

Addressing modes define the way the CPU accesses operands and data. In the HCS08, all memory, status and control registers, and input/output (I/O) ports share a single 64-Kbyte linear address space so a 16-bit binary address can uniquely identify any memory location. This arrangement means that the same instructions that access variables in RAM can also be used to access I/O and control registers or nonvolatile program space.

Some instructions use more than one addressing mode. For instance, move instructions use one addressing mode to specify the source operand and a second addressing mode to specify the destination address. Instructions such as BRCLR, BRSET, CBEQ, and DBNZ use one addressing mode to specify the location

of an operand for a test and then use relative addressing mode to specify the branch destination address when the tested condition is true. For BRCLR, BRSET, CBEQ, and DBNZ, the addressing mode listed in the instruction set tables is the addressing mode needed to access the operand to be tested, and relative addressing mode is implied for the branch destination.

7.3.1 Inherent Addressing Mode (INH)

In this addressing mode, operands needed to complete the instruction (if any) are located within CPU registers so the CPU does not need to access memory to get any operands.

7.3.2 Relative Addressing Mode (REL)

Relative addressing mode is used to specify the destination location for branch instructions. A signed 8-bit offset value is located in the memory location immediately following the opcode. During execution, if the branch condition is true, the signed offset is sign-extended to a 16-bit value and is added to the current contents of the program counter, which causes program execution to continue at the branch destination address.

7.3.3 Immediate Addressing Mode (IMM)

In immediate addressing mode, the operand needed to complete the instruction is included in the object code immediately following the instruction opcode in memory. In the case of a 16-bit immediate operand, the high-order byte is located in the next memory location after the opcode, and the low-order byte is located in the next memory location after that.

7.3.4 Direct Addressing Mode (DIR)

In direct addressing mode, the instruction includes the low-order eight bits of an address in the direct page (0x0000–0x00FF). During execution a 16-bit address is formed by concatenating an implied 0x00 for the high-order half of the address and the direct address from the instruction to get the 16-bit address where the desired operand is located. This is faster and more memory efficient than specifying a complete 16-bit address for the operand.

7.3.5 Extended Addressing Mode (EXT)

In extended addressing mode, the full 16-bit address of the operand is located in the next two bytes of program memory after the opcode (high byte first).

7.3.6 Indexed Addressing Mode

Indexed addressing mode has seven variations including five that use the 16-bit H:X index register pair and two that use the stack pointer as the base reference.

7.3.6.1 Indexed, No Offset (IX)

This variation of indexed addressing uses the 16-bit value in the H:X index register pair as the address of the operand needed to complete the instruction.

7.3.6.2 Indexed, No Offset with Post Increment (IX+)

This variation of indexed addressing uses the 16-bit value in the H:X index register pair as the address of the operand needed to complete the instruction. The index register pair is then incremented (H:X = H:X + 0x0001) after the operand has been fetched. This addressing mode is only used for MOV and CBEQ instructions.

7.3.6.3 Indexed, 8-Bit Offset (IX1)

This variation of indexed addressing uses the 16-bit value in the H:X index register pair plus an unsigned 8-bit offset included in the instruction as the address of the operand needed to complete the instruction.

7.3.6.4 Indexed, 8-Bit Offset with Post Increment (IX1+)

This variation of indexed addressing uses the 16-bit value in the H:X index register pair plus an unsigned 8-bit offset included in the instruction as the address of the operand needed to complete the instruction. The index register pair is then incremented (H:X = H:X + 0x0001) after the operand has been fetched. This addressing mode is used only for the CBEQ instruction.

7.3.6.5 Indexed, 16-Bit Offset (IX2)

This variation of indexed addressing uses the 16-bit value in the H:X index register pair plus a 16-bit offset included in the instruction as the address of the operand needed to complete the instruction.

7.3.6.6 SP-Relative, 8-Bit Offset (SP1)

This variation of indexed addressing uses the 16-bit value in the stack pointer (SP) plus an unsigned 8-bit offset included in the instruction as the address of the operand needed to complete the instruction.

7.3.6.7 SP-Relative, 16-Bit Offset (SP2)

This variation of indexed addressing uses the 16-bit value in the stack pointer (SP) plus a 16-bit offset included in the instruction as the address of the operand needed to complete the instruction.

7.4 Special Operations

The CPU performs a few special operations that are similar to instructions but do not have opcodes like other CPU instructions. In addition, a few instructions such as STOP and WAIT directly affect other MCU circuitry. This section provides additional information about these operations.

7.4.1 Reset Sequence

Reset can be caused by a power-on-reset (POR) event, internal conditions such as the COP (computer operating properly) watchdog, or by assertion of an external active-low reset pin. When a reset event occurs, the CPU immediately stops whatever it is doing (the MCU does not wait for an instruction boundary before responding to a reset event). For a more detailed discussion about how the MCU recognizes resets and determines the source, refer to the Resets, Interrupts, and System Configuration chapter.

The reset event is considered concluded when the sequence to determine whether the reset came from an internal source is done and when the reset pin is no longer asserted. At the conclusion of a reset event, the CPU performs a 6-cycle sequence to fetch the reset vector from 0xFFFE and 0xFFFF and to fill the instruction queue in preparation for execution of the first program instruction.

7.4.2 Interrupt Sequence

When an interrupt is requested, the CPU completes the current instruction before responding to the interrupt. At this point, the program counter is pointing at the start of the next instruction, which is where the CPU should return after servicing the interrupt. The CPU responds to an interrupt by performing the same sequence of operations as for a software interrupt (SWI) instruction, except the address used for the vector fetch is determined by the highest priority interrupt that is pending when the interrupt sequence started.

The CPU sequence for an interrupt is:

1. Store the contents of PCL, PCH, X, A, and CCR on the stack, in that order.
2. Set the I bit in the CCR.
3. Fetch the high-order half of the interrupt vector.
4. Fetch the low-order half of the interrupt vector.
5. Delay for one free bus cycle.
6. Fetch three bytes of program information starting at the address indicated by the interrupt vector to fill the instruction queue in preparation for execution of the first instruction in the interrupt service routine.

After the CCR contents are pushed onto the stack, the I bit in the CCR is set to prevent other interrupts while in the interrupt service routine. Although it is possible to clear the I bit with an instruction in the interrupt service routine, this would allow nesting of interrupts (which is not recommended because it leads to programs that are difficult to debug and maintain).

For compatibility with the earlier M68HC05 MCUs, the high-order half of the H:X index register pair (H) is not saved on the stack as part of the interrupt sequence. The user must use a PSHH instruction at the beginning of the service routine to save H and then use a PULH instruction just before the RTI that ends the interrupt service routine. It is not necessary to save H if you are certain that the interrupt service routine does not use any instructions or auto-increment addressing modes that might change the value of H.

The software interrupt (SWI) instruction is like a hardware interrupt except that it is not masked by the global I bit in the CCR and it is associated with an instruction opcode within the program so it is not asynchronous to program execution.

7.4.3 Wait Mode Operation

The WAIT instruction enables interrupts by clearing the I bit in the CCR. It then halts the clocks to the CPU to reduce overall power consumption while the CPU is waiting for the interrupt or reset event that will wake the CPU from wait mode. When an interrupt or reset event occurs, the CPU clocks will resume and the interrupt or reset event will be processed normally.

If a serial BACKGROUND command is issued to the MCU through the background debug interface while the CPU is in wait mode, CPU clocks will resume and the CPU will enter active background mode where other serial background commands can be processed. This ensures that a host development system can still gain access to a target MCU even if it is in wait mode.

7.4.4 Stop Mode Operation

Usually, all system clocks, including the crystal oscillator (when used), are halted during stop mode to minimize power consumption. In such systems, external circuitry is needed to control the time spent in stop mode and to issue a signal to wake up the target MCU when it is time to resume processing. Unlike the earlier M68HC05 and M68HC08 MCUs, the HCS08 can be configured to keep a minimum set of clocks running in stop mode. This optionally allows an internal periodic signal to wake the target MCU from stop mode.

When a host debug system is connected to the background debug pin (BKGD) and the ENBDM control bit has been set by a serial command through the background interface (or because the MCU was reset into active background mode), the oscillator is forced to remain active when the MCU enters stop mode. In this case, if a serial BACKGROUND command is issued to the MCU through the background debug interface while the CPU is in stop mode, CPU clocks will resume and the CPU will enter active background mode where other serial background commands can be processed. This ensures that a host development system can still gain access to a target MCU even if it is in stop mode.

Recovery from stop mode depends on the particular HCS08 and whether the oscillator was stopped in stop mode. Refer to the Modes of Operation chapter for more details.

7.4.5 BGND Instruction

The BGND instruction is new to the HCS08 compared to the M68HC08. BGND would not be used in normal user programs because it forces the CPU to stop processing user instructions and enter the active background mode. The only way to resume execution of the user program is through reset or by a host debug system issuing a GO, TRACE1, or TAGGO serial command through the background debug interface.

Software-based breakpoints can be set by replacing an opcode at the desired breakpoint address with the BGND opcode. When the program reaches this breakpoint address, the CPU is forced to active background mode rather than continuing the user program.

7.5 HCS08 Instruction Set Summary

Table 7-2 provides a summary of the HCS08 instruction set in all possible addressing modes. The table shows operand construction, execution time in internal bus clock cycles, and cycle-by-cycle details for each addressing mode variation of each instruction.

Table 7-2. . Instruction Set Summary (Sheet 1 of 9)

Source Form	Operation	Address Mode	Object Code	Cycles	Cyc-by-Cyc Details	Affect on CCR V 1 1 H	Affect on CCR I N Z C
ADC #*opr8i* ADC *opr8a* ADC *opr16a* ADC *oprx16*,X ADC *oprx8*,X ADC ,X ADC *oprx16*,SP ADC *oprx8*,SP	Add with Carry A ← (A) + (M) + (C)	IMM DIR EXT IX2 IX1 IX SP2 SP1	A9 ii B9 dd C9 hh ll D9 ee ff E9 ff F9 9E D9 ee ff 9E E9 ff	2 3 4 4 3 3 5 4	pp rpp prpp prpp rpp rfp pprpp prpp	↕ 1 1 ↕	– ↕ ↕ ↕

ADD #*opr8i*
ADD *opr8a*
ADD *opr16a*
ADD *oprx16*,X
ADD *oprx8*,X
ADD ,X
ADD *oprx16*,SP
ADD *oprx8*,SP
	Add without Carry
	A ← (A) + (M)
		IMM
		DIR
		EXT
		IX2
		IX1
		IX
		SP2
		SP1
			AB ii
			BB dd
			CB hh ll
			DB ee ff
			EB ff
			FB
			9E DB ee ff
			9E EB ff
				2
				3
				4
				4
				3
				3
				5
				4
					pp
					rpp
					prpp
					prpp
					rpp
					rfp
					pprpp
					prpp
						↕ 1 1 ↕	– ↕ ↕ ↕

AIS #*opr8i*	Add Immediate Value (Signed) to Stack Pointer SP ← (SP) + (M)	IMM	A7 ii	2	pp	– 1 1 –	– – – –
AIX #*opr8i*	Add Immediate Value (Signed) to Index Register (H:X) H:X ← (H:X) + (M)	IMM	AF ii	2	pp	– 1 1 –	– – – –
AND #*opr8i* AND *opr8a* AND *opr16a* AND *oprx16*,X AND *oprx8*,X AND ,X AND *oprx16*,SP AND *oprx8*,SP	Logical AND A ← (A) & (M)	IMM DIR EXT IX2 IX1 IX SP2 SP1	A4 ii B4 dd C4 hh ll D4 ee ff E4 ff F4 9E D4 ee ff 9E E4 ff	2 3 4 4 3 3 5 4	pp rpp prpp prpp rpp rfp pprpp prpp	0 1 1 –	– ↕ ↕ –
ASL *opr8a* ASLA ASLX ASL *oprx8*,X ASL ,X ASL *oprx8*,SP	Arithmetic Shift Left 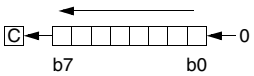 (Same as LSL)	DIR INH INH IX1 IX SP1	38 dd 48 58 68 ff 78 9E 68 ff	5 1 1 5 4 6	rfwpp p p rfwpp rfwp prfwpp	↕ 1 1 –	– ↕ ↕ ↕
ASR *opr8a* ASRA ASRX ASR *oprx8*,X ASR ,X ASR *oprx8*,SP	Arithmetic Shift Right 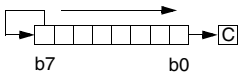 	DIR INH INH IX1 IX SP1	37 dd 47 57 67 ff 77 9E 67 ff	5 1 1 5 4 6	rfwpp p p rfwpp rfwp prfwpp	↕ 1 1 –	– ↕ ↕ ↕

Table 7-2. . Instruction Set Summary (Sheet 2 of 9)

Source Form	Operation	Address Mode	Object Code	Cycles	Cyc-by-Cyc Details	Affect on CCR	
						V 1 1 H	I N Z C
BCC *rel*	Branch if Carry Bit Clear (if C = 0)	REL	24 rr	3	ppp	– 1 1 –	– – – –
BCLR *n,opr8a*	Clear Bit n in Memory (Mn ← 0)	DIR (b0) DIR (b1) DIR (b2) DIR (b3) DIR (b4) DIR (b5) DIR (b6) DIR (b7)	11 dd 13 dd 15 dd 17 dd 19 dd 1B dd 1D dd 1F dd	5 5 5 5 5 5 5 5	rfwpp rfwpp rfwpp rfwpp rfwpp rfwpp rfwpp rfwpp	– 1 1 –	– – – –
BCS *rel*	Branch if Carry Bit Set (if C = 1) (Same as BLO)	REL	25 rr	3	ppp	– 1 1 –	– – – –
BEQ *rel*	Branch if Equal (if Z = 1)	REL	27 rr	3	ppp	– 1 1 –	– – – –
BGE *rel*	Branch if Greater Than or Equal To (if N ⊕ V = 0) (Signed)	REL	90 rr	3	ppp	– 1 1 –	– – – –
BGND	Enter active background if ENBDM=1 Waits for and processes BDM commands until GO, TRACE1, or TAGGO	INH	82	5+	fp...ppp	– 1 1 –	– – – –
BGT *rel*	Branch if Greater Than (if Z | (N ⊕ V) = 0) (Signed)	REL	92 rr	3	ppp	– 1 1 –	– – – –
BHCC *rel*	Branch if Half Carry Bit Clear (if H = 0)	REL	28 rr	3	ppp	– 1 1 –	– – – –
BHCS *rel*	Branch if Half Carry Bit Set (if H = 1)	REL	29 rr	3	ppp	– 1 1 –	– – – –
BHI *rel*	Branch if Higher (if C | Z = 0)	REL	22 rr	3	ppp	– 1 1 –	– – – –
BHS *rel*	Branch if Higher or Same (if C = 0) (Same as BCC)	REL	24 rr	3	ppp	– 1 1 –	– – – –
BIH *rel*	Branch if IRQ Pin High (if IRQ pin = 1)	REL	2F rr	3	ppp	– 1 1 –	– – – –
BIL *rel*	Branch if IRQ Pin Low (if IRQ pin = 0)	REL	2E rr	3	ppp	– 1 1 –	– – – –
BIT #*opr8i* BIT *opr8a* BIT *opr16a* BIT *oprx16*,X BIT *oprx8*,X BIT ,X BIT *oprx16*,SP BIT *oprx8*,SP	Bit Test (A) & (M) (CCR Updated but Operands Not Changed)	IMM DIR EXT IX2 IX1 IX SP2 SP1	A5 ii B5 dd C5 hh ll D5 ee ff E5 ff F5 9E D5 ee ff 9E E5 ff	2 3 4 4 3 3 5 4	pp rpp prpp prpp rpp rfp pprpp prpp	0 1 1 –	– ↕ ↕ –
BLE *rel*	Branch if Less Than or Equal To (if Z | (N ⊕ V) = 1) (Signed)	REL	93 rr	3	ppp	– 1 1 –	– – – –
BLO *rel*	Branch if Lower (if C = 1) (Same as BCS)	REL	25 rr	3	ppp	– 1 1 –	– – – –
BLS *rel*	Branch if Lower or Same (if C | Z = 1)	REL	23 rr	3	ppp	– 1 1 –	– – – –
BLT *rel*	Branch if Less Than (if N ⊕ V = 1) (Signed)	REL	91 rr	3	ppp	– 1 1 –	– – – –
BMC *rel*	Branch if Interrupt Mask Clear (if I = 0)	REL	2C rr	3	ppp	– 1 1 –	– – – –
BMI *rel*	Branch if Minus (if N = 1)	REL	2B rr	3	ppp	– 1 1 –	– – – –
BMS *rel*	Branch if Interrupt Mask Set (if I = 1)	REL	2D rr	3	ppp	– 1 1 –	– – – –
BNE *rel*	Branch if Not Equal (if Z = 0)	REL	26 rr	3	ppp	– 1 1 –	– – – –

Table 7-2. . Instruction Set Summary (Sheet 3 of 9)

Source Form	Operation	Address Mode	Object Code	Cycles	Cyc-by-Cyc Details	Affect on CCR V 1 1 H	Affect on CCR I N Z C
BPL *rel*	Branch if Plus (if N = 0)	REL	2A rr	3	ppp	– 1 1 –	– – – –
BRA *rel*	Branch Always (if I = 1)	REL	20 rr	3	ppp	– 1 1 –	– – – –
BRCLR *n,opr8a,rel*	Branch if Bit *n* in Memory Clear (if (Mn) = 0)	DIR (b0) DIR (b1) DIR (b2) DIR (b3) DIR (b4) DIR (b5) DIR (b6) DIR (b7)	01 dd rr 03 dd rr 05 dd rr 07 dd rr 09 dd rr 0B dd rr 0D dd rr 0F dd rr	5 5 5 5 5 5 5 5	rpppp rpppp rpppp rpppp rpppp rpppp rpppp rpppp	– 1 1 –	– – – ↕
BRN *rel*	Branch Never (if I = 0)	REL	21 rr	3	ppp	– 1 1 –	– – – –
BRSET *n,opr8a,rel*	Branch if Bit *n* in Memory Set (if (Mn) = 1)	DIR (b0) DIR (b1) DIR (b2) DIR (b3) DIR (b4) DIR (b5) DIR (b6) DIR (b7)	00 dd rr 02 dd rr 04 dd rr 06 dd rr 08 dd rr 0A dd rr 0C dd rr 0E dd rr	5 5 5 5 5 5 5 5	rpppp rpppp rpppp rpppp rpppp rpppp rpppp rpppp	– 1 1 –	– – – ↕
BSET *n,opr8a*	Set Bit *n* in Memory (Mn ← 1)	DIR (b0) DIR (b1) DIR (b2) DIR (b3) DIR (b4) DIR (b5) DIR (b6) DIR (b7)	10 dd 12 dd 14 dd 16 dd 18 dd 1A dd 1C dd 1E dd	5 5 5 5 5 5 5 5	rfwpp rfwpp rfwpp rfwpp rfwpp rfwpp rfwpp rfwpp	– 1 1 –	– – – –
BSR *rel*	Branch to Subroutine PC ← (PC) + $0002 push (PCL); SP ← (SP) – $0001 push (PCH); SP ← (SP) – $0001 PC ← (PC) + *rel*	REL	AD rr	5	ssppp	– 1 1 –	– – – –
CBEQ *opr8a,rel* CBEQA #*opr8i,rel* CBEQX #*opr8i,rel* CBEQ *oprx8*,X+,*rel* CBEQ ,X+,*rel* CBEQ *oprx8*,SP,*rel*	Compare and... Branch if (A) = (M) Branch if (A) = (M) Branch if (X) = (M) Branch if (A) = (M) Branch if (A) = (M) Branch if (A) = (M)	DIR IMM IMM IX1+ IX+ SP1	31 dd rr 41 ii rr 51 ii rr 61 ff rr 71 rr 9E 61 ff rr	5 4 4 5 5 6	rpppp pppp pppp rpppp rfppp prpppp	– 1 1 –	– – – –
CLC	Clear Carry Bit (C ← 0)	INH	98	1	p	– 1 1 –	– – – 0
CLI	Clear Interrupt Mask Bit (I ← 0)	INH	9A	1	p	– 1 1 –	0 – – –
CLR *opr8a* CLRA CLRX CLRH CLR *oprx8*,X CLR ,X CLR *oprx8*,SP	Clear M ← $00 A ← $00 X ← $00 H ← $00 M ← $00 M ← $00 M ← $00	DIR INH INH INH IX1 IX SP1	3F dd 4F 5F 8C 6F ff 7F 9E 6F ff	5 1 1 1 5 4 6	rfwpp p p p rfwpp rfwp prfwpp	0 1 1 –	– 0 1 –

Table 7-2. . Instruction Set Summary (Sheet 4 of 9)

Source Form	Operation	Address Mode	Object Code	Cycles	Cyc-by-Cyc Details	Affect on CCR V 1 1 H	Affect on CCR I N Z C

CMP #*opr8i*
CMP *opr8a*
CMP *opr16a*
CMP *oprx16*,X
CMP *oprx8*,X
CMP ,X
CMP *oprx16*,SP
CMP *oprx8*,SP
	Compare Accumulator with Memory
	A – M
	(CCR Updated But Operands Not Changed)
		IMM
		DIR
		EXT
		IX2
		IX1
		IX
		SP2
		SP1
			A1 ii
			B1 dd
			C1 hh ll
			D1 ee ff
			E1 ff
			F1
			9E D1 ee ff
			9E E1 ff
				2
				3
				4
				4
				3
				3
				5
				4
					pp
					rpp
					prpp
					prpp
					rpp
					rfp
					pprpp
					prpp
						↕ 1 1 –	– ↕ ↕ ↕

COM *opr8a* COMA COMX COM *oprx8*,X COM ,X COM *oprx8*,SP	Complement (One's Complement) M ← ($\overline{M}$)= $FF – (M) A ← ($\overline{A}$) = $FF – (A) X ← ($\overline{X}$) = $FF – (X) M ← ($\overline{M}$) = $FF – (M) M ← ($\overline{M}$) = $FF – (M) M ← ($\overline{M}$) = $FF – (M)	DIR INH INH IX1 IX SP1	33 dd 43 53 63 ff 73 9E 63 ff	5 1 1 5 4 6	rfwpp p p rfwpp rfwp prfwpp	0 1 1 –	– ↕ ↕ 1
CPHX *opr16a* CPHX #*opr16i* CPHX *opr8a* CPHX *oprx8*,SP	Compare Index Register (H:X) with Memory (H:X) – (M:M + $0001) (CCR Updated But Operands Not Changed)	EXT IMM DIR SP1	3E hh ll 65 jj kk 75 dd 9E F3 ff	6 3 5 6	prrfpp ppp rrfpp prrfpp	↕ 1 1 –	– ↕ ↕ ↕
CPX #*opr8i* CPX *opr8a* CPX *opr16a* CPX *oprx16*,X CPX *oprx8*,X CPX ,X CPX *oprx16*,SP CPX *oprx8*,SP	Compare X (Index Register Low) with Memory X – M (CCR Updated But Operands Not Changed)	IMM DIR EXT IX2 IX1 IX SP2 SP1	A3 ii B3 dd C3 hh ll D3 ee ff E3 ff F3 9E D3 ee ff 9E E3 ff	2 3 4 4 3 3 5 4	pp rpp prpp prpp rpp rfp pprpp prpp	↕ 1 1 –	– ↕ ↕ ↕
DAA	Decimal Adjust Accumulator After ADD or ADC of BCD Values	INH	72	1	p	U 1 1 –	– ↕ ↕ ↕
DBNZ *opr8a*,*rel* DBNZA *rel* DBNZX *rel* DBNZ *oprx8*,X,*rel* DBNZ ,X,*rel* DBNZ *oprx8*,SP,*rel*	Decrement A, X, or M and Branch if Not Zero (if (result) ≠ 0) DBNZX Affects X Not H	DIR INH INH IX1 IX SP1	3B dd rr 4B rr 5B rr 6B ff rr 7B rr 9E 6B ff rr	7 4 4 7 6 8	rfwpppp fppp fppp rfwpppp rfwppp prfwpppp	– 1 1 –	– – – –
DEC *opr8a* DECA DECX DEC *oprx8*,X DEC ,X DEC *oprx8*,SP	Decrement M ← (M) – $01 A ← (A) – $01 X ← (X) – $01 M ← (M) – $01 M ← (M) – $01 M ← (M) – $01	DIR INH INH IX1 IX SP1	3A dd 4A 5A 6A ff 7A 9E 6A ff	5 1 1 5 4 6	rfwpp p p rfwpp rfwp prfwpp	↕ 1 1 –	– ↕ ↕ –
DIV	Divide A ← (H:A)÷(X); H ← Remainder	INH	52	6	fffffp	– 1 1 –	– – ↕ ↕
EOR #*opr8i* EOR *opr8a* EOR *opr16a* EOR *oprx16*,X EOR *oprx8*,X EOR ,X EOR *oprx16*,SP EOR *oprx8*,SP	Exclusive OR Memory with Accumulator A ← (A ⊕ M)	IMM DIR EXT IX2 IX1 IX SP2 SP1	A8 ii B8 dd C8 hh ll D8 ee ff E8 ff F8 9E D8 ee ff 9E E8 ff	2 3 4 4 3 3 5 4	pp rpp prpp prpp rpp rfp pprpp prpp	0 1 1 –	– ↕ ↕ –

Table 7-2. . Instruction Set Summary (Sheet 5 of 9)

Source Form	Operation	Address Mode	Object Code	Cycles	Cyc-by-Cyc Details	Affect on CCR V 1 1 H	Affect on CCR I N Z C
INC *opr8a* INCA INCX INC *oprx8*,X INC ,X INC *oprx8*,SP	Increment M ← (M) + $01 A ← (A) + $01 X ← (X) + $01 M ← (M) + $01 M ← (M) + $01 M ← (M) + $01	DIR INH INH IX1 IX SP1	3C dd 4C 5C 6C ff 7C 9E 6C ff	5 1 1 5 4 6	rfwpp p p rfwpp rfwp prfwpp	↕1 1 –	–↕↕–
JMP *opr8a* JMP *opr16a* JMP *oprx16*,X JMP *oprx8*,X JMP ,X	Jump PC ← Jump Address	DIR EXT IX2 IX1 IX	BC dd CC hh ll DC ee ff EC ff FC	3 4 4 3 3	ppp pppp pppp ppp ppp	– 1 1 –	– – – –
JSR *opr8a* JSR *opr16a* JSR *oprx16*,X JSR *oprx8*,X JSR ,X	Jump to Subroutine PC ← (PC) + *n* (*n* = 1, 2, or 3) Push (PCL); SP ← (SP) – $0001 Push (PCH); SP ← (SP) – $0001 PC ← Unconditional Address	DIR EXT IX2 IX1 IX	BD dd CD hh ll DD ee ff ED ff FD	5 6 6 5 5	ssppp pssppp pssppp ssppp ssppp	– 1 1 –	– – – –

LDA #*opr8i*
LDA *opr8a*
LDA *opr16a*
LDA *oprx16*,X
LDA *oprx8*,X
LDA ,X
LDA *oprx16*,SP
LDA *oprx8*,SP
	Load Accumulator from Memory
	A ← (M)
		IMM
		DIR
		EXT
		IX2
		IX1
		IX
		SP2
		SP1
			A6 ii
			B6 dd
			C6 hh ll
			D6 ee ff
			E6 ff
			F6
			9E D6 ee ff
			9E E6 ff
				2
				3
				4
				4
				3
				3
				5
				4
					pp
					rpp
					prpp
					prpp
					rpp
					rfp
					pprpp
					prpp
						0 1 1 –	–↕↕–

LDHX #*opr16i*
LDHX *opr8a*
LDHX *opr16a*
LDHX ,X
LDHX *oprx16*,X
LDHX *oprx8*,X
LDHX *oprx8*,SP
	Load Index Register (H:X)
	H:X ← (M:M + $0001)
		IMM
		DIR
		EXT
		IX
		IX2
		IX1
		SP1
			45 jj kk
			55 dd
			32 hh ll
			9E AE
			9E BE ee ff
			9E CE ff
			9E FE ff
				3
				4
				5
				5
				6
				5
				5
					ppp
					rrpp
					prrpp
					prrfp
					pprrpp
					prrpp
					prrpp
						0 1 1 –	–↕↕–

LDX #*opr8i*
LDX *opr8a*
LDX *opr16a*
LDX *oprx16*,X
LDX *oprx8*,X
LDX ,X
LDX *oprx16*,SP
LDX *oprx8*,SP
	Load X (Index Register Low) from Memory
	X ← (M)
		IMM
		DIR
		EXT
		IX2
		IX1
		IX
		SP2
		SP1
			AE ii
			BE dd
			CE hh ll
			DE ee ff
			EE ff
			FE
			9E DE ee ff
			9E EE ff
				2
				3
				4
				4
				3
				3
				5
				4
					pp
					rpp
					prpp
					prpp
					rpp
					rfp
					pprpp
					prpp
						0 1 1 –	–↕↕–

LSL *opr8a* LSLA LSLX LSL *oprx8*,X LSL ,X LSL *oprx8*,SP	Logical Shift Left 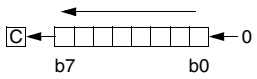 (Same as ASL)	DIR INH INH IX1 IX SP1	38 dd 48 58 68 ff 78 9E 68 ff	5 1 1 5 4 6	rfwpp p p rfwpp rfwp prfwpp	↕1 1 –	–↕↕↕
LSR *opr8a* LSRA LSR*X* LSR *oprx8*,X LSR ,X LSR *oprx8*,SP	Logical Shift Right 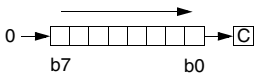 	DIR INH INH IX1 IX SP1	34 dd 44 54 64 ff 74 9E 64 ff	5 1 1 5 4 6	rfwpp p p rfwpp rfwp prfwpp	↕1 1 –	– 0↕↕

Table 7-2. . Instruction Set Summary (Sheet 6 of 9)

Source Form	Operation	Address Mode	Object Code	Cycles	Cyc-by-Cyc Details	Affect on CCR V 1 1 H	Affect on CCR I N Z C

MOV *opr8a*,*opr8a*
MOV *opr8a*,X+
MOV #*opr8i*,*opr8a*
MOV ,X+,*opr8a*
	Move
	$(M)_{destination} \leftarrow (M)_{source}$
	In IX+/DIR and DIR/IX+ Modes,
	H:X ← (H:X) + $0001
		DIR/DIR
		DIR/IX+
		IMM/DIR
		IX+/DIR
			4E dd dd
			5E dd
			6E ii dd
			7E dd
				5
				5
				4
				5
					rpwpp
					rfwpp
					pwpp
					rfwpp
						0 1 1 –	– ↕ ↕ –

MUL	Unsigned multiply X:A ← (X) × (A)	INH	42	5	ffffp	– 1 1 0	– – – 0
NEG *opr8a* NEGA NEGX NEG *oprx8*,X NEG ,X NEG *oprx8*,SP	Negate (Two's Complement) M ← – (M) = $00 – (M) A ← – (A) = $00 – (A) X ← – (X) = $00 – (X) M ← – (M) = $00 – (M) M ← – (M) = $00 – (M) M ← – (M) = $00 – (M)	DIR INH INH IX1 IX SP1	30 dd 40 50 60 ff 70 9E 60 ff	5 1 1 5 4 6	rfwpp p p rfwpp rfwp prfwpp	↕ 1 1 –	– ↕ ↕ ↕
NOP	No Operation — Uses 1 Bus Cycle	INH	9D	1	p	– 1 1 –	– – – –
NSA	Nibble Swap Accumulator A ← (A[3:0]:A[7:4])	INH	62	1	p	– 1 1 –	– – – –
ORA #*opr8i* ORA *opr8a* ORA *opr16a* ORA *oprx16*,X ORA *oprx8*,X ORA ,X ORA *oprx16*,SP ORA *oprx8*,SP	Inclusive OR Accumulator and Memory A ← (A) | (M)	IMM DIR EXT IX2 IX1 IX SP2 SP1	AA ii BA dd CA hh ll DA ee ff EA ff FA 9E DA ee ff 9E EA ff	2 3 4 4 3 3 5 4	pp rpp prpp prpp rpp rfp pprpp prpp	0 1 1 –	– ↕ ↕ –
PSHA	Push Accumulator onto Stack Push (A); SP ← (SP) – $0001	INH	87	2	sp	– 1 1 –	– – – –
PSHH	Push H (Index Register High) onto Stack Push (H); SP ← (SP) – $0001	INH	8B	2	sp	– 1 1 –	– – – –
PSHX	Push X (Index Register Low) onto Stack Push (X); SP ← (SP) – $0001	INH	89	2	sp	– 1 1 –	– – – –
PULA	Pull Accumulator from Stack SP ← (SP + $0001); Pull (A)	INH	86	3	ufp	– 1 1 –	– – – –
PULH	Pull H (Index Register High) from Stack SP ← (SP + $0001); Pull (H)	INH	8A	3	ufp	– 1 1 –	– – – –
PULX	Pull X (Index Register Low) from Stack SP ← (SP + $0001); Pull (X)	INH	88	3	ufp	– 1 1 –	– – – –
ROL *opr8a* ROLA ROLX ROL *oprx8*,X ROL ,X ROL *oprx8*,SP	Rotate Left through Carry 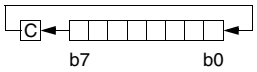	DIR INH INH IX1 IX SP1	39 dd 49 59 69 ff 79 9E 69 ff	5 1 1 5 4 6	rfwpp p p rfwpp rfwp prfwpp	↕ 1 1 –	– ↕ ↕ ↕
ROR *opr8a* RORA RORX ROR *oprx8*,X ROR ,X ROR *oprx8*,SP	Rotate Right through Carry 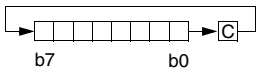	DIR INH INH IX1 IX SP1	36 dd 46 56 66 ff 76 9E 66 ff	5 1 1 5 4 6	rfwpp p p rfwpp rfwp prfwpp	↕ 1 1 –	– ↕ ↕ ↕

Table 7-2. . Instruction Set Summary (Sheet 7 of 9)

Source Form	Operation	Address Mode	Object Code	Cycles	Cyc-by-Cyc Details	Affect on CCR V 1 1 H	Affect on CCR I N Z C
RSP	Reset Stack Pointer (Low Byte) SPL ← $FF (High Byte Not Affected)	INH	9C	1	p	– 1 1 –	– – – –
RTI	Return from Interrupt SP ← (SP) + $0001; Pull (CCR) SP ← (SP) + $0001; Pull (A) SP ← (SP) + $0001; Pull (X) SP ← (SP) + $0001; Pull (PCH) SP ← (SP) + $0001; Pull (PCL)	INH	80	9	uuuuufppp	↕ 1 1 ↕	↕ ↕ ↕ ↕
RTS	Return from Subroutine SP ← SP + $0001; Pull (PCH) SP ← SP + $0001; Pull (PCL)	INH	81	5	ufppp	– 1 1 –	– – – –
SBC #*opr8i* SBC *opr8a* SBC *opr16a* SBC *oprx16*,X SBC *oprx8*,X SBC ,X SBC *oprx16*,SP SBC *oprx8*,SP	Subtract with Carry A ← (A) – (M) – (C)	IMM DIR EXT IX2 IX1 IX SP2 SP1	A2 ii B2 dd C2 hh ll D2 ee ff E2 ff F2 9E D2 ee ff 9E E2 ff	2 3 4 4 3 3 5 4	pp rpp prpp prpp rpp rfp pprpp prpp	↕ 1 1 –	– ↕ ↕ ↕
SEC	Set Carry Bit (C ← 1)	INH	99	1	p	– 1 1 –	– – – 1
SEI	Set Interrupt Mask Bit (I ← 1)	INH	9B	1	p	– 1 1 –	1 – – –
STA *opr8a* STA *opr16a* STA *oprx16*,X STA *oprx8*,X STA ,X STA *oprx16*,SP STA *oprx8*,SP	Store Accumulator in Memory M ← (A)	DIR EXT IX2 IX1 IX SP2 SP1	B7 dd C7 hh ll D7 ee ff E7 ff F7 9E D7 ee ff 9E E7 ff	3 4 4 3 2 5 4	wpp pwpp pwpp wpp wp ppwpp pwpp	0 1 1 –	– ↕ ↕ –
STHX *opr8a* STHX *opr16a* STHX *oprx8*,SP	Store H:X (Index Reg.) (M:M + $0001) ← (H:X)	DIR EXT SP1	35 dd 96 hh ll 9E FF ff	4 5 5	wwpp pwwpp pwwpp	0 1 1 –	– ↕ ↕ –
STOP	Enable Interrupts: Stop Processing Refer to MCU Documentation I bit ← 0; Stop Processing	INH	8E	2	fp...	– 1 1 –	0 – – –
STX *opr8a* STX *opr16a* STX *oprx16*,X STX *oprx8*,X STX ,X STX *oprx16*,SP STX *oprx8*,SP	Store X (Low 8 Bits of Index Register) in Memory M ← (X)	DIR EXT IX2 IX1 IX SP2 SP1	BF dd CF hh ll DF ee ff EF ff FF 9E DF ee ff 9E EF ff	3 4 4 3 2 5 4	wpp pwpp pwpp wpp wp ppwpp pwpp	0 1 1 –	– ↕ ↕ –

Table 7-2. . Instruction Set Summary (Sheet 8 of 9)

Source Form	Operation	Address Mode	Object Code	Cycles	Cyc-by-Cyc Details	Affect on CCR V 1 1 H	Affect on CCR I N Z C

SUB #*opr8i*
SUB *opr8a*
SUB *opr16a*
SUB *oprx16*,X
SUB *oprx8*,X
SUB ,X
SUB *oprx16*,SP
SUB *oprx8*,SP
	Subtract
	A ← (A) – (M)
		IMM
		DIR
		EXT
		IX2
		IX1
		IX
		SP2
		SP1
			A0 ii
			B0 dd
			C0 hh ll
			D0 ee ff
			E0 ff
			F0
			9E D0 ee ff
			9E E0 ff
				2
				3
				4
				4
				3
				3
				5
				4
					pp
					rpp
					prpp
					prpp
					rpp
					rfp
					pprpp
					prpp
						↕ 1 1 –	– ↕ ↕ ↕

SWI	Software Interrupt PC ← (PC) + $0001 Push (PCL); SP ← (SP) – $0001 Push (PCH); SP ← (SP) – $0001 Push (X); SP ← (SP) – $0001 Push (A); SP ← (SP) – $0001 Push (CCR); SP ← (SP) – $0001 I ← 1; PCH ← Interrupt Vector High Byte PCL ← Interrupt Vector Low Byte	INH	83	11	sssssvvfppp	– 1 1 –	1 – – –
TAP	Transfer Accumulator to CCR CCR ← (A)	INH	84	1	p	↕ 1 1 ↕	↕ ↕ ↕ ↕
TAX	Transfer Accumulator to X (Index Register Low) X ← (A)	INH	97	1	p	– 1 1 –	– – – –
TPA	Transfer CCR to Accumulator A ← (CCR)	INH	85	1	p	– 1 1 –	– – – –
TST *opr8a* TSTA TSTX TST *oprx8*,X TST ,X TST *oprx8*,SP	Test for Negative or Zero (M) – $00 (A) – $00 (X) – $00 (M) – $00 (M) – $00 (M) – $00	DIR INH INH IX1 IX SP1	3D dd 4D 5D 6D ff 7D 9E 6D ff	4 1 1 4 3 5	rfpp p p rfpp rfp prfpp	0 1 1 –	– ↕ ↕ –
TSX	Transfer SP to Index Reg. H:X ← (SP) + $0001	INH	95	2	fp	– 1 1 –	– – – –
TXA	Transfer X (Index Reg. Low) to Accumulator A ← (X)	INH	9F	1	p	– 1 1 –	– – – –

Table 7-2. . Instruction Set Summary (Sheet 9 of 9)

Source Form	Operation	Address Mode	Object Code	Cycles	Cyc-by-Cyc Details	Affect on CCR	
						V 1 1 H	I N Z C
TXS	Transfer Index Reg. to SP SP ← (H:X) – $0001	INH	94	2	fp	– 1 1 –	– – – –
WAIT	Enable Interrupts; Wait for Interrupt I bit ← 0; Halt CPU	INH	8F	2+	fp...	– 1 1 –	0 – – –

Source Form: Everything in the source forms columns, *except expressions in italic characters*, is literal information which must appear in the assembly source file exactly as shown. The initial 3- to 5-letter mnemonic and the characters (# , ( ) and +) are always a literal characters.

n	Any label or expression that evaluates to a single integer in the range 0-7.
opr8i	Any label or expression that evaluates to an 8-bit immediate value.
opr16i	Any label or expression that evaluates to a 16-bit immediate value.
opr8a	Any label or expression that evaluates to an 8-bit direct-page address ($00xx).
opr16a	Any label or expression that evaluates to a 16-bit address.
oprx8	Any label or expression that evaluates to an unsigned 8-bit value, used for indexed addressing.
oprx16	Any label or expression that evaluates to a 16-bit value, used for indexed addressing.
rel	Any label or expression that refers to an address that is within –128 to +127 locations from the start of the next instruction.

Operation Symbols:

A	Accumulator
CCR	Condition code register
H	Index register high byte
M	Memory location
n	Any bit
opr	Operand (one or two bytes)
PC	Program counter
PCH	Program counter high byte
PCL	Program counter low byte
rel	Relative program counter offset byte
SP	Stack pointer
SPL	Stack pointer low byte
X	Index register low byte
&	Logical AND
|	Logical OR
⊕	Logical EXCLUSIVE OR
( )	Contents of
+	Add
–	Subtract, Negation (two's complement)
×	Multiply
÷	Divide
#	Immediate value
←	Loaded with
:	Concatenated with

Addressing Modes:

DIR	Direct addressing mode
EXT	Extended addressing mode
IMM	Immediate addressing mode
INH	Inherent addressing mode
IX	Indexed, no offset addressing mode
IX1	Indexed, 8-bit offset addressing mode
IX2	Indexed, 16-bit offset addressing mode
IX+	Indexed, no offset, post increment addressing mode
IX1+	Indexed, 8-bit offset, post increment addressing mode
REL	Relative addressing mode
SP1	Stack pointer, 8-bit offset addressing mode
SP2	Stack pointer 16-bit offset addressing mode

Cycle-by-Cycle Codes:

f	Free cycle. This indicates a cycle where the CPU does not require use of the system buses. An f cycle is always one cycle of the system bus clock and is always a read cycle.
p	Progryam fetch; read from next consecutive location in program memory
r	Read 8-bit operand
s	Push (write) one byte onto stack
u	Pop (read) one byte from stack
v	Read vector from $FFxx (high byte first)
w	Write 8-bit operand

CCR Bits:

V	Overflow bit
H	Half-carry bit
I	Interrupt mask
N	Negative bit
Z	Zero bit
C	Carry/borrow bit

CCR Effects:

↕	Set or cleared
–	Not affected
U	Undefined

Table 7-3. Opcode Map (Sheet 1 of 2)

Bit-Manipulation		Branch	Read-Modify-Write					Control		Register/Memory					
00 5 BRSET0 3 DIR	10 5 BSET0 2 DIR	20 3 BRA 2 REL	30 5 NEG 2 DIR	40 1 NEGA 1 INH	50 1 NEGX 1 INH	60 5 NEG 2 IX1	70 4 NEG 1 IX	80 9 RTI 1 INH	90 3 BGE 2 REL	A0 2 SUB 2 IMM	B0 3 SUB 2 DIR	C0 4 SUB 3 EXT	D0 4 SUB 3 IX2	E0 3 SUB 2 IX1	F0 3 SUB 1 IX
01 5 BRCLR0 3 DIR	11 5 BCLR0 2 DIR	21 3 BRN 2 REL	31 5 CBEQ 3 DIR	41 4 CBEQA 3 IMM	51 4 CBEQX 3 IMM	61 5 CBEQ 3 IX1+	71 5 CBEQ 2 IX+	81 6 RTS 1 INH	91 3 BLT 2 REL	A1 2 CMP 2 IMM	B1 3 CMP 2 DIR	C1 4 CMP 3 EXT	D1 4 CMP 3 IX2	E1 3 CMP 2 IX1	F1 3 CMP 1 IX
02 5 BRSET1 3 DIR	12 5 BSET1 2 DIR	22 3 BHI 2 REL	32 5 LDHX 3 EXT	42 5 MUL 1 INH	52 6 DIV 1 INH	62 1 NSA 1 INH	72 1 DAA 1 INH	82 5+ BGND 1 INH	92 3 BGT 2 REL	A2 2 SBC 2 IMM	B2 3 SBC 2 DIR	C2 4 SBC 3 EXT	D2 4 SBC 3 IX2	E2 3 SBC 2 IX1	F2 3 SBC 1 IX
03 5 BRCLR1 3 DIR	13 5 BCLR1 2 DIR	23 3 BLS 2 REL	33 5 COM 2 DIR	43 1 COMA 1 INH	53 1 COMX 1 INH	63 5 COM 2 IX1	73 4 COM 1 IX	83 11 SWI 1 INH	93 3 BLE 2 REL	A3 2 CPX 2 IMM	B3 3 CPX 2 DIR	C3 4 CPX 3 EXT	D3 4 CPX 3 IX2	E3 3 CPX 2 IX1	F3 3 CPX 1 IX
04 5 BRSET2 3 DIR	14 5 BSET2 2 DIR	24 3 BCC 2 REL	34 5 LSR 2 DIR	44 1 LSRA 1 INH	54 1 LSRX 1 INH	64 5 LSR 2 IX1	74 4 LSR 1 IX	84 1 TAP 1 INH	94 2 TXS 1 INH	A4 2 AND 2 IMM	B4 3 AND 2 DIR	C4 4 AND 3 EXT	D4 4 AND 3 IX2	E4 3 AND 2 IX1	F4 3 AND 1 IX
05 5 BRCLR2 3 DIR	15 5 BCLR2 2 DIR	25 3 BCS 2 REL	35 4 STHX 2 DIR	45 3 LDHX 3 IMM	55 4 LDHX 2 DIR	65 3 CPHX 3 IMM	75 5 CPHX 2 DIR	85 1 TPA 1 INH	95 2 TSX 1 INH	A5 2 BIT 2 IMM	B5 3 BIT 2 DIR	C5 4 BIT 3 EXT	D5 4 BIT 3 IX2	E5 3 BIT 2 IX1	F5 3 BIT 1 IX
06 5 BRSET3 3 DIR	16 5 BSET3 2 DIR	26 3 BNE 2 REL	36 5 ROR 2 DIR	46 1 RORA 1 INH	56 1 RORX 1 INH	66 5 ROR 2 IX1	76 4 ROR 1 IX	86 3 PULA 1 INH	96 5 STHX 3 EXT	A6 2 LDA 2 IMM	B6 3 LDA 2 DIR	C6 4 LDA 3 EXT	D6 4 LDA 3 IX2	E6 3 LDA 2 IX1	F6 3 LDA 1 IX
07 5 BRCLR3 3 DIR	17 5 BCLR3 2 DIR	27 3 BEQ 2 REL	37 5 ASR 2 DIR	47 1 ASRA 1 INH	57 1 ASRX 1 INH	67 5 ASR 2 IX1	77 4 ASR 1 IX	87 2 PSHA 1 INH	97 1 TAX 1 INH	A7 2 AIS 2 IMM	B7 3 STA 2 DIR	C7 4 STA 3 EXT	D7 4 STA 3 IX2	E7 3 STA 2 IX1	F7 2 STA 1 IX
08 5 BRSET4 3 DIR	18 5 BSET4 2 DIR	28 3 BHCC 2 REL	38 5 LSL 2 DIR	48 1 LSLA 1 INH	58 1 LSLX 1 INH	68 5 LSL 2 IX1	78 4 LSL 1 IX	88 3 PULX 1 INH	98 1 CLC 1 INH	A8 2 EOR 2 IMM	B8 3 EOR 2 DIR	C8 4 EOR 3 EXT	D8 4 EOR 3 IX2	E8 3 EOR 2 IX1	F8 3 EOR 1 IX
09 5 BRCLR4 3 DIR	19 5 BCLR4 2 DIR	29 3 BHCS 2 REL	39 5 ROL 2 DIR	49 1 ROLA 1 INH	59 1 ROLX 1 INH	69 5 ROL 2 IX1	79 4 ROL 1 IX	89 2 PSHX 1 INH	99 1 SEC 1 INH	A9 2 ADC 2 IMM	B9 3 ADC 2 DIR	C9 4 ADC 3 EXT	D9 4 ADC 3 IX2	E9 3 ADC 2 IX1	F9 3 ADC 1 IX
0A 5 BRSET5 3 DIR	1A 5 BSET5 2 DIR	2A 3 BPL 2 REL	3A 5 DEC 2 DIR	4A 1 DECA 1 INH	5A 1 DECX 1 INH	6A 5 DEC 2 IX1	7A 4 DEC 1 IX	8A 3 PULH 1 INH	9A 1 CLI 1 INH	AA 2 ORA 2 IMM	BA 3 ORA 2 DIR	CA 4 ORA 3 EXT	DA 4 ORA 3 IX2	EA 3 ORA 2 IX1	FA 3 ORA 1 IX
0B 5 BRCLR5 3 DIR	1B 5 BCLR5 2 DIR	2B 3 BMI 2 REL	3B 7 DBNZ 3 DIR	4B 4 DBNZA 2 INH	5B 4 DBNZX 2 INH	6B 7 DBNZ 3 IX1	7B 6 DBNZ 2 IX	8B 2 PSHH 1 INH	9B 1 SEI 1 INH	AB 2 ADD 2 IMM	BB 3 ADD 2 DIR	CB 4 ADD 3 EXT	DB 4 ADD 3 IX2	EB 3 ADD 2 IX1	FB 3 ADD 1 IX
0C 5 BRSET6 3 DIR	1C 5 BSET6 2 DIR	2C 3 BMC 2 REL	3C 5 INC 2 DIR	4C 1 INCA 1 INH	5C 1 INCX 1 INH	6C 5 INC 2 IX1	7C 4 INC 1 IX	8C 1 CLRH 1 INH	9C 1 RSP 1 INH		BC 3 JMP 2 DIR	CC 4 JMP 3 EXT	DC 4 JMP 3 IX2	EC 3 JMP 2 IX1	FC 3 JMP 1 IX
0D 5 BRCLR6 3 DIR	1D 5 BCLR6 2 DIR	2D 3 BMS 2 REL	3D 4 TST 2 DIR	4D 1 TSTA 1 INH	5D 1 TSTX 1 INH	6D 4 TST 2 IX1	7D 3 TST 1 IX		9D 1 NOP 1 INH	AD 5 BSR 2 REL	BD 5 JSR 2 DIR	CD 6 JSR 3 EXT	DD 6 JSR 3 IX2	ED 5 JSR 2 IX1	FD 5 JSR 1 IX
0E 5 BRSET7 3 DIR	1E 5 BSET7 2 DIR	2E 3 BIL 2 REL	3E 6 CPHX 3 EXT	4E 5 MOV 3 DD	5E 5 MOV 2 DIX+	6E 4 MOV 3 IMD	7E 5 MOV 2 IX+D	8E 2+ STOP 1 INH	9E Page 2	AE 2 LDX 2 IMM	BE 3 LDX 2 DIR	CE 4 LDX 3 EXT	DE 4 LDX 3 IX2	EE 3 LDX 2 IX1	FE 3 LDX 1 IX
0F 5 BRCLR7 3 DIR	1F 5 BCLR7 2 DIR	2F 3 BIH 2 REL	3F 5 CLR 2 DIR	4F 1 CLRA 1 INH	5F 1 CLRX 1 INH	6F 5 CLR 2 IX1	7F 4 CLR 1 IX	8F 2+ WAIT 1 INH	9F 1 TXA 1 INH	AF 2 AIX 2 IMM	BF 3 STX 2 DIR	CF 4 STX 3 EXT	DF 4 STX 3 IX2	EF 3 STX 2 IX1	FF 2 STX 1 IX

INH	**Inherent**	**REL**	**Relative**	**SP1**	**Stack Pointer, 8-Bit Offset**
IMM	**Immediate**	**IX**	**Indexed, No Offset**	**SP2**	**Stack Pointer, 16-Bit Offset**
DIR	**Direct**	**IX1**	**Indexed, 8-Bit Offset**	**IX+**	**Indexed, No Offset with Post Increment**
EXT	**Extended**	**IX2**	**Indexed, 16-Bit Offset**		
DD	**DIR to DIR**	**IMD**	**IMM to DIR**	**IX1+**	**Indexed, 1-Byte Offset with Post Increment**
IX+D	**IX+ to DIR**	**DIX+**	**DIR to IX+**		

Opcode in Hexadecimal	F0 3	**HCS08 Cycles**
	SUB	**Instruction Mnemonic**
Number of Bytes	1 IX	**Addressing Mode**

Table 7-3. Opcode Map (Sheet 2 of 2)

Bit-Manipulation		Branch	Read-Modify-Write					Control		Register/Memory					
						9E60 6 NEG 3 SP1							9ED0 5 SUB 4 SP2	9EE0 4 SUB 3 SP1	
						9E61 6 CBEQ 4 SP1							9ED1 5 CMP 4 SP2	9EE1 4 CMP 3 SP1	
													9ED2 5 SBC 4 SP2	9EE2 4 SBC 3 SP1	
						9E63 6 COM 3 SP1							9ED3 5 CPX 4 SP2	9EE3 4 CPX 3 SP1	9EF3 6 CPHX 3 SP1
						9E64 6 LSR 3 SP1							9ED4 5 AND 4 SP2	9EE4 4 AND 3 SP1	
													9ED5 5 BIT 4 SP2	9EE5 4 BIT 3 SP1	
						9E66 6 ROR 3 SP1							9ED6 5 LDA 4 SP2	9EE6 4 LDA 3 SP1	
						9E67 6 ASR 3 SP1							9ED7 5 STA 4 SP2	9EE7 4 STA 3 SP1	
						9E68 6 LSL 3 SP1							9ED8 5 EOR 4 SP2	9EE8 4 EOR 3 SP1	
						9E69 6 ROL 3 SP1							9ED9 5 ADC 4 SP2	9EE9 4 ADC 3 SP1	
						9E6A 6 DEC 3 SP1							9EDA 5 ORA 4 SP2	9EEA 4 ORA 3 SP1	
						9E6B 8 DBNZ 4 SP1							9EDB 5 ADD 4 SP2	9EEB 4 ADD 3 SP1	
						9E6C 6 INC 3 SP1									
						9E6D 5 TST 3 SP1									
										9EAE 5 LDHX 2 IX	9EBE 6 LDHX 4 IX2	9ECE 5 LDHX 3 IX1	9EDE 5 LDX 4 SP2	9EEE 4 LDX 3 SP1	9EFE 5 LDHX 3 SP1
						9E6F 6 CLR 3 SP1							9EDF 5 STX 4 SP2	9EEF 4 STX 3 SP1	9EFF 5 STHX 3 SP1

INH	**Inherent**	**REL**	**Relative**	**SP1**	**Stack Pointer, 8-Bit Offset**
IMM	**Immediate**	**IX**	**Indexed, No Offset**	**SP2**	**Stack Pointer, 16-Bit Offset**
DIR	**Direct**	**IX1**	**Indexed, 8-Bit Offset**	**IX+**	**Indexed, No Offset with Post Increment**
EXT	**Extended**	**IX2**	**Indexed, 16-Bit Offset**		
DD	**DIR to DIR**	**IMD**	**IMM to DIR**	**IX1+**	**Indexed, 1-Byte Offset with Post Increment**
IX+D	**IX+ to DIR**	**DIX+**	**DIR to IX+**		

Note: All Sheet 2 Opcodes are Preceded by the Page 2 Prebyte (9E)

Prebyte (9E) and Opcode in Hexadecimal
Number of Bytes

9E60 6	**HCS08 Cycles**
NEG	**Instruction Mnemonic**
3 SP1	**Addressing Mode**

Chapter 8
Cyclic Redundancy Check (S08CRCV1)

8.1 Introduction

The MC9S08AC60 Series includes a CRC module to support fast cyclic redundancy checks on memory.

8.1.1 Features

Features of the CRC module include:

- Hardware CRC generator circuit using 16-bit shift register
- CRC16-CCITT compliancy with $x^{16} + x^{12} + x^5 + 1$ polynomial
- Error detection for all single, double, odd, and most multi-bit errors
- Programmable initial seed value
- High-speed CRC calculation
- Optional feature to transpose input data and CRC result via transpose register, required on applications where bytes are in LSb (Least Significant bit) format.

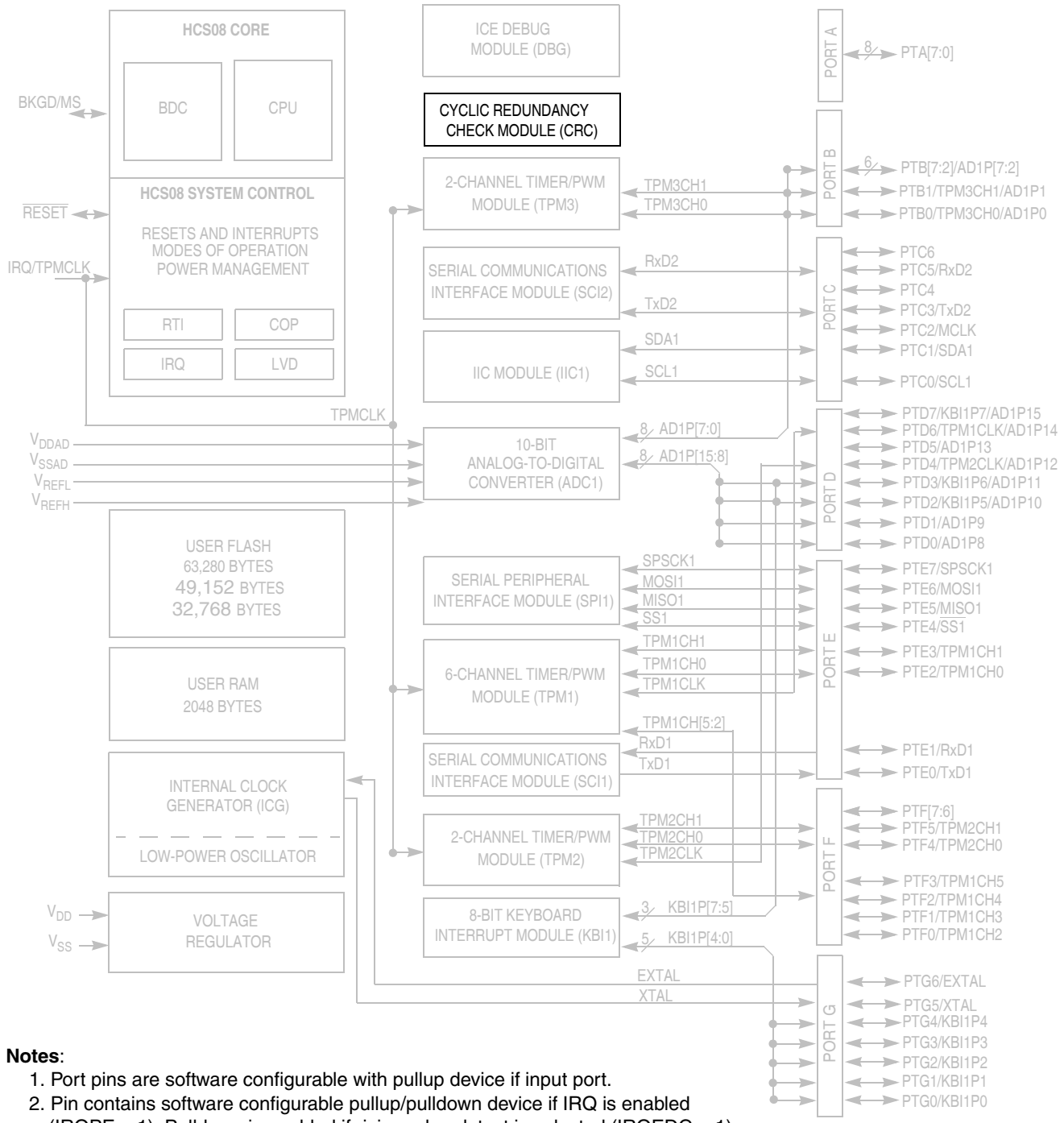

Notes:

1. Port pins are software configurable with pullup device if input port.
2. Pin contains software configurable pullup/pulldown device if IRQ is enabled (IRQPE = 1). Pulldown is enabled if rising edge detect is selected (IRQEDG = 1)
3. Pin contains integrated pullup device.
4. PTD3, PTD2, PTD7, and PTG4 contain both pullup and pulldown devices. Pulldown enabled when KBI is enabled (KBIPEn = 1) and rising edge is selected (KBEDGn = 1).
5. TPMCLK, TPM1CLK, and TPM2CLK options are configured via software; out of reset, TPM1CLK, TPM2CLK, and TPMCLK are available to TPM1, TPM2, and TPM3 respectively.

Figure 8-1. Block Diagram Highlighting CRC Module

8.1.2 Modes of Operation

This section defines the CRC operation in run, wait, and stop modes.

- Run Mode - This is the basic mode of operation.
- Wait Mode - The CRC module is operational.
- Stop 1 and 2 Modes- The CRC module is not functional in these modes and will be put into its reset state upon recovery from stop.
- Stop 3 Mode - In this mode, the CRC module will go into a low power standby state. Any CRC calculations in progress will stop and resume after the CPU goes into run mode.

8.1.3 Block Diagram

Figure 8-2 provides a block diagram of the CRC module

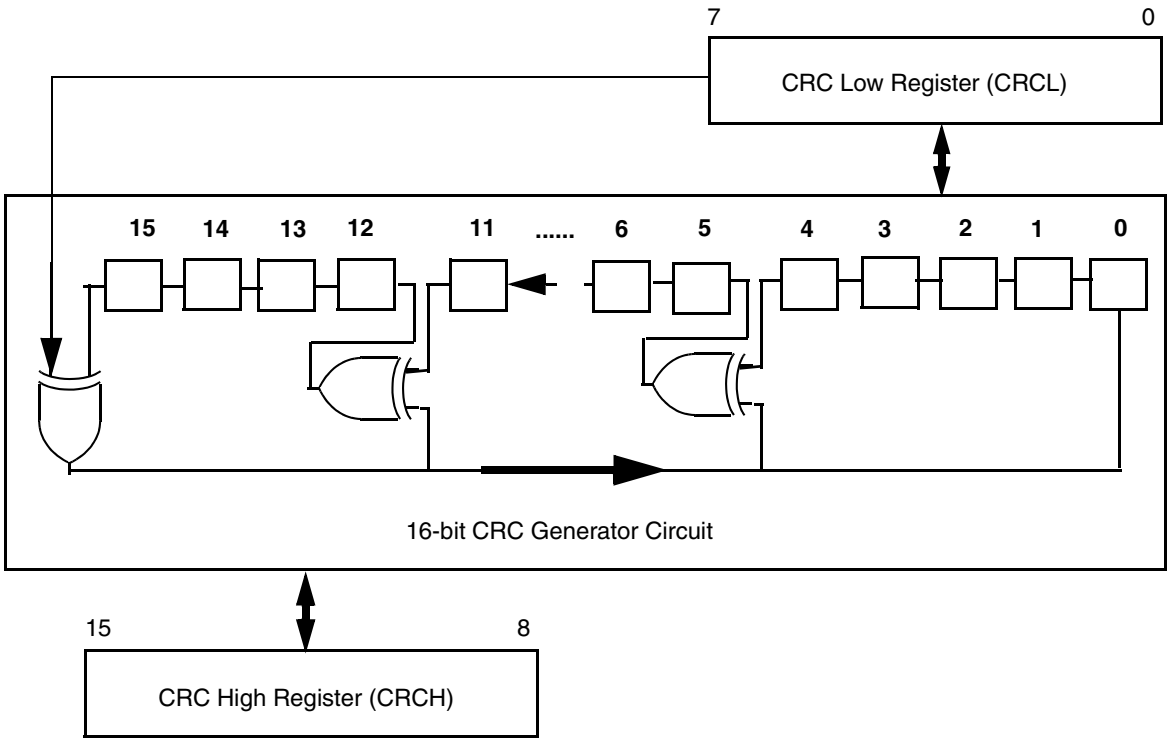

Figure 8-2. Cyclic Redundancy Check (CRC) Module Block Diagram

8.2 External Signal Description

There are no CRC signals that connect off chip.

8.3 Register Definition

8.3.1 Memory Map

Table 8-1. CRC Register Summary

Name		7	6	5	4	3	2	1	0
CRCH	R W	Bit 15	Bit 14	Bit 13	Bit 12	Bit 11	Bit 10	Bit 9	Bit 8
CRCL	R W	Bit 7	Bit 6	Bit 5	Bit 4	Bit 3	Bit 2	Bit 1	Bit 0

8.3.2 Register Descriptions

The CRC module includes:

- A 16-bit CRC result and seed register (CRCH:CRCL)

Refer to the direct-page register summary in the Memory chapter of this data sheet for the absolute address assignments for all CRC registers. This section refers to registers only by their names. A Freescale-provided equate or header file is used to translate these names into the appropriate absolute addresses.

8.3.2.1 CRC High Register (CRCH)

	7	6	5	4	3	2	1	0
R W	Bit 15	Bit 14	Bit 13	Bit 12	Bit 11	Bit 10	Bit 9	Bit 8
Reset	0	0	0	0	0	0	0	0

Figure 8-3. CRC High Register (CRCH)

Table 8-2. Register Field Descriptions

Field	Description
7:0 CRCH	**CRCH** -- This is the high byte of the 16-bit CRC register. A write to CRCH will load the high byte of the initial 16-bit seed value directly into bits 15-8 of the shift register in the CRC generator. The CRC generator will then expect the low byte of the seed value to be written to CRCL and loaded directly into bits 7-0 of the shift register. Once both seed bytes written to CRCH:CRCL have been loaded into the CRC generator, and a byte of data has been written to CRCL, the shift register will begin shifting. A read of CRCH will read bits 15-8 of the current CRC calculation result directly out of the shift register in the CRC generator.

8.3.2.2 CRC Low Register (CRCL)

	7	6	5	4	3	2	1	0
R W	Bit 7	Bit 6	Bit 5	Bit 4	Bit 3	Bit 2	Bit 1	Bit 0
Reset	0	0	0	0	0	0	0	0

Figure 8-4. CRC High Register (CRCH)

Table 8-3. Register Field Descriptions

Field	Description
7:0 CRCL	**CRCL** -- This is the low byte of the 16-bit CRC register. Normally, a write to CRCL will cause the CRC generator to begin clocking through the 16-bit CRC generator. As a special case, if a write to CRCH has occurred previously, a subsequent write to CRCL will load the value in the register as the low byte of a 16-bit seed value directly into bits 7-0 of the shift register in the CRC generator. A read of CRCL will read bits 7-0 of the current CRC calculation result directly out of the shift register in the CRC generator.

8.4 Functional Description

To enable the CRC function, a write to the CRCH register will trigger the first half of the seed mechanism which will place the CRCH value directly into bits 15-8 of the CRC generator shift register. The CRC generator will then expect a write to CRCL to complete the seed mechanism.

As soon as the CRCL register is written to, its value will be loaded directly into bits 7-0 of the shift register, and the second half of the seed mechanism will be complete. This value in CRCH:CRCL will be the initial seed value in the CRC generator.

Now the first byte of the data on which the CRC calculation will be applied should be written to CRCL. This write after the completion of the seed mechanism will trigger the CRC module to begin the CRC checking process. The CRC generator will shift the bits in the CRCL register (MSB first) into the shift register of the generator. After all 8 bits have been shifted into the CRC generator (in the next bus cycle after the data write to CRCL), the result of the shifting, or the value currently in the shift register, can be read directly from CRCH:CRCL, and the next data byte to include in the CRC calculation can be written to the CRCL register.

This next byte will then also be shifted through the CRC generator's 16-bit shift register, and after the shifting has been completed, the result of this second calculation can be read directly from CRCH:CRCL.

After each byte has finished shifting, a new CRC result will appear in CRCH:CRCL, and an additional byte may be written to the CRCL register to be included within the CRC16-CCITT calculation. A new CRC result will appear in CRCH:CRCL each time 8-bits have been shifted into the shift register.

To start a new CRC calculation, write to CRCH, and the seed mechanism for a new CRC calculation will begin again.

8.4.1 ITU-T (CCITT) recommendations & expected CRC results

The CRC polynomial 0x1021 ($x^{16} + x^{12} + x^5 + 1$) is popularly known as *CRC-CCITT* since it was initially proposed by the ITU-T (formerly CCITT) committee.

Although the ITU-T recommendations are very clear about the polynomial to be used, 0x1021, they accept variations in the way they are implemented:

- ITU-T V.41 implements the same circuit shown in Figure 8-2, but it recommends a SEED = 0x0000.

- ITU-T T.30 and ITU-T X.25 implement the same circuit shown in Figure 8-2, but they recommend the final CRC result to be negated (one-complement operation). Also, they recommend a SEED = 0xFFFF.

Moreover, it is common to find circuits in literature slightly different from the one suggested by the recommendations above, but also known as CRC-CCITT circuits (many variations require the message to be augmented with zeros).

The circuit implemented in CRC module is exactly the one suggested by the ITU-T V.41 recommendation, with an added flexibility of a programmable SEED. As in ITU-T V.41, no augmentation is needed and the CRC result is not negated. Below are some expected results that can be used as a reference:

Table 8-4. Expected CRC results

Message	SEED (initial CRC value)	CRC result
A	0x0000	**0x58e5**
A	0xffff	**0xb915**
123456789	0x0000	**0x31c3**
123456789	0xffff	**0x29b1**
A string of 256 upper case “A” characters with no line breaks	0x0000	**0xabe3**
A string of 256 upper case “A” characters with no line breaks	0xffff	**0xea0b**

8.5 Initialization Information

To initialize the CRC Module and initiate a CRC16-CCITT calculation, follow this procedure:

1. Write high byte of initial seed value to CRCH.
2. Write low byte of initial seed value to CRCL.
3. Write first byte of data on which CRC is to be calculated to CRCL.
4. In the next bus cycle after step 3, if desired, the CRC result from the first byte can be read from CRCH:CRCL.

5. Repeat steps 3-4 until the end of all data to be checked.

Chapter 9
Analog-to-Digital Converter (S08ADC10V1)

9.1 Overview

The 10-bit analog-to-digital converter (ADC) is a successive approximation ADC designed for operation within an integrated microcontroller system-on-chip. The ADC module design supports up to 28 separate analog inputs (AD0-AD27). Only 18 (AD0-AD15, AD26, and AD27) of the possible inputs are implemented on the MC9S08AC60 Series Family of MCUs. These inputs are selected by the ADCH bits. Some inputs are shared with I/O pins as shown in Figure 9-1. All of the channel assignments of the ADC for the MC9S08AC60 Series devices are summarized in Table 9-1.

9.2 Channel Assignments

The ADC channel assignments for the MC9S08AC60 Series devices are shown in the table below. Channels that are unimplemented are internally connected to V_{REFL}. Reserved channels convert to an unknown value. Channels which are connected to an I/O pin have an associated pin control bit as shown.

Table 9-1. ADC Channel Assignment

ADCH	Channel	Input	Pin Control	ADCH	Channel	Input	Pin Control
00000	AD0	PTB0/ADCP0	ADPC0	10000	AD16	V_{REFL}	N/A
00001	AD1	PTB1/ADCP1	ADPC1	10001	AD17	V_{REFL}	N/A
00010	AD2	PTB2/ADCP2	ADPC2	10010	AD18	V_{REFL}	N/A
00011	AD3	PTB3/ADCP3	ADPC3	10011	AD19	V_{REFL}	N/A
00100	AD4	PTB4/ADCP4	ADPC4	10100	AD20	V_{REFL}	N/A
00101	AD5	PTB5/ADCP5	ADPC5	10101	AD21	V_{REFL}	N/A
00110	AD6	PTB6/ADCP6	ADPC6	10110	AD22	Reserved	N/A
00111	AD7	PTB7/ADCP7	ADPC7	10111	AD23	Reserved	N/A
01000	AD8	PTD0/ADCP8	ADPC8	11000	AD24	Reserved	N/A
01001	AD9	PTD1/ADCP9	ADPC9	11001	AD25	Reserved	N/A
01010	AD10	PTD2/ADCP10/ KBI1P5	ADPC10	11010	AD26	Temperature Sensor[1]	N/A
01011	AD11	PTD3/ADCP11/ KBI1P6	ADPC11	11011	AD27	Internal Bandgap[2]	N/A
01100	AD12	PTD4/ADCP12/ TPM2CLK	ADPC12	11100	-	Reserved	N/A
01101	AD13	PTD5/ADCP13	ADPC13	11101	V_{REFH}	V_{REFH}	N/A
01110	AD14	PTD6/ADCP14/ TPM1CLK	ADPC14	11110	V_{REFL}	V_{REFL}	N/A
01111	AD15	PTD7/ADCP15/ KBI1P7	ADPC15	11111	module disabled	None	N/A

[1] For more information, see Section 9.2.3, "Temperature Sensor."

[2] Selecting the internal bandgap channel requires BGBE =1 in SPMSC1 see Section 5.9.8, "System Power Management Status and Control 1 Register (SPMSC1)." For value of bandgap voltage reference see Section A.6, "DC Characteristics."

9.2.1 Alternate Clock

The ADC module is capable of performing conversions using the MCU bus clock, the bus clock divided by two, the local asynchronous clock (ADACK) within the module, or the alternate clock, ALTCLK. The alternate clock for the MC9S08AC60 Series MCU devices is the external reference clock (ICGERCLK) from the internal clock generator (ICG) module.

Because ICGERCLK is active only while an external clock source is enabled, the ICG must be configured for either FBE or FEE mode (CLKS1 = 1). ICGERCLK must run at a frequency such that the ADC conversion clock (ADCK) runs at a frequency within its specified range (f_{ADCK}) after being divided down from the ALTCLK input as determined by the ADIV bits. For example, if the ADIV bits are set up to divide by four, then the minimum frequency for ALTCLK (ICGERCLK) is four times the minimum value for f_{ADCK} and the maximum frequency is four times the maximum value for f_{ADCK}. Because of the minimum frequency requirement, when an oscillator circuit is used it must be configured for high range operation (RANGE = 1).

ALTCLK is active while the MCU is in wait mode provided the conditions described above are met. This allows ALTCLK to be used as the conversion clock source for the ADC while the MCU is in wait mode.

ALTCLK cannot be used as the ADC conversion clock source while the MCU is in stop3.

9.2.2 Hardware Trigger

The ADC hardware trigger, ADHWT, is output from the real time interrupt (RTI) counter. The RTI counter can be clocked by either ICGERCLK or a nominal 1 kHz clock source within the RTI block. The 1-kHz clock source can be used with the MCU in run, wait, or stop3. With the ICG configured for either FBE or FEE mode, ICGERCLK can be used with the MCU in run or wait.

The period of the RTI is determined by the input clock frequency and the RTIS bits. When the ADC hardware trigger is enabled, a conversion is initiated upon an RTI counter overflow. The RTI counter is a free running counter that generates an overflow at the RTI rate determined by the RTIS bits.

NOTE

An ADC trigger is generated on the first RTI overflow and every two RTI counter overflows following. This is due to the fact that the RTI counter expires and the ADC trigger is generated on RTI output rising edge.

9.2.2.1 Analog Pin Enables

The ADC on MC9S08AC60 Series contains only two analog pin enable registers, APCTL1 and APCTL2.

9.2.2.2 Low-Power Mode Operation

The ADC is capable of running in stop3 mode but requires LVDSE and LVDE in SPMSC1 to be set.

9.2.3 Temperature Sensor

The ADC module includes a temperature sensor whose output is connected to one of the ADC analog channel inputs. Equation 9-1 provides an approximate transfer function of the temperature sensor.

$$\text{Temp} = 25 - ((V_{TEMP} - V_{TEMP25}) \div m) \qquad \textit{Eqn. 9-1}$$

where:

— V_{TEMP} is the voltage of the temperature sensor channel at the ambient temperature.
— V_{TEMP25} is the voltage of the temperature sensor channel at 25°C.
— m is the hot or cold voltage versus temperature slope in V/°C.

For temperature calculations, use the V_{TEMP25} and m values from the ADC Electricals table.

In application code, the user reads the temperature sensor channel, calculates V_{TEMP}, and compares to V_{TEMP25} . If V_{TEMP} is greater than V_{TEMP25} the cold slope value is applied in Equation 9-1. If V_{TEMP} is less than V_{TEMP25} the hot slope value is applied in Equation 9-1.

To improve accuracy , calibrate the bandgap voltage reference and temperature sensor.

Calibrating at 25 °C will improve accuracy to ± 4.5 °C.

Calibration at 3 points, -40 °C, 25 °C, and 125 °C will improve accuracy to ± 2.5 °C. Once calibration has been completed, the user will need to calculate the slope for both hot and cold. In application code, the user would then calculate the temperature using Equation 9-1 as detailed above and then determine if the temperature is above or below 25 °C. Once determined if the temperature is above or below 25 °C, the user can recalculate the temperature using the hot or cold slope value obtained during calibration.

For more information on using the temperature sensor, consult AN3031.

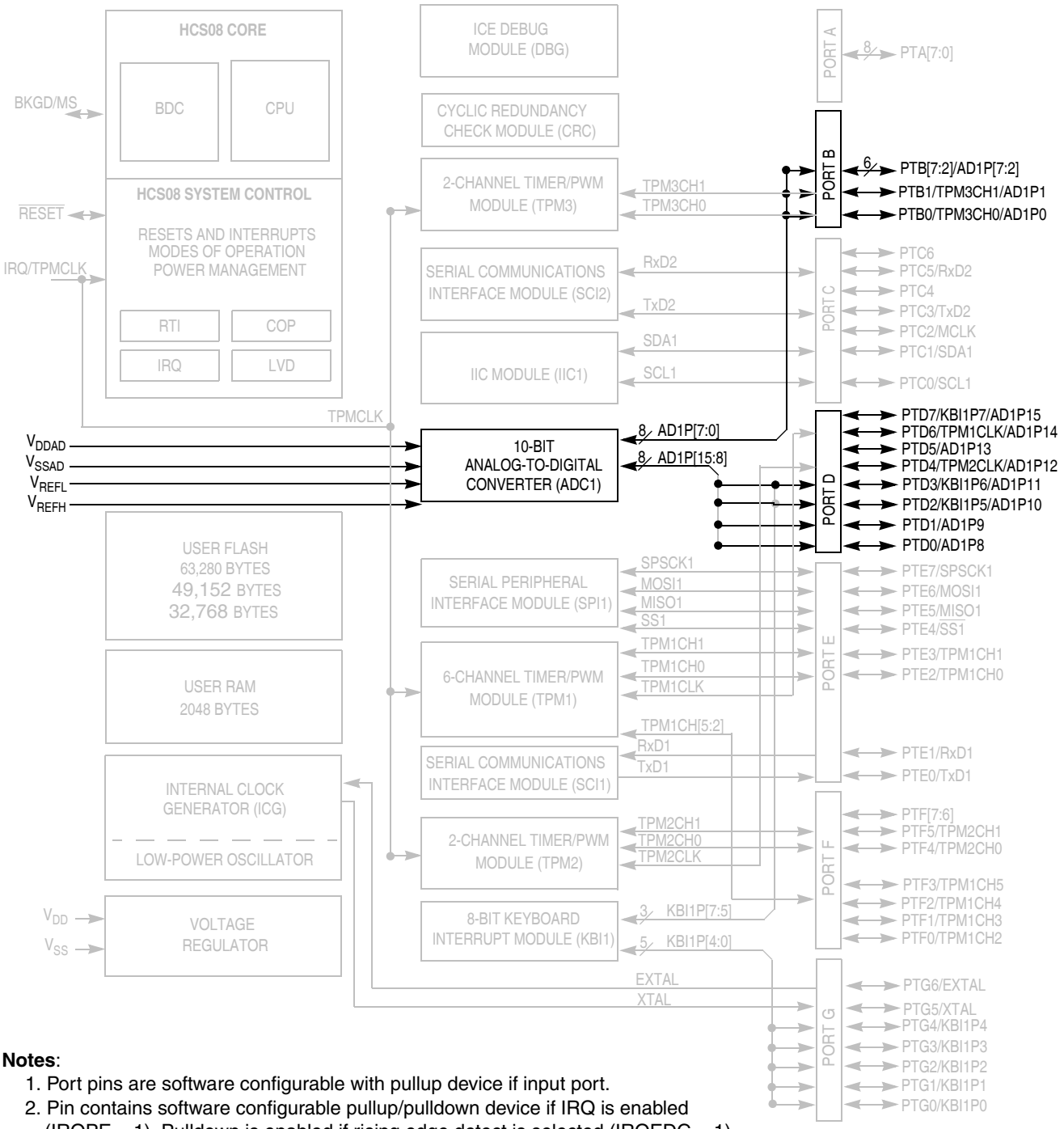

Notes:

1. Port pins are software configurable with pullup device if input port.
2. Pin contains software configurable pullup/pulldown device if IRQ is enabled (IRQPE = 1). Pulldown is enabled if rising edge detect is selected (IRQEDG = 1)
3. Pin contains integrated pullup device.
4. PTD3, PTD2, PTD7, and PTG4 contain both pullup and pulldown devices. Pulldown enabled when KBI is enabled (KBIPEn = 1) and rising edge is selected (KBEDGn = 1).
5. TPMCLK, TPM1CLK, and TPM2CLK options are configured via software; out of reset, TPM1CLK, TPM2CLK, and TPMCLK are available to TPM1, TPM2, and TPM3 respectively.

Figure 9-1. MC9S08AC60 Block Diagram Highlighting ADC Block and Pins

9.2.4 Features

Features of the ADC module include:

- Linear successive approximation algorithm with 10 bits resolution.
- Up to 28 analog inputs.
- Output formatted in 10- or 8-bit right-justified format.
- Single or continuous conversion (automatic return to idle after single conversion).
- Configurable sample time and conversion speed/power.
- Conversion complete flag and interrupt.
- Input clock selectable from up to four sources.
- Operation in wait or stop3 modes for lower noise operation.
- Asynchronous clock source for lower noise operation.
- Selectable asynchronous hardware conversion trigger.
- Automatic compare with interrupt for less-than, or greater-than or equal-to, programmable value.

9.2.5 Block Diagram

Figure 9-2 provides a block diagram of the ADC module

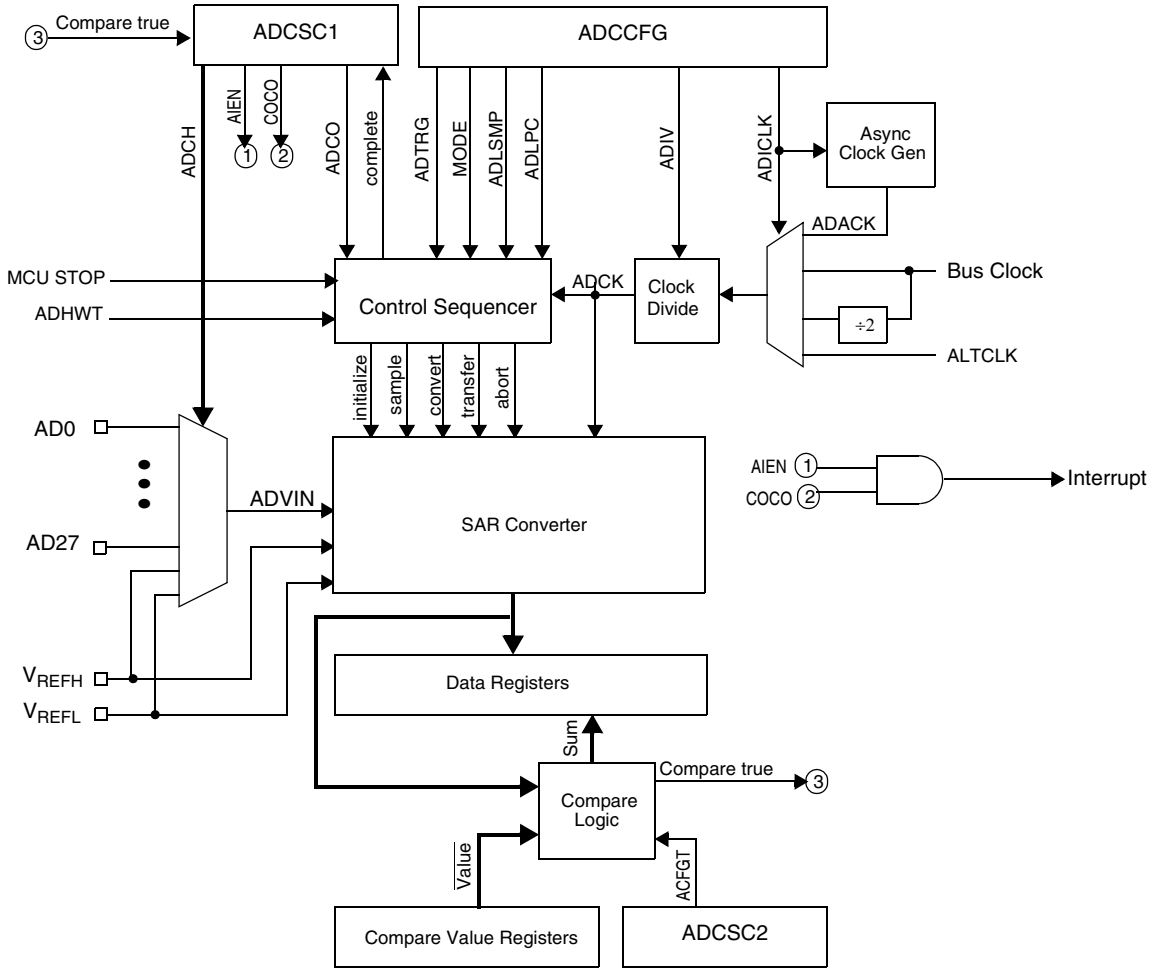

Figure 9-2. ADC Block Diagram

9.3 External Signal Description

The ADC module supports up to 28 separate analog inputs. It also requires four supply/reference/ground connections.

Table 9-2. Signal Properties

Name	Function
AD27–AD0	Analog Channel inputs
V_{REFH}	High reference voltage
V_{REFL}	Low reference voltage
V_{DDAD}	Analog power supply
V_{SSAD}	Analog ground

9.3.1 Analog Power (V_{DDAD})

The ADC analog portion uses V_{DDAD} as its power connection. In some packages, V_{DDAD} is connected internally to V_{DD}. If externally available, connect the V_{DDAD} pin to the same voltage potential as V_{DD}. External filtering may be necessary to ensure clean V_{DDAD} for good results.

9.3.2 Analog Ground (V_{SSAD})

The ADC analog portion uses V_{SSAD} as its ground connection. In some packages, V_{SSAD} is connected internally to V_{SS}. If externally available, connect the V_{SSAD} pin to the same voltage potential as V_{SS}.

9.3.3 Voltage Reference High (V_{REFH})

V_{REFH} is the high reference voltage for the converter. In some packages, V_{REFH} is connected internally to V_{DDAD}. If externally available, V_{REFH} may be connected to the same potential as V_{DDAD}, or may be driven by an external source that is between the minimum V_{DDAD} spec and the V_{DDAD} potential (V_{REFH} must never exceed V_{DDAD}).

9.3.4 Voltage Reference Low (V_{REFL})

V_{REFL} is the low reference voltage for the converter. In some packages, V_{REFL} is connected internally to V_{SSAD}. If externally available, connect the V_{REFL} pin to the same voltage potential as V_{SSAD}.

9.3.5 Analog Channel Inputs (ADx)

The ADC module supports up to 28 separate analog inputs. An input is selected for conversion through the ADCH channel select bits.

9.4 Register Definition

These memory mapped registers control and monitor operation of the ADC:

- Status and control register, ADCSC1
- Status and control register, ADCSC2
- Data result registers, ADCRH and ADCRL
- Compare value registers, ADCCVH and ADCCVL
- Configuration register, ADCCFG
- Pin enable registers, APCTL1, APCTL2, APCTL3

9.4.1 Status and Control Register 1 (ADCSC1)

This section describes the function of the ADC status and control register (ADCSC1). Writing ADCSC1 aborts the current conversion and initiates a new conversion (if the ADCH bits are equal to a value other than all 1s).

	7	6	5	4	3	2	1	0
R	COCO	AIEN	ADCO	ADCH				
W								
Reset:	0	0	0	1	1	1	1	1

= Unimplemented or Reserved

Figure 9-3. Status and Control Register (ADCSC1)

Table 9-3. ADCSC1 Register Field Descriptions

Field	Description
7 COCO	**Conversion Complete Flag** — The COCO flag is a read-only bit which is set each time a conversion is completed when the compare function is disabled (ACFE = 0). When the compare function is enabled (ACFE = 1) the COCO flag is set upon completion of a conversion only if the compare result is true. This bit is cleared whenever ADCSC1 is written or whenever ADCRL is read. 0 Conversion not completed 1 Conversion completed
6 AIEN	**Interrupt Enable** — AIEN is used to enable conversion complete interrupts. When COCO becomes set while AIEN is high, an interrupt is asserted. 0 Conversion complete interrupt disabled 1 Conversion complete interrupt enabled
5 ADCO	**Continuous Conversion Enable** — ADCO is used to enable continuous conversions. 0 One conversion following a write to the ADCSC1 when software triggered operation is selected, or one conversion following assertion of ADHWT when hardware triggered operation is selected. 1 Continuous conversions initiated following a write to ADCSC1 when software triggered operation is selected. Continuous conversions are initiated by an ADHWT event when hardware triggered operation is selected.
4:0 ADCH	**Input Channel Select** — The ADCH bits form a 5-bit field which is used to select one of the input channels. The input channels are detailed in Figure 9-4. The successive approximation converter subsystem is turned off when the channel select bits are all set to 1. This feature allows for explicit disabling of the ADC and isolation of the input channel from all sources. Terminating continuous conversions this way will prevent an additional, single conversion from being performed. It is not necessary to set the channel select bits to all 1s to place the ADC in a low-power state when continuous conversions are not enabled because the module automatically enters a low-power state when a conversion completes.

Figure 9-4. Input Channel Select

ADCH	Input Select
00000	AD0
00001	AD1
00010	AD2
00011	AD3
00100	AD4
00101	AD5
00110	AD6
00111	AD7

ADCH	Input Select
10000	AD16
10001	AD17
10010	AD18
10011	AD19
10100	AD20
10101	AD21
10110	AD22
10111	AD23

Figure 9-4. Input Channel Select (continued)

ADCH	Input Select
01000	AD8
01001	AD9
01010	AD10
01011	AD11
01100	AD12
01101	AD13
01110	AD14
01111	AD15

ADCH	Input Select
11000	AD24
11001	AD25
11010	AD26
11011	AD27
11100	Reserved
11101	V_{REFH}
11110	V_{REFL}
11111	Module disabled

9.4.2 Status and Control Register 2 (ADCSC2)

The ADCSC2 register is used to control the compare function, conversion trigger and conversion active of the ADC module.

	7	6	5	4	3	2	1	0
R	ADACT	ADTRG	ACFE	ACFGT	0	0	R[1]	R[1]
W								
Reset:	0	0	0	0	0	0	0	0

= Unimplemented or Reserved

[1] Bits 1 and 0 are reserved bits that must always be written to 0.

Figure 9-5. Status and Control Register 2 (ADCSC2)

Table 9-4. ADCSC2 Register Field Descriptions

Field	Description
7 ADACT	**Conversion Active** — ADACT indicates that a conversion is in progress. ADACT is set when a conversion is initiated and cleared when a conversion is completed or aborted. 0 Conversion not in progress 1 Conversion in progress
6 ADTRG	**Conversion Trigger Select** — ADTRG is used to select the type of trigger to be used for initiating a conversion. Two types of trigger are selectable: software trigger and hardware trigger. When software trigger is selected, a conversion is initiated following a write to ADCSC1. When hardware trigger is selected, a conversion is initiated following the assertion of the ADHWT input. 0 Software trigger selected 1 Hardware trigger selected

Table 9-4. ADCSC2 Register Field Descriptions (continued)

Field	Description
5 ACFE	**Compare Function Enable** — ACFE is used to enable the compare function. 0 Compare function disabled 1 Compare function enabled
4 ACFGT	**Compare Function Greater Than Enable** — ACFGT is used to configure the compare function to trigger when the result of the conversion of the input being monitored is greater than or equal to the compare value. The compare function defaults to triggering when the result of the compare of the input being monitored is less than the compare value. 0 Compare triggers when input is less than compare level 1 Compare triggers when input is greater than or equal to compare level

9.4.3 Data Result High Register (ADCRH)

ADCRH contains the upper two bits of the result of a 10-bit conversion. When configured for 8-bit conversions both ADR8 and ADR9 are equal to zero. ADCRH is updated each time a conversion completes except when automatic compare is enabled and the compare condition is not met. In 10-bit MODE, reading ADCRH prevents the ADC from transferring subsequent conversion results into the result registers until ADCRL is read. If ADCRL is not read until after the next conversion is completed, then the intermediate conversion result will be lost. In 8-bit mode there is no interlocking with ADCRL. In the case that the MODE bits are changed, any data in ADCRH becomes invalid.

	7	6	5	4	3	2	1	0
R	0	0	0	0	0	0	ADR9	ADR8
W								
Reset:	0	0	0	0	0	0	0	0

= Unimplemented or Reserved

Figure 9-6. Data Result High Register (ADCRH)

9.4.4 Data Result Low Register (ADCRL)

ADCRL contains the lower eight bits of the result of a 10-bit conversion, and all eight bits of an 8-bit conversion. This register is updated each time a conversion completes except when automatic compare is enabled and the compare condition is not met. In 10-bit mode, reading ADCRH prevents the ADC from transferring subsequent conversion results into the result registers until ADCRL is read. If ADCRL is not read until the after next conversion is completed, then the intermediate conversion results will be lost. In 8-bit mode, there is no interlocking with ADCRH. In the case that the MODE bits are changed, any data in ADCRL becomes invalid.

	7	6	5	4	3	2	1	0
R	ADR7	ADR6	ADR5	ADR4	ADR3	ADR2	ADR1	ADR0
W								
Reset:	0	0	0	0	0	0	0	0

= Unimplemented or Reserved

Figure 9-7. Data Result Low Register (ADCRL)

9.4.5 Compare Value High Register (ADCCVH)

This register holds the upper two bits of the 10-bit compare value. These bits are compared to the upper two bits of the result following a conversion in 10-bit mode when the compare function is enabled.In 8-bit operation, ADCCVH is not used during compare.

	7	6	5	4	3	2	1	0
R	0	0	0	0			ADCV9	ADCV8
W								
Reset:	0	0	0	0	0	0	0	0

= Unimplemented or Reserved

Figure 9-8. Compare Value High Register (ADCCVH)

9.4.6 Compare Value Low Register (ADCCVL)

This register holds the lower 8 bits of the 10-bit compare value, or all 8 bits of the 8-bit compare value. Bits ADCV7:ADCV0 are compared to the lower 8 bits of the result following a conversion in either 10-bit or 8-bit mode.

	7	6	5	4	3	2	1	0
R W	ADCV7	ADCV6	ADCV5	ADCV4	ADCV3	ADCV2	ADCV1	ADCV0
Reset:	0	0	0	0	0	0	0	0

Figure 9-9. Compare Value Low Register(ADCCVL)

9.4.7 Configuration Register (ADCCFG)

ADCCFG is used to select the mode of operation, clock source, clock divide, and configure for low power or long sample time.

	7	6	5	4	3	2	1	0
R W	ADLPC	ADIV		ADLSMP	MODE		ADICLK	
Reset:	0	0	0	0	0	0	0	0

Figure 9-10. Configuration Register (ADCCFG)

Table 9-5. ADCCFG Register Field Descriptions

Field	Description
7 ADLPC	**Low Power Configuration** — ADLPC controls the speed and power configuration of the successive approximation converter. This is used to optimize power consumption when higher sample rates are not required. 0 High speed configuration 1 Low power configuration: {FC31}The power is reduced at the expense of maximum clock speed.
6:5 ADIV	**Clock Divide Select** — ADIV select the divide ratio used by the ADC to generate the internal clock ADCK. Table 9-6 shows the available clock configurations.
4 ADLSMP	**Long Sample Time Configuration** — ADLSMP selects between long and short sample time. This adjusts the sample period to allow higher impedance inputs to be accurately sampled or to maximize conversion speed for lower impedance inputs. Longer sample times can also be used to lower overall power consumption when continuous conversions are enabled if high conversion rates are not required. 0 Short sample time 1 Long sample time
3:2 MODE	**Conversion Mode Selection** — MODE bits are used to select between 10- or 8-bit operation. See Table 9-7.
1:0 ADICLK	**Input Clock Select** — ADICLK bits select the input clock source to generate the internal clock ADCK. See Table 9-8.

Table 9-6. Clock Divide Select

ADIV	Divide Ratio	Clock Rate
00	1	Input clock
01	2	Input clock ÷ 2
10	4	Input clock ÷ 4
11	8	Input clock ÷ 8

Table 9-7. Conversion Modes

MODE	Mode Description
00	8-bit conversion (N=8)
01	Reserved
10	10-bit conversion (N=10)
11	Reserved

Table 9-8. Input Clock Select

ADICLK	Selected Clock Source
00	Bus clock
01	Bus clock divided by 2
10	Alternate clock (ALTCLK)
11	Asynchronous clock (ADACK)

9.4.8 Pin Control 1 Register (APCTL1)

The pin control registers are used to disable the I/O port control of MCU pins used as analog inputs. APCTL1 is used to control the pins associated with channels 0–7 of the ADC module.

	7	6	5	4	3	2	1	0
R W	ADPC7	ADPC6	ADPC5	ADPC4	ADPC3	ADPC2	ADPC1	ADPC0
Reset:	0	0	0	0	0	0	0	0

Figure 9-11. Pin Control 1 Register (APCTL1)

Table 9-9. APCTL1 Register Field Descriptions

Field	Description
7 ADPC7	**ADC Pin Control 7** — ADPC7 is used to control the pin associated with channel AD7. 0 AD7 pin I/O control enabled 1 AD7 pin I/O control disabled
6 ADPC6	**ADC Pin Control 6** — ADPC6 is used to control the pin associated with channel AD6. 0 AD6 pin I/O control enabled 1 AD6 pin I/O control disabled
5 ADPC5	**ADC Pin Control 5** — ADPC5 is used to control the pin associated with channel AD5. 0 AD5 pin I/O control enabled 1 AD5 pin I/O control disabled
4 ADPC4	**ADC Pin Control 4** — ADPC4 is used to control the pin associated with channel AD4. 0 AD4 pin I/O control enabled 1 AD4 pin I/O control disabled
3 ADPC3	**ADC Pin Control 3** — ADPC3 is used to control the pin associated with channel AD3. 0 AD3 pin I/O control enabled 1 AD3 pin I/O control disabled
2 ADPC2	**ADC Pin Control 2** — ADPC2 is used to control the pin associated with channel AD2. 0 AD2 pin I/O control enabled 1 AD2 pin I/O control disabled

Table 9-9. APCTL1 Register Field Descriptions (continued)

Field	Description
1 ADPC1	**ADC Pin Control 1** — ADPC1 is used to control the pin associated with channel AD1. 0 AD1 pin I/O control enabled 1 AD1 pin I/O control disabled
0 ADPC0	**ADC Pin Control 0** — ADPC0 is used to control the pin associated with channel AD0. 0 AD0 pin I/O control enabled 1 AD0 pin I/O control disabled

9.4.9 Pin Control 2 Register (APCTL2)

APCTL2 is used to control channels 8–15 of the ADC module.

	7	6	5	4	3	2	1	0
R W	ADPC15	ADPC14	ADPC13	ADPC12	ADPC11	ADPC10	ADPC9	ADPC8
Reset:	0	0	0	0	0	0	0	0

Figure 9-12. Pin Control 2 Register (APCTL2)

Table 9-10. APCTL2 Register Field Descriptions

Field	Description
7 ADPC15	**ADC Pin Control 15** — ADPC15 is used to control the pin associated with channel AD15. 0 AD15 pin I/O control enabled 1 AD15 pin I/O control disabled
6 ADPC14	**ADC Pin Control 14** — ADPC14 is used to control the pin associated with channel AD14. 0 AD14 pin I/O control enabled 1 AD14 pin I/O control disabled
5 ADPC13	**ADC Pin Control 13** — ADPC13 is used to control the pin associated with channel AD13. 0 AD13 pin I/O control enabled 1 AD13 pin I/O control disabled
4 ADPC12	**ADC Pin Control 12** — ADPC12 is used to control the pin associated with channel AD12. 0 AD12 pin I/O control enabled 1 AD12 pin I/O control disabled
3 ADPC11	**ADC Pin Control 11** — ADPC11 is used to control the pin associated with channel AD11. 0 AD11 pin I/O control enabled 1 AD11 pin I/O control disabled
2 ADPC10	**ADC Pin Control 10** — ADPC10 is used to control the pin associated with channel AD10. 0 AD10 pin I/O control enabled 1 AD10 pin I/O control disabled

Table 9-10. APCTL2 Register Field Descriptions (continued)

Field	Description
1 ADPC9	**ADC Pin Control 9** — ADPC9 is used to control the pin associated with channel AD9. 0 AD9 pin I/O control enabled 1 AD9 pin I/O control disabled
0 ADPC8	**ADC Pin Control 8** — ADPC8 is used to control the pin associated with channel AD8. 0 AD8 pin I/O control enabled 1 AD8 pin I/O control disabled

9.4.10 Pin Control 3 Register (APCTL3)

APCTL3 is used to control channels 16–23 of the ADC module.

	7	6	5	4	3	2	1	0
R W	ADPC23	ADPC22	ADPC21	ADPC20	ADPC19	ADPC18	ADPC17	ADPC16
Reset:	0	0	0	0	0	0	0	0

Figure 9-13. Pin Control 3 Register (APCTL3)

Table 9-11. APCTL3 Register Field Descriptions

Field	Description
7 ADPC23	**ADC Pin Control 23** — ADPC23 is used to control the pin associated with channel AD23. 0 AD23 pin I/O control enabled 1 AD23 pin I/O control disabled
6 ADPC22	**ADC Pin Control 22** — ADPC22 is used to control the pin associated with channel AD22. 0 AD22 pin I/O control enabled 1 AD22 pin I/O control disabled
5 ADPC21	**ADC Pin Control 21** — ADPC21 is used to control the pin associated with channel AD21. 0 AD21 pin I/O control enabled 1 AD21 pin I/O control disabled
4 ADPC20	**ADC Pin Control 20** — ADPC20 is used to control the pin associated with channel AD20. 0 AD20 pin I/O control enabled 1 AD20 pin I/O control disabled
3 ADPC19	**ADC Pin Control 19** — ADPC19 is used to control the pin associated with channel AD19. 0 AD19 pin I/O control enabled 1 AD19 pin I/O control disabled
2 ADPC18	**ADC Pin Control 18** — ADPC18 is used to control the pin associated with channel AD18. 0 AD18 pin I/O control enabled 1 AD18 pin I/O control disabled

Table 9-11. APCTL3 Register Field Descriptions (continued)

Field	Description
1 ADPC17	**ADC Pin Control 17** — ADPC17 is used to control the pin associated with channel AD17. 0 AD17 pin I/O control enabled 1 AD17 pin I/O control disabled
0 ADPC16	**ADC Pin Control 16** — ADPC16 is used to control the pin associated with channel AD16. 0 AD16 pin I/O control enabled 1 AD16 pin I/O control disabled

9.5 Functional Description

The ADC module is disabled during reset or when the ADCH bits are all high. The module is idle when a conversion has completed and another conversion has not been initiated. When idle, the module is in its lowest power state.

The ADC can perform an analog-to-digital conversion on any of the software selectable channels. The selected channel voltage is converted by a successive approximation algorithm into an 11-bit digital result. In 8-bit mode, the selected channel voltage is converted by a successive approximation algorithm into a 9-bit digital result.

When the conversion is completed, the result is placed in the data registers (ADCRH and ADCRL).In 10-bit mode, the result is rounded to 10 bits and placed in ADCRH and ADCRL. In 8-bit mode, the result is rounded to 8 bits and placed in ADCRL. The conversion complete flag (COCO) is then set and an interrupt is generated if the conversion complete interrupt has been enabled (AIEN = 1).

The ADC module has the capability of automatically comparing the result of a conversion with the contents of its compare registers. The compare function is enabled by setting the ACFE bit and operates in conjunction with any of the conversion modes and configurations.

9.5.1 Clock Select and Divide Control

One of four clock sources can be selected as the clock source for the ADC module. This clock source is then divided by a configurable value to generate the input clock to the converter (ADCK). The clock is selected from one of the following sources by means of the ADICLK bits.

- The bus clock, which is equal to the frequency at which software is executed. This is the default selection following reset.
- The bus clock divided by 2. For higher bus clock rates, this allows a maximum divide by 16 of the bus clock.
- ALTCLK, as defined for this MCU (See module section introduction).
- The asynchronous clock (ADACK) – This clock is generated from a clock source within the ADC module. When selected as the clock source this clock remains active while the MCU is in wait or stop3 mode and allows conversions in these modes for lower noise operation.

Whichever clock is selected, its frequency must fall within the specified frequency range for ADCK. If the available clocks are too slow, the ADC will not perform according to specifications. If the available clocks

are too fast, then the clock must be divided to the appropriate frequency. This divider is specified by the ADIV bits and can be divide-by 1, 2, 4, or 8.

9.5.2 Input Select and Pin Control

The pin control registers (APCTL3, APCTL2, and APCTL1) are used to disable the I/O port control of the pins used as analog inputs.When a pin control register bit is set, the following conditions are forced for the associated MCU pin:

- The output buffer is forced to its high impedance state.
- The input buffer is disabled. A read of the I/O port returns a zero for any pin with its input buffer disabled.
- The pullup is disabled.

9.5.3 Hardware Trigger

The ADC module has a selectable asynchronous hardware conversion trigger, ADHWT, that is enabled when the ADTRG bit is set. This source is not available on all MCUs. Consult the module introduction for information on the ADHWT source specific to this MCU.

When ADHWT source is available and hardware trigger is enabled (ADTRG=1), a conversion is initiated on the rising edge of ADHWT. If a conversion is in progress when a rising edge occurs, the rising edge is ignored. In continuous convert configuration, only the initial rising edge to launch continuous conversions is observed. The hardware trigger function operates in conjunction with any of the conversion modes and configurations.

9.5.4 Conversion Control

Conversions can be performed in either 10-bit mode or 8-bit mode as determined by the MODE bits. Conversions can be initiated by either a software or hardware trigger. In addition, the ADC module can be configured for low power operation, long sample time, continuous conversion, and automatic compare of the conversion result to a software determined compare value.

9.5.4.1 Initiating Conversions

A conversion is initiated:

- Following a write to ADCSC1 (with ADCH bits not all 1s) if software triggered operation is selected.
- Following a hardware trigger (ADHWT) event if hardware triggered operation is selected.
- Following the transfer of the result to the data registers when continuous conversion is enabled.

If continuous conversions are enabled a new conversion is automatically initiated after the completion of the current conversion. In software triggered operation, continuous conversions begin after ADCSC1 is written and continue until aborted. In hardware triggered operation, continuous conversions begin after a hardware trigger event and continue until aborted.

9.5.4.2 Completing Conversions

A conversion is completed when the result of the conversion is transferred into the data result registers, ADCRH and ADCRL. This is indicated by the setting of COCO. An interrupt is generated if AIEN is high at the time that COCO is set.

A blocking mechanism prevents a new result from overwriting previous data in ADCRH and ADCRL if the previous data is in the process of being read while in 10-bit MODE (the ADCRH register has been read but the ADCRL register has not). When blocking is active, the data transfer is blocked, COCO is not set, and the new result is lost. In the case of single conversions with the compare function enabled and the compare condition false, blocking has no effect and ADC operation is terminated. In all other cases of operation, when a data transfer is blocked, another conversion is initiated regardless of the state of ADCO (single or continuous conversions enabled).

If single conversions are enabled, the blocking mechanism could result in several discarded conversions and excess power consumption. To avoid this issue, the data registers must not be read after initiating a single conversion until the conversion completes.

9.5.4.3 Aborting Conversions

Any conversion in progress will be aborted when:

- A write to ADCSC1 occurs (the current conversion will be aborted and a new conversion will be initiated, if ADCH are not all 1s).
- A write to ADCSC2, ADCCFG, ADCCVH, or ADCCVL occurs. This indicates a mode of operation change has occurred and the current conversion is therefore invalid.
- The MCU is reset.
- The MCU enters stop mode with ADACK not enabled.

When a conversion is aborted, the contents of the data registers, ADCRH and ADCRL, are not altered but continue to be the values transferred after the completion of the last successful conversion. In the case that the conversion was aborted by a reset, ADCRH and ADCRL return to their reset states.

9.5.4.4 Power Control

The ADC module remains in its idle state until a conversion is initiated. If ADACK is selected as the conversion clock source, the ADACK clock generator is also enabled.

Power consumption when active can be reduced by setting ADLPC. This results in a lower maximum value for f_{ADCK} (see the electrical specifications).

9.5.4.5 Total Conversion Time

The total conversion time depends on the sample time (as determined by ADLSMP), the MCU bus frequency, the conversion mode (8-bit or 10-bit), and the frequency of the conversion clock (f_{ADCK}). After the module becomes active, sampling of the input begins. ADLSMP is used to select between short and long sample times.When sampling is complete, the converter is isolated from the input channel and a successive approximation algorithm is performed to determine the digital value of the analog signal. The

result of the conversion is transferred to ADCRH and ADCRL upon completion of the conversion algorithm.

If the bus frequency is less than the f_{ADCK} frequency, precise sample time for continuous conversions cannot be guaranteed when short sample is enabled (ADLSMP=0). If the bus frequency is less than 1/11th of the f_{ADCK} frequency, precise sample time for continuous conversions cannot be guaranteed when long sample is enabled (ADLSMP=1).

The maximum total conversion time for different conditions is summarized in Table 9-12.

Table 9-12. Total Conversion Time vs. Control Conditions

Conversion Type	ADICLK	ADLSMP	Max Total Conversion Time
Single or first continuous 8-bit	0x, 10	0	20 ADCK cycles + 5 bus clock cycles
Single or first continuous 10-bit	0x, 10	0	23 ADCK cycles + 5 bus clock cycles
Single or first continuous 8-bit	0x, 10	1	40 ADCK cycles + 5 bus clock cycles
Single or first continuous 10-bit	0x, 10	1	43 ADCK cycles + 5 bus clock cycles
Single or first continuous 8-bit	11	0	5 μs + 20 ADCK + 5 bus clock cycles
Single or first continuous 10-bit	11	0	5 μs + 23 ADCK + 5 bus clock cycles
Single or first continuous 8-bit	11	1	5 μs + 40 ADCK + 5 bus clock cycles
Single or first continuous 10-bit	11	1	5 μs + 43 ADCK + 5 bus clock cycles
Subsequent continuous 8-bit; $f_{BUS} \geq f_{ADCK}$	xx	0	17 ADCK cycles
Subsequent continuous 10-bit; $f_{BUS} \geq f_{ADCK}$	xx	0	20 ADCK cycles
Subsequent continuous 8-bit; $f_{BUS} \geq f_{ADCK}/11$	xx	1	37 ADCK cycles
Subsequent continuous 10-bit; $f_{BUS} \geq f_{ADCK}/11$	xx	1	40 ADCK cycles

The maximum total conversion time is determined by the clock source chosen and the divide ratio selected. The clock source is selectable by the ADICLK bits, and the divide ratio is specified by the ADIV bits. For example, in 10-bit mode, with the bus clock selected as the input clock source, the input clock divide-by-1 ratio selected, and a bus frequency of 8 MHz, then the conversion time for a single conversion is:

$$\text{Conversion time} = \frac{23 \text{ ADCK cyc}}{8 \text{ MHz}/1} + \frac{5 \text{ bus cyc}}{8 \text{ MHz}} = 3.5\ \mu\text{s}$$

$$\text{Number of bus cycles} = 3.5\ \mu\text{s} \times 8 \text{ MHz} = 28 \text{ cycles}$$

NOTE

The ADCK frequency must be between f_{ADCK} minimum and f_{ADCK} maximum to meet ADC specifications.

9.5.5 Automatic Compare Function

The compare function can be configured to check for either an upper limit or lower limit. After the input is sampled and converted, the result is added to the two's complement of the compare value (ADCCVH and ADCCVL). When comparing to an upper limit (ACFGT = 1), if the result is greater-than or equal-to the compare value, COCO is set. When comparing to a lower limit (ACFGT = 0), if the result is less than the compare value, COCO is set. The value generated by the addition of the conversion result and the two's complement of the compare value is transferred to ADCRH and ADCRL.

Upon completion of a conversion while the compare function is enabled, if the compare condition is not true, COCO is not set and no data is transferred to the result registers. An ADC interrupt is generated upon the setting of COCO if the ADC interrupt is enabled (AIEN = 1).

NOTE

The compare function can be used to monitor the voltage on a channel while the MCU is in either wait or stop3 mode. The ADC interrupt will wake the MCU when the compare condition is met.

9.5.6 MCU Wait Mode Operation

The WAIT instruction puts the MCU in a lower power-consumption standby mode from which recovery is very fast because the clock sources remain active. If a conversion is in progress when the MCU enters wait mode, it continues until completion. Conversions can be initiated while the MCU is in wait mode by means of the hardware trigger or if continuous conversions are enabled.

The bus clock, bus clock divided by two, and ADACK are available as conversion clock sources while in wait mode. The use of ALTCLK as the conversion clock source in wait is dependent on the definition of ALTCLK for this MCU. Consult the module introduction for information on ALTCLK specific to this MCU.

A conversion complete event sets the COCO and generates an ADC interrupt to wake the MCU from wait mode if the ADC interrupt is enabled (AIEN = 1).

9.5.7 MCU Stop3 Mode Operation

The STOP instruction is used to put the MCU in a low power-consumption standby mode during which most or all clock sources on the MCU are disabled.

9.5.7.1 Stop3 Mode With ADACK Disabled

If the asynchronous clock, ADACK, is not selected as the conversion clock, executing a STOP instruction aborts the current conversion and places the ADC in its idle state. The contents of ADCRH and ADCRL are unaffected by stop3 mode.After exiting from stop3 mode, a software or hardware trigger is required to resume conversions.

9.5.7.2 Stop3 Mode With ADACK Enabled

If ADACK is selected as the conversion clock, the ADC continues operation during stop3 mode. For guaranteed ADC operation, the MCU's voltage regulator must remain active during stop3 mode. Consult the module introduction for configuration information for this MCU.

If a conversion is in progress when the MCU enters stop3 mode, it continues until completion. Conversions can be initiated while the MCU is in stop3 mode by means of the hardware trigger or if continuous conversions are enabled.

A conversion complete event sets the COCO and generates an ADC interrupt to wake the MCU from stop3 mode if the ADC interrupt is enabled (AIEN = 1).

NOTE

It is possible for the ADC module to wake the system from low power stop and cause the MCU to begin consuming run-level currents without generating a system level interrupt. To prevent this scenario, software should ensure that the data transfer blocking mechanism (discussed in Section 9.5.4.2, "Completing Conversions) is cleared when entering stop3 and continuing ADC conversions.

9.5.8 MCU Stop1 and Stop2 Mode Operation

The ADC module is automatically disabled when the MCU enters either stop1 or stop2 mode. All module registers contain their reset values following exit from stop1 or stop2. Therefore the module must be re-enabled and re-configured following exit from stop1 or stop2.

9.6 Initialization Information

This section gives an example which provides some basic direction on how a user would initialize and configure the ADC module. The user has the flexibility of choosing between configuring the module for 8-bit or 10-bit resolution, single or continuous conversion, and a polled or interrupt approach, among many other options. Refer to Table 9-6, Table 9-7, and Table 9-8 for information used in this example.

NOTE

Hexadecimal values designated by a preceding 0x, binary values designated by a preceding %, and decimal values have no preceding character.

9.6.1 ADC Module Initialization Example

9.6.1.1 Initialization Sequence

Before the ADC module can be used to complete conversions, an initialization procedure must be performed. A typical sequence is as follows:

1. Update the configuration register (ADCCFG) to select the input clock source and the divide ratio used to generate the internal clock, ADCK. This register is also used for selecting sample time and low-power configuration.

2. Update status and control register 2 (ADCSC2) to select the conversion trigger (hardware or software) and compare function options, if enabled.
3. Update status and control register 1 (ADCSC1) to select whether conversions will be continuous or completed only once, and to enable or disable conversion complete interrupts. The input channel on which conversions will be performed is also selected here.

9.6.1.2 Pseudo — Code Example

In this example, the ADC module will be set up with interrupts enabled to perform a single 10-bit conversion at low power with a long sample time on input channel 1, where the internal ADCK clock will be derived from the bus clock divided by 1.

ADCCFG = 0x98 (%10011000)

Bit 7	ADLPC	1	Configures for low power (lowers maximum clock speed)
Bit 6:5	ADIV	00	Sets the ADCK to the input clock ÷ 1
Bit 4	ADLSMP	1	Configures for long sample time
Bit 3:2	MODE	10	Sets mode at 10-bit conversions
Bit 1:0	ADICLK	00	Selects bus clock as input clock source

ADCSC2 = 0x00 (%00000000)

Bit 7	ADACT	0	Flag indicates if a conversion is in progress
Bit 6	ADTRG	0	Software trigger selected
Bit 5	ACFE	0	Compare function disabled
Bit 4	ACFGT	0	Not used in this example
Bit 3:2		00	Unimplemented or reserved, always reads zero
Bit 1:0		00	Reserved for internal use; always write zero

ADCSC1 = 0x41 (%01000001)

Bit 7	COCO	0	Read-only flag which is set when a conversion completes
Bit 6	AIEN	1	Conversion complete interrupt enabled
Bit 5	ADCO	0	One conversion only (continuous conversions disabled)
Bit 4:0	ADCH	00001	Input channel 1 selected as ADC input channel

ADCRH/L = 0xxx

Holds results of conversion. Read high byte (ADCRH) before low byte (ADCRL) so that conversion data cannot be overwritten with data from the next conversion.

ADCCVH/L = 0xxx

Holds compare value when compare function enabled

APCTL1=0x02

AD1 pin I/O control disabled. All other AD pins remain general purpose I/O pins

APCTL2=0x00

All other AD pins remain general purpose I/O pins

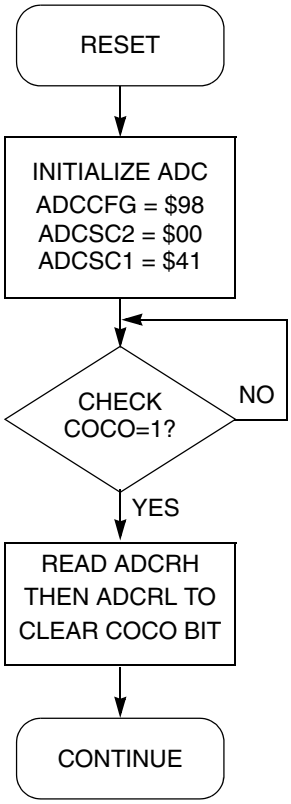

Figure 9-14. Initialization Flowchart for Example

9.7 Application Information

This section contains information for using the ADC module in applications. The ADC has been designed to be integrated into a microcontroller for use in embedded control applications requiring an A/D converter.

9.7.1 External Pins and Routing

The following sections discuss the external pins associated with the ADC module and how they should be used for best results.

9.7.1.1 Analog Supply Pins

The ADC module has analog power and ground supplies (V_{DDAD} and V_{SSAD}) which are available as separate pins on some devices. On other devices, V_{SSAD} is shared on the same pin as the MCU digital V_{SS}, and on others, both V_{SSAD} and V_{DDAD} are shared with the MCU digital supply pins. In these cases, there are separate pads for the analog supplies which are bonded to the same pin as the corresponding digital supply so that some degree of isolation between the supplies is maintained.

When available on a separate pin, both V_{DDAD} and V_{SSAD} must be connected to the same voltage potential as their corresponding MCU digital supply (V_{DD} and V_{SS}) and must be routed carefully for maximum noise immunity and bypass capacitors placed as near as possible to the package.

In cases where separate power supplies are used for analog and digital power, the ground connection between these supplies must be at the V_{SSAD} pin. This should be the only ground connection between these supplies if possible. The V_{SSAD} pin makes a good single point ground location.

9.7.1.2 Analog Reference Pins

In addition to the analog supplies, the ADC module has connections for two reference voltage inputs. The high reference is V_{REFH}, which may be shared on the same pin as V_{DDAD} on some devices. The low reference is V_{REFL}, which may be shared on the same pin as V_{SSAD} on some devices.

When available on a separate pin, V_{REFH} may be connected to the same potential as V_{DDAD}, or may be driven by an external source that is between the minimum V_{DDAD} spec and the V_{DDAD} potential (V_{REFH} must never exceed V_{DDAD}). When available on a separate pin, V_{REFL} must be connected to the same voltage potential as V_{SSAD}. Both V_{REFH} and V_{REFL} must be routed carefully for maximum noise immunity and bypass capacitors placed as near as possible to the package.

AC current in the form of current spikes required to supply charge to the capacitor array at each successive approximation step is drawn through the V_{REFH} and V_{REFL} loop. The best external component to meet this current demand is a 0.1 μF capacitor with good high frequency characteristics. This capacitor is connected between V_{REFH} and V_{REFL} and must be placed as near as possible to the package pins. Resistance in the path is not recommended because the current will cause a voltage drop which could result in conversion errors. Inductance in this path must be minimum (parasitic only).

9.7.1.3 Analog Input Pins

The external analog inputs are typically shared with digital I/O pins on MCU devices. The pin I/O control is disabled by setting the appropriate control bit in one of the pin control registers. Conversions can be performed on inputs without the associated pin control register bit set. It is recommended that the pin control register bit always be set when using a pin as an analog input. This avoids problems with contention because the output buffer will be in its high impedance state and the pullup is disabled. Also, the input buffer draws dc current when its input is not at either V_{DD} or V_{SS}. Setting the pin control register bits for all pins used as analog inputs should be done to achieve lowest operating current.

Empirical data shows that capacitors on the analog inputs improve performance in the presence of noise or when the source impedance is high. Use of 0.01 μF capacitors with good high-frequency characteristics is sufficient. These capacitors are not necessary in all cases, but when used they must be placed as near as possible to the package pins and be referenced to V_{SSA}.

For proper conversion, the input voltage must fall between V_{REFH} and V_{REFL}. If the input is equal to or exceeds V_{REFH}, the converter circuit converts the signal to $3FF (full scale 10-bit representation) or $FF (full scale 8-bit representation). If the input is equal to or less than V_{REFL}, the converter circuit converts it to $000. Input voltages between V_{REFH} and V_{REFL} are straight-line linear conversions. There will be a brief current associated with V_{REFL} when the sampling capacitor is charging. The input is sampled for 3.5 cycles of the ADCK source when ADLSMP is low, or 23.5 cycles when ADLSMP is high.

For minimal loss of accuracy due to current injection, pins adjacent to the analog input pins should not be transitioning during conversions.

9.7.2 Sources of Error

Several sources of error exist for A/D conversions. These are discussed in the following sections.

9.7.2.1 Sampling Error

For proper conversions, the input must be sampled long enough to achieve the proper accuracy. Given the maximum input resistance of approximately 7kΩ and input capacitance of approximately 5.5 pF, sampling to within 1/4LSB (at 10-bit resolution) can be achieved within the minimum sample window (3.5 cycles @ 8 MHz maximum ADCK frequency) provided the resistance of the external analog source (R_{AS}) is kept below 5 kΩ.

Higher source resistances or higher-accuracy sampling is possible by setting ADLSMP (to increase the sample window to 23.5 cycles) or decreasing ADCK frequency to increase sample time.

9.7.2.2 Pin Leakage Error

Leakage on the I/O pins can cause conversion error if the external analog source resistance (R_{AS}) is high. If this error cannot be tolerated by the application, keep R_{AS} lower than V_{DDAD} / (2^N*I_{LEAK}) for less than 1/4LSB leakage error (N = 8 in 8-bit mode or 10 in 10-bit mode).

9.7.2.3 Noise-Induced Errors

System noise which occurs during the sample or conversion process can affect the accuracy of the conversion. The ADC accuracy numbers are guaranteed as specified only if the following conditions are met:

- There is a 0.1 μF low-ESR capacitor from V_{REFH} to V_{REFL}.
- There is a 0.1 μF low-ESR capacitor from V_{DDAD} to V_{SSAD}.
- If inductive isolation is used from the primary supply, an additional 1 μF capacitor is placed from V_{DDAD} to V_{SSAD}.
- V_{SSAD} (and V_{REFL}, if connected) is connected to V_{SS} at a quiet point in the ground plane.
- Operate the MCU in wait or stop3 mode before initiating (hardware triggered conversions) or immediately after initiating (hardware or software triggered conversions) the ADC conversion.
  - For software triggered conversions, immediately follow the write to the ADCSC1 with a WAIT instruction or STOP instruction.
  - For stop3 mode operation, select ADACK as the clock source. Operation in stop3 reduces V_{DD} noise but increases effective conversion time due to stop recovery.
- There is no I/O switching, input or output, on the MCU during the conversion.

There are some situations where external system activity causes radiated or conducted noise emissions or excessive V_{DD} noise is coupled into the ADC. In these situations, or when the MCU cannot be placed in wait or stop3 or I/O activity cannot be halted, these recommended actions may reduce the effect of noise on the accuracy:

- Place a 0.01 μF capacitor (C_{AS}) on the selected input channel to V_{REFL} or V_{SSAD} (this will improve noise issues but will affect sample rate based on the external analog source resistance).

- Average the result by converting the analog input many times in succession and dividing the sum of the results. Four samples are required to eliminate the effect of a 1LSB, one-time error.
- Reduce the effect of synchronous noise by operating off the asynchronous clock (ADACK) and averaging. Noise that is synchronous to ADCK cannot be averaged out.

9.7.2.4 Code Width and Quantization Error

The ADC quantizes the ideal straight-line transfer function into 1024 steps (in 10-bit mode). Each step ideally has the same height (1 code) and width. The width is defined as the delta between the transition points to one code and the next. The ideal code width for an N bit converter (in this case N can be 8 or 10), defined as 1LSB, is:

$$1_{LSB} = (V_{REFH} - V_{REFL}) / 2^N \qquad \textit{Eqn. 9-2}$$

There is an inherent quantization error due to the digitization of the result. For 8-bit or 10-bit conversions the code will transition when the voltage is at the midpoint between the points where the straight line transfer function is exactly represented by the actual transfer function. Therefore, the quantization error will be ± 1/2LSB in 8- or 10-bit mode. As a consequence, however, the code width of the first ($000) conversion is only 1/2LSB and the code width of the last ($FF or $3FF) is 1.5LSB.

9.7.2.5 Linearity Errors

The ADC may also exhibit non-linearity of several forms. Every effort has been made to reduce these errors but the system should be aware of them because they affect overall accuracy. These errors are:

- Zero-scale error (E_{ZS}) (sometimes called offset) — This error is defined as the difference between the actual code width of the first conversion and the ideal code width (1/2LSB). Note, if the first conversion is $001, then the difference between the actual $001 code width and its ideal (1LSB) is used.
- Full-scale error (E_{FS}) — This error is defined as the difference between the actual code width of the last conversion and the ideal code width (1.5LSB). Note, if the last conversion is $3FE, then the difference between the actual $3FE code width and its ideal (1LSB) is used.
- Differential non-linearity (DNL) — This error is defined as the worst-case difference between the actual code width and the ideal code width for all conversions.
- Integral non-linearity (INL) — This error is defined as the highest-value the (absolute value of the) running sum of DNL achieves. More simply, this is the worst-case difference of the actual transition voltage to a given code and its corresponding ideal transition voltage, for all codes.
- Total unadjusted error (TUE) — This error is defined as the difference between the actual transfer function and the ideal straight-line transfer function, and therefore includes all forms of error.

9.7.2.6 Code Jitter, Non-Monotonicity and Missing Codes

Analog-to-digital converters are susceptible to three special forms of error. These are code jitter, non-monotonicity, and missing codes.

Code jitter is when, at certain points, a given input voltage converts to one of two values when sampled repeatedly. Ideally, when the input voltage is infinitesimally smaller than the transition voltage, the

converter yields the lower code (and vice-versa). However, even very small amounts of system noise can cause the converter to be indeterminate (between two codes) for a range of input voltages around the transition voltage. This range is normally around ±1/2 LSB and will increase with noise. This error may be reduced by repeatedly sampling the input and averaging the result. Additionally the techniques discussed in Section 9.7.2.3 will reduce this error.

Non-monotonicity is defined as when, except for code jitter, the converter converts to a lower code for a higher input voltage. Missing codes are those values which are never converted for any input value.

In 8-bit or 10-bit mode, the ADC is guaranteed to be monotonic and to have no missing codes.

Chapter 10
Internal Clock Generator (S08ICGV4)

10.1 Introduction

The ICG provides multiple options for clock sources. This offers a user great flexibility when making choices between cost, precision, current draw, and performance. As seen in Figure 10-2, the ICG consists of four functional blocks. Each of these is briefly described here and then in more detail in a later section.

- **Oscillator block** — The oscillator block provides means for connecting an external crystal or resonator. Two frequency ranges are software selectable to allow optimal startup and stability. Alternatively, the oscillator block can be used to route an external square wave to the system clock. External sources can provide a very precise clock source. The oscillator is capable of being configured for low power mode or high amplitude mode as selected by HGO.
- **Internal reference generator** — The internal reference generator consists of two controlled clock sources. One is designed to be approximately 8 MHz and can be selected as a local clock for the background debug controller. The other internal reference clock source is typically 243 kHz and can be trimmed for finer accuracy via software when a precise timed event is input to the MCU. This provides a highly reliable, low-cost clock source.
- **Frequency-locked loop** — A frequency-locked loop (FLL) stage takes either the internal or external clock source and multiplies it to a higher frequency. Status bits provide information when the circuit has achieved lock and when it falls out of lock. Additionally, this block can monitor the external reference clock and signals whether the clock is valid or not.
- **Clock select block** — The clock select block provides several switch options for connecting different clock sources to the system clock tree. ICGDCLK is the multiplied clock frequency out of the FLL, ICGERCLK is the reference clock frequency from the crystal or external clock source, and FFE (fixed frequency enable) is a control signal used to control the system fixed frequency clock (XCLK). ICGLCLK is the clock source for the background debug controller (BDC).

The internal clock generation (ICG) module is used to generate the system clocks for the MC9S08AC60 Series MCU. A diagram of the System Clock Distribution is provide in the figure below.

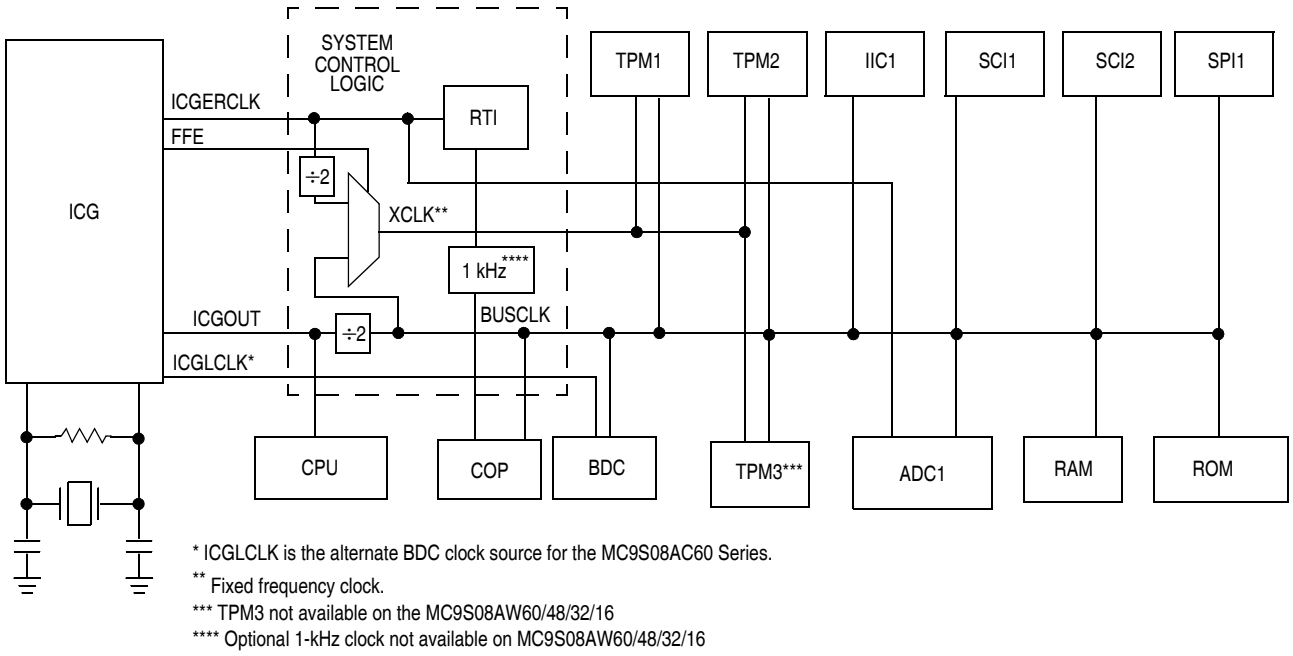

Figure 10-1. System Clock Distribution Diagram

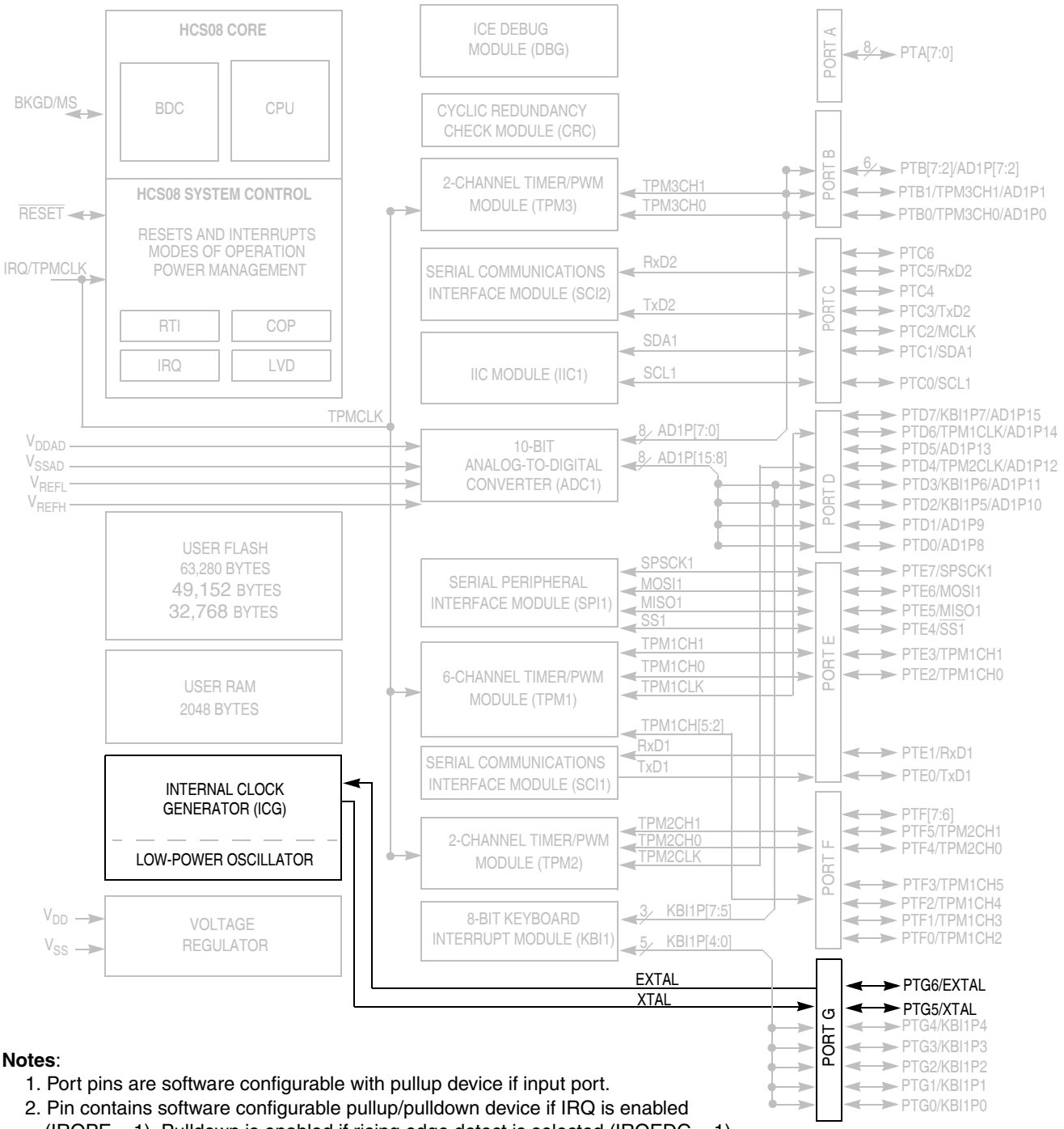

Notes:

1. Port pins are software configurable with pullup device if input port.
2. Pin contains software configurable pullup/pulldown device if IRQ is enabled (IRQPE = 1). Pulldown is enabled if rising edge detect is selected (IRQEDG = 1)
3. Pin contains integrated pullup device.
4. PTD3, PTD2, PTD7, and PTG4 contain both pullup and pulldown devices. Pulldown enabled when KBI is enabled (KBIPEn = 1) and rising edge is selected (KBEDGn = 1).
5. TPMCLK, TPM1CLK, and TPM2CLK options are configured via software; out of reset, TPM1CLK, TPM2CLK, and TPMCLK are available to TPM1, TPM2, and TPM3 respectively.

Figure 10-2. Block Diagram Highlighting ICG Module

10.1.1 Features

The module is intended to be very user friendly with many of the features occurring automatically without user intervention. To quickly configure the module, go to Section 10.5, "Initialization/Application Information" and pick an example that best suits the application needs.

Features of the ICG and clock distribution system:

- Several options for the primary clock source allow a wide range of cost, frequency, and precision choices:
  - 32 kHz–100 kHz crystal or resonator
  - 1 MHz–16 MHz crystal or resonator
  - External clock
  - Internal reference generator
- Defaults to self-clocked mode to minimize startup delays
- Frequency-locked loop (FLL) generates 8 MHz to 40 MHz (for bus rates up to 20 MHz)
  - Uses external or internal clock as reference frequency
- Automatic lockout of non-running clock sources
- Reset or interrupt on loss of clock or loss of FLL lock
- Digitally-controlled oscillator (DCO) preserves previous frequency settings, allowing fast frequency lock when recovering from stop3 mode
- DCO will maintain operating frequency during a loss or removal of reference clock
- Post-FLL divider selects 1 of 8 bus rate divisors (/1 through /128)
- Separate self-clocked source for real-time interrupt
- Trimmable internal clock source supports SCI communications without additional external components
- Automatic FLL engagement after lock is acquired
- External oscillator selectable for low power or high gain

10.1.2 Modes of Operation

This is a high-level description only. Detailed descriptions of operating modes are contained in Section 10.4, "Functional Description."

- Mode 1 — Off

  The output clock, ICGOUT, is static. This mode may be entered when the STOP instruction is executed.
- Mode 2 — Self-clocked (SCM)

  Default mode of operation that is entered immediately after reset. The ICG's FLL is open loop and the digitally controlled oscillator (DCO) is free running at a frequency set by the filter bits.
- Mode 3 — FLL engaged internal (FEI)

  In this mode, the ICG's FLL is used to create frequencies that are programmable multiples of the internal reference clock.

— FLL engaged internal unlocked is a transition state that occurs while the FLL is attempting to lock. The FLL DCO frequency is off target and the FLL is adjusting the DCO to match the target frequency.

— FLL engaged internal locked is a state that occurs when the FLL detects that the DCO is locked to a multiple of the internal reference.

- Mode 4 — FLL bypassed external (FBE)

  In this mode, the ICG is configured to bypass the FLL and use an external clock as the clock source.

- Mode 5 — FLL engaged external (FEE)

  The ICG's FLL is used to generate frequencies that are programmable multiples of the external clock reference.

  — FLL engaged external unlocked is a transition state that occurs while the FLL is attempting to lock. The FLL DCO frequency is off target and the FLL is adjusting the DCO to match the target frequency.

  — FLL engaged external locked is a state which occurs when the FLL detects that the DCO is locked to a multiple of the internal reference.

10.1.3 Block Diagram

Figure 10-3 is a top-level diagram that shows the functional organization of the internal clock generation (ICG) module. This section includes a general description and a feature list.

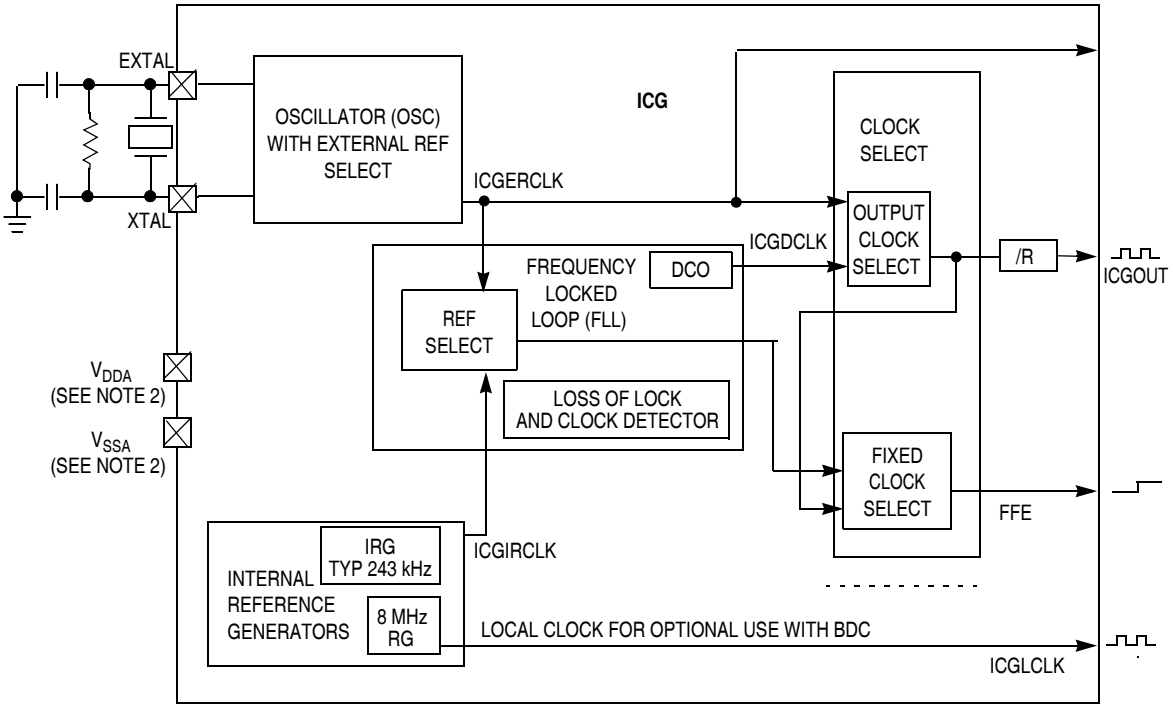

NOTES:
1. See Table 10-1 for specific use of ICGOUT, FFE, ICGLCLK, ICGERCLK
2. Not all HCS08 microcontrollers have unique supply pins for the ICG. See the device pin assignments.

Figure 10-3. ICG Block Diagram

10.2 External Signal Description

The oscillator pins are used to provide an external clock source for the MCU. The oscillator pins are gain controlled in low-power mode (default). Oscillator amplitudes in low-power mode are limited to approximately 1 V, peak-to-peak.

10.2.1 EXTAL — External Reference Clock / Oscillator Input

If upon the first write to ICGC1, either the FEE mode or FBE mode is selected, this pin functions as either the external clock input or the input of the oscillator circuit as determined by REFS. If upon the first write to ICGC1, either the FEI mode or SCM mode is selected, this pin is not used by the ICG.

10.2.2 XTAL — Oscillator Output

If upon the first write to ICGC1, either the FEE mode or FBE mode is selected, this pin functions as the output of the oscillator circuit. If upon the first write to ICGC1, either the FEI mode or SCM mode is selected, this pin is not used by the ICG. The oscillator is capable of being configured to provide a higher amplitude output for improved noise immunity. This mode of operation is selected by HGO = 1.

10.2.3 External Clock Connections

If an external clock is used, then the pins are connected as shown Figure 10-4.

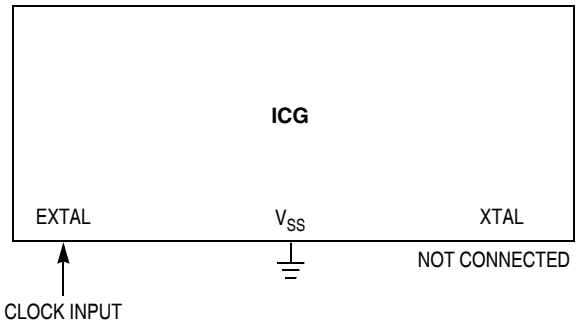

Figure 10-4. External Clock Connections

10.2.4 External Crystal/Resonator Connections

If an external crystal/resonator frequency reference is used, then the pins are connected as shown in Figure 10-5. Recommended component values are listed in the Electrical Characteristics chapter.

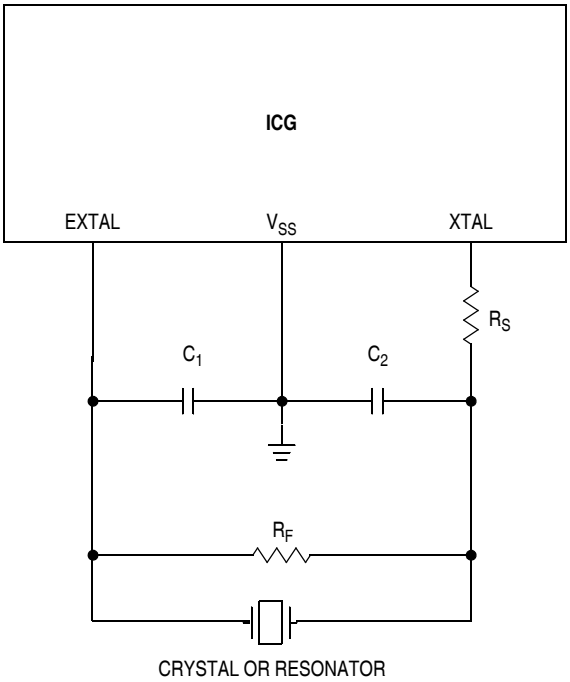

Figure 10-5. External Frequency Reference Connection

10.3 Register Definition

Refer to the direct-page register summary in the Memory chapter of this data sheet for the absolute address assignments for all ICG registers. This section refers to registers and control bits only by their names.

10.3.1 ICG Control Register 1 (ICGC1)

	7	6	5	4	3	2	1	0
R	HGO[1]	RANGE	REFS	CLKS		OSCSTEN	LOCD	0
W								
Reset	0	1	0	0	0	1	0	0

= Unimplemented or Reserved

Figure 10-6. ICG Control Register 1 (ICGC1)

[1] This bit can be written only once after reset. Additional writes are ignored.

Table 10-1. ICGC1 Register Field Descriptions

Field	Description
7 HGO	**High Gain Oscillator Select** — The HGO bit is used to select between low power operation and high gain operation for improved noise immunity. This bit is write-once after reset. 0 Oscillator configured for low power operation. 1 Oscillator configured for high gain operation.
6 RANGE	**Frequency Range Select** — The RANGE bit controls the oscillator, reference divider, and FLL loop prescaler multiplication factor (P). It selects one of two reference frequency ranges for the ICG. The RANGE bit is write-once after a reset. The RANGE bit only has an effect in FLL engaged external and FLL bypassed external modes. 0 Oscillator configured for low frequency range. FLL loop prescale factor P is 64. 1 Oscillator configured for high frequency range. FLL loop prescale factor P is 1.
5 REFS	**External Reference Select** — The REFS bit controls the external reference clock source for ICGERCLK. The REFS bit is write-once after a reset. 0 External clock requested. 1 Oscillator using crystal or resonator requested.
4:3 CLKS	**Clock Mode Select** — The CLKS bits control the clock mode as described below. If FLL bypassed external is requested, it will not be selected until ERCS = 1. If the ICG enters off mode, the CLKS bits will remain unchanged. Writes to the CLKS bits will not take effect if a previous write is not complete. 00 Self-clocked 01 FLL engaged, internal reference 10 FLL bypassed, external reference 11 FLL engaged, external reference The CLKS bits are writable at any time, unless the first write after a reset was CLKS = 0X, the CLKS bits cannot be written to 1X until after the next reset (because the EXTAL pin was not reserved).
2 OSCSTEN	**Enable Oscillator in Off Mode** — The OSCSTEN bit controls whether or not the oscillator circuit remains enabled when the ICG enters off mode. This bit has no effect if HGO = 1 and RANGE = 1. 0 Oscillator disabled when ICG is in off mode unless ENABLE is high, CLKS = 10, and REFST = 1. 1 Oscillator enabled when ICG is in off mode, CLKS = 1X and REFST = 1.
1 LOCD	**Loss of Clock Disable** 0 Loss of clock detection enabled. 1 Loss of clock detection disabled.

10.3.2 ICG Control Register 2 (ICGC2)

	7	6	5	4	3	2	1	0
R W	LOLRE	MFD			LOCRE	RFD		
Reset	0	0	0	0	0	0	0	0

Figure 10-7. ICG Control Register 2 (ICGC2)

Table 10-2. ICGC2 Register Field Descriptions

Field	Description
7 LOLRE	**Loss of Lock Reset Enable** — The LOLRE bit determines what type of request is made by the ICG following a loss of lock indication. The LOLRE bit only has an effect when LOLS is set. 0 Generate an interrupt request on loss of lock. 1 Generate a reset request on loss of lock.
6:4 MFD	**Multiplication Factor** — The MFD bits control the programmable multiplication factor in the FLL loop. The value specified by the MFD bits establishes the multiplication factor (N) applied to the reference frequency. Writes to the MFD bits will not take effect if a previous write is not complete. Select a low enough value for N such that $f_{ICGDCLK}$ does not exceed its maximum specified value. 000 Multiplication factor = 4 001 Multiplication factor = 6 010 Multiplication factor = 8 011 Multiplication factor = 10 100 Multiplication factor = 12 101 Multiplication factor = 14 110 Multiplication factor = 16 111 Multiplication factor = 18
3 LOCRE	**Loss of Clock Reset Enable** — The LOCRE bit determines how the system manages a loss of clock condition. 0 Generate an interrupt request on loss of clock. 1 Generate a reset request on loss of clock.
2:0 RFD	**Reduced Frequency Divider** — The RFD bits control the value of the divider following the clock select circuitry. The value specified by the RFD bits establishes the division factor (R) applied to the selected output clock source. Writes to the RFD bits will not take effect if a previous write is not complete. 000 Division factor = 1 001 Division factor = 2 010 Division factor = 4 011 Division factor = 8 100 Division factor = 16 101 Division factor = 32 110 Division factor = 64 111 Division factor = 128

10.3.3 ICG Status Register 1 (ICGS1)

	7	6	5	4	3	2	1	0
R	CLKST		REFST	LOLS	LOCK	LOCS	ERCS	ICGIF
W								1
Reset	0	0	0	0	0	0	0	0

= Unimplemented or Reserved

Figure 10-8. ICG Status Register 1 (ICGS1)

Table 10-3. ICGS1 Register Field Descriptions

Field	Description
7:6 CLKST	**Clock Mode Status** — The CLKST bits indicate the current clock mode. The CLKST bits don't update immediately after a write to the CLKS bits due to internal synchronization between clock domains. 00 Self-clocked 01 FLL engaged, internal reference 10 FLL bypassed, external reference 11 FLL engaged, external reference
5 REFST	**Reference Clock Status** — The REFST bit indicates which clock reference is currently selected by the Reference Select circuit. 0 External Clock selected. 1 Crystal/Resonator selected.
4 LOLS	**FLL Loss of Lock Status** — The LOLS bit is a sticky indication of FLL lock status. 0 FLL has not unexpectedly lost lock since LOLS was last cleared. 1 FLL has unexpectedly lost lock since LOLS was last cleared, LOLRE determines action taken.FLL has unexpectedly lost lock since LOLS was last cleared, LOLRE determines action taken.
3 LOCK	**FLL Lock Status** — The LOCK bit indicates whether the FLL has acquired lock. The LOCK bit is cleared in off, self-clocked, and FLL bypassed modes. 0 FLL is currently unlocked. 1 FLL is currently locked.
2 LOCS	**Loss Of Clock Status** — The LOCS bit is an indication of ICG loss of clock status. 0 ICG has not lost clock since LOCS was last cleared. 1 ICG has lost clock since LOCS was last cleared, LOCRE determines action taken.
1 ERCS	**External Reference Clock Status** — The ERCS bit is an indication of whether or not the external reference clock (ICGERCLK) meets the minimum frequency requirement. 0 External reference clock is not stable, frequency requirement is not met. 1 External reference clock is stable, frequency requirement is met.
0 ICGIF	**ICG Interrupt Flag** — The ICGIF read/write flag is set when an ICG interrupt request is pending. It is cleared by a reset or by reading the ICG status register when ICGIF is set and then writing a logic 1 to ICGIF. If another ICG interrupt occurs before the clearing sequence is complete, the sequence is reset so ICGIF would remain set after the clear sequence was completed for the earlier interrupt. Writing a logic 0 to ICGIF has no effect. 0 No ICG interrupt request is pending. 1 An ICG interrupt request is pending.

10.3.4 ICG Status Register 2 (ICGS2)

	7	6	5	4	3	2	1	0
R	0	0	0	0	0	0	0	DCOS
W								
Reset	0	0	0	0	0	0	0	0

= Unimplemented or Reserved

Figure 10-9. ICG Status Register 2 (ICGS2)

Table 10-4. ICGS2 Register Field Descriptions

Field	Description
0 DCOS	**DCO Clock Stable** — The DCOS bit is set when the DCO clock (ICG2DCLK) is stable, meaning the count error has not changed by more than n_{unlock} for two consecutive samples and the DCO clock is not static. This bit is used when exiting off state if CLKS = X1 to determine when to switch to the requested clock mode. It is also used in self-clocked mode to determine when to start monitoring the DCO clock. This bit is cleared upon entering the off state. 0 DCO clock is unstable. 1 DCO clock is stable.

10.3.5 ICG Filter Registers (ICGFLTU, ICGFLTL)

	7	6	5	4	3	2	1	0
R	0	0	0	0	FLT			
W								
Reset	0	0	0	0	0	0	0	0

= Unimplemented or Reserved

Figure 10-10. ICG Upper Filter Register (ICGFLTU)

Table 10-5. ICGFLTU Register Field Descriptions

Field	Description
3:0 FLT	**Filter Value** — The FLT bits indicate the current filter value, which controls the DCO frequency. The FLT bits are read only except when the CLKS bits are programmed to self-clocked mode (CLKS = 00). In self-clocked mode, any write to ICGFLTU updates the current 12-bit filter value. Writes to the ICGFLTU register will not affect FLT if a previous latch sequence is not complete.

	7	6	5	4	3	2	1	0
R W	FLT							
Reset	1	1	0	0	0	0	0	0

Figure 10-11. ICG Lower Filter Register (ICGFLTL)

Table 10-6. ICGFLTL Register Field Descriptions

Field	Description
7:0 FLT	**Filter Value** — The FLT bits indicate the current filter value, which controls the DCO frequency. The FLT bits are read only except when the CLKS bits are programmed to self-clocked mode (CLKS = 00). In self-clocked mode, any write to ICGFLTU updates the current 12-bit filter value. Writes to the ICGFLTU register will not affect FLT if a previous latch sequence is not complete. The filter registers show the filter value (FLT).

10.3.6 ICG Trim Register (ICGTRM)

	7	6	5	4	3	2	1	0
R W	TRIM							
POR	1	0	0	0	0	0	0	0
Reset:	U	U	U	U	U	U	U	U

U = Unaffected by MCU reset

Figure 10-12. ICG Trim Register (ICGTRM)

Table 10-7. ICGTRM Register Field Descriptions

Field	Description
7 TRIM	**ICG Trim Setting** — The TRIM bits control the internal reference generator frequency. They allow a ±25% adjustment of the nominal (POR) period. The bit's effect on period is binary weighted (i.e., bit 1 will adjust twice as much as changing bit 0). Increasing the binary value in TRIM will increase the period and decreasing the value will decrease the period.

10.4 Functional Description

This section provides a functional description of each of the five operating modes of the ICG. Also discussed are the loss of clock and loss of lock errors and requirements for entry into each mode. The ICG is very flexible, and in some configurations, it is possible to exceed certain clock specifications. When using the FLL, configure the ICG so that the frequency of ICGDCLK does not exceed its maximum value to ensure proper MCU operation.

10.4.1 Off Mode (Off)

Normally when the CPU enters stop mode, the ICG will cease all clock activity and is in the off state. However there are two cases to consider when clock activity continues while the CPU is in stop mode,

10.4.1.1 BDM Active

When the BDM is enabled, the ICG continues activity as originally programmed. This allows access to memory and control registers via the BDC controller.

10.4.1.2 OSCSTEN Bit Set

When the oscillator is enabled in stop mode (OSCSTEN = 1), the individual clock generators are enabled but the clock feed to the rest of the MCU is turned off. This option is provided to avoid long oscillator startup times if necessary, or to run the RTI from the oscillator during stop3.

10.4.1.3 Stop/Off Mode Recovery

Upon the CPU exiting stop mode due to an interrupt, the previously set control bits are valid and the system clock feed resumes. If FEE is selected, the ICG will source the internal reference until the external clock is stable. If FBE is selected, the ICG will wait for the external clock to stabilize before enabling ICGOUT.

Upon the CPU exiting stop mode due to a reset, the previously set ICG control bits are ignored and the default reset values applied. Therefore the ICG will exit stop in SCM mode configured for an approximately 8 MHz DCO output (4 MHz bus clock) with trim value maintained. If using a crystal, 4096 clocks are detected prior to engaging ICGERCLK. This is incorporated in crystal start-up time.

10.4.2 Self-Clocked Mode (SCM)

Self-clocked mode (SCM) is the default mode of operation and is entered when any of the following conditions occur:

- After any reset.
- Exiting from off mode when CLKS does not equal 10. If CLKS = X1, the ICG enters this state temporarily until the DCO is stable (DCOS = 1).
- CLKS bits are written from X1 to 00.
- CLKS = 1X and ICGERCLK is not detected (both ERCS = 0 and LOCS = 1).

In this state, the FLL loop is open. The DCO is on, and the output clock signal ICGOUT frequency is given by $f_{ICGDCLK}$ / R. The ICGDCLK frequency can be varied from 8 MHz to 40 MHz by writing a new value into the filter registers (ICGFLTH and ICGFLTL). This is the only mode in which the filter registers can be written.

If this mode is entered due to a reset, $f_{ICGDCLK}$ will default to f_{Self_reset} which is nominally 8 MHz. If this mode is entered from FLL engaged internal, $f_{ICGDCLK}$ will maintain the previous frequency.If this mode is entered from FLL engaged external (either by programming CLKS or due to a loss of external reference clock), $f_{ICGDCLK}$ will maintain the previous frequency, but ICGOUT will double if the FLL was unlocked. If this mode is entered from off mode, $f_{ICGDCLK}$ will be equal to the frequency of ICGDCLK before

entering off mode. If CLKS bits are set to 01 or 11 coming out of the Off state, the ICG enters this mode until ICGDCLK is stable as determined by the DCOS bit. After ICGDCLK is considered stable, the ICG automatically closes the loop by switching to FLL engaged (internal or external) as selected by the CLKS bits.

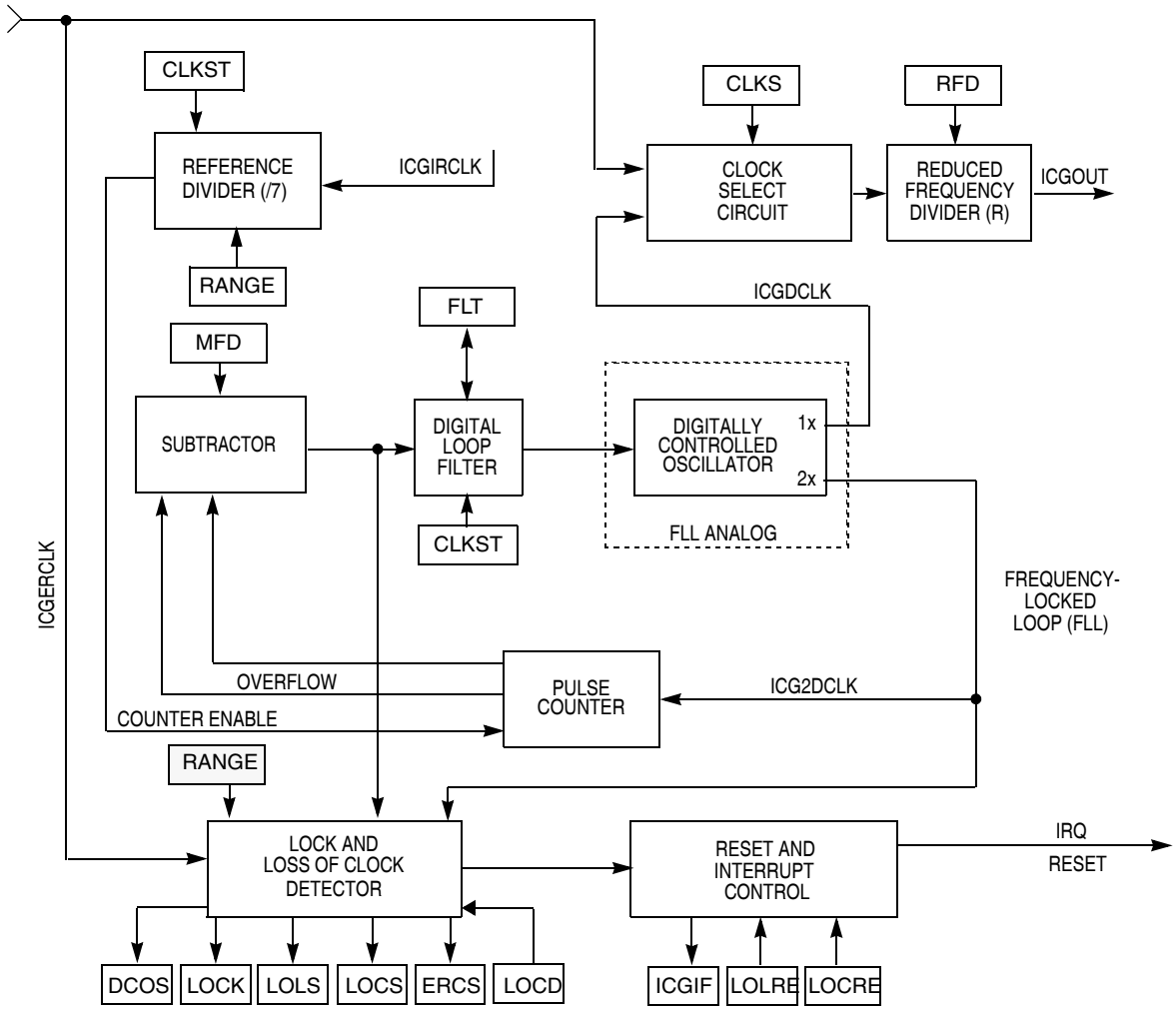

Figure 10-13. Detailed Frequency-Locked Loop Block Diagram

10.4.3 FLL Engaged, Internal Clock (FEI) Mode

FLL engaged internal (FEI) is entered when any of the following conditions occur:

- CLKS bits are written to 01
- The DCO clock stabilizes (DCOS = 1) while in SCM upon exiting the off state with CLKS = 01

In FLL engaged internal mode, the reference clock is derived from the internal reference clock ICGIRCLK, and the FLL loop will attempt to lock the ICGDCLK frequency to the desired value, as selected by the MFD bits.

10.4.4 FLL Engaged Internal Unlocked

FEI unlocked is a temporary state that is entered when FEI is entered and the count error (Δn) output from the subtractor is greater than the maximum n_{unlock} or less than the minimum n_{unlock}, as required by the lock detector to detect the unlock condition.

The ICG will remain in this state while the count error (Δn) is greater than the maximum n_{lock} or less than the minimum n_{lock}, as required by the lock detector to detect the lock condition.

In this state the output clock signal ICGOUT frequency is given by $f_{ICGDCLK}$ / R.

10.4.5 FLL Engaged Internal Locked

FLL engaged internal locked is entered from FEI unlocked when the count error (Δn), which comes from the subtractor, is less than n_{lock} (max) and greater than n_{lock} (min) for a given number of samples, as required by the lock detector to detect the lock condition. The output clock signal ICGOUT frequency is given by $f_{ICGDCLK}$ / R. In FEI locked, the filter value is updated only once every four comparison cycles. The update made is an average of the error measurements taken in the four previous comparisons.

10.4.6 FLL Bypassed, External Clock (FBE) Mode

FLL bypassed external (FBE) is entered when any of the following conditions occur:

- From SCM when CLKS = 10 and ERCS is high
- When CLKS = 10, ERCS = 1 upon entering off mode, and off is then exited
- From FLL engaged external mode if a loss of DCO clock occurs and the external reference remains valid (both LOCS = 1 and ERCS = 1)

In this state, the DCO and IRG are off and the reference clock is derived from the external reference clock, ICGERCLK. The output clock signal ICGOUT frequency is given by $f_{ICGERCLK}$ / R. If an external clock source is used (REFS = 0), then the input frequency on the EXTAL pin can be anywhere in the range 0 MHz to 40 MHz. If a crystal or resonator is used (REFS = 1), then frequency range is either low for RANGE = 0 or high for RANGE = 1.

10.4.7 FLL Engaged, External Clock (FEE) Mode

The FLL engaged external (FEE) mode is entered when any of the following conditions occur:

- CLKS = 11 and ERCS and DCOS are both high.
- The DCO stabilizes (DCOS = 1) while in SCM upon exiting the off state with CLKS = 11.

In FEE mode, the reference clock is derived from the external reference clock ICGERCLK, and the FLL loop will attempt to lock the ICGDCLK frequency to the desired value, as selected by the MFD bits. To run in FEE mode, there must be a working 32 kHz–100 kHz or 2 MHz–10 MHz external clock source. The maximum external clock frequency is limited to 10 MHz in FEE mode to prevent over-clocking the DCO. The minimum multiplier for the FLL, from Table 10-12 is 4. Because 4 X 10 MHz is 40MHz, which is the operational limit of the DCO, the reference clock cannot be any faster than 10 MHz.

10.4.7.1 FLL Engaged External Unlocked

FEE unlocked is entered when FEE is entered and the count error (Δn) output from the subtractor is greater than the maximum n_{unlock} or less than the minimum n_{unlock}, as required by the lock detector to detect the unlock condition.

The ICG will remain in this state while the count error (Δn) is greater than the maximum n_{lock} or less than the minimum n_{lock}, as required by the lock detector to detect the lock condition.

In this state, the pulse counter, subtractor, digital loop filter, and DCO form a closed loop and attempt to lock it according to their operational descriptions later in this section. Upon entering this state and until the FLL becomes locked, the output clock signal ICGOUT frequency is given by $f_{ICGDCLK}$ / (2×R) This extra divide by two prevents frequency overshoots during the initial locking process from exceeding chip-level maximum frequency specifications. After the FLL has locked, if an unexpected loss of lock causes it to re-enter the unlocked state while the ICG remains in FEE mode, the output clock signal ICGOUT frequency is given by $f_{ICGDCLK}$ / R.

10.4.7.2 FLL Engaged External Locked

FEE locked is entered from FEE unlocked when the count error (Δn) is less than n_{lock} (max) and greater than n_{lock} (min) for a given number of samples, as required by the lock detector to detect the lock condition. The output clock signal ICGOUT frequency is given by $f_{ICGDCLK}$/R. In FLL engaged external locked, the filter value is updated only once every four comparison cycles. The update made is an average of the error measurements taken in the four previous comparisons.

10.4.8 FLL Lock and Loss-of-Lock Detection

To determine the FLL locked and loss-of-lock conditions, the pulse counter counts the pulses of the DCO for one comparison cycle (see Table 10-9 for explanation of a comparison cycle) and passes this number to the subtractor. The subtractor compares this value to the value in MFD and produces a count error, Δn. To achieve locked status, Δn must be between n_{lock} (min) and n_{lock} (max). After the FLL has locked, Δn must stay between n_{unlock} (min) and n_{unlock} (max) to remain locked. If Δn goes outside this range unexpectedly, the LOLS status bit is set and remains set until cleared by software or until the MCU is reset. LOLS is cleared by reading ICGS1 then writing 1 to ICGIF (LOLRE = 0), or by a loss-of-lock induced reset (LOLRE = 1), or by any MCU reset.

If the ICG enters the off state due to stop mode when ENBDM = OSCSTEN = 0, the FLL loses locked status (LOCK is cleared), but LOLS remains unchanged because this is not an unexpected loss-of-lock condition. Though it would be unusual, if ENBDM is cleared to 0 while the MCU is in stop, the ICG enters the off state. Because this is an unexpected stopping of clocks, LOLS will be set when the MCU wakes up from stop.

Expected loss of lock occurs when the MFD or CLKS bits are changed or in FEI mode only, when the TRIM bits are changed. In these cases, the LOCK bit will be cleared until the FLL regains lock, but the LOLS will not be set.

10.4.9 FLL Loss-of-Clock Detection

The reference clock and the DCO clock are monitored under different conditions (see Table 10-8). Provided the reference frequency is being monitored, ERCS = 1 indicates that the reference clock meets minimum frequency requirements. When the reference and/or DCO clock(s) are being monitored, if either one falls below a certain frequency, f_{LOR} and f_{LOD}, respectively, the LOCS status bit will be set to indicate the error. LOCS will remain set until it is acknowledged or until the MCU is reset. LOCS is cleared by reading ICGS1 then writing 1 to ICGIF (LOCRE = 0), or by a loss-of-clock induced reset (LOCRE = 1), or by any MCU reset.

If the ICG is in FEE, a loss of reference clock causes the ICG to enter SCM, and a loss of DCO clock causes the ICG to enter FBE mode. If the ICG is in FBE mode, a loss of reference clock will cause the ICG to enter SCM. In each case, the CLKST and CLKS bits will be automatically changed to reflect the new state.

If the ICG is in FEE mode when a loss of clock occurs and the ERCS is still set to 1, then the CLKST bits are set to 10 and the ICG reverts to FBE mode.

A loss of clock will also cause a loss of lock when in FEE or FEI modes. Because the method of clearing the LOCS and LOLS bits is the same, this would only be an issue in the unlikely case that LOLRE = 1 and LOCRE = 0. In this case, the interrupt would be overridden by the reset for the loss of lock.

Table 10-8. Clock Monitoring (When LOCD = 0)

Mode	CLKS	REFST	ERCS	External Reference Clock Monitored?	DCO Clock Monitored?
Off	0X or 11	X	Forced Low	No	No
	10	0	Forced Low	No	No
	10	1	Real-Time[1]	Yes(1)	No
SCM (CLKST = 00)	0X	X	Forced Low	No	Yes[2]
	10	0	Forced High	No	Yes(2)
	10	1	Real-Time	Yes	Yes(2)
	11	X	Real-Time	Yes	Yes(2)
FEI (CLKST = 01)	0X	X	Forced Low	No	Yes
	11	X	Real-Time	Yes	Yes
FBE (CLKST = 10)	10	0	Forced High	No	No
	10	1	Real-Time	Yes	No
FEE (CLKST = 11)	11	X	Real-Time	Yes	Yes

1 If ENABLE is high (waiting for external crystal start-up after exiting stop).

2 DCO clock will not be monitored until DCOS = 1 upon entering SCM from off or FLL bypassed external mode.

10.4.10 Clock Mode Requirements

A clock mode is requested by writing to CLKS1:CLKS0 and the actual clock mode is indicated by CLKST1:CLKST0. Provided minimum conditions are met, the status shown in CLKST1:CLKST0 should be the same as the requested mode in CLKS1:CLKS0. Table 10-9 shows the relationship between CLKS, CLKST, and ICGOUT. It also shows the conditions for CLKS = CLKST or the reason CLKS ≠ CLKST.

NOTE

If a crystal will be used before the next reset, then be sure to set REFS = 1 and CLKS = 1x on the first write to the ICGC1 register. Failure to do so will result in "locking" REFS = 0 which will prevent the oscillator amplifier from being enabled until the next reset occurs.

Table 10-9. ICG State Table

Actual Mode (CLKST)	Desired Mode (CLKS)	Range	Reference Frequency ($f_{REFERENCE}$)	Comparison Cycle Time	ICGOUT	Conditions[1] for CLKS = CLKST	Reason CLKS1 ≠ CLKST
Off (XX)	Off (XX)	X	0	—	0	—	—
	FBE (10)	X	0	—	0	—	ERCS = 0
SCM (00)	SCM (00)	X	$f_{ICGIRCLK}/7$[2]	$8/f_{ICGIRCLK}$	ICGDCLK/R	Not switching from FBE to SCM	—
	FEI (01)	0	$f_{ICGIRCLK}/7$(1)	$8/f_{ICGIRCLK}$	ICGDCLK/R	—	DCOS = 0
	FBE (10)	X	$f_{ICGIRCLK}/7$(1)	$8/f_{ICGIRCLK}$	ICGDCLK/R	—	ERCS = 0
	FEE (11)	X	$f_{ICGIRCLK}/7$(1)	$8/f_{ICGIRCLK}$	ICGDCLK/R	—	DCOS = 0 or ERCS = 0
FEI (01)	FEI (01)	0	$f_{ICGIRCLK}/7$	$8/f_{ICGIRCLK}$	ICGDCLK/R	DCOS = 1	—
	FEE (11)	X	$f_{ICGIRCLK}/7$	$8/f_{ICGIRCLK}$	ICGDCLK/R	—	ERCS = 0
FBE (10)	FBE (10)	X	0	—	ICGERCLK/R	ERCS = 1	—
	FEE (11)	X	0	—	ICGERCLK/R	—	LOCS = 1 & ERCS = 1
FEE (11)	FEE (11)	0	$f_{ICGERCLK}$	$2/f_{ICGERCLK}$	ICGDCLK/R[3]	ERCS = 1 and DCOS = 1	—
		1	$f_{ICGERCLK}$	$128/f_{ICGERCLK}$	ICGDCLK/R(2)	ERCS = 1 and DCOS = 1	—

1 CLKST will not update immediately after a write to CLKS. Several bus cycles are required before CLKST updates to the new value.

2 The reference frequency has no effect on ICGOUT in SCM, but the reference frequency is still used in making the comparisons that determine the DCOS bit

3 After initial LOCK; will be ICGDCLK/2R during initial locking process and while FLL is re-locking after the MFD bits are changed.

10.4.11 Fixed Frequency Clock

The ICG provides a fixed frequency clock output, XCLK, for use by on-chip peripherals. This output is equal to the internal bus clock, BUSCLK, in all modes except FEE. In FEE mode, XCLK is equal to ICGERCLK ÷ 2 when the following conditions are met:

- $(P \times N) \div R \geq 4$ where P is determined by RANGE (see Table 10-11), N and R are determined by MFD and RFD respectively (see Table 10-12).
- LOCK = 1.

If the above conditions are not true, then XCLK is equal to BUSCLK.

When the ICG is in either FEI or SCM mode, XCLK is turned off. Any peripherals which can use XCLK as a clock source must not do so when the ICG is in FEI or SCM mode.

10.4.12 High Gain Oscillator

The oscillator has the option of running in a high gain oscillator (HGO) mode, which improves the oscillator's resistance to EMC noise when running in FBE or FEE modes. This option is selected by writing a 1 to the HGO bit in the ICGC1 register. HGO is used with both the high and low range oscillators but is only valid when REFS = 1 in the ICGC1 register. When HGO = 0, the standard low-power oscillator is selected. This bit is writable only once after any reset.

10.5 Initialization/Application Information

10.5.1 Introduction

The section is intended to give some basic direction on which configuration a user would want to select when initializing the ICG. For some applications, the serial communication link may dictate the accuracy of the clock reference. For other applications, lowest power consumption may be the chief clock consideration. Still others may have lowest cost as the primary goal. The ICG allows great flexibility in choosing which is best for any application.

Table 10-10. ICG Configuration Consideration

	Clock Reference Source = Internal	Clock Reference Source = External
FLL Engaged	**FEI** 4 MHz < f_{Bus} < 20 MHz. Medium power (will be less than FEE if oscillator range = high) Good clock accuracy (After IRG is trimmed) **Lowest system cost** (no external components required) IRG is on. DCO is on. [1]	**FEE** 4 MHz < f_{Bus} < 20 MHz Medium power (will be less than FEI if oscillator range = low) High clock accuracy Medium/High system cost (crystal, resonator or external clock source required) IRG is off. DCO is on.
FLL Bypassed	**SCM** This mode is mainly provided for quick and reliable system startup. 3 MHz < f_{Bus} < 5 MHz (default). 3 MHz < f_{Bus} < 20 MHz (via filter bits). Medium power Poor accuracy. IRG is off. DCO is on and open loop.	**FBE** f_{Bus} range ≤ 8 MHz when crystal or resonator is used. **Lowest power** Highest clock accuracy Medium/High system cost (Crystal, resonator or external clock source required) IRG is off. DCO is off.

[1] The IRG typically consumes 100 μA. The FLL and DCO typically consumes 0.5 to 2.5 mA, depending upon output frequency. For minimum power consumption and minimum jitter, choose N and R to be as small as possible.

The following sections contain initialization examples for various configurations.

NOTE

Hexadecimal values designated by a preceding $, binary values designated by a preceding %, and decimal values have no preceding character.

Important configuration information is repeated here for reference.

Table 10-11. ICGOUT Frequency Calculation Options

Clock Scheme	f_{ICGOUT}[1]	P	Note
SCM — self-clocked mode (FLL bypassed internal)	$f_{ICGDCLK}$ / R	NA	Typical f_{ICGOUT} = 8 MHz immediately after reset
FBE — FLL bypassed external	f_{ext} / R	NA	
FEI — FLL engaged internal	(f_{IRG} / 7)* 64 * N / R	64	Typical f_{IRG} = 243 kHz
FEE — FLL engaged external	f_{ext} * P * N / R	Range = 0 ; P = 64 Range = 1; P = 1	

[1] Ensure that $f_{ICGDCLK}$, which is equal to f_{ICGOUT} * R, does not exceed $f_{ICGDCLKmax}$.

Table 10-12. MFD and RFD Decode Table

MFD Value	Multiplication Factor (N)
000	4
001	6
010	8
011	10
100	12

RFD	Division Factor (R)
000	÷1
001	÷2
010	÷4
011	÷8
100	÷16

Table 10-12. MFD and RFD Decode Table

101	14
110	16
111	18

101	÷32
110	÷64
111	÷128

10.5.2 Example #1: External Crystal = 32 kHz, Bus Frequency = 4.19 MHz

In this example, the FLL will be used (in FEE mode) to multiply the external 32 kHz oscillator up to 8.38 MHz to achieve 4.19 MHz bus frequency.

After the MCU is released from reset, the ICG is in self-clocked mode (SCM) and supplies approximately 8 MHz on ICGOUT, which corresponds to a 4 MHz bus frequency (f_{Bus}).

The clock scheme will be FLL engaged, external (FEE). So

$$f_{ICGOUT} = f_{ext} * P * N / R \; ; \; P = 64, \; f_{ext} = 32 \text{ kHz} \qquad \textit{Eqn. 10-1}$$

Solving for N / R gives:

$$N / R = 8.38 \text{ MHz} / (32 \text{ kHz} * 64) = 4 \; ; \text{ we can choose } N = 4 \text{ and } R = 1 \qquad \textit{Eqn. 10-2}$$

The values needed in each register to set up the desired operation are:

ICGC1 = $38 (%00111000)

Bit 7	HGO	0	Configures oscillator for low power
Bit 6	RANGE	0	Configures oscillator for low-frequency range; FLL prescale factor is 64
Bit 5	REFS	1	Oscillator using crystal or resonator is requested
Bits 4:3	CLKS	11	FLL engaged, external reference clock mode
Bit 2	OSCSTEN	0	Oscillator disabled
Bit 1	LOCD	0	Loss-of-clock detection enabled
Bit 0		0	Unimplemented or reserved, always reads zero

ICGC2 = $00 (%00000000)

Bit 7	LOLRE	0	Generates an interrupt request on loss of lock
Bits 6:4	MFD	000	Sets the MFD multiplication factor to 4
Bit 3	LOCRE	0	Generates an interrupt request on loss of clock
Bits 2:0	RFD	000	Sets the RFD division factor to ÷1

ICGS1 = $xx

This is read only except for clearing interrupt flag

ICGS2 = $xx

This is read only; should read DCOS = 1 before performing any time critical tasks

ICGFLTLU/L = $xx

Only needed in self-clocked mode; FLT will be adjusted by loop to give 8.38 MHz DCO clock
Bits 15:12 unused 0000

Bits 11:0 FLT No need for user initialization

ICGTRM = $xx

Bits 7:0 TRIM Only need to write when trimming internal oscillator; not used when external crystal is clock source

Figure 10-14 shows flow charts for three conditions requiring ICG initialization.

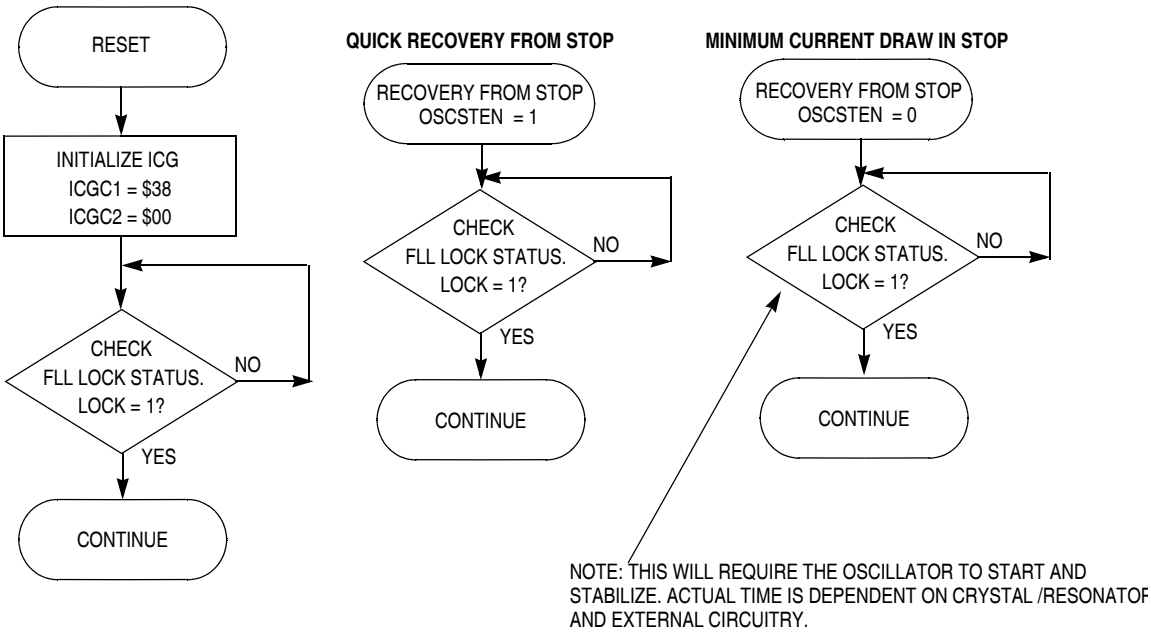

Figure 10-14. ICG Initialization for FEE in Example #1

10.5.3 Example #2: External Crystal = 4 MHz, Bus Frequency = 20 MHz

In this example, the FLL will be used (in FEE mode) to multiply the external 4 MHz oscillator up to 40-MHz to achieve 20 MHz bus frequency.

After the MCU is released from reset, the ICG is in self-clocked mode (SCM) and supplies approximately 8 MHz on ICGOUT which corresponds to a 4 MHz bus frequency (f_{Bus}).

During reset initialization software, the clock scheme will be set to FLL engaged, external (FEE). So

$$f_{ICGOUT} = f_{ext} * P * N / R \; ; \; P = 1, \; f_{ext} = 4.00 \text{ MHz} \qquad \textit{Eqn. 10-3}$$

Solving for N / R gives:

$$N / R = 40 \text{ MHz} / (4 \text{ MHz} * 1) = 10 \; ; \text{ We can choose } N = 10 \text{ and } R = 1 \qquad \textit{Eqn. 10-4}$$

The values needed in each register to set up the desired operation are:

ICGC1 = $78 (%01111000)

Bit 7	HGO	0	Configures oscillator for low power
Bit 6	RANGE	1	Configures oscillator for high-frequency range; FLL prescale factor is 1
Bit 5	REFS	1	Requests an oscillator
Bits 4:3	CLKS	11	FLL engaged, external reference clock mode
Bit 2	OSCSTEN	0	Disables the oscillator
Bit 1	LOCD	0	Loss-of-clock detection enabled
Bit 0		0	Unimplemented or reserved, always reads zero

ICGC2 = $30 (%00110000)

Bit 7	LOLRE	0	Generates an interrupt request on loss of lock
Bit 6:4	MFD	011	Sets the MFD multiplication factor to 10
Bit 3	LOCRE	0	Generates an interrupt request on loss of clock
Bit 2:0	RFD	000	Sets the RFD division factor to ÷1

ICGS1 = $xx

This is read only except for clearing interrupt flag

ICGS2 = $xx

This is read only. Should read DCOS before performing any time critical tasks

ICGFLTLU/L = $xx

Not used in this example

ICGTRM

Not used in this example

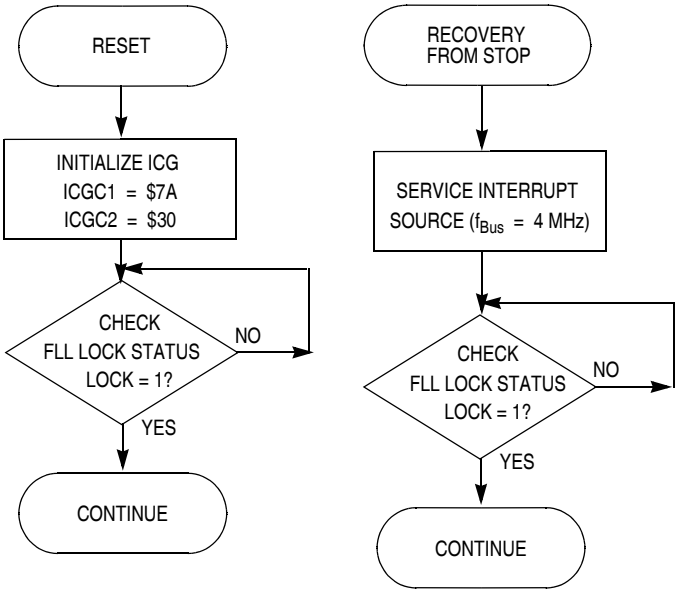

Figure 10-15. ICG Initialization and Stop Recovery for Example #2

10.5.4 Example #3: No External Crystal Connection, 5.4 MHz Bus Frequency

In this example, the FLL will be used (in FEI mode) to multiply the internal 243 kHz (approximate) reference clock up to 10.8 MHz to achieve 5.4 MHz bus frequency. This system will also use the trim function to fine tune the frequency based on an external reference signal.

After the MCU is released from reset, the ICG is in self-clocked mode (SCM) and supplies approximately 8 MHz on ICGOUT which corresponds to a 4 MHz bus frequency (f_{Bus}).

The clock scheme will be FLL engaged, internal (FEI). So

$$f_{ICGOUT} = (f_{IRG} / 7) * P * N / R \text{ ; } P = 64, \ f_{IRG} = 243 \text{ kHz} \qquad \textit{Eqn. 10-5}$$

Solving for N / R gives:

$$N / R = 10.8 \text{ MHz} /(243/7 \text{ kHz} * 64) = 4.86 \text{ ; We can choose } N = 10 \text{ and } R = 2. \qquad \textit{Eqn. 10-6}$$

A trim procedure will be required to hone the frequency to exactly 5.4 MHz. An example of the trim procedure is shown in example #4.

The values needed in each register to set up the desired operation are:

ICGC1 = $28 (%00101000)

Bit 7	HGO	0	Configures oscillator for low power
Bit 6	RANGE	0	Configures oscillator for low-frequency range; FLL prescale factor is 64
Bit 5	REFS	1	Oscillator using crystal or resonator requested (bit is really a don't care)
Bits 4:3	CLKS	01	FLL engaged, internal reference clock mode
Bit 2	OSCSTEN	0	Disables the oscillator
Bit 1	LOCD	0	Loss-of-clock enabled
Bit 0		0	Unimplemented or reserved, always reads zero

ICGC2 = $31 (%00110001)

Bit 7	LOLRE	0	Generates an interrupt request on loss of lock
Bit 6:4	MFD	011	Sets the MFD multiplication factor to 10
Bit 3	LOCRE	0	Generates an interrupt request on loss of clock
Bit 2:0	RFD	001	Sets the RFD division factor to ÷2

ICGS1 = $xx

This is read only except for clearing interrupt flag

ICGS2 = $xx

This is read only; good idea to read this before performing time critical operations

ICGFLTLU/L = $xx

Not used in this example

ICGTRM = $xx

Bit 7:0 TRIM Only need to write when trimming internal oscillator; done in separate operation (see example #4)

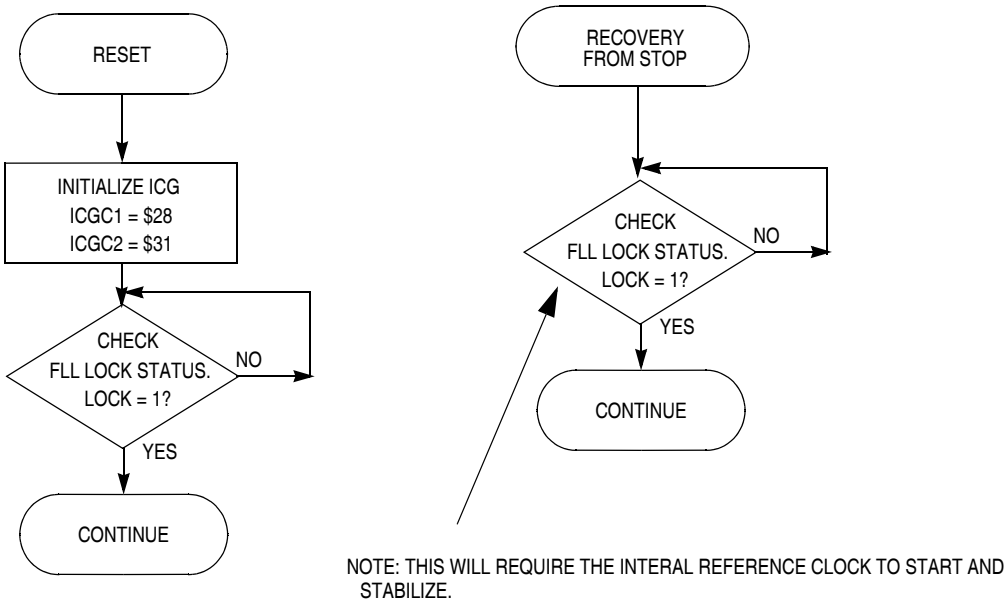

Figure 10-16. ICG Initialization and Stop Recovery for Example #3

10.5.5 Example #4: Internal Clock Generator Trim

The internally generated clock source is guaranteed to have a period ± 25% of the nominal value. In some cases, this may be sufficient accuracy. For other applications that require a tight frequency tolerance, a trimming procedure is provided that will allow a very accurate source. This section outlines one example of trimming the internal oscillator. Many other possible trimming procedures are valid and can be used.

Initial conditions:
1) Clock supplied from ATE has 500 μsec duty period
2) ICG configured for internal reference with 4 MHz bus

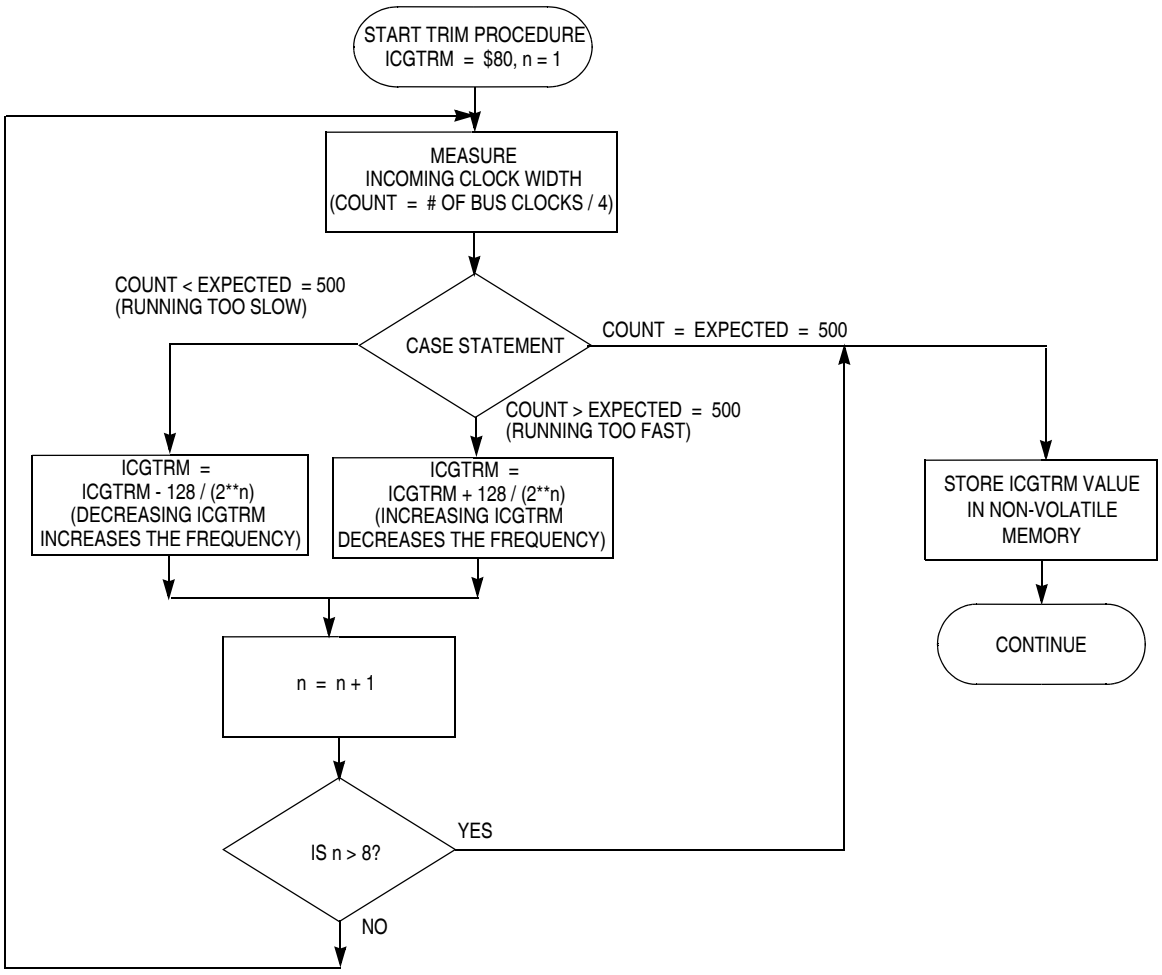

Figure 10-17. Trim Procedure

In this particular case, the MCU has been attached to a PCB and the entire assembly is undergoing final test with automated test equipment. A separate signal or message is provided to the MCU operating under user provided software control. The MCU initiates a trim procedure as outlined in Figure 10-17 while the tester supplies a precision reference signal.

If the intended bus frequency is near the maximum allowed for the device, it is recommended to trim using a reduction divisor (R) twice the final value. After the trim procedure is complete, the reduction divisor can be restored. This will prevent accidental overshoot of the maximum clock frequency.

Chapter 11
Inter-Integrated Circuit (S08IICV2)

11.1 Introduction

The inter-integrated circuit (IIC) provides a method of communication between a number of devices. The interface is designed to operate up to 100 kbps with maximum bus loading and timing. The device is capable of operating at higher baud rates, up to a maximum of clock/20, with reduced bus loading. The maximum communication length and the number of devices that can be connected are limited by a maximum bus capacitance of 400 pF.

For additional detail, please refer to volume 1 of the *HCS08 Reference Manual,* (Freescale Semiconductor document order number HCS08RMv1/D).

The MC9S08AC60 series of microcontrollers has an inter-integrated circuit (IIC) module for communication with other integrated circuits.

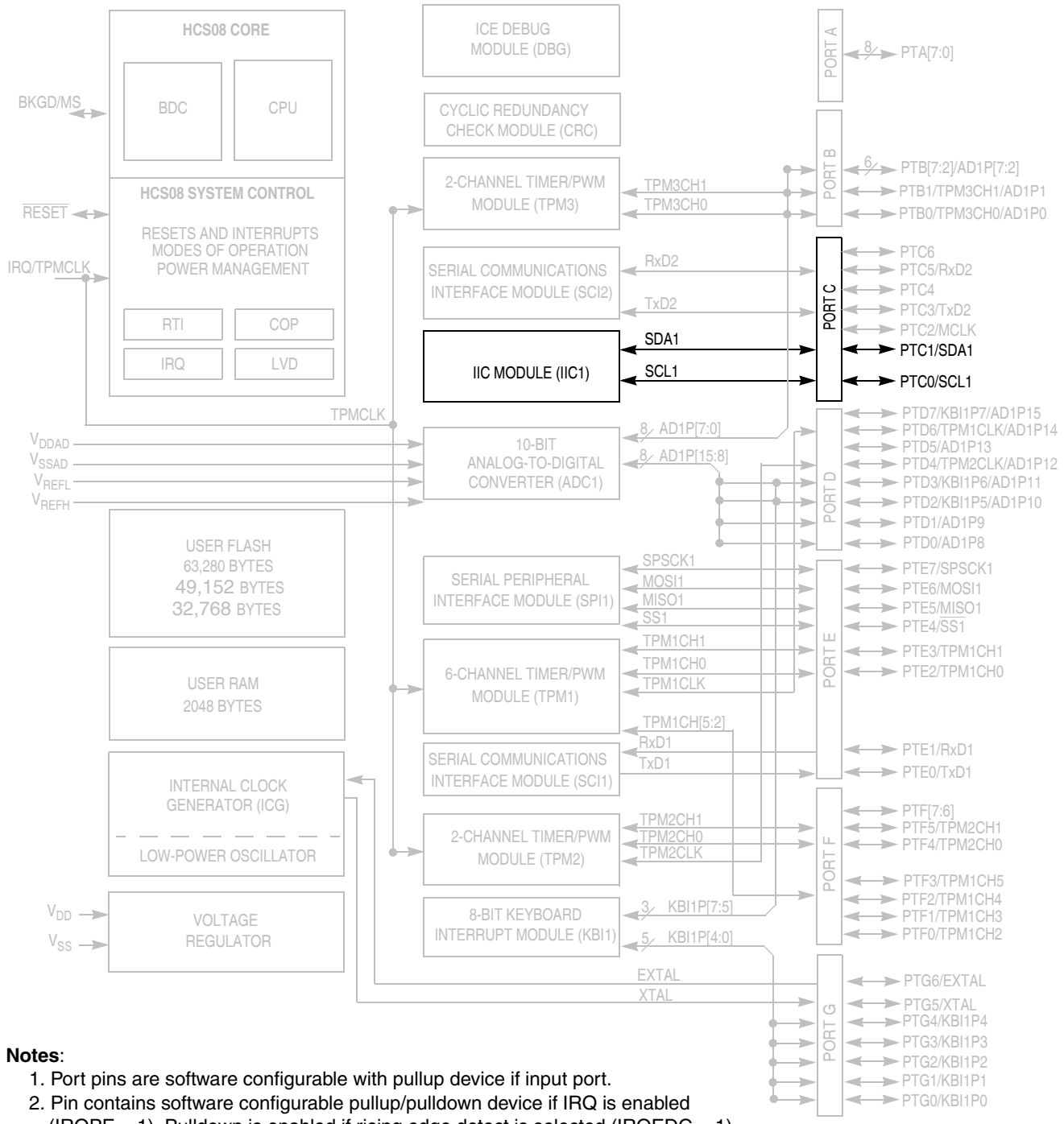

Notes:

1. Port pins are software configurable with pullup device if input port.
2. Pin contains software configurable pullup/pulldown device if IRQ is enabled (IRQPE = 1). Pulldown is enabled if rising edge detect is selected (IRQEDG = 1)
3. Pin contains integrated pullup device.
4. PTD3, PTD2, PTD7, and PTG4 contain both pullup and pulldown devices. Pulldown enabled when KBI is enabled (KBIPEn = 1) and rising edge is selected (KBEDGn = 1).
5. TPMCLK, TPM1CLK, and TPM2CLK options are configured via software; out of reset, TPM1CLK, TPM2CLK, and TPMCLK are available to TPM1, TPM2, and TPM3 respectively.

Figure 11-1. Block Diagram Highlighting the IIC Module

11.1.1 Features

The IIC includes these distinctive features:

- Compatible with IIC bus standard
- Multi-master operation
- Software programmable for one of 64 different serial clock frequencies
- Software selectable acknowledge bit
- Interrupt driven byte-by-byte data transfer
- Arbitration lost interrupt with automatic mode switching from master to slave
- Calling address identification interrupt
- Start and stop signal generation/detection
- Repeated start signal generation
- Acknowledge bit generation/detection
- Bus busy detection
- General call recognition
- 10-bit address extension

11.1.2 Modes of Operation

A brief description of the IIC in the various MCU modes is given here.

- **Run mode** — This is the basic mode of operation. To conserve power in this mode, disable the module.
- **Wait mode** — The module continues to operate while the MCU is in wait mode and can provide a wake-up interrupt.
- **Stop mode** — The IIC is inactive in stop3 mode for reduced power consumption. The stop instruction does not affect IIC register states. Stop2 resets the register contents.

11.1.3 Block Diagram

Figure 11-2 is a block diagram of the IIC.

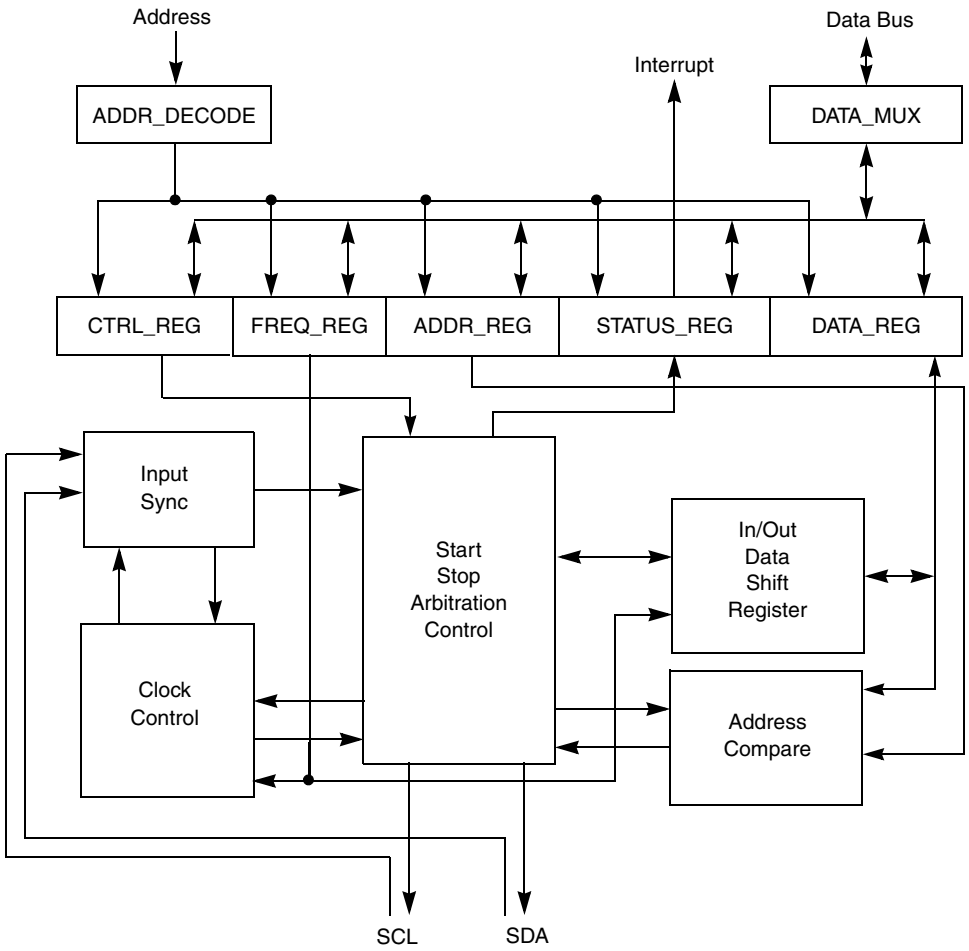

Figure 11-2. IIC Functional Block Diagram

11.2 External Signal Description

This section describes each user-accessible pin signal.

11.2.1 SCL — Serial Clock Line

The bidirectional SCL is the serial clock line of the IIC system.

11.2.2 SDA — Serial Data Line

The bidirectional SDA is the serial data line of the IIC system.

11.3 Register Definition

This section consists of the IIC register descriptions in address order.

Refer to the direct-page register summary in the memory chapter of this document for the absolute address assignments for all IIC registers. This section refers to registers and control bits only by their names. A

Freescale-provided equate or header file is used to translate these names into the appropriate absolute addresses.

11.3.1 IIC Address Register (IICA)

	7	6	5	4	3	2	1	0
R W	AD7	AD6	AD5	AD4	AD3	AD2	AD1	0
Reset	0	0	0	0	0	0	0	0

= Unimplemented or Reserved

Figure 11-3. IIC Address Register (IICA)

Table 11-1. IICA Field Descriptions

Field	Description
7–1 AD[7:1]	**Slave Address.** The AD[7:1] field contains the slave address to be used by the IIC module. This field is used on the 7-bit address scheme and the lower seven bits of the 10-bit address scheme.

11.3.2 IIC Frequency Divider Register (IICF)

	7	6	5	4	3	2	1	0
R W	MULT		ICR					
Reset	0	0	0	0	0	0	0	0

Figure 11-4. IIC Frequency Divider Register (IICF)

Table 11-2. IICF Field Descriptions

Field	Description
7–6 MULT	**IIC Multiplier Factor**. The MULT bits define the multiplier factor, mul. This factor, along with the SCL divider, generates the IIC baud rate. The multiplier factor mul as defined by the MULT bits is provided below. 00 mul = 01 01 mul = 02 10 mul = 04 11 Reserved
5–0 ICR	**IIC Clock Rate**. The ICR bits are used to prescale the bus clock for bit rate selection. These bits and the MULT bits determine the IIC baud rate, the SDA hold time, the SCL Start hold time, and the SCL Stop hold time. Table 11-4 provides the SCL divider and hold values for corresponding values of the ICR. The SCL divider multiplied by multiplier factor mul generates IIC baud rate. $\text{IIC baud rate} = \frac{\text{bus speed (Hz)}}{\text{mul} \times \text{SCLdivider}}$ ***Eqn. 11-1*** SDA hold time is the delay from the falling edge of SCL (IIC clock) to the changing of SDA (IIC data). SDA hold time = bus period (s) × mul × SDA hold value ***Eqn. 11-2*** SCL start hold time is the delay from the falling edge of SDA (IIC data) while SCL is high (Start condition) to the falling edge of SCL (IIC clock). SCL Start hold time = bus period (s) × mul × SCL Start hold value ***Eqn. 11-3*** SCL stop hold time is the delay from the rising edge of SCL (IIC clock) to the rising edge of SDA SDA (IIC data) while SCL is high (Stop condition). SCL Stop hold time = bus period (s) × mul × SCL Stop hold value ***Eqn. 11-4***

For example, if the bus speed is 8 MHz, the table below shows the possible hold time values with different ICR and MULT selections to achieve an IIC baud rate of 100kbps.

Table 11-3. Hold Time Values for 8 MHz Bus Speed

MULT	ICR	Hold Times (μs)		
		SDA	SCL Start	SCL Stop
0x2	0x00	3.500	3.000	5.500
0x1	0x07	2.500	4.000	5.250
0x1	0x0B	2.250	4.000	5.250
0x0	0x14	2.125	4.250	5.125
0x0	0x18	1.125	4.750	5.125

Table 11-4. IIC Divider and Hold Values

ICR (hex)	SCL Divider	SDA Hold Value	SCL Hold (Start) Value	SDA Hold (Stop) Value
00	20	7	6	11
01	22	7	7	12
02	24	8	8	13
03	26	8	9	14
04	28	9	10	15
05	30	9	11	16
06	34	10	13	18
07	40	10	16	21
08	28	7	10	15
09	32	7	12	17
0A	36	9	14	19
0B	40	9	16	21
0C	44	11	18	23
0D	48	11	20	25
0E	56	13	24	29
0F	68	13	30	35
10	48	9	18	25
11	56	9	22	29
12	64	13	26	33
13	72	13	30	37
14	80	17	34	41
15	88	17	38	45
16	104	21	46	53
17	128	21	58	65
18	80	9	38	41
19	96	9	46	49
1A	112	17	54	57
1B	128	17	62	65
1C	144	25	70	73
1D	160	25	78	81
1E	192	33	94	97
1F	240	33	118	121

ICR (hex)	SCL Divider	SDA Hold Value	SCL Hold (Start) Value	SCL Hold (Stop) Value
20	160	17	78	81
21	192	17	94	97
22	224	33	110	113
23	256	33	126	129
24	288	49	142	145
25	320	49	158	161
26	384	65	190	193
27	480	65	238	241
28	320	33	158	161
29	384	33	190	193
2A	448	65	222	225
2B	512	65	254	257
2C	576	97	286	289
2D	640	97	318	321
2E	768	129	382	385
2F	960	129	478	481
30	640	65	318	321
31	768	65	382	385
32	896	129	446	449
33	1024	129	510	513
34	1152	193	574	577
35	1280	193	638	641
36	1536	257	766	769
37	1920	257	958	961
38	1280	129	638	641
39	1536	129	766	769
3A	1792	257	894	897
3B	2048	257	1022	1025
3C	2304	385	1150	1153
3D	2560	385	1278	1281
3E	3072	513	1534	1537
3F	3840	513	1918	1921

11.3.3 IIC Control Register (IICC1)

	7	6	5	4	3	2	1	0
R	IICEN	IICIE	MST	TX	TXAK	0	0	0
W						RSTA		
Reset	0	0	0	0	0	0	0	0

= Unimplemented or Reserved

Figure 11-5. IIC Control Register (IICC1)

Table 11-5. IICC1 Field Descriptions

Field	Description
7 IICEN	**IIC Enable.** The IICEN bit determines whether the IIC module is enabled. 0 IIC is not enabled 1 IIC is enabled
6 IICIE	**IIC Interrupt Enable.** The IICIE bit determines whether an IIC interrupt is requested. 0 IIC interrupt request not enabled 1 IIC interrupt request enabled
5 MST	**Master Mode Select.** The MST bit changes from a 0 to a 1 when a start signal is generated on the bus and master mode is selected. When this bit changes from a 1 to a 0 a stop signal is generated and the mode of operation changes from master to slave. 0 Slave mode 1 Master mode
4 TX	**Transmit Mode Select.** The TX bit selects the direction of master and slave transfers. In master mode, this bit should be set according to the type of transfer required. Therefore, for address cycles, this bit is always high. When addressed as a slave, this bit should be set by software according to the SRW bit in the status register. 0 Receive 1 Transmit
3 TXAK	**Transmit Acknowledge Enable.** This bit specifies the value driven onto the SDA during data acknowledge cycles for master and slave receivers. 0 An acknowledge signal is sent out to the bus after receiving one data byte 1 No acknowledge signal response is sent
2 RSTA	**Repeat start.** Writing a 1 to this bit generates a repeated start condition provided it is the current master. This bit is always read as cleared. Attempting a repeat at the wrong time results in loss of arbitration.

11.3.4 IIC Status Register (IICS)

	7	6	5	4	3	2	1	0
R	TCF	IAAS	BUSY	ARBL	0	SRW	IICIF	RXAK
W								
Reset	1	0	0	0	0	0	0	0

= Unimplemented or Reserved

Figure 11-6. IIC Status Register (IICS)

Table 11-6. IICS Field Descriptions

Field	Description
7 TCF	**Transfer Complete Flag.** This bit is set on the completion of a byte transfer. This bit is only valid during or immediately following a transfer to the IIC module or from the IIC module.The TCF bit is cleared by reading the IICD register in receive mode or writing to the IICD in transmit mode. 0 Transfer in progress 1 Transfer complete
6 IAAS	**Addressed as a Slave.** The IAAS bit is set when the calling address matches the programmed slave address or when the GCAEN bit is set and a general call is received. Writing the IICC register clears this bit. 0 Not addressed 1 Addressed as a slave
5 BUSY	**Bus Busy.** The BUSY bit indicates the status of the bus regardless of slave or master mode. The BUSY bit is set when a start signal is detected and cleared when a stop signal is detected. 0 Bus is idle 1 Bus is busy
4 ARBL	**Arbitration Lost.** This bit is set by hardware when the arbitration procedure is lost. The ARBL bit must be cleared by software by writing a 1 to it. 0 Standard bus operation 1 Loss of arbitration
2 SRW	**Slave Read/Write.** When addressed as a slave, the SRW bit indicates the value of the R/W command bit of the calling address sent to the master. 0 Slave receive, master writing to slave 1 Slave transmit, master reading from slave
1 IICIF	**IIC Interrupt Flag.** The IICIF bit is set when an interrupt is pending. This bit must be cleared by software, by writing a 1 to it in the interrupt routine. One of the following events can set the IICIF bit: • One byte transfer completes • Match of slave address to calling address • Arbitration lost 0 No interrupt pending 1 Interrupt pending
0 RXAK	**Receive Acknowledge**. When the RXAK bit is low, it indicates an acknowledge signal has been received after the completion of one byte of data transmission on the bus. If the RXAK bit is high it means that no acknowledge signal is detected. 0 Acknowledge received 1 No acknowledge received

11.3.5 IIC Data I/O Register (IICD)

	7	6	5	4	3	2	1	0
R W	DATA							
Reset	0	0	0	0	0	0	0	0

Figure 11-7. IIC Data I/O Register (IICD)

Table 11-7. IICD Field Descriptions

Field	Description
7–0 DATA	**Data** — In master transmit mode, when data is written to the IICD, a data transfer is initiated. The most significant bit is sent first. In master receive mode, reading this register initiates receiving of the next byte of data.

NOTE

When transitioning out of master receive mode, the IIC mode should be switched before reading the IICD register to prevent an inadvertent initiation of a master receive data transfer.

In slave mode, the same functions are available after an address match has occurred.

The TX bit in IICC must correctly reflect the desired direction of transfer in master and slave modes for the transmission to begin. For instance, if the IIC is configured for master transmit but a master receive is desired, reading the IICD does not initiate the receive.

Reading the IICD returns the last byte received while the IIC is configured in master receive or slave receive modes. The IICD does not reflect every byte transmitted on the IIC bus, nor can software verify that a byte has been written to the IICD correctly by reading it back.

In master transmit mode, the first byte of data written to IICD following assertion of MST is used for the address transfer and should comprise of the calling address (in bit 7 to bit 1) concatenated with the required R/$\overline{W}$ bit (in position bit 0).

11.3.6 IIC Control Register 2 (IICC2)

	7	6	5	4	3	2	1	0
R	GCAEN	ADEXT	0	0	0	AD10	AD9	AD8
W								
Reset	0	0	0	0	0	0	0	0

= Unimplemented or Reserved

Figure 11-8. IIC Control Register (IICC2)

Table 11-8. IICC2 Field Descriptions

Field	Description
7 GCAEN	**General Call Address Enable.** The GCAEN bit enables or disables general call address. 0 General call address is disabled 1 General call address is enabled
6 ADEXT	**Address Extension.** The ADEXT bit controls the number of bits used for the slave address. 0 7-bit address scheme 1 10-bit address scheme
2–0 AD[10:8]	Slave Address. The AD[10:8] field contains the upper three bits of the slave address in the 10-bit address scheme. This field is only valid when the ADEXT bit is set.

11.4 Functional Description

This section provides a complete functional description of the IIC module.

11.4.1 IIC Protocol

The IIC bus system uses a serial data line (SDA) and a serial clock line (SCL) for data transfer. All devices connected to it must have open drain or open collector outputs. A logic AND function is exercised on both lines with external pull-up resistors. The value of these resistors is system dependent.

Normally, a standard communication is composed of four parts:

- Start signal
- Slave address transmission
- Data transfer
- Stop signal

The stop signal should not be confused with the CPU stop instruction. The IIC bus system communication is described briefly in the following sections and illustrated in Figure 11-9.

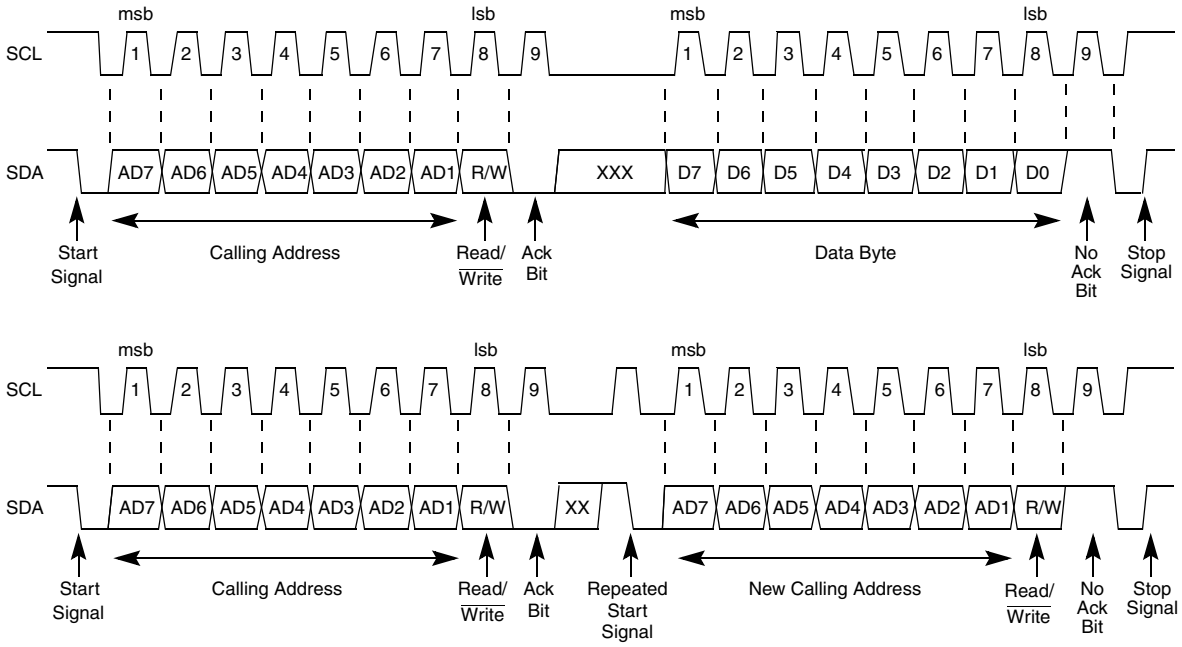

Figure 11-9. IIC Bus Transmission Signals

11.4.1.1 Start Signal

When the bus is free, no master device is engaging the bus (SCL and SDA lines are at logical high), a master may initiate communication by sending a start signal. As shown in Figure 11-9, a start signal is defined as a high-to-low transition of SDA while SCL is high. This signal denotes the beginning of a new data transfer (each data transfer may contain several bytes of data) and brings all slaves out of their idle states.

11.4.1.2 Slave Address Transmission

The first byte of data transferred immediately after the start signal is the slave address transmitted by the master. This is a seven-bit calling address followed by a R/$\overline{W}$ bit. The R/$\overline{W}$ bit tells the slave the desired direction of data transfer.

1 = Read transfer, the slave transmits data to the master.
0 = Write transfer, the master transmits data to the slave.

Only the slave with a calling address that matches the one transmitted by the master responds by sending back an acknowledge bit. This is done by pulling the SDA low at the ninth clock (see Figure 11-9).

No two slaves in the system may have the same address. If the IIC module is the master, it must not transmit an address equal to its own slave address. The IIC cannot be master and slave at the same time. However, if arbitration is lost during an address cycle, the IIC reverts to slave mode and operates correctly even if it is being addressed by another master.

11.4.1.3 Data Transfer

Before successful slave addressing is achieved, the data transfer can proceed byte-by-byte in a direction specified by the R/$\overline{W}$ bit sent by the calling master.

All transfers that come after an address cycle are referred to as data transfers, even if they carry sub-address information for the slave device

Each data byte is 8 bits long. Data may be changed only while SCL is low and must be held stable while SCL is high as shown in Figure 11-9. There is one clock pulse on SCL for each data bit, the msb being transferred first. Each data byte is followed by a 9th (acknowledge) bit, which is signalled from the receiving device. An acknowledge is signalled by pulling the SDA low at the ninth clock. In summary, one complete data transfer needs nine clock pulses.

If the slave receiver does not acknowledge the master in the ninth bit time, the SDA line must be left high by the slave. The master interprets the failed acknowledge as an unsuccessful data transfer.

If the master receiver does not acknowledge the slave transmitter after a data byte transmission, the slave interprets this as an end of data transfer and releases the SDA line.

In either case, the data transfer is aborted and the master does one of two things:

- Relinquishes the bus by generating a stop signal.
- Commences a new calling by generating a repeated start signal.

11.4.1.4 Stop Signal

The master can terminate the communication by generating a stop signal to free the bus. However, the master may generate a start signal followed by a calling command without generating a stop signal first. This is called repeated start. A stop signal is defined as a low-to-high transition of SDA while SCL at logical 1 (see Figure 11-9).

The master can generate a stop even if the slave has generated an acknowledge at which point the slave must release the bus.

11.4.1.5 Repeated Start Signal

As shown in Figure 11-9, a repeated start signal is a start signal generated without first generating a stop signal to terminate the communication. This is used by the master to communicate with another slave or with the same slave in different mode (transmit/receive mode) without releasing the bus.

11.4.1.6 Arbitration Procedure

The IIC bus is a true multi-master bus that allows more than one master to be connected on it. If two or more masters try to control the bus at the same time, a clock synchronization procedure determines the bus clock, for which the low period is equal to the longest clock low period and the high is equal to the shortest one among the masters. The relative priority of the contending masters is determined by a data arbitration procedure, a bus master loses arbitration if it transmits logic 1 while another master transmits logic 0. The losing masters immediately switch over to slave receive mode and stop driving SDA output. In this case, the transition from master to slave mode does not generate a stop condition. Meanwhile, a status bit is set by hardware to indicate loss of arbitration.

11.4.1.7 Clock Synchronization

Because wire-AND logic is performed on the SCL line, a high-to-low transition on the SCL line affects all the devices connected on the bus. The devices start counting their low period and after a device's clock has gone low, it holds the SCL line low until the clock high state is reached. However, the change of low to high in this device clock may not change the state of the SCL line if another device clock is still within its low period. Therefore, synchronized clock SCL is held low by the device with the longest low period. Devices with shorter low periods enter a high wait state during this time (see Figure 11-10). When all devices concerned have counted off their low period, the synchronized clock SCL line is released and pulled high. There is then no difference between the device clocks and the state of the SCL line and all the devices start counting their high periods. The first device to complete its high period pulls the SCL line low again.

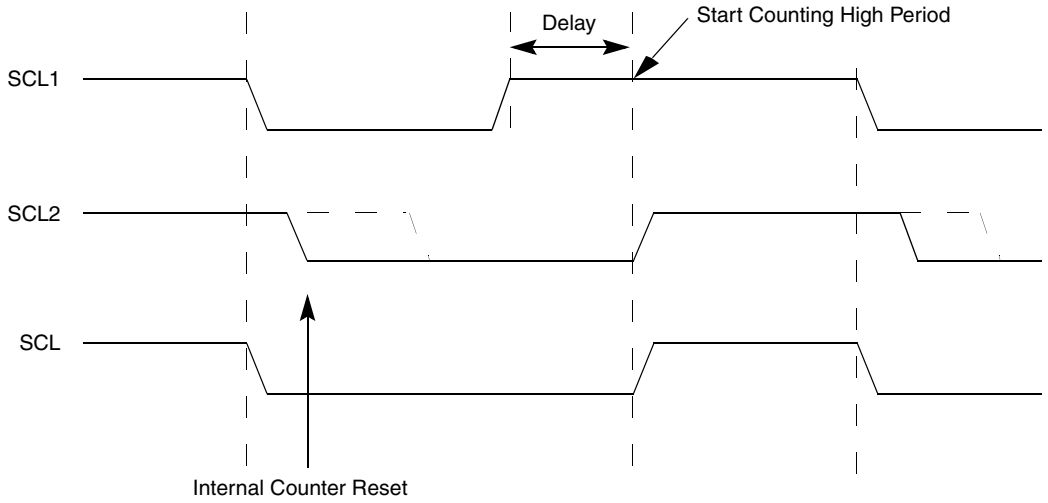

Figure 11-10. IIC Clock Synchronization

11.4.1.8 Handshaking

The clock synchronization mechanism can be used as a handshake in data transfer. Slave devices may hold the SCL low after completion of one byte transfer (9 bits). In such a case, it halts the bus clock and forces the master clock into wait states until the slave releases the SCL line.

11.4.1.9 Clock Stretching

The clock synchronization mechanism can be used by slaves to slow down the bit rate of a transfer. After the master has driven SCL low the slave can drive SCL low for the required period and then release it. If the slave SCL low period is greater than the master SCL low period then the resulting SCL bus signal low period is stretched.

11.4.2 10-bit Address

For 10-bit addressing, 0x11110 is used for the first 5 bits of the first address byte. Various combinations of read/write formats are possible within a transfer that includes 10-bit addressing.

11.4.2.1 Master-Transmitter Addresses a Slave-Receiver

The transfer direction is not changed (see Table 11-9). When a 10-bit address follows a start condition, each slave compares the first seven bits of the first byte of the slave address (11110XX) with its own address and tests whether the eighth bit (R/$\overline{W}$ direction bit) is 0. More than one device can find a match and generate an acknowledge (A1). Then, each slave that finds a match compares the eight bits of the second byte of the slave address with its own address. Only one slave finds a match and generates an acknowledge (A2). The matching slave remains addressed by the master until it receives a stop condition (P) or a repeated start condition (Sr) followed by a different slave address.

S	Slave Address 1st 7 bits 11110 + AD10 + AD9	R/W 0	A1	Slave Address 2nd byte AD[8:1]	A2	Data	A	...	Data	A/A	P

Table 11-9. Master-Transmitter Addresses Slave-Receiver with a 10-bit Address

After the master-transmitter has sent the first byte of the 10-bit address, the slave-receiver sees an IIC interrupt. Software must ensure the contents of IICD are ignored and not treated as valid data for this interrupt.

11.4.2.2 Master-Receiver Addresses a Slave-Transmitter

The transfer direction is changed after the second R/$\overline{W}$ bit (see Table 11-10). Up to and including acknowledge bit A2, the procedure is the same as that described for a master-transmitter addressing a slave-receiver. After the repeated start condition (Sr), a matching slave remembers that it was addressed before. This slave then checks whether the first seven bits of the first byte of the slave address following Sr are the same as they were after the start condition (S) and tests whether the eighth (R/$\overline{W}$) bit is 1. If there is a match, the slave considers that it has been addressed as a transmitter and generates acknowledge A3. The slave-transmitter remains addressed until it receives a stop condition (P) or a repeated start condition (Sr) followed by a different slave address.

After a repeated start condition (Sr), all other slave devices also compare the first seven bits of the first byte of the slave address with their own addresses and test the eighth (R/$\overline{W}$) bit. However, none of them are addressed because R/$\overline{W}$ = 1 (for 10-bit devices) or the 11110XX slave address (for 7-bit devices) does not match.

S	Slave Address 1st 7 bits 11110 + AD10 + AD9	R/W 0	A1	Slave Address 2nd byte AD[8:1]	A2	Sr	Slave Address 1st 7 bits 11110 + AD10 + AD9	R/W 1	A3	Data	A	...	Data	A	P

Table 11-10. Master-Receiver Addresses a Slave-Transmitter with a 10-bit Address

After the master-receiver has sent the first byte of the 10-bit address, the slave-transmitter sees an IIC interrupt. Software must ensure the contents of IICD are ignored and not treated as valid data for this interrupt.

11.4.3 General Call Address

General calls can be requested in 7-bit address or 10-bit address. If the GCAEN bit is set, the IIC matches the general call address as well as its own slave address. When the IIC responds to a general call, it acts as a slave-receiver and the IAAS bit is set after the address cycle. Software must read the IICD register after the first byte transfer to determine whether the address matches is its own slave address or a general call. If the value is 00, the match is a general call. If the GCAEN bit is clear, the IIC ignores any data supplied from a general call address by not issuing an acknowledgement.

11.5 Resets

The IIC is disabled after reset. The IIC cannot cause an MCU reset.

11.6 Interrupts

The IIC generates a single interrupt.

An interrupt from the IIC is generated when any of the events in Table 11-11 occur, provided the IICIE bit is set. The interrupt is driven by bit IICIF (of the IIC status register) and masked with bit IICIE (of the IIC control register). The IICIF bit must be cleared by software by writing a 1 to it in the interrupt routine. You can determine the interrupt type by reading the status register.

Table 11-11. Interrupt Summary

Interrupt Source	Status	Flag	Local Enable
Complete 1-byte transfer	TCF	IICIF	IICIE
Match of received calling address	IAAS	IICIF	IICIE
Arbitration Lost	ARBL	IICIF	IICIE

11.6.1 Byte Transfer Interrupt

The TCF (transfer complete flag) bit is set at the falling edge of the ninth clock to indicate the completion of byte transfer.

11.6.2 Address Detect Interrupt

When the calling address matches the programmed slave address (IIC address register) or when the GCAEN bit is set and a general call is received, the IAAS bit in the status register is set. The CPU is interrupted, provided the IICIE is set. The CPU must check the SRW bit and set its Tx mode accordingly.

11.6.3 Arbitration Lost Interrupt

The IIC is a true multi-master bus that allows more than one master to be connected on it. If two or more masters try to control the bus at the same time, the relative priority of the contending masters is determined by a data arbitration procedure. The IIC module asserts this interrupt when it loses the data arbitration process and the ARBL bit in the status register is set.

Arbitration is lost in the following circumstances:

- SDA sampled as a low when the master drives a high during an address or data transmit cycle.
- SDA sampled as a low when the master drives a high during the acknowledge bit of a data receive cycle.
- A start cycle is attempted when the bus is busy.
- A repeated start cycle is requested in slave mode.
- A stop condition is detected when the master did not request it.

This bit must be cleared by software writing a 1 to it.

11.7 Initialization/Application Information

Module Initialization (Slave)

1. Write: IICC2
   — to enable or disable general call
   — to select 10-bit or 7-bit addressing mode
2. Write: IICA
   — to set the slave address
3. Write: IICC1
   — to enable IIC and interrupts
4. Initialize RAM variables (IICEN = 1 and IICIE = 1) for transmit data
5. Initialize RAM variables used to achieve the routine shown in Figure 11-12

Module Initialization (Master)

1. Write: IICF
   — to set the IIC baud rate (example provided in this chapter)
2. Write: IICC1
   — to enable IIC and interrupts
3. Initialize RAM variables (IICEN = 1 and IICIE = 1) for transmit data
4. Initialize RAM variables used to achieve the routine shown in Figure 11-12
5. Write: IICC1
   — to enable TX

Register Model

IICA	AD[7:1]							0
	When addressed as a slave (in slave mode), the module responds to this address							
IICF	MULT		ICR					
	Baud rate = BUSCLK / (2 x MULT x (SCL DIVIDER))							
IICC1	IICEN	IICIE	MST	TX	TXAK	RSTA	0	0
	Module configuration							
IICS	TCF	IAAS	BUSY	ARBL	0	SRW	IICIF	RXAK
	Module status flags							
IICD	DATA							
	Data register; Write to transmit IIC data read to read IIC data							
IICC2	GCAEN	ADEXT	0	0	0	AD10	AD9	AD8
	Address configuration							

Figure 11-11. IIC Module Quick Start

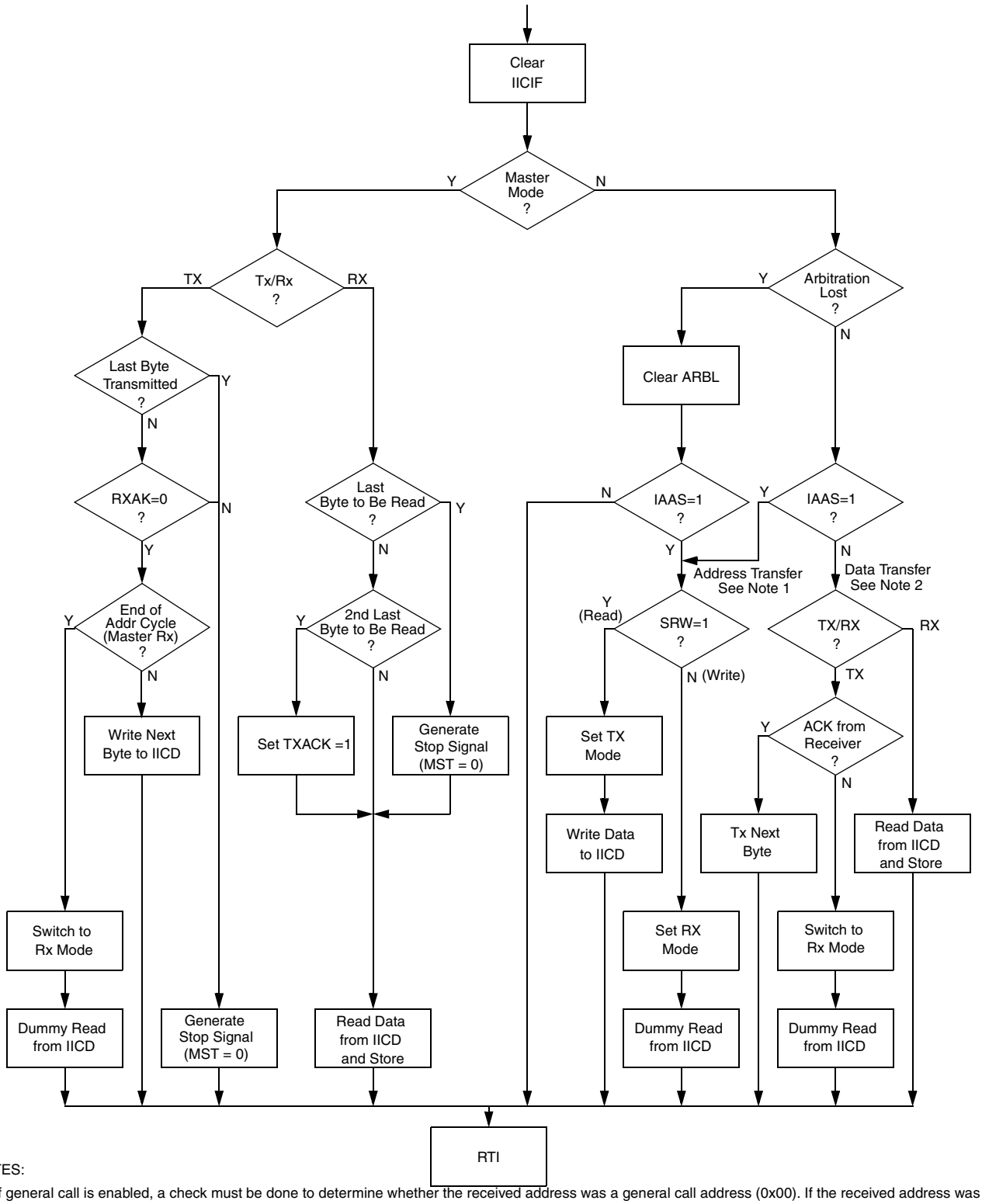

NOTES:

1. If general call is enabled, a check must be done to determine whether the received address was a general call address (0x00). If the received address was a general call address, then the general call must be handled by user software.
2. When 10-bit addressing is used to address a slave, the slave sees an interrupt following the first byte of the extended address. User software must ensure that for this interrupt, the contents of IICD are ignored and not treated as a valid data transfer.

Figure 11-12. Typical IIC Interrupt Routine

Chapter 12
Keyboard Interrupt (S08KBIV1)

12.1 Introduction

The MC9S08AC60 Series has one KBI module with upto eight keyboard interrupt inputs available depending on package.

12.1.1 Features

The keyboard interrupt (KBI) module features include:

- Four falling edge/low level sensitive
- Four falling edge/low level or rising edge/high level sensitive
- Choice of edge-only or edge-and-level sensitivity
- Common interrupt flag and interrupt enable control
- Capable of waking up the MCU from stop3 or wait mode

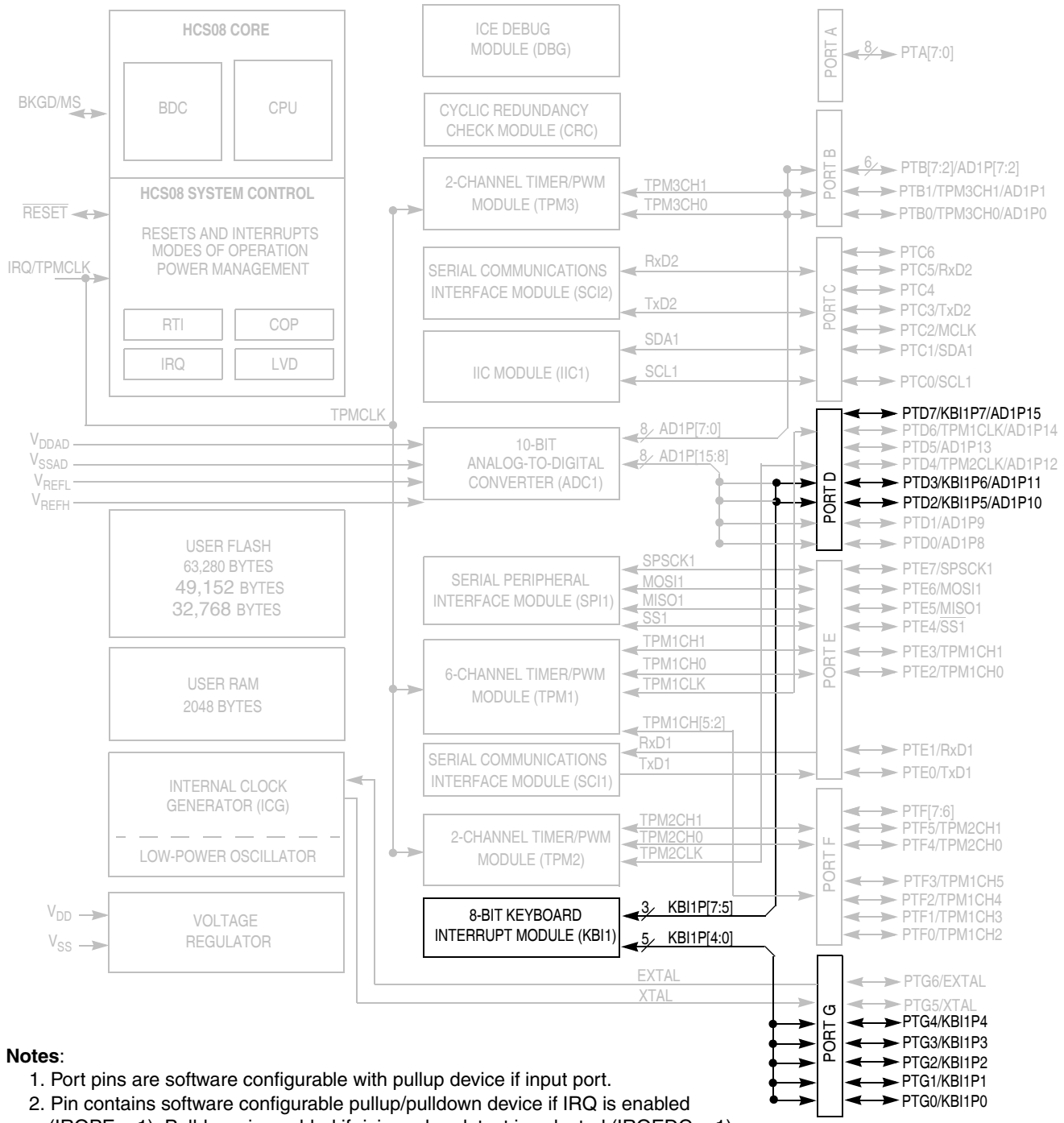

Notes:

1. Port pins are software configurable with pullup device if input port.
2. Pin contains software configurable pullup/pulldown device if IRQ is enabled (IRQPE = 1). Pulldown is enabled if rising edge detect is selected (IRQEDG = 1)
3. Pin contains integrated pullup device.
4. PTD3, PTD2, PTD7, and PTG4 contain both pullup and pulldown devices. Pulldown enabled when KBI is enabled (KBIPEn = 1) and rising edge is selected (KBEDGn = 1).
5. TPMCLK, TPM1CLK, and TPM2CLK options are configured via software; out of reset, TPM1CLK, TPM2CLK, and TPMCLK are available to TPM1, TPM2, and TPM3 respectively.

Figure 12-1. Block Diagram Highlighting KBI Module

12.1.2 KBI Block Diagram

Figure 12-2 shows the block diagram for a KBI module.

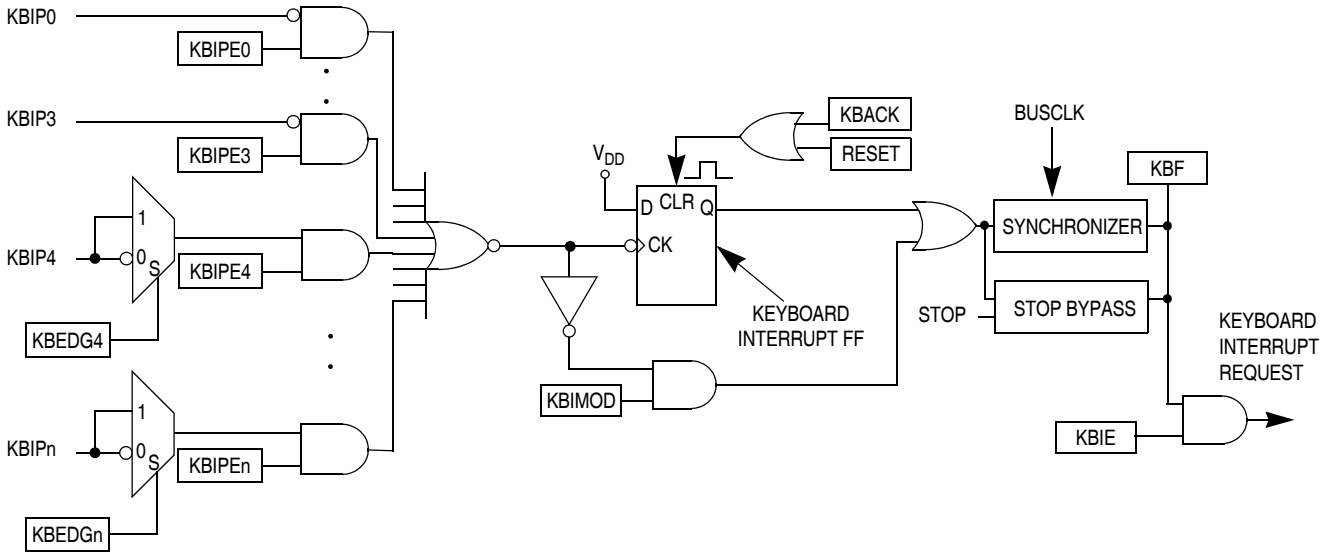

Figure 12-2. KBI Block Diagram

12.2 Register Definition

This section provides information about all registers and control bits associated with the KBI module.

Refer to the direct-page register summary in the Memory chapter of this data sheet for the absolute address assignments for all KBI registers. This section refers to registers and control bits only by their names. A Freescale-provided equate or header file is used to translate these names into the appropriate absolute addresses.

12.2.1 KBI Status and Control Register (KBISC)

	7	6	5	4	3	2	1	0
R	KBEDG7	KBEDG6	KBEDG5	KBEDG4	KBF	0	KBIE	KBIMOD
W						KBACK		
Reset	0	0	0	0	0	0	0	0

= Unimplemented or Reserved

Figure 12-3. KBI Status and Control Register (KBISC)

Table 12-1. KBISC Register Field Descriptions

Field	Description
7:4 KBEDG[7:4]	**Keyboard Edge Select for KBI Port Bits** — Each of these read/write bits selects the polarity of the edges and/or levels that are recognized as trigger events on the corresponding KBI port pin when it is configured as a keyboard interrupt input (KBIPEn = 1). Also see the KBIMOD control bit, which determines whether the pin is sensitive to edges-only or edges and levels. 0 Falling edges/low levels 1 Rising edges/high levels
3 KBF	**Keyboard Interrupt Flag** — This read-only status flag is set whenever the selected edge event has been detected on any of the enabled KBI port pins. This flag is cleared by writing a 1 to the KBACK control bit. The flag will remain set if KBIMOD = 1 to select edge-and-level operation and any enabled KBI port pin remains at the asserted level. KBF can be used as a software pollable flag (KBIE = 0) or it can generate a hardware interrupt request to the CPU (KBIE = 1). 0 No KBI interrupt pending 1 KBI interrupt pending
2 KBACK	**Keyboard Interrupt Acknowledge** — This write-only bit (reads always return 0) is used to clear the KBF status flag by writing a 1 to KBACK. When KBIMOD = 1 to select edge-and-level operation and any enabled KBI port pin remains at the asserted level, KBF is being continuously set so writing 1 to KBACK does not clear the KBF flag.
1 KBIE	**Keyboard Interrupt Enable** — This read/write control bit determines whether hardware interrupts are generated when the KBF status flag equals 1. When KBIE = 0, no hardware interrupts are generated, but KBF can still be used for software polling. 0 KBF does not generate hardware interrupts (use polling) 1 KBI hardware interrupt requested when KBF = 1
KBIMOD	**Keyboard Detection Mode** — This read/write control bit selects either edge-only detection or edge-and-level detection. KBI port bits 3 through 0 can detect falling edges-only or falling edges and low levels. KBI port bits 7 through 4 can be configured to detect either: • Rising edges-only or rising edges and high levels (KBEDGn = 1) • Falling edges-only or falling edges and low levels (KBEDGn = 0) 0 Edge-only detection 1 Edge-and-level detection

12.2.2 KBI Pin Enable Register (KBIPE)

	7	6	5	4	3	2	1	0
R W	KBIPE7	KBIPE6	KBIPE5	KBIPE4	KBIPE3	KBIPE2	KBIPE1	KBIPE0
Reset	0	0	0	0	0	0	0	0

= Unimplemented or Reserved

Figure 12-4. KBI Pin Enable Register (KBIPE)

Table 12-2. KBIPE Register Field Descriptions

Field	Description
7:0 KBIPE[7:0]	**Keyboard Pin Enable for KBI Port Bits** — Each of these read/write bits selects whether the associated KBI port pin is enabled as a keyboard interrupt input or functions as a general-purpose I/O pin. 0 Bit n of KBI port is a general-purpose I/O pin not associated with the KBI 1 Bit n of KBI port enabled as a keyboard interrupt input

12.3 Functional Description

12.3.1 Pin Enables

The KBIPEn control bits in the KBIPE register allow a user to enable (KBIPEn = 1) any combination of KBI-related port pins to be connected to the KBI module. Pins corresponding to 0s in KBIPE are general-purpose I/O pins that are not associated with the KBI module.

12.3.2 Edge and Level Sensitivity

Synchronous logic is used to detect edges. Prior to detecting an edge, enabled keyboard inputs in a KBI module must be at the deasserted logic level.

A falling edge is detected when an enabled keyboard input signal is seen as a logic 1 (the deasserted level) during one bus cycle and then a logic 0 (the asserted level) during the next cycle.

A rising edge is detected when the input signal is seen as a logic 0 during one bus cycle and then a logic 1 during the next cycle.

The KBIMOD control bit can be set to reconfigure the detection logic so that it detects edges and levels. In KBIMOD = 1 mode, the KBF status flag becomes set when an edge is detected (when one or more enabled pins change from the deasserted to the asserted level while all other enabled pins remain at their deasserted levels), but the flag is continuously set (and cannot be cleared) as long as any enabled keyboard input pin remains at the asserted level. When the MCU enters stop mode, the synchronous edge-detection logic is bypassed (because clocks are stopped). In stop mode, KBI inputs act as asynchronous level-sensitive inputs so they can wake the MCU from stop mode.

12.3.3 KBI Interrupt Controls

The KBF status flag becomes set (1) when an edge event has been detected on any KBI input pin. If KBIE = 1 in the KBISC register, a hardware interrupt will be requested whenever KBF = 1. The KBF flag is cleared by writing a 1 to the keyboard acknowledge (KBACK) bit.

When KBIMOD = 0 (selecting edge-only operation), KBF is always cleared by writing 1 to KBACK. When KBIMOD = 1 (selecting edge-and-level operation), KBF cannot be cleared as long as any keyboard input is at its asserted level.

Chapter 13
Serial Communications Interface (S08SCIV4)

13.1 Introduction

The MC9S08AC60 Series includes up to two independent serial communications interface (SCI) modules depending on package. An SCI is sometimes called universal asynchronous receiver/transmitters (UARTs). For the MC9S08AC60 Series, stop1 is not a valid mode, so ignore these references.

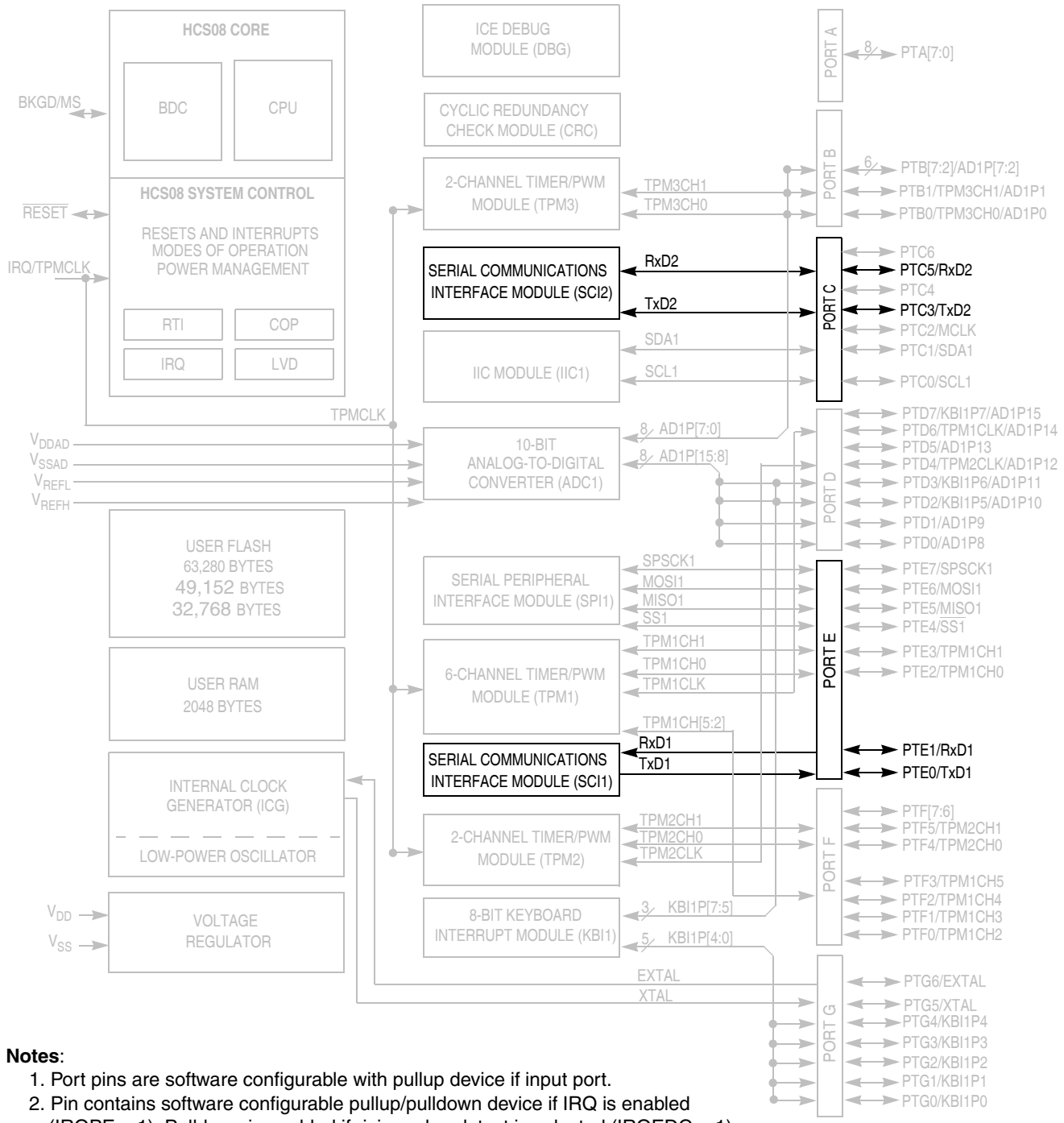

Notes:

1. Port pins are software configurable with pullup device if input port.
2. Pin contains software configurable pullup/pulldown device if IRQ is enabled (IRQPE = 1). Pulldown is enabled if rising edge detect is selected (IRQEDG = 1)
3. Pin contains integrated pullup device.
4. PTD3, PTD2, PTD7, and PTG4 contain both pullup and pulldown devices. Pulldown enabled when KBI is enabled (KBIPEn = 1) and rising edge is selected (KBEDGn = 1).
5. TPMCLK, TPM1CLK, and TPM2CLK options are configured via software; out of reset, TPM1CLK, TPM2CLK, and TPMCLK are available to TPM1, TPM2, and TPM3 respectively.

Figure 13-1. Block Diagram Highlighting the SCI Modules

13.1.1 Features

Features of SCI module include:

- Full-duplex, standard non-return-to-zero (NRZ) format
- Double-buffered transmitter and receiver with separate enables
- Programmable baud rates (13-bit modulo divider)
- Interrupt-driven or polled operation:
  - Transmit data register empty and transmission complete
  - Receive data register full
  - Receive overrun, parity error, framing error, and noise error
  - Idle receiver detect
  - Active edge on receive pin
  - Break detect supporting LIN
- Hardware parity generation and checking
- Programmable 8-bit or 9-bit character length
- Receiver wakeup by idle-line or address-mark
- Optional 13-bit break character generation / 11-bit break character detection
- Selectable transmitter output polarity

13.1.2 Modes of Operation

See Section 13.3, “Functional Description,” For details concerning SCI operation in these modes:

- 8- and 9-bit data modes
- Stop mode operation
- Loop mode
- Single-wire mode

13.1.3 Block Diagram

Figure 13-2 shows the transmitter portion of the SCI.

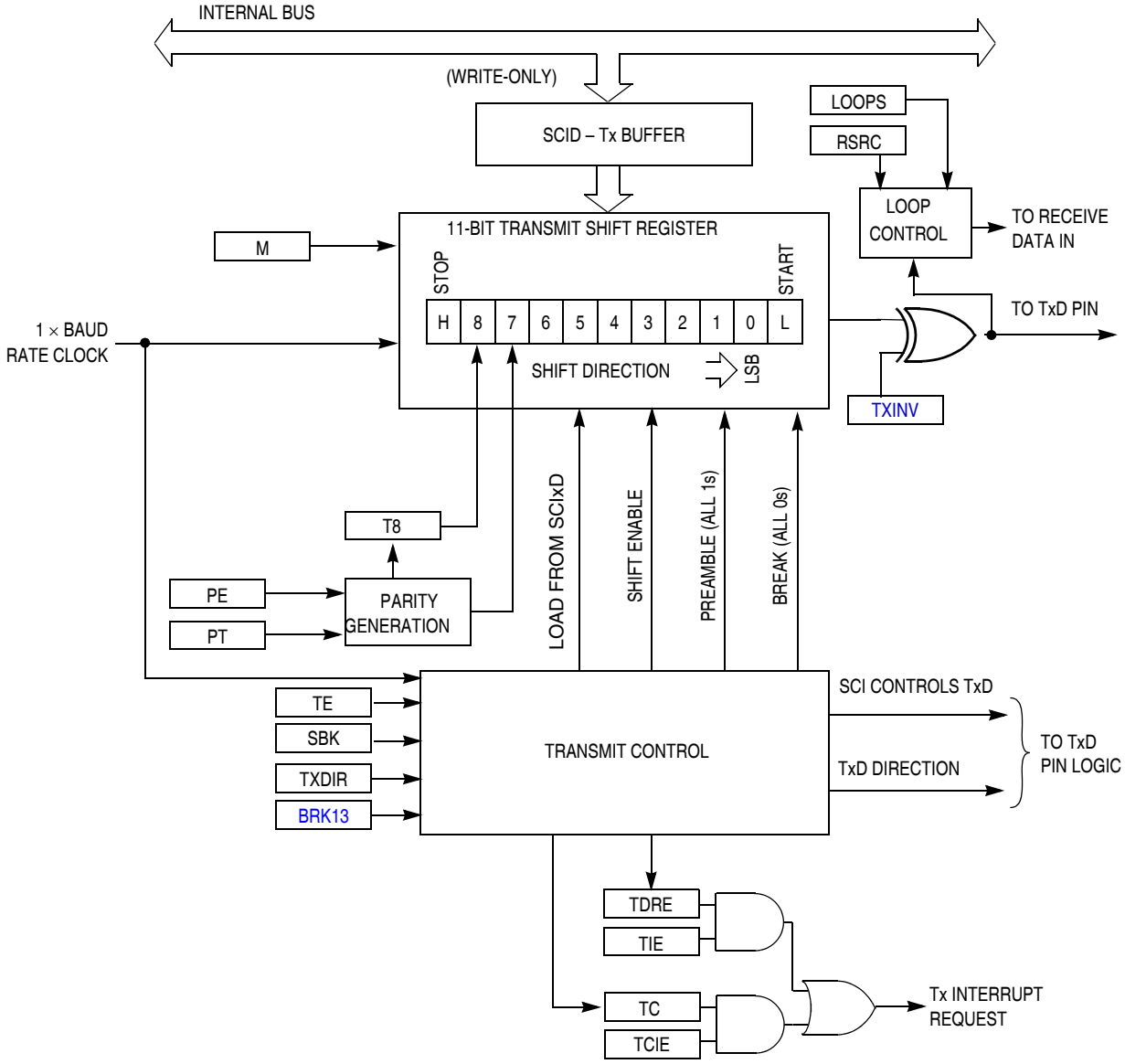

Figure 13-2. SCI Transmitter Block Diagram

Figure 13-3 shows the receiver portion of the SCI.

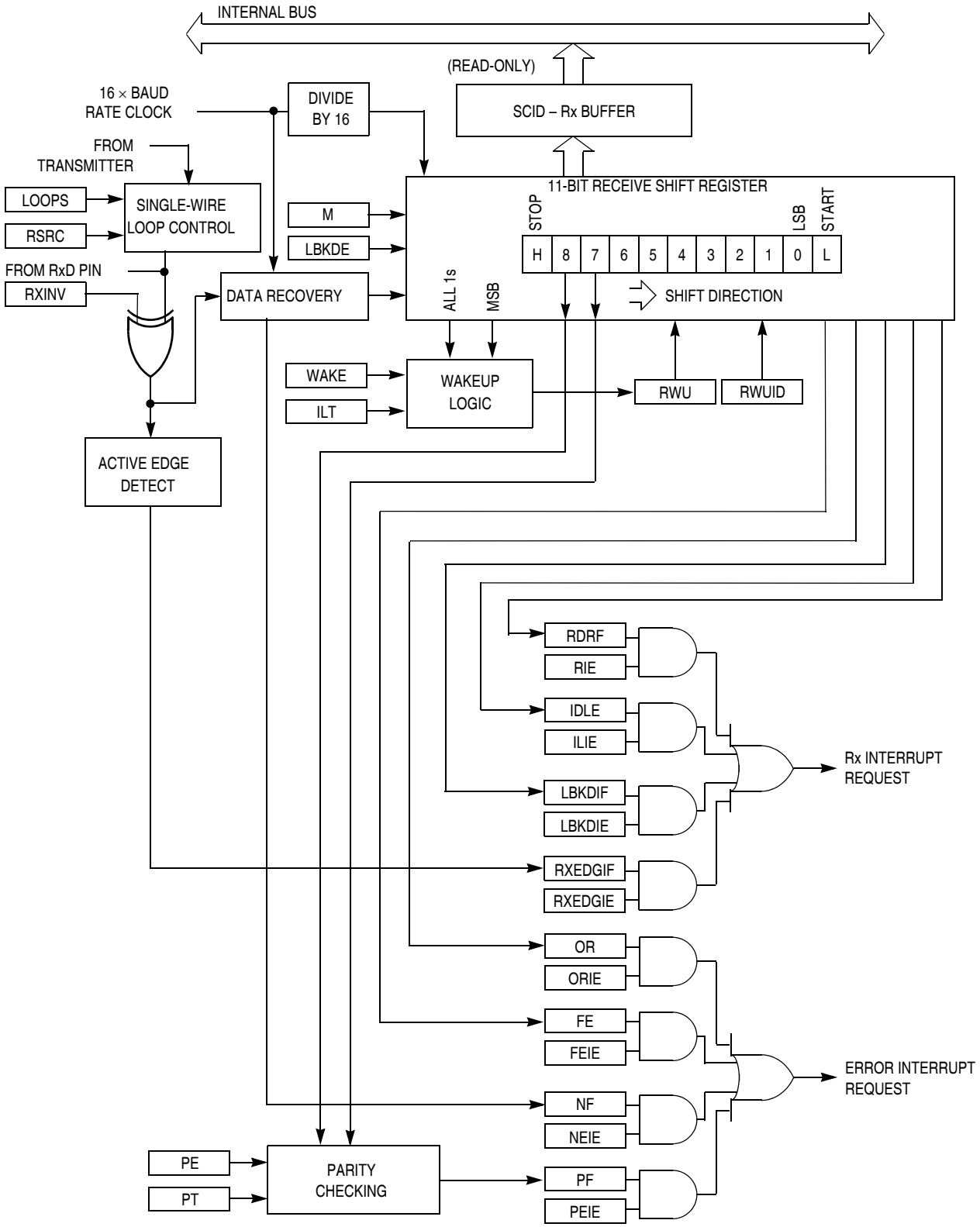

Figure 13-3. SCI Receiver Block Diagram

13.2 Register Definition

The SCI has eight 8-bit registers to control baud rate, select SCI options, report SCI status, and for transmit/receive data.

Refer to the direct-page register summary in the Memory chapter of this data sheet for the absolute address assignments for all SCI registers. This section refers to registers and control bits only by their names.

13.2.1 SCI Baud Rate Registers (SCIxBDH, SCIxBDL)

This pair of registers controls the prescale divisor for SCI baud rate generation. To update the 13-bit baud rate setting [SBR12:SBR0], first write to SCIxBDH to buffer the high half of the new value and then write to SCIxBDL. The working value in SCIxBDH does not change until SCIxBDL is written.

SCIxBDL is reset to a non-zero value, so after reset the baud rate generator remains disabled until the first time the receiver or transmitter is enabled (RE or TE bits in SCIxC2 are written to 1).

	7	6	5	4	3	2	1	0
R W	LBKDIE	RXEDGIE	0	SBR12	SBR11	SBR10	SBR9	SBR8
Reset	0	0	0	0	0	0	0	0

= Unimplemented or Reserved

Figure 13-4. SCI Baud Rate Register (SCIxBDH)

Table 13-1. SCIxBDH Field Descriptions

Field	Description
7 LBKDIE	**LIN Break Detect Interrupt Enable (for LBKDIF)** 0 Hardware interrupts from LBKDIF disabled (use polling). 1 Hardware interrupt requested when LBKDIF flag is 1.
6 RXEDGIE	**RxD Input Active Edge Interrupt Enable (for RXEDGIF)** 0 Hardware interrupts from RXEDGIF disabled (use polling). 1 Hardware interrupt requested when RXEDGIF flag is 1.
4:0 SBR[12:8]	**Baud Rate Modulo Divisor** — The 13 bits in SBR[12:0] are referred to collectively as BR, and they set the modulo divide rate for the SCI baud rate generator. When BR = 0, the SCI baud rate generator is disabled to reduce supply current. When BR = 1 to 8191, the SCI baud rate = BUSCLK/(16×BR). See also BR bits in Table 13-2.

	7	6	5	4	3	2	1	0
R W	SBR7	SBR6	SBR5	SBR4	SBR3	SBR2	SBR1	SBR0
Reset	0	0	0	0	0	1	0	0

Figure 13-5. SCI Baud Rate Register (SCIxBDL)

Table 13-2. SCIxBDL Field Descriptions

Field	Description
7:0 SBR[7:0]	**Baud Rate Modulo Divisor** — These 13 bits in SBR[12:0] are referred to collectively as BR, and they set the modulo divide rate for the SCI baud rate generator. When BR = 0, the SCI baud rate generator is disabled to reduce supply current. When BR = 1 to 8191, the SCI baud rate = BUSCLK/(16×BR). See also BR bits in Table 13-1.

13.2.2 SCI Control Register 1 (SCIxC1)

This read/write register is used to control various optional features of the SCI system.

	7	6	5	4	3	2	1	0
R W	LOOPS	SCISWAI	RSRC	M	WAKE	ILT	PE	PT
Reset	0	0	0	0	0	0	0	0

Figure 13-6. SCI Control Register 1 (SCIxC1)

Table 13-3. SCIxC1 Field Descriptions

Field	Description
7 LOOPS	**Loop Mode Select** — Selects between loop back modes and normal 2-pin full-duplex modes. When LOOPS = 1, the transmitter output is internally connected to the receiver input. 0 Normal operation — RxD and TxD use separate pins. 1 Loop mode or single-wire mode where transmitter outputs are internally connected to receiver input. (See RSRC bit.) RxD pin is not used by SCI.
6 SCISWAI	**SCI Stops in Wait Mode** 0 SCI clocks continue to run in wait mode so the SCI can be the source of an interrupt that wakes up the CPU. 1 SCI clocks freeze while CPU is in wait mode.
5 RSRC	**Receiver Source Select** — This bit has no meaning or effect unless the LOOPS bit is set to 1. When LOOPS = 1, the receiver input is internally connected to the TxD pin and RSRC determines whether this connection is also connected to the transmitter output. 0 Provided LOOPS = 1, RSRC = 0 selects internal loop back mode and the SCI does not use the RxD pins. 1 Single-wire SCI mode where the TxD pin is connected to the transmitter output and receiver input.
4 M	**9-Bit or 8-Bit Mode Select** 0 Normal — start + 8 data bits (LSB first) + stop. 1 Receiver and transmitter use 9-bit data characters start + 8 data bits (LSB first) + 9th data bit + stop.
3 WAKE	**Receiver Wakeup Method Select** — Refer to Section 13.3.3.2, “Receiver Wakeup Operation” for more information. 0 Idle-line wakeup. 1 Address-mark wakeup.
2 ILT	**Idle Line Type Select** — Setting this bit to 1 ensures that the stop bit and logic 1 bits at the end of a character do not count toward the 10 or 11 bit times of logic high level needed by the idle line detection logic. Refer to Section 13.3.3.2.1, “Idle-Line Wakeup” for more information. 0 Idle character bit count starts after start bit. 1 Idle character bit count starts after stop bit.

Table 13-3. SCIxC1 Field Descriptions (continued)

Field	Description
1 PE	**Parity Enable** — Enables hardware parity generation and checking. When parity is enabled, the most significant bit (MSB) of the data character (eighth or ninth data bit) is treated as the parity bit. 0 No hardware parity generation or checking. 1 Parity enabled.
0 PT	**Parity Type** — Provided parity is enabled (PE = 1), this bit selects even or odd parity. Odd parity means the total number of 1s in the data character, including the parity bit, is odd. Even parity means the total number of 1s in the data character, including the parity bit, is even. 0 Even parity. 1 Odd parity.

13.2.3 SCI Control Register 2 (SCIxC2)

This register can be read or written at any time.

	7	6	5	4	3	2	1	0
R W	TIE	TCIE	RIE	ILIE	TE	RE	RWU	SBK
Reset	0	0	0	0	0	0	0	0

Figure 13-7. SCI Control Register 2 (SCIxC2)

Table 13-4. SCIxC2 Field Descriptions

Field	Description
7 TIE	**Transmit Interrupt Enable (for TDRE)** 0 Hardware interrupts from TDRE disabled (use polling). 1 Hardware interrupt requested when TDRE flag is 1.
6 TCIE	**Transmission Complete Interrupt Enable (for TC)** 0 Hardware interrupts from TC disabled (use polling). 1 Hardware interrupt requested when TC flag is 1.
5 RIE	**Receiver Interrupt Enable (for RDRF)** 0 Hardware interrupts from RDRF disabled (use polling). 1 Hardware interrupt requested when RDRF flag is 1.
4 ILIE	**Idle Line Interrupt Enable (for IDLE)** 0 Hardware interrupts from IDLE disabled (use polling). 1 Hardware interrupt requested when IDLE flag is 1.
3 TE	**Transmitter Enable** 0 Transmitter off. 1 Transmitter on. TE must be 1 in order to use the SCI transmitter. When TE = 1, the SCI forces the TxD pin to act as an output for the SCI system. When the SCI is configured for single-wire operation (LOOPS = RSRC = 1), TXDIR controls the direction of traffic on the single SCI communication line (TxD pin). TE also can be used to queue an idle character by writing TE = 0 then TE = 1 while a transmission is in progress. Refer to Section 13.3.2.1, “Send Break and Queued Idle” for more details. When TE is written to 0, the transmitter keeps control of the port TxD pin until any data, queued idle, or queued break character finishes transmitting before allowing the pin to revert to a general-purpose I/O pin.

Table 13-4. SCIxC2 Field Descriptions (continued)

Field	Description
2 RE	**Receiver Enable** — When the SCI receiver is off, the RxD pin reverts to being a general-purpose port I/O pin. If LOOPS = 1 the RxD pin reverts to being a general-purpose I/O pin even if RE = 1. 0 Receiver off. 1 Receiver on.
1 RWU	**Receiver Wakeup Control** — This bit can be written to 1 to place the SCI receiver in a standby state where it waits for automatic hardware detection of a selected wakeup condition. The wakeup condition is either an idle line between messages (WAKE = 0, idle-line wakeup), or a logic 1 in the most significant data bit in a character (WAKE = 1, address-mark wakeup). Application software sets RWU and (normally) a selected hardware condition automatically clears RWU. Refer to Section 13.3.3.2, "Receiver Wakeup Operation" for more details. 0 Normal SCI receiver operation. 1 SCI receiver in standby waiting for wakeup condition.
0 SBK	**Send Break** — Writing a 1 and then a 0 to SBK queues a break character in the transmit data stream. Additional break characters of 10 or 11 (13 or 14 if BRK13 = 1) bit times of logic 0 are queued as long as SBK = 1. Depending on the timing of the set and clear of SBK relative to the information currently being transmitted, a second break character may be queued before software clears SBK. Refer to Section 13.3.2.1, "Send Break and Queued Idle" for more details. 0 Normal transmitter operation. 1 Queue break character(s) to be sent.

13.2.4 SCI Status Register 1 (SCIxS1)

This register has eight read-only status flags. Writes have no effect. Special software sequences (which do not involve writing to this register) are used to clear these status flags.

	7	6	5	4	3	2	1	0
R	TDRE	TC	RDRF	IDLE	OR	NF	FE	PF
W								
Reset	1	1	0	0	0	0	0	0

= Unimplemented or Reserved

Figure 13-8. SCI Status Register 1 (SCIxS1)

Table 13-5. SCIxS1 Field Descriptions

Field	Description
7 TDRE	**Transmit Data Register Empty Flag** — TDRE is set out of reset and when a transmit data value transfers from the transmit data buffer to the transmit shifter, leaving room for a new character in the buffer. To clear TDRE, read SCIxS1 with TDRE = 1 and then write to the SCI data register (SCIxD). 0 Transmit data register (buffer) full. 1 Transmit data register (buffer) empty.
6 TC	**Transmission Complete Flag** — TC is set out of reset and when TDRE = 1 and no data, preamble, or break character is being transmitted. 0 Transmitter active (sending data, a preamble, or a break). 1 Transmitter idle (transmission activity complete). TC is cleared automatically by reading SCIxS1 with TC = 1 and then doing one of the following three things: • Write to the SCI data register (SCIxD) to transmit new data • Queue a preamble by changing TE from 0 to 1 • Queue a break character by writing 1 to SBK in SCIxC2
5 RDRF	**Receive Data Register Full Flag** — RDRF becomes set when a character transfers from the receive shifter into the receive data register (SCIxD). To clear RDRF, read SCIxS1 with RDRF = 1 and then read the SCI data register (SCIxD). 0 Receive data register empty. 1 Receive data register full.
4 IDLE	**Idle Line Flag** — IDLE is set when the SCI receive line becomes idle for a full character time after a period of activity. When ILT = 0, the receiver starts counting idle bit times after the start bit. So if the receive character is all 1s, these bit times and the stop bit time count toward the full character time of logic high (10 or 11 bit times depending on the M control bit) needed for the receiver to detect an idle line. When ILT = 1, the receiver doesn't start counting idle bit times until after the stop bit. So the stop bit and any logic high bit times at the end of the previous character do not count toward the full character time of logic high needed for the receiver to detect an idle line. To clear IDLE, read SCIxS1 with IDLE = 1 and then read the SCI data register (SCIxD). After IDLE has been cleared, it cannot become set again until after a new character has been received and RDRF has been set. IDLE will get set only once even if the receive line remains idle for an extended period. 0 No idle line detected. 1 Idle line was detected.
3 OR	**Receiver Overrun Flag** — OR is set when a new serial character is ready to be transferred to the receive data register (buffer), but the previously received character has not been read from SCIxD yet. In this case, the new character (and all associated error information) is lost because there is no room to move it into SCIxD. To clear OR, read SCIxS1 with OR = 1 and then read the SCI data register (SCIxD). 0 No overrun. 1 Receive overrun (new SCI data lost).
2 NF	**Noise Flag** — The advanced sampling technique used in the receiver takes seven samples during the start bit and three samples in each data bit and the stop bit. If any of these samples disagrees with the rest of the samples within any bit time in the frame, the flag NF will be set at the same time as the flag RDRF gets set for the character. To clear NF, read SCIxS1 and then read the SCI data register (SCIxD). 0 No noise detected. 1 Noise detected in the received character in SCIxD.

Table 13-5. SCIxS1 Field Descriptions (continued)

Field	Description
1 FE	**Framing Error Flag** — FE is set at the same time as RDRF when the receiver detects a logic 0 where the stop bit was expected. This suggests the receiver was not properly aligned to a character frame. To clear FE, read SCIxS1 with FE = 1 and then read the SCI data register (SCIxD). 0 No framing error detected. This does not guarantee the framing is correct. 1 Framing error.
0 PF	**Parity Error Flag** — PF is set at the same time as RDRF when parity is enabled (PE = 1) and the parity bit in the received character does not agree with the expected parity value. To clear PF, read SCIxS1 and then read the SCI data register (SCIxD). 0 No parity error. 1 Parity error.

13.2.5 SCI Status Register 2 (SCIxS2)

This register has one read-only status flag.

	7	6	5	4	3	2	1	0
R W	LBKDIF	RXEDGIF	0	RXINV	RWUID	BRK13	LBKDE	RAF
Reset	0	0	0	0	0	0	0	0

= Unimplemented or Reserved

Figure 13-9. SCI Status Register 2 (SCIxS2)

Table 13-6. SCIxS2 Field Descriptions

Field	Description
7 LBKDIF	**LIN Break Detect Interrupt Flag** — LBKDIF is set when the LIN break detect circuitry is enabled and a LIN break character is detected. LBKDIF is cleared by writing a “1” to it. 0 No LIN break character has been detected. 1 LIN break character has been detected.
6 RXEDGIF	**RxD Pin Active Edge Interrupt Flag** — RXEDGIF is set when an active edge (falling if RXINV = 0, rising if RXINV=1) on the RxD pin occurs. RXEDGIF is cleared by writing a “1” to it. 0 No active edge on the receive pin has occurred. 1 An active edge on the receive pin has occurred.
4 RXINV[1]	**Receive Data Inversion** — Setting this bit reverses the polarity of the received data input. 0 Receive data not inverted 1 Receive data inverted
3 RWUID	**Receive Wake Up Idle Detect**— RWUID controls whether the idle character that wakes up the receiver sets the IDLE bit. 0 During receive standby state (RWU = 1), the IDLE bit does not get set upon detection of an idle character. 1 During receive standby state (RWU = 1), the IDLE bit gets set upon detection of an idle character.
2 BRK13	**Break Character Generation Length** — BRK13 is used to select a longer transmitted break character length. Detection of a framing error is not affected by the state of this bit. 0 Break character is transmitted with length of 10 bit times (11 if M = 1) 1 Break character is transmitted with length of 13 bit times (14 if M = 1)

Table 13-6. SCIxS2 Field Descriptions (continued)

Field	Description
1 LBKDE	**LIN Break Detection Enable**— LBKDE is used to select a longer break character detection length. While LBKDE is set, framing error (FE) and receive data register full (RDRF) flags are prevented from setting. 0 Break character is detected at length of 10 bit times (11 if M = 1). 1 Break character is detected at length of 11 bit times (12 if M = 1).
0 RAF	**Receiver Active Flag** — RAF is set when the SCI receiver detects the beginning of a valid start bit, and RAF is cleared automatically when the receiver detects an idle line. This status flag can be used to check whether an SCI character is being received before instructing the MCU to go to stop mode. 0 SCI receiver idle waiting for a start bit. 1 SCI receiver active (RxD input not idle).

[1] Setting RXINV inverts the RxD input for all cases: data bits, start and stop bits, break, and idle.

When using an internal oscillator in a LIN system, it is necessary to raise the break detection threshold by one bit time. Under the worst case timing conditions allowed in LIN, it is possible that a 0x00 data character can appear to be 10.26 bit times long at a slave which is running 14% faster than the master. This would trigger normal break detection circuitry which is designed to detect a 10 bit break symbol. When the LBKDE bit is set, framing errors are inhibited and the break detection threshold changes from 10 bits to 11 bits, preventing false detection of a 0x00 data character as a LIN break symbol.

13.2.6 SCI Control Register 3 (SCIxC3)

	7	6	5	4	3	2	1	0
R	R8	T8	TXDIR	TXINV	ORIE	NEIE	FEIE	PEIE
W								
Reset	0	0	0	0	0	0	0	0

= Unimplemented or Reserved

Figure 13-10. SCI Control Register 3 (SCIxC3)

Table 13-7. SCIxC3 Field Descriptions

Field	Description
7 R8	**Ninth Data Bit for Receiver** — When the SCI is configured for 9-bit data (M = 1), R8 can be thought of as a ninth receive data bit to the left of the MSB of the buffered data in the SCIxD register. When reading 9-bit data, read R8 before reading SCIxD because reading SCIxD completes automatic flag clearing sequences which could allow R8 and SCIxD to be overwritten with new data.
6 T8	**Ninth Data Bit for Transmitter** — When the SCI is configured for 9-bit data (M = 1), T8 may be thought of as a ninth transmit data bit to the left of the MSB of the data in the SCIxD register. When writing 9-bit data, the entire 9-bit value is transferred to the SCI shift register after SCIxD is written so T8 should be written (if it needs to change from its previous value) before SCIxD is written. If T8 does not need to change in the new value (such as when it is used to generate mark or space parity), it need not be written each time SCIxD is written.
5 TXDIR	**TxD Pin Direction in Single-Wire Mode** — When the SCI is configured for single-wire half-duplex operation (LOOPS = RSRC = 1), this bit determines the direction of data at the TxD pin. 0 TxD pin is an input in single-wire mode. 1 TxD pin is an output in single-wire mode.

Table 13-7. SCIxC3 Field Descriptions (continued)

Field	Description
4 TXINV[1]	**Transmit Data Inversion** — Setting this bit reverses the polarity of the transmitted data output. 0 Transmit data not inverted 1 Transmit data inverted
3 ORIE	**Overrun Interrupt Enable** — This bit enables the overrun flag (OR) to generate hardware interrupt requests. 0 OR interrupts disabled (use polling). 1 Hardware interrupt requested when OR = 1.
2 NEIE	**Noise Error Interrupt Enable** — This bit enables the noise flag (NF) to generate hardware interrupt requests. 0 NF interrupts disabled (use polling). 1 Hardware interrupt requested when NF = 1.
1 FEIE	**Framing Error Interrupt Enable** — This bit enables the framing error flag (FE) to generate hardware interrupt requests. 0 FE interrupts disabled (use polling). 1 Hardware interrupt requested when FE = 1.
0 PEIE	**Parity Error Interrupt Enable** — This bit enables the parity error flag (PF) to generate hardware interrupt requests. 0 PF interrupts disabled (use polling). 1 Hardware interrupt requested when PF = 1.

[1] Setting TXINV inverts the TxD output for all cases: data bits, start and stop bits, break, and idle.

13.2.7 SCI Data Register (SCIxD)

This register is actually two separate registers. Reads return the contents of the read-only receive data buffer and writes go to the write-only transmit data buffer. Reads and writes of this register are also involved in the automatic flag clearing mechanisms for the SCI status flags.

	7	6	5	4	3	2	1	0
R	R7	R6	R5	R4	R3	R2	R1	R0
W	T7	T6	T5	T4	T3	T2	T1	T0
Reset	0	0	0	0	0	0	0	0

Figure 13-11. SCI Data Register (SCIxD)

13.3 Functional Description

The SCI allows full-duplex, asynchronous, NRZ serial communication among the MCU and remote devices, including other MCUs. The SCI comprises a baud rate generator, transmitter, and receiver block. The transmitter and receiver operate independently, although they use the same baud rate generator. During normal operation, the MCU monitors the status of the SCI, writes the data to be transmitted, and processes received data. The following describes each of the blocks of the SCI.

13.3.1 Baud Rate Generation

As shown in Figure 13-12, the clock source for the SCI baud rate generator is the bus-rate clock.

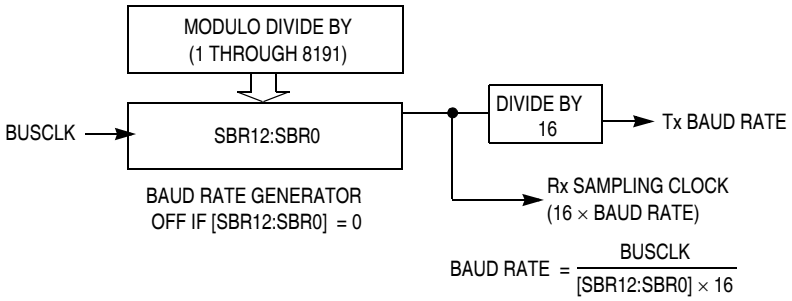

Figure 13-12. SCI Baud Rate Generation

SCI communications require the transmitter and receiver (which typically derive baud rates from independent clock sources) to use the same baud rate. Allowed tolerance on this baud frequency depends on the details of how the receiver synchronizes to the leading edge of the start bit and how bit sampling is performed.

The MCU resynchronizes to bit boundaries on every high-to-low transition, but in the worst case, there are no such transitions in the full 10- or 11-bit time character frame so any mismatch in baud rate is accumulated for the whole character time. For a SCI system whose bus frequency is driven by a crystal, the allowed baud rate mismatch is about ±4.5 percent for 8-bit data format and about ±4 percent for 9-bit data format. Although baud rate modulo divider settings do not always produce baud rates that exactly match standard rates, it is normally possible to get within a few percent, which is acceptable for reliable communications.

13.3.2 Transmitter Functional Description

This section describes the overall block diagram for the SCI transmitter, as well as specialized functions for sending break and idle characters. The transmitter block diagram is shown in Figure 13-2.

The transmitter output (TxD) idle state defaults to logic high (TXINV = 0 following reset). The transmitter output is inverted by setting TXINV = 1. The transmitter is enabled by setting the TE bit in SCIxC2. This queues a preamble character that is one full character frame of the idle state. The transmitter then remains idle until data is available in the transmit data buffer. Programs store data into the transmit data buffer by writing to the SCI data register (SCIxD).

The central element of the SCI transmitter is the transmit shift register that is either 10 or 11 bits long depending on the setting in the M control bit. For the remainder of this section, we will assume M = 0, selecting the normal 8-bit data mode. In 8-bit data mode, the shift register holds a start bit, eight data bits, and a stop bit. When the transmit shift register is available for a new SCI character, the value waiting in the transmit data register is transferred to the shift register (synchronized with the baud rate clock) and the transmit data register empty (TDRE) status flag is set to indicate another character may be written to the transmit data buffer at SCIxD.

If no new character is waiting in the transmit data buffer after a stop bit is shifted out the TxD pin, the transmitter sets the transmit complete flag and enters an idle mode, with TxD high, waiting for more characters to transmit.

Writing 0 to TE does not immediately release the pin to be a general-purpose I/O pin. Any transmit activity that is in progress must first be completed. This includes data characters in progress, queued idle characters, and queued break characters.

13.3.2.1 Send Break and Queued Idle

The SBK control bit in SCIxC2 is used to send break characters which were originally used to gain the attention of old teletype receivers. Break characters are a full character time of logic 0 (10 bit times including the start and stop bits). A longer break of 13 bit times can be enabled by setting BRK13 = 1. Normally, a program would wait for TDRE to become set to indicate the last character of a message has moved to the transmit shifter, then write 1 and then write 0 to the SBK bit. This action queues a break character to be sent as soon as the shifter is available. If SBK is still 1 when the queued break moves into the shifter (synchronized to the baud rate clock), an additional break character is queued. If the receiving device is another SCI, the break characters will be received as 0s in all eight data bits and a framing error (FE = 1) occurs.

When idle-line wakeup is used, a full character time of idle (logic 1) is needed between messages to wake up any sleeping receivers. Normally, a program would wait for TDRE to become set to indicate the last character of a message has moved to the transmit shifter, then write 0 and then write 1 to the TE bit. This action queues an idle character to be sent as soon as the shifter is available. As long as the character in the shifter does not finish while TE = 0, the SCI transmitter never actually releases control of the TxD pin. If there is a possibility of the shifter finishing while TE = 0, set the general-purpose I/O controls so the pin that is shared with TxD is an output driving a logic 1. This ensures that the TxD line will look like a normal idle line even if the SCI loses control of the port pin between writing 0 and then 1 to TE.

The length of the break character is affected by the BRK13 and M bits as shown below.

Table 13-8. Break Character Length

BRK13	M	Break Character Length
0	0	10 bit times
0	1	11 bit times
1	0	13 bit times
1	1	14 bit times

13.3.3 Receiver Functional Description

In this section, the receiver block diagram (Figure 13-3) is used as a guide for the overall receiver functional description. Next, the data sampling technique used to reconstruct receiver data is described in more detail. Finally, two variations of the receiver wakeup function are explained.

The receiver input is inverted by setting RXINV = 1. The receiver is enabled by setting the RE bit in SCIxC2. Character frames consist of a start bit of logic 0, eight (or nine) data bits (LSB first), and a stop bit of logic 1. For information about 9-bit data mode, refer to Section 13.3.5.1, “8- and 9-Bit Data Modes.” For the remainder of this discussion, we assume the SCI is configured for normal 8-bit data mode.

After receiving the stop bit into the receive shifter, and provided the receive data register is not already full, the data character is transferred to the receive data register and the receive data register full (RDRF)

status flag is set. If RDRF was already set indicating the receive data register (buffer) was already full, the overrun (OR) status flag is set and the new data is lost. Because the SCI receiver is double-buffered, the program has one full character time after RDRF is set before the data in the receive data buffer must be read to avoid a receiver overrun.

When a program detects that the receive data register is full (RDRF = 1), it gets the data from the receive data register by reading SCIxD. The RDRF flag is cleared automatically by a 2-step sequence which is normally satisfied in the course of the user's program that handles receive data. Refer to Section 13.3.4, "Interrupts and Status Flags" for more details about flag clearing.

13.3.3.1 Data Sampling Technique

The SCI receiver uses a 16× baud rate clock for sampling. The receiver starts by taking logic level samples at 16 times the baud rate to search for a falling edge on the RxD serial data input pin. A falling edge is defined as a logic 0 sample after three consecutive logic 1 samples. The 16× baud rate clock is used to divide the bit time into 16 segments labeled RT1 through RT16. When a falling edge is located, three more samples are taken at RT3, RT5, and RT7 to make sure this was a real start bit and not merely noise. If at least two of these three samples are 0, the receiver assumes it is synchronized to a receive character.

The receiver then samples each bit time, including the start and stop bits, at RT8, RT9, and RT10 to determine the logic level for that bit. The logic level is interpreted to be that of the majority of the samples taken during the bit time. In the case of the start bit, the bit is assumed to be 0 if at least two of the samples at RT3, RT5, and RT7 are 0 even if one or all of the samples taken at RT8, RT9, and RT10 are 1s. If any sample in any bit time (including the start and stop bits) in a character frame fails to agree with the logic level for that bit, the noise flag (NF) will be set when the received character is transferred to the receive data buffer.

The falling edge detection logic continuously looks for falling edges, and if an edge is detected, the sample clock is resynchronized to bit times. This improves the reliability of the receiver in the presence of noise or mismatched baud rates. It does not improve worst case analysis because some characters do not have any extra falling edges anywhere in the character frame.

In the case of a framing error, provided the received character was not a break character, the sampling logic that searches for a falling edge is filled with three logic 1 samples so that a new start bit can be detected almost immediately.

In the case of a framing error, the receiver is inhibited from receiving any new characters until the framing error flag is cleared. The receive shift register continues to function, but a complete character cannot transfer to the receive data buffer if FE is still set.

13.3.3.2 Receiver Wakeup Operation

Receiver wakeup is a hardware mechanism that allows an SCI receiver to ignore the characters in a message that is intended for a different SCI receiver. In such a system, all receivers evaluate the first character(s) of each message, and as soon as they determine the message is intended for a different receiver, they write logic 1 to the receiver wake up (RWU) control bit in SCIxC2. When RWU bit is set, the status flags associated with the receiver (with the exception of the idle bit, IDLE, when RWUID bit is set) are inhibited from setting, thus eliminating the software overhead for handling the unimportant

message characters. At the end of a message, or at the beginning of the next message, all receivers automatically force RWU to 0 so all receivers wake up in time to look at the first character(s) of the next message.

13.3.3.2.1 Idle-Line Wakeup

When WAKE = 0, the receiver is configured for idle-line wakeup. In this mode, RWU is cleared automatically when the receiver detects a full character time of the idle-line level. The M control bit selects 8-bit or 9-bit data mode that determines how many bit times of idle are needed to constitute a full character time (10 or 11 bit times because of the start and stop bits).

When RWU is one and RWUID is zero, the idle condition that wakes up the receiver does not set the IDLE flag. The receiver wakes up and waits for the first data character of the next message which will set the RDRF flag and generate an interrupt if enabled. When RWUID is one, any idle condition sets the IDLE flag and generates an interrupt if enabled, regardless of whether RWU is zero or one.

The idle-line type (ILT) control bit selects one of two ways to detect an idle line. When ILT = 0, the idle bit counter starts after the start bit so the stop bit and any logic 1s at the end of a character count toward the full character time of idle. When ILT = 1, the idle bit counter does not start until after a stop bit time, so the idle detection is not affected by the data in the last character of the previous message.

13.3.3.2.2 Address-Mark Wakeup

When WAKE = 1, the receiver is configured for address-mark wakeup. In this mode, RWU is cleared automatically when the receiver detects a logic 1 in the most significant bit of a received character (eighth bit in M = 0 mode and ninth bit in M = 1 mode).

Address-mark wakeup allows messages to contain idle characters but requires that the MSB be reserved for use in address frames. The logic 1 MSB of an address frame clears the RWU bit before the stop bit is received and sets the RDRF flag. In this case the character with the MSB set is received even though the receiver was sleeping during most of this character time.

13.3.4 Interrupts and Status Flags

The SCI system has three separate interrupt vectors to reduce the amount of software needed to isolate the cause of the interrupt. One interrupt vector is associated with the transmitter for TDRE and TC events. Another interrupt vector is associated with the receiver for RDRF, IDLE, RXEDGIF and LBKDIF events, and a third vector is used for OR, NF, FE, and PF error conditions. Each of these ten interrupt sources can be separately masked by local interrupt enable masks. The flags can still be polled by software when the local masks are cleared to disable generation of hardware interrupt requests.

The SCI transmitter has two status flags that optionally can generate hardware interrupt requests. Transmit data register empty (TDRE) indicates when there is room in the transmit data buffer to write another transmit character to SCIxD. If the transmit interrupt enable (TIE) bit is set, a hardware interrupt will be requested whenever TDRE = 1. Transmit complete (TC) indicates that the transmitter is finished transmitting all data, preamble, and break characters and is idle with TxD at the inactive level. This flag is often used in systems with modems to determine when it is safe to turn off the modem. If the transmit complete interrupt enable (TCIE) bit is set, a hardware interrupt will be requested whenever TC = 1.

Instead of hardware interrupts, software polling may be used to monitor the TDRE and TC status flags if the corresponding TIE or TCIE local interrupt masks are 0s.

When a program detects that the receive data register is full (RDRF = 1), it gets the data from the receive data register by reading SCIxD. The RDRF flag is cleared by reading SCIxS1 while RDRF = 1 and then reading SCIxD.

When polling is used, this sequence is naturally satisfied in the normal course of the user program. If hardware interrupts are used, SCIxS1 must be read in the interrupt service routine (ISR). Normally, this is done in the ISR anyway to check for receive errors, so the sequence is automatically satisfied.

The IDLE status flag includes logic that prevents it from getting set repeatedly when the RxD line remains idle for an extended period of time. IDLE is cleared by reading SCIxS1 while IDLE = 1 and then reading SCIxD. After IDLE has been cleared, it cannot become set again until the receiver has received at least one new character and has set RDRF.

If the associated error was detected in the received character that caused RDRF to be set, the error flags — noise flag (NF), framing error (FE), and parity error flag (PF) — get set at the same time as RDRF. These flags are not set in overrun cases.

If RDRF was already set when a new character is ready to be transferred from the receive shifter to the receive data buffer, the overrun (OR) flag gets set instead the data along with any associated NF, FE, or PF condition is lost.

At any time, an active edge on the RxD serial data input pin causes the RXEDGIF flag to set. The RXEDGIF flag is cleared by writing a “1” to it. This function does depend on the receiver being enabled (RE = 1).

13.3.5 Additional SCI Functions

The following sections describe additional SCI functions.

13.3.5.1 8- and 9-Bit Data Modes

The SCI system (transmitter and receiver) can be configured to operate in 9-bit data mode by setting the M control bit in SCIxC1. In 9-bit mode, there is a ninth data bit to the left of the MSB of the SCI data register. For the transmit data buffer, this bit is stored in T8 in SCIxC3. For the receiver, the ninth bit is held in R8 in SCIxC3.

For coherent writes to the transmit data buffer, write to the T8 bit before writing to SCIxD.

If the bit value to be transmitted as the ninth bit of a new character is the same as for the previous character, it is not necessary to write to T8 again. When data is transferred from the transmit data buffer to the transmit shifter, the value in T8 is copied at the same time data is transferred from SCIxD to the shifter.

9-bit data mode typically is used in conjunction with parity to allow eight bits of data plus the parity in the ninth bit. Or it is used with address-mark wakeup so the ninth data bit can serve as the wakeup bit. In custom protocols, the ninth bit can also serve as a software-controlled marker.

13.3.5.2 Stop Mode Operation

During all stop modes, clocks to the SCI module are halted.

In stop1 and stop2 modes, all SCI register data is lost and must be re-initialized upon recovery from these two stop modes. No SCI module registers are affected in stop3 mode.

The receive input active edge detect circuit is still active in stop3 mode, but not in stop2.. An active edge on the receive input brings the CPU out of stop3 mode if the interrupt is not masked (RXEDGIE = 1).

Note, because the clocks are halted, the SCI module will resume operation upon exit from stop (only in stop3 mode). Software should ensure stop mode is not entered while there is a character being transmitted out of or received into the SCI module.

13.3.5.3 Loop Mode

When LOOPS = 1, the RSRC bit in the same register chooses between loop mode (RSRC = 0) or single-wire mode (RSRC = 1). Loop mode is sometimes used to check software, independent of connections in the external system, to help isolate system problems. In this mode, the transmitter output is internally connected to the receiver input and the RxD pin is not used by the SCI, so it reverts to a general-purpose port I/O pin.

13.3.5.4 Single-Wire Operation

When LOOPS = 1, the RSRC bit in the same register chooses between loop mode (RSRC = 0) or single-wire mode (RSRC = 1). Single-wire mode is used to implement a half-duplex serial connection. The receiver is internally connected to the transmitter output and to the TxD pin. The RxD pin is not used and reverts to a general-purpose port I/O pin.

In single-wire mode, the TXDIR bit in SCIxC3 controls the direction of serial data on the TxD pin. When TXDIR = 0, the TxD pin is an input to the SCI receiver and the transmitter is temporarily disconnected from the TxD pin so an external device can send serial data to the receiver. When TXDIR = 1, the TxD pin is an output driven by the transmitter. In single-wire mode, the internal loop back connection from the transmitter to the receiver causes the receiver to receive characters that are sent out by the transmitter.

Chapter 14
Serial Peripheral Interface (S08SPIV3)

14.1 Introduction

The MC9S08AC60 Series has one serial peripheral interface (SPI) module. See Appendix A, “Electrical Characteristics and Timing Specifications,” for SPI electrical parametric information.

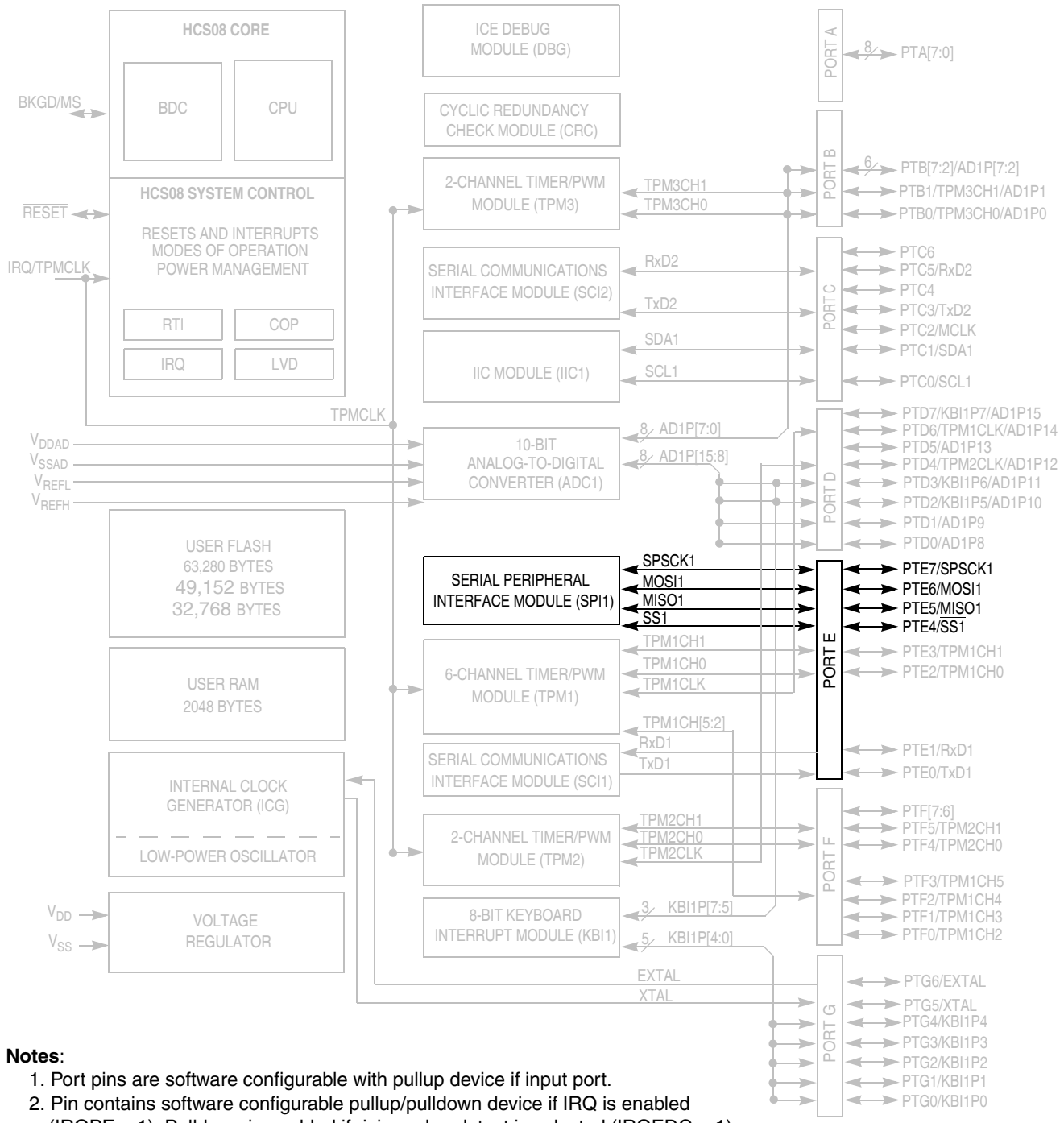

Notes:

1. Port pins are software configurable with pullup device if input port.
2. Pin contains software configurable pullup/pulldown device if IRQ is enabled (IRQPE = 1). Pulldown is enabled if rising edge detect is selected (IRQEDG = 1)
3. Pin contains integrated pullup device.
4. PTD3, PTD2, PTD7, and PTG4 contain both pullup and pulldown devices. Pulldown enabled when KBI is enabled (KBIPEn = 1) and rising edge is selected (KBEDGn = 1).
5. TPMCLK, TPM1CLK, and TPM2CLK options are configured via software; out of reset, TPM1CLK, TPM2CLK, and TPMCLK are available to TPM1, TPM2, and TPM3 respectively.

Figure 14-1. Block Diagram Highlighting the SPI Module

14.1.1 Features

Features of the SPI module include:

- Master or slave mode operation
- Full-duplex or single-wire bidirectional option
- Programmable transmit bit rate
- Double-buffered transmit and receive
- Serial clock phase and polarity options
- Slave select output
- Selectable MSB-first or LSB-first shifting

14.1.2 Block Diagrams

This section includes block diagrams showing SPI system connections, the internal organization of the SPI module, and the SPI clock dividers that control the master mode bit rate.

14.1.2.1 SPI System Block Diagram

Figure 14-2 shows the SPI modules of two MCUs connected in a master-slave arrangement. The master device initiates all SPI data transfers. During a transfer, the master shifts data out (on the MOSI pin) to the slave while simultaneously shifting data in (on the MISO pin) from the slave. The transfer effectively exchanges the data that was in the SPI shift registers of the two SPI systems. The SPSCK signal is a clock output from the master and an input to the slave. The slave device must be selected by a low level on the slave select input ($\overline{SS}$ pin). In this system, the master device has configured its $\overline{SS}$ pin as an optional slave select output.

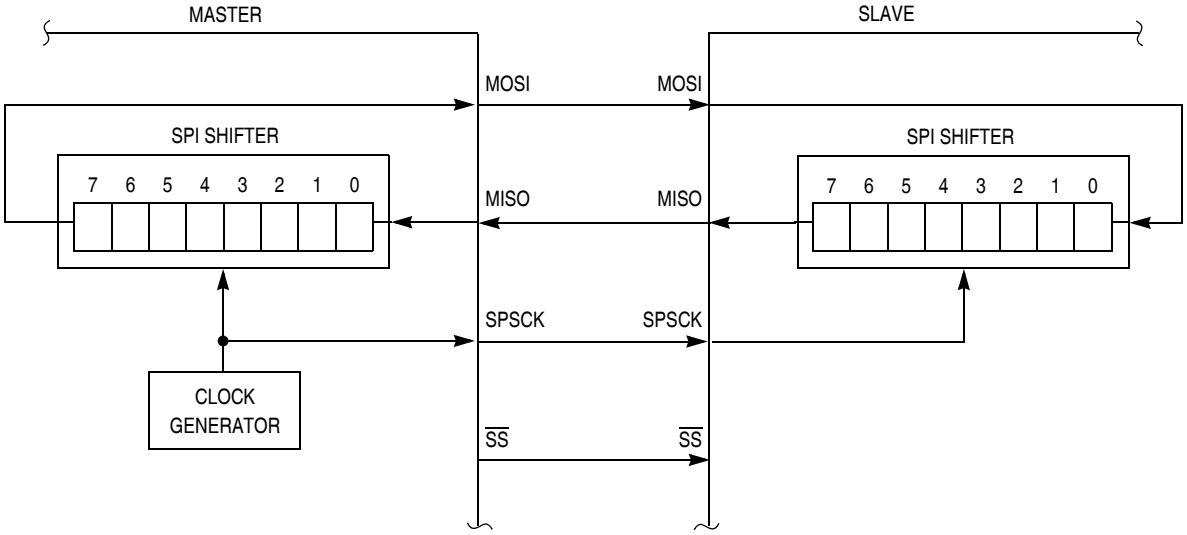

Figure 14-2. SPI System Connections

The most common uses of the SPI system include connecting simple shift registers for adding input or output ports or connecting small peripheral devices such as serial A/D or D/A converters. Although Figure 14-2 shows a system where data is exchanged between two MCUs, many practical systems involve simpler connections where data is unidirectionally transferred from the master MCU to a slave or from a slave to the master MCU.

14.1.2.2 SPI Module Block Diagram

Figure 14-3 is a block diagram of the SPI module. The central element of the SPI is the SPI shift register. Data is written to the double-buffered transmitter (write to SPID) and gets transferred to the SPI shift register at the start of a data transfer. After shifting in a byte of data, the data is transferred into the double-buffered receiver where it can be read (read from SPID). Pin multiplexing logic controls connections between MCU pins and the SPI module.

When the SPI is configured as a master, the clock output is routed to the SPSCK pin, the shifter output is routed to MOSI, and the shifter input is routed from the MISO pin.

When the SPI is configured as a slave, the SPSCK pin is routed to the clock input of the SPI, the shifter output is routed to MISO, and the shifter input is routed from the MOSI pin.

In the external SPI system, simply connect all SPSCK pins to each other, all MISO pins together, and all MOSI pins together. Peripheral devices often use slightly different names for these pins.

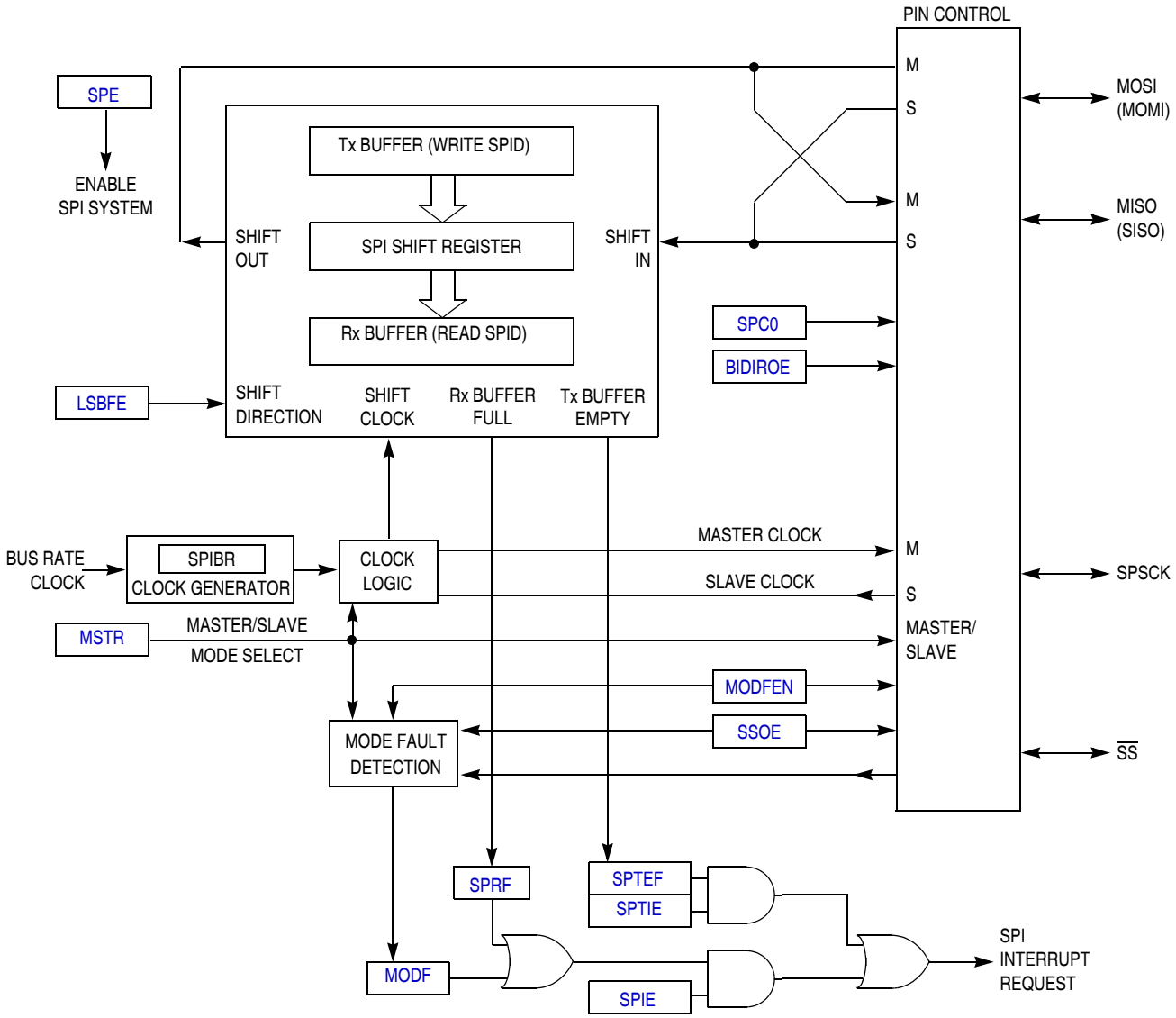

Figure 14-3. SPI Module Block Diagram

14.1.3 SPI Baud Rate Generation

As shown in Figure 14-4, the clock source for the SPI baud rate generator is the bus clock. The three prescale bits (SPPR2:SPPR1:SPPR0) choose a prescale divisor of 1, 2, 3, 4, 5, 6, 7, or 8. The three rate select bits (SPR3:SPR2:SPR1:SPR0) divide the output of the prescaler stage by 2, 4, 8, 16, 32, 64, 128, 256,or 512 to get the internal SPI master mode bit-rate clock.

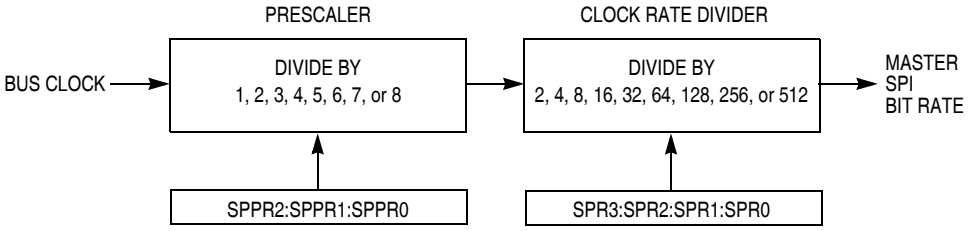

Figure 14-4. SPI Baud Rate Generation

14.2 External Signal Description

The SPI optionally shares four port pins. The function of these pins depends on the settings of SPI control bits. When the SPI is disabled (SPE = 0), these four pins revert to being general-purpose port I/O pins that are not controlled by the SPI.

14.2.1 SPSCK — SPI Serial Clock

When the SPI is enabled as a slave, this pin is the serial clock input. When the SPI is enabled as a master, this pin is the serial clock output.

14.2.2 MOSI — Master Data Out, Slave Data In

When the SPI is enabled as a master and SPI pin control zero (SPC0) is 0 (not bidirectional mode), this pin is the serial data output. When the SPI is enabled as a slave and SPC0 = 0, this pin is the serial data input. If SPC0 = 1 to select single-wire bidirectional mode, and master mode is selected, this pin becomes the bidirectional data I/O pin (MOMI). Also, the bidirectional mode output enable bit determines whether the pin acts as an input (BIDIROE = 0) or an output (BIDIROE = 1). If SPC0 = 1 and slave mode is selected, this pin is not used by the SPI and reverts to being a general-purpose port I/O pin.

14.2.3 MISO — Master Data In, Slave Data Out

When the SPI is enabled as a master and SPI pin control zero (SPC0) is 0 (not bidirectional mode), this pin is the serial data input. When the SPI is enabled as a slave and SPC0 = 0, this pin is the serial data output. If SPC0 = 1 to select single-wire bidirectional mode, and slave mode is selected, this pin becomes the bidirectional data I/O pin (SISO) and the bidirectional mode output enable bit determines whether the pin acts as an input (BIDIROE = 0) or an output (BIDIROE = 1). If SPC0 = 1 and master mode is selected, this pin is not used by the SPI and reverts to being a general-purpose port I/O pin.

14.2.4 $\overline{SS}$ — Slave Select

When the SPI is enabled as a slave, this pin is the low-true slave select input. When the SPI is enabled as a master and mode fault enable is off (MODFEN = 0), this pin is not used by the SPI and reverts to being a general-purpose port I/O pin. When the SPI is enabled as a master and MODFEN = 1, the slave select output enable bit determines whether this pin acts as the mode fault input (SSOE = 0) or as the slave select output (SSOE = 1).

14.3 Modes of Operation

14.3.1 SPI in Stop Modes

The SPI is disabled in all stop modes, regardless of the settings before executing the STOP instruction. During either stop1 or stop2 mode, the SPI module will be fully powered down. Upon wake-up from stop1 or stop2 mode, the SPI module will be in the reset state. During stop3 mode, clocks to the SPI module are halted. No registers are affected. If stop3 is exited with a reset, the SPI will be put into its reset state. If stop3 is exited with an interrupt, the SPI continues from the state it was in when stop3 was entered.

14.4 Register Definition

The SPI has five 8-bit registers to select SPI options, control baud rate, report SPI status, and for transmit/receive data.

Refer to the direct-page register summary in the Memory chapter of this data sheet for the absolute address assignments for all SPI registers. This section refers to registers and control bits only by their names, and a Freescale-provided equate or header file is used to translate these names into the appropriate absolute addresses.

14.4.1 SPI Control Register 1 (SPIC1)

This read/write register includes the SPI enable control, interrupt enables, and configuration options.

	7	6	5	4	3	2	1	0
R W	SPIE	SPE	SPTIE	MSTR	CPOL	CPHA	SSOE	LSBFE
Reset	0	0	0	0	0	1	0	0

Figure 14-5. SPI Control Register 1 (SPIC1)

Table 14-1. SPIC1 Field Descriptions

Field	Description
7 SPIE	**SPI Interrupt Enable (for SPRF and MODF)** — This is the interrupt enable for SPI receive buffer full (SPRF) and mode fault (MODF) events. 0 Interrupts from SPRF and MODF inhibited (use polling) 1 When SPRF or MODF is 1, request a hardware interrupt
6 SPE	**SPI System Enable** — Disabling the SPI halts any transfer that is in progress, clears data buffers, and initializes internal state machines. SPRF is cleared and SPTEF is set to indicate the SPI transmit data buffer is empty. 0 SPI system inactive 1 SPI system enabled
5 SPTIE	**SPI Transmit Interrupt Enable** — This is the interrupt enable bit for SPI transmit buffer empty (SPTEF). 0 Interrupts from SPTEF inhibited (use polling) 1 When SPTEF is 1, hardware interrupt requested

Table 14-1. SPIC1 Field Descriptions (continued)

Field	Description
4 MSTR	**Master/Slave Mode Select** 0 SPI module configured as a slave SPI device 1 SPI module configured as a master SPI device
3 CPOL	**Clock Polarity** — This bit effectively places an inverter in series with the clock signal from a master SPI or to a slave SPI device. Refer to Section 14.5.1, "SPI Clock Formats" for more details. 0 Active-high SPI clock (idles low) 1 Active-low SPI clock (idles high)
2 CPHA	**Clock Phase** — This bit selects one of two clock formats for different kinds of synchronous serial peripheral devices. Refer to Section 14.5.1, "SPI Clock Formats" for more details. 0 First edge on SPSCK occurs at the middle of the first cycle of an 8-cycle data transfer 1 First edge on SPSCK occurs at the start of the first cycle of an 8-cycle data transfer
1 SSOE	**Slave Select Output Enable** — This bit is used in combination with the mode fault enable (MODFEN) bit in SPCR2 and the master/slave (MSTR) control bit to determine the function of the $\overline{SS}$ pin as shown in Table 14-2.
0 LSBFE	**LSB First (Shifter Direction)** 0 SPI serial data transfers start with most significant bit 1 SPI serial data transfers start with least significant bit

Table 14-2. $\overline{SS}$ Pin Function

MODFEN	SSOE	Master Mode	Slave Mode
0	0	General-purpose I/O (not SPI)	Slave select input
0	1	General-purpose I/O (not SPI)	Slave select input
1	0	$\overline{SS}$ input for mode fault	Slave select input
1	1	Automatic $\overline{SS}$ output	Slave select input

NOTE

Ensure that the SPI should not be disabled (SPE=0) at the same time as a bit change to the CPHA bit. These changes should be performed as separate operations or unexpected behavior may occur.

14.4.2 SPI Control Register 2 (SPIC2)

This read/write register is used to control optional features of the SPI system. Bits 7, 6, 5, and 2 are not implemented and always read 0.

	7	6	5	4	3	2	1	0
R	0	0	0	MODFEN	BIDIROE	0	SPISWAI	SPC0
W								
Reset	0	0	0	0	0	0	0	0

= Unimplemented or Reserved

Figure 14-6. SPI Control Register 2 (SPIC2)

Table 14-3. SPIC2 Register Field Descriptions

Field	Description
4 MODFEN	**Master Mode-Fault Function Enable** — When the SPI is configured for slave mode, this bit has no meaning or effect. (The $\overline{SS}$ pin is the slave select input.) In master mode, this bit determines how the $\overline{SS}$ pin is used (refer to Table 14-2 for more details). 0 Mode fault function disabled, master $\overline{SS}$ pin reverts to general-purpose I/O not controlled by SPI 1 Mode fault function enabled, master $\overline{SS}$ pin acts as the mode fault input or the slave select output
3 BIDIROE	**Bidirectional Mode Output Enable** — When bidirectional mode is enabled by SPI pin control 0 (SPC0) = 1, BIDIROE determines whether the SPI data output driver is enabled to the single bidirectional SPI I/O pin. Depending on whether the SPI is configured as a master or a slave, it uses either the MOSI (MOMI) or MISO (SISO) pin, respectively, as the single SPI data I/O pin. When SPC0 = 0, BIDIROE has no meaning or effect. 0 Output driver disabled so SPI data I/O pin acts as an input 1 SPI I/O pin enabled as an output
1 SPISWAI	**SPI Stop in Wait Mode** 0 SPI clocks continue to operate in wait mode 1 SPI clocks stop when the MCU enters wait mode
0 SPC0	**SPI Pin Control 0** — The SPC0 bit chooses single-wire bidirectional mode. If MSTR = 0 (slave mode), the SPI uses the MISO (SISO) pin for bidirectional SPI data transfers. If MSTR = 1 (master mode), the SPI uses the MOSI (MOMI) pin for bidirectional SPI data transfers. When SPC0 = 1, BIDIROE is used to enable or disable the output driver for the single bidirectional SPI I/O pin. 0 SPI uses separate pins for data input and data output 1 SPI configured for single-wire bidirectional operation

14.4.3 SPI Baud Rate Register (SPIBR)

This register is used to set the prescaler and bit rate divisor for an SPI master. This register may be read or written at any time.

	7	6	5	4	3	2	1	0
R	0	SPPR2	SPPR1	SPPR0	SPR3	SPR2	SPR1	SPR0
W								
Reset	0	0	0	0	0	0	0	0

= Unimplemented or Reserved

Figure 14-7. SPI Baud Rate Register (SPIBR)

Table 14-4. SPIBR Register Field Descriptions

Field	Description
6:4 SPPR[2:0]	**SPI Baud Rate Prescale Divisor** — This 3-bit field selects one of eight divisors for the SPI baud rate prescaler as shown in Table 14-5. The input to this prescaler is the bus rate clock (BUSCLK). The output of this prescaler drives the input of the SPI baud rate divider (see Figure 14-4).
2:0 SPR[3:0]	**SPI Baud Rate Divisor** — This 4-bit field selects one of eight divisors for the SPI baud rate divider as shown in Table 14-6. The input to this divider comes from the SPI baud rate prescaler (see Figure 14-4). The output of this divider is the SPI bit rate clock for master mode.

Table 14-5. SPI Baud Rate Prescaler Divisor

SPPR2:SPPR1:SPPR0	Prescaler Divisor
0:0:0	1
0:0:1	2
0:1:0	3
0:1:1	4
1:0:0	5
1:0:1	6
1:1:0	7
1:1:1	8

Table 14-6. SPI Baud Rate Divisor

SPR3:SPR2:SPR1:SPR0	Rate Divisor
0:0:0:0	2
0:0:0:1	4
0:0:1:0	8
0:0:1:1	16
0:1:0:0	32
0:1:0:1	64
0:1:1:0	128
0:1:1:1	256
1:0:0:0	512
All other combinations	reserved

14.4.4 SPI Status Register (SPIS)

This register has three read-only status bits. Bits 6, 3, 2, 1, and 0 are not implemented and always read 0. Writes have no meaning or effect.

	7	6	5	4	3	2	1	0
R	SPRF	0	SPTEF	MODF	0	0	0	0
W								
Reset	0	0	1	0	0	0	0	0

= Unimplemented or Reserved

Figure 14-8. SPI Status Register (SPIS)

Table 14-7. SPIS Register Field Descriptions

Field	Description
7 SPRF	**SPI Read Buffer Full Flag** — SPRF is set at the completion of an SPI transfer to indicate that received data may be read from the SPI data register (SPID). SPRF is cleared by reading SPRF while it is set, then reading the SPI data register. 0 No data available in the receive data buffer 1 Data available in the receive data buffer
5 SPTEF	**SPI Transmit Buffer Empty Flag** — This bit is set when there is room in the transmit data buffer. It is cleared by reading SPIS with SPTEF set, followed by writing a data value to the transmit buffer at SPID. SPIS must be read with SPTEF = 1 before writing data to SPID or the SPID write will be ignored. SPTEF generates an SPTEF CPU interrupt request if the SPTIE bit in the SPIC1 is also set. SPTEF is automatically set when a data byte transfers from the transmit buffer into the transmit shift register. For an idle SPI (no data in the transmit buffer or the shift register and no transfer in progress), data written to SPID is transferred to the shifter almost immediately so SPTEF is set within two bus cycles allowing a second 8-bit data value to be queued into the transmit buffer. After completion of the transfer of the value in the shift register, the queued value from the transmit buffer will automatically move to the shifter and SPTEF will be set to indicate there is room for new data in the transmit buffer. If no new data is waiting in the transmit buffer, SPTEF simply remains set and no data moves from the buffer to the shifter. 0 SPI transmit buffer not empty 1 SPI transmit buffer empty
4 MODF	**Master Mode Fault Flag** — MODF is set if the SPI is configured as a master and the slave select input goes low, indicating some other SPI device is also configured as a master. The $\overline{SS}$ pin acts as a mode fault error input only when MSTR = 1, MODFEN = 1, and SSOE = 0; otherwise, MODF will never be set. MODF is cleared by reading MODF while it is 1, then writing to SPI control register 1 (SPIC1). 0 No mode fault error 1 Mode fault error detected

14.4.5 SPI Data Register (SPID)

	7	6	5	4	3	2	1	0
R W	Bit 7	6	5	4	3	2	1	Bit 0
Reset	0	0	0	0	0	0	0	0

Figure 14-9. SPI Data Register (SPID)

Reads of this register return the data read from the receive data buffer. Writes to this register write data to the transmit data buffer. When the SPI is configured as a master, writing data to the transmit data buffer initiates an SPI transfer.

Data should not be written to the transmit data buffer unless the SPI transmit buffer empty flag (SPTEF) is set, indicating there is room in the transmit buffer to queue a new transmit byte.

Data may be read from SPID any time after SPRF is set and before another transfer is finished. Failure to read the data out of the receive data buffer before a new transfer ends causes a receive overrun condition and the data from the new transfer is lost.

14.5 Functional Description

An SPI transfer is initiated by checking for the SPI transmit buffer empty flag (SPTEF = 1) and then writing a byte of data to the SPI data register (SPID) in the master SPI device. When the SPI shift register is available, this byte of data is moved from the transmit data buffer to the shifter, SPTEF is set to indicate there is room in the buffer to queue another transmit character if desired, and the SPI serial transfer starts.

During the SPI transfer, data is sampled (read) on the MISO pin at one SPSCK edge and shifted, changing the bit value on the MOSI pin, one-half SPSCK cycle later. After eight SPSCK cycles, the data that was in the shift register of the master has been shifted out the MOSI pin to the slave while eight bits of data were shifted in the MISO pin into the master's shift register. At the end of this transfer, the received data byte is moved from the shifter into the receive data buffer and SPRF is set to indicate the data can be read by reading SPID. If another byte of data is waiting in the transmit buffer at the end of a transfer, it is moved into the shifter, SPTEF is set, and a new transfer is started.

Normally, SPI data is transferred most significant bit (MSB) first. If the least significant bit first enable (LSBFE) bit is set, SPI data is shifted LSB first.

When the SPI is configured as a slave, its $\overline{SS}$ pin must be driven low before a transfer starts and $\overline{SS}$ must stay low throughout the transfer. If a clock format where CPHA = 0 is selected, $\overline{SS}$ must be driven to a logic 1 between successive transfers. If CPHA = 1, $\overline{SS}$ may remain low between successive transfers. See Section 14.5.1, "SPI Clock Formats" for more details.

Because the transmitter and receiver are double buffered, a second byte, in addition to the byte currently being shifted out, can be queued into the transmit data buffer, and a previously received character can be in the receive data buffer while a new character is being shifted in. The SPTEF flag indicates when the transmit buffer has room for a new character. The SPRF flag indicates when a received character is available in the receive data buffer. The received character must be read out of the receive buffer (read SPID) before the next transfer is finished or a receive overrun error results.

In the case of a receive overrun, the new data is lost because the receive buffer still held the previous character and was not ready to accept the new data. There is no indication for such an overrun condition so the application system designer must ensure that previous data has been read from the receive buffer before a new transfer is initiated.

14.5.1 SPI Clock Formats

To accommodate a wide variety of synchronous serial peripherals from different manufacturers, the SPI system has a clock polarity (CPOL) bit and a clock phase (CPHA) control bit to select one of four clock formats for data transfers. CPOL selectively inserts an inverter in series with the clock. CPHA chooses between two different clock phase relationships between the clock and data.

Figure 14-10 shows the clock formats when CPHA = 1. At the top of the figure, the eight bit times are shown for reference with bit 1 starting at the first SPSCK edge and bit 8 ending one-half SPSCK cycle after the sixteenth SPSCK edge. The MSB first and LSB first lines show the order of SPI data bits depending on the setting in LSBFE. Both variations of SPSCK polarity are shown, but only one of these waveforms applies for a specific transfer, depending on the value in CPOL. The SAMPLE IN waveform applies to the MOSI input of a slave or the MISO input of a master. The MOSI waveform applies to the

MOSI output pin from a master and the MISO waveform applies to the MISO output from a slave. The $\overline{SS}$ OUT waveform applies to the slave select output from a master (provided MODFEN and SSOE = 1). The master $\overline{SS}$ output goes to active low one-half SPSCK cycle before the start of the transfer and goes back high at the end of the eighth bit time of the transfer. The $\overline{SS}$ IN waveform applies to the slave select input of a slave.

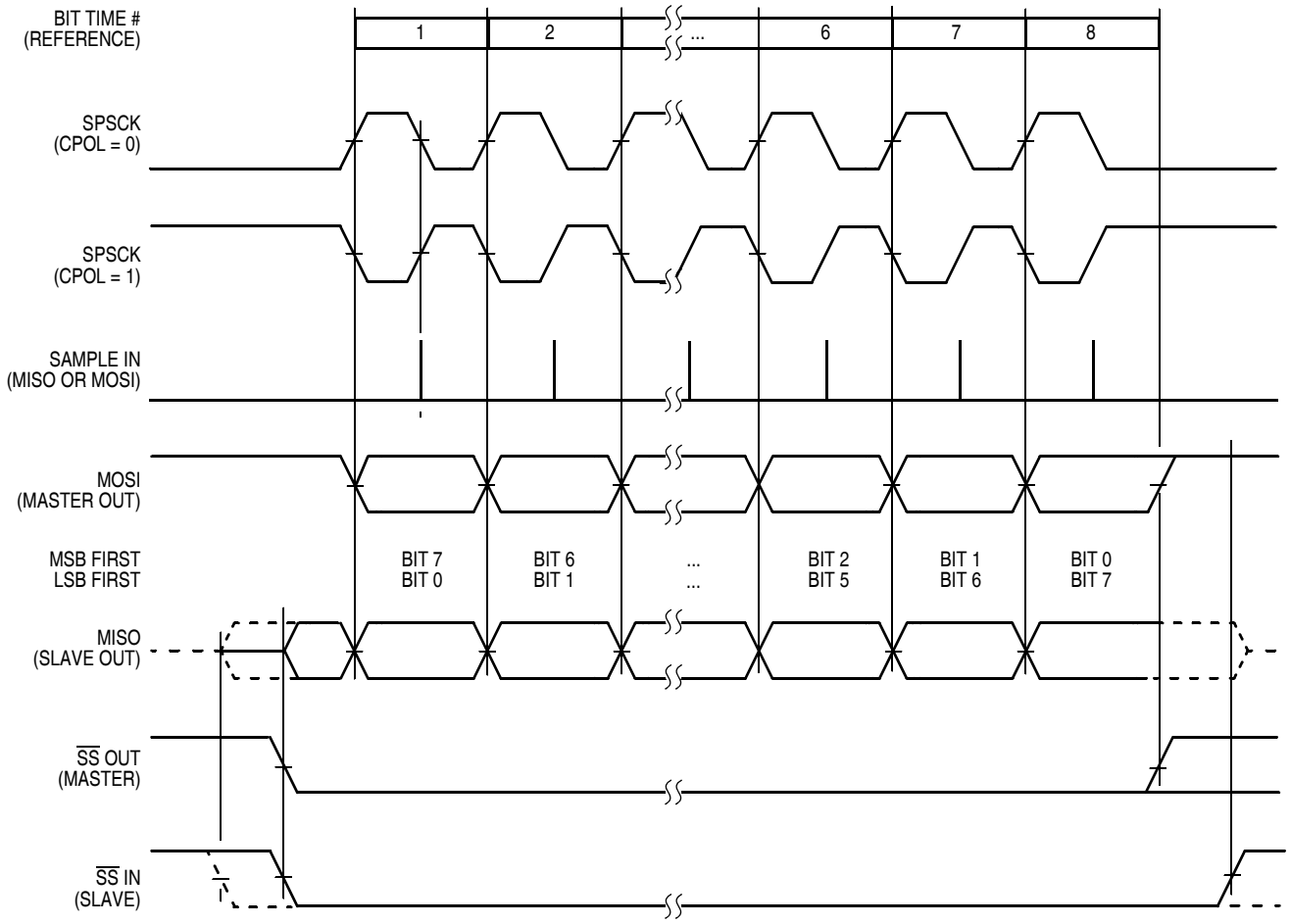

Figure 14-10. SPI Clock Formats (CPHA = 1)

When CPHA = 1, the slave begins to drive its MISO output when $\overline{SS}$ goes to active low, but the data is not defined until the first SPSCK edge. The first SPSCK edge shifts the first bit of data from the shifter onto the MOSI output of the master and the MISO output of the slave. The next SPSCK edge causes both the master and the slave to sample the data bit values on their MISO and MOSI inputs, respectively. At the third SPSCK edge, the SPI shifter shifts one bit position which shifts in the bit value that was just sampled, and shifts the second data bit value out the other end of the shifter to the MOSI and MISO outputs of the master and slave, respectively. When CHPA = 1, the slave's $\overline{SS}$ input is not required to go to its inactive high level between transfers.

Figure 14-11 shows the clock formats when CPHA = 0. At the top of the figure, the eight bit times are shown for reference with bit 1 starting as the slave is selected ($\overline{SS}$ IN goes low), and bit 8 ends at the last SPSCK edge. The MSB first and LSB first lines show the order of SPI data bits depending on the setting

in LSBFE. Both variations of SPSCK polarity are shown, but only one of these waveforms applies for a specific transfer, depending on the value in CPOL. The SAMPLE IN waveform applies to the MOSI input of a slave or the MISO input of a master. The MOSI waveform applies to the MOSI output pin from a master and the MISO waveform applies to the MISO output from a slave. The $\overline{SS}$ OUT waveform applies to the slave select output from a master (provided MODFEN and SSOE = 1). The master $\overline{SS}$ output goes to active low at the start of the first bit time of the transfer and goes back high one-half SPSCK cycle after the end of the eighth bit time of the transfer. The $\overline{SS}$ IN waveform applies to the slave select input of a slave.

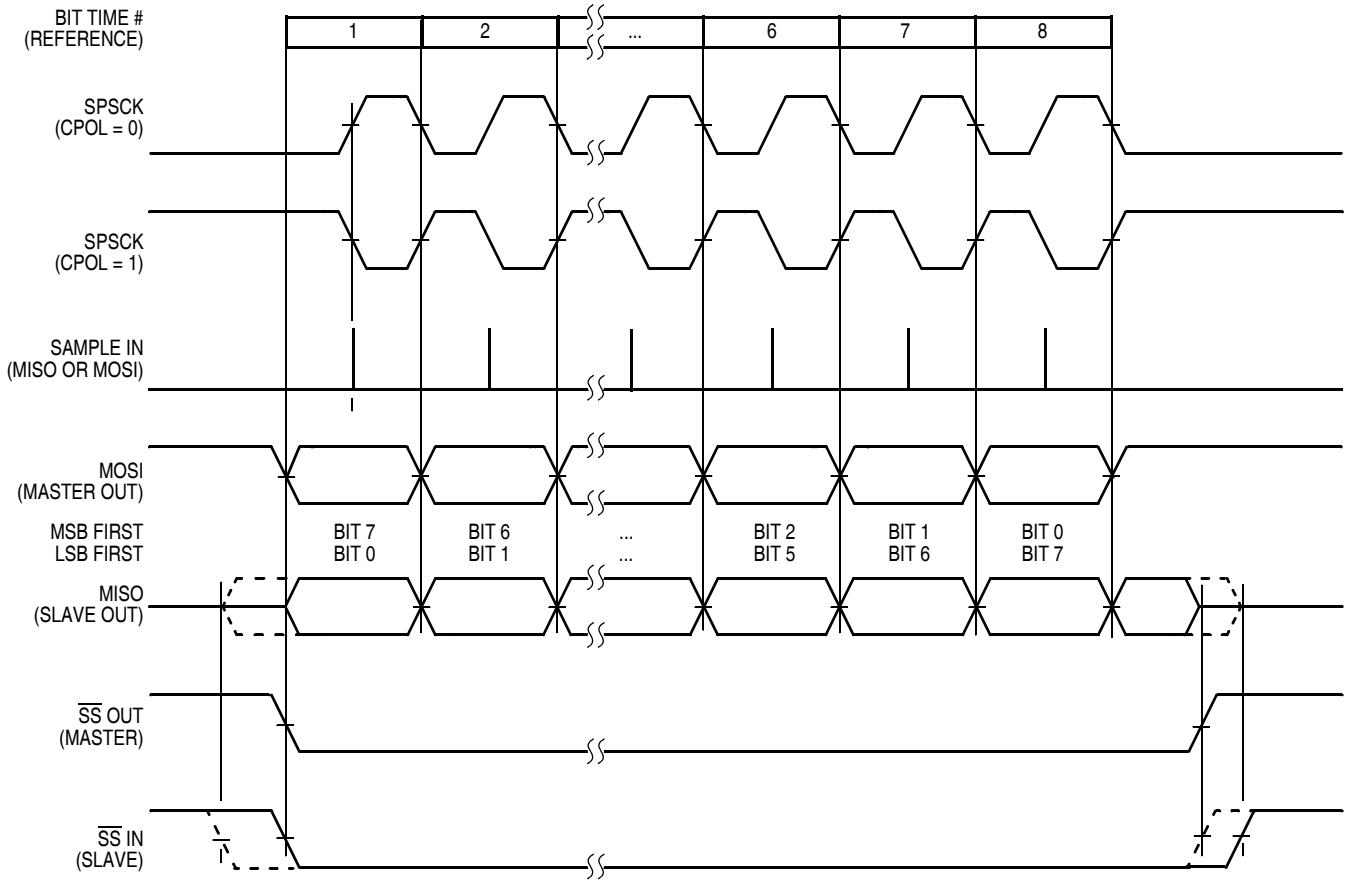

Figure 14-11. SPI Clock Formats (CPHA = 0)

When CPHA = 0, the slave begins to drive its MISO output with the first data bit value (MSB or LSB depending on LSBFE) when $\overline{SS}$ goes to active low. The first SPSCK edge causes both the master and the slave to sample the data bit values on their MISO and MOSI inputs, respectively. At the second SPSCK edge, the SPI shifter shifts one bit position which shifts in the bit value that was just sampled and shifts the second data bit value out the other end of the shifter to the MOSI and MISO outputs of the master and slave, respectively. When CPHA = 0, the slave's $\overline{SS}$ input must go to its inactive high level between transfers.

14.5.2 SPI Interrupts

There are three flag bits, two interrupt mask bits, and one interrupt vector associated with the SPI system. The SPI interrupt enable mask (SPIE) enables interrupts from the SPI receiver full flag (SPRF) and mode fault flag (MODF). The SPI transmit interrupt enable mask (SPTIE) enables interrupts from the SPI transmit buffer empty flag (SPTEF). When one of the flag bits is set, and the associated interrupt mask bit is set, a hardware interrupt request is sent to the CPU. If the interrupt mask bits are cleared, software can poll the associated flag bits instead of using interrupts. The SPI interrupt service routine (ISR) should check the flag bits to determine what event caused the interrupt. The service routine should also clear the flag bit(s) before returning from the ISR (usually near the beginning of the ISR).

14.5.3 Mode Fault Detection

A mode fault occurs and the mode fault flag (MODF) becomes set when a master SPI device detects an error on the $\overline{SS}$ pin (provided the $\overline{SS}$ pin is configured as the mode fault input signal). The $\overline{SS}$ pin is configured to be the mode fault input signal when MSTR = 1, mode fault enable is set (MODFEN = 1), and slave select output enable is clear (SSOE = 0).

The mode fault detection feature can be used in a system where more than one SPI device might become a master at the same time. The error is detected when a master's $\overline{SS}$ pin is low, indicating that some other SPI device is trying to address this master as if it were a slave. This could indicate a harmful output driver conflict, so the mode fault logic is designed to disable all SPI output drivers when such an error is detected.

When a mode fault is detected, MODF is set and MSTR is cleared to change the SPI configuration back to slave mode. The output drivers on the SPSCK, MOSI, and MISO (if not bidirectional mode) are disabled.

MODF is cleared by reading it while it is set, then writing to the SPI control register 1 (SPIC1). User software should verify the error condition has been corrected before changing the SPI back to master mode.

Chapter 15
Timer/PWM (S08TPMV3)

15.1 Introduction

The MC9S08AC60 Series includes three independent timer/PWM (TPM) modules which support traditional input capture, output compare, or buffered edge-aligned pulse-width modulation (PWM) on each channel. The timer system in the MC9S08AC60 Series includes a 6-channel TPM1, a separate 2-channel TPM2 and a separate 2-channel TPM3.

A control bit in each TPM configures all channels in that timer to operate as center-aligned PWM functions. In each TPM, timing functions are based on a separate 16-bit counter with prescaler and modulo features to control frequency and range (period between overflows) of the time reference.

The use of the fixed system clock, XCLK, as the clock source for any of the TPM modules allows the TPM prescaler to run using the oscillator rate divided by two (ICGERCLK/2). This option is only available if the ICG is configured in FEE mode and the proper conditions are met (see Chapter 10, "Internal Clock Generator (S08ICGV4)"). In all other ICG modes this selection is redundant because XCLK is the same as BUSCLK.

An external clock source can be connected to the TPMxCLK pin. The maximum frequency for TPMxCLK is the bus clock frequency divided by 4. For the MC9S08AC60 Series, TPMCLK, TPM1CLK, and TPM2CLK options are configured via software using the TPMCCFG bit in the SOPT2 register; out of reset, TPM1CLK, and TPM2CLK, and TPMCLK is connected to TPM1, TPM2, and TPM3 respectively. (TPMCCFG = 1).

15.2 Features

Timer system features include:

- Clock source to prescaler for each TPM is independently selectable as bus clock, fixed system clock, or an external pin.
- 16-bit free-running or up/down (CPWM) count operation
- 16-bit modulus register to control counter range
- Timer system enable
- One interrupt per channel plus a terminal count interrupt for each TPM module
- Each channel may be input capture, output compare, or buffered edge-aligned PWM
- Rising-edge, falling-edge, or any-edge input capture trigger
- Set, clear, or toggle output compare action
- Selectable polarity on PWM outputs
- Each TPM may be configured for buffered, center-aligned pulse-width modulation (CPWM) on all channels

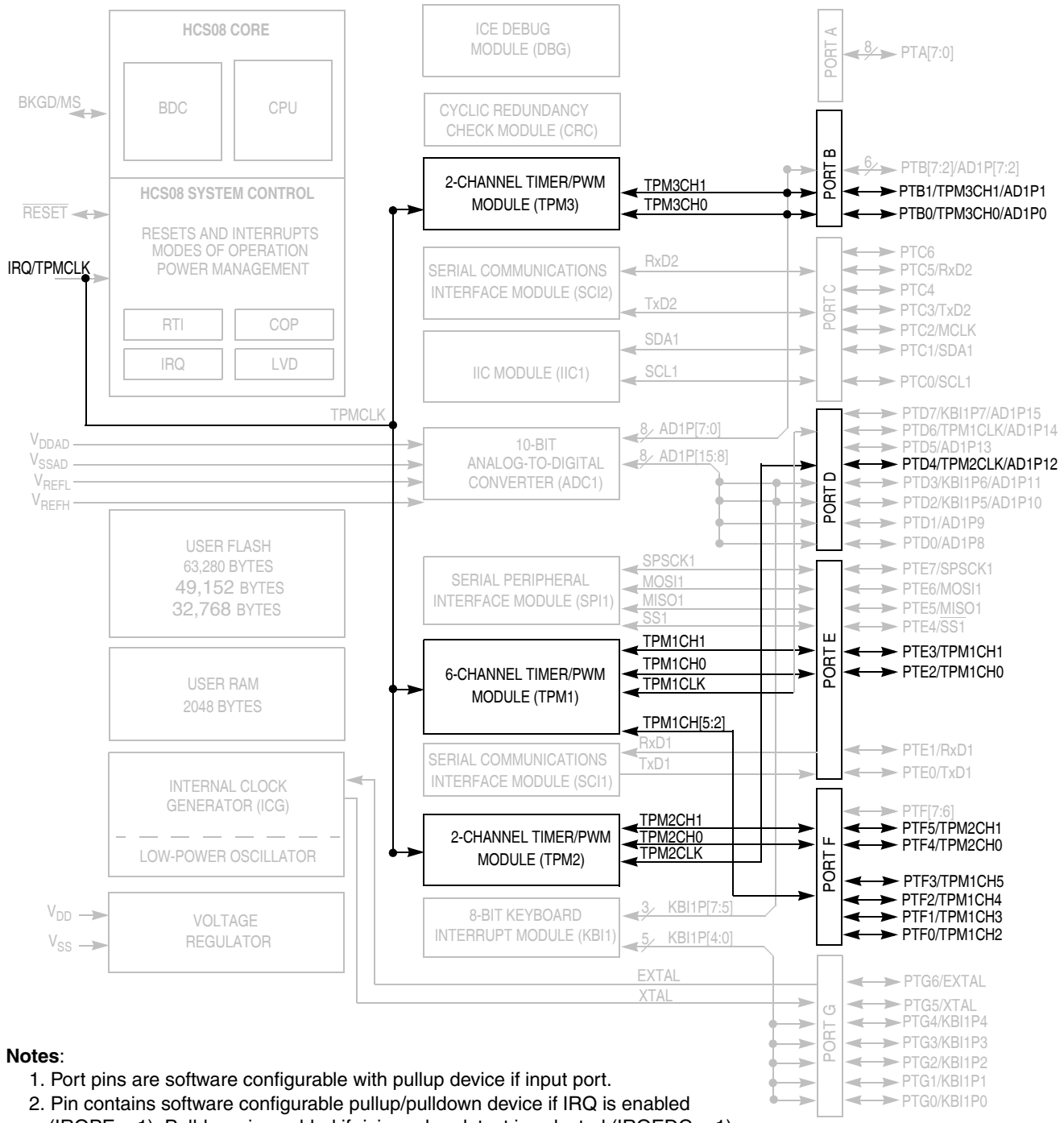

Notes:

1. Port pins are software configurable with pullup device if input port.
2. Pin contains software configurable pullup/pulldown device if IRQ is enabled (IRQPE = 1). Pulldown is enabled if rising edge detect is selected (IRQEDG = 1)
3. Pin contains integrated pullup device.
4. PTD3, PTD2, PTD7, and PTG4 contain both pullup and pulldown devices. Pulldown enabled when KBI is enabled (KBIPEn = 1) and rising edge is selected (KBEDGn = 1).
5. TPMCLK, TPM1CLK, and TPM2CLK options are configured via software; out of reset, TPM1CLK, TPM2CLK, and TPMCLK are available to TPM1, TPM2, and TPM3 respectively.

Figure 15-1. Block Diagram Highlighting the TPM Module

15.3 TPMV3 Differences from Previous Versions

The TPMV3 is the latest version of the Timer/PWM module that addresses errata found in previous versions. The following section outlines the differences between TPMV3 and TPMV2 modules, and any considerations that should be taken when porting code.

Table 15-1. TPMV2 and TPMV3 Porting Considerations

Action	TPMV3	TPMV2
Write to TPMxCnTH:L registers[1]		
Any write to TPMxCNTH or TPMxCNTL registers	Clears the TPM counter (TPMxCNTH:L) and the prescaler counter.	Clears the TPM counter (TPMxCNTH:L) only.
Read of TPMxCNTH:L registers[1]		
In BDM mode, any read of TPMxCNTH:L registers	Returns the value of the TPM counter that is frozen.	If only one byte of the TPMxCNTH:L registers was read before the BDM mode became active, returns the latched value of TPMxCNTH:L from the read buffer (instead of the frozen TPM counter value).
In BDM mode, a write to TPMxSC, TPMxCNTH or TPMxCNTL	Clears this read coherency mechanism.	Does not clear this read coherency mechanism.
Read of TPMxCnVH:L registers[2]		
In BDM mode, any read of TPMxCnVH:L registers	Returns the value of the TPMxCnVH:L register.	If only one byte of the TPMxCnVH:L registers was read before the BDM mode became active, returns the latched value of TPMxCNTH:L from the read buffer (instead of the value in the TPMxCnVH:L registers).
In BDM mode, a write to TPMxCnSC	Clears this read coherency mechanism.	Does not clear this read coherency mechanism.
Write to TPMxCnVH:L registers		
In Input Capture mode, writes to TPMxCnVH:L registers[3]	Not allowed.	Allowed.
In Output Compare mode, when (CLKSB:CLKSA not = 0:0), writes to TPMxCnVH:L registers[3]	Update the TPMxCnVH:L registers with the value of their write buffer at the next change of the TPM counter (end of the prescaler counting) after the second byte is written.	Always update these registers when their second byte is written.

Table 15-1. TPMV2 and TPMV3 Porting Considerations (continued)

Action	TPMV3	TPMV2
In Edge-Aligned PWM mode when (CLKSB:CLKSA not = 00), writes to TPMxCnVH:L registers	Update the TPMxCnVH:L registers with the value of their write buffer after both bytes were written and when the TPM counter changes from (TPMxMODH:L - 1) to (TPMxMODH:L). **Note:** If the TPM counter is a free-running counter, then this update is made when the TPM counter changes from $FFFE to $FFFF.	Update after both bytes are written and when the TPM counter changes from TPMxMODH:L to $0000.
In Center-Aligned PWM mode when (CLKSB:CLKSA not = 00), writes to TPMxCnVH:L registers[4]	Update the TPMxCnVH:L registers with the value of their write buffer after both bytes are written and when the TPM counter changes from (TPMxMODH:L - 1) to (TPMxMODH:L). **Note:** If the TPM counter is a free-running counter, then this update is made when the TPM counter changes from $FFFE to $FFFF.	Update after both bytes are written and when the TPM counter changes from TPMxMODH:L to (TPMxMODH:L - 1).
Center-Aligned PWM		
When TPMxCnVH:L = TPMxMODH:L[5]	Produces 100% duty cycle.	Produces 0% duty cycle.
When TPMxCnVH:L = (TPMxMODH:L - 1)[6]	Produces a near 100% duty cycle.	Produces 0% duty cycle.
TPMxCnVH:L is changed from 0x0000 to a non-zero value[7]	Waits for the start of a new PWM period to begin using the new duty cycle setting.	Changes the channel output at the middle of the current PWM period (when the count reaches 0x0000).
TPMxCnVH:L is changed from a non-zero value to 0x0000[8]	Finishes the current PWM period using the old duty cycle setting.	Finishes the current PWM period using the new duty cycle setting.
Write to TPMxMODH:L registers in BDM mode		
In BDM mode, a write to TPMxSC register	Clears the write coherency mechanism of TPMxMODH:L registers.	Does not clear the write coherency mechanism.

1 For more information, refer to Section 15.5.2, “TPM-Counter Registers (TPMxCNTH:TPMxCNTL).” [SE110-TPM case 7]
2 For more information, refer to Section 15.5.5, “TPM Channel Value Registers (TPMxCnVH:TPMxCnVL).”
3 For more information, refer to Section 15.6.2.1, “Input Capture Mode.”
4 For more information, refer to Section 15.6.2.4, “Center-Aligned PWM Mode.”
5 For more information, refer to Section 15.6.2.4, “Center-Aligned PWM Mode.” [SE110-TPM case 1]
6 For more information, refer to Section 15.6.2.4, “Center-Aligned PWM Mode.” [SE110-TPM case 2]
7 For more information, refer to Section 15.6.2.4, “Center-Aligned PWM Mode.” [SE110-TPM case 3 and 5]

[8] For more information, refer to Section 15.6.2.4, “Center-Aligned PWM Mode.” [SE110-TPM case 4]

15.3.1 Migrating from TPMV1

In addition to Section 15.3, “TPMV3 Differences from Previous Versions,” keep in mind the following considerations when migrating from a device that uses TPMV1.

- You can write to the Channel Value register (TPMxCnV) when the timer is not in input capture mode for TPMV2, not TPMV3.
- In edge- or center- aligned modes, the Channel Value register (TPMxCnV) registers only update when the timer changes from TPMMOD-1 to TPMMOD, or in the case of a free running timer from 0xFFFE to 0xFFFF.
- Also, when configuring the TPM modules, it is best to write to TPMxSC before TPMxCnV as a write to TPMxSC resets the coherency mechanism on the TPMxCnV registers.

Table 15-2. Migrating to TPMV3 Considerations

When...	Action / Best Practice
Writing to the Channel Value Register (TPMxCnV) register...	Timer must be in Input Capture mode.
Updating the Channel Value Register (TPMxCnV) register in edge-aligned or center-aligned modes...	Only occurs when the timer changes from TPMMOD-1 to TPMMOD (or in the case of a free running timer, from 0xFFFE to 0xFFFF).
Reseting the coherency mechanism for the Channel Value Register (TPMxCnV) register...	Write to TPMxSC.
Configuring the TPM modules...	Write first to TPMxSC and then to TPMxCnV register.

15.3.2 Features

The TPM includes these distinctive features:

- One to eight channels:
  - Each channel may be input capture, output compare, or edge-aligned PWM
  - Rising-Edge, falling-edge, or any-edge input capture trigger
  - Set, clear, or toggle output compare action
  - Selectable polarity on PWM outputs
- Module may be configured for buffered, center-aligned pulse-width-modulation (CPWM) on all channels
- Timer clock source selectable as prescaled bus clock, fixed system clock, or an external clock pin
  - Prescale taps for divide-by 1, 2, 4, 8, 16, 32, 64, or 128
  - Fixed system clock source are synchronized to the bus clock by an on-chip synchronization circuit
  - External clock pin may be shared with any timer channel pin or a separated input pin
- 16-bit free-running or modulo up/down count operation
- Timer system enable
- One interrupt per channel plus terminal count interrupt

15.3.3 Modes of Operation

In general, TPM channels may be independently configured to operate in input capture, output compare, or edge-aligned PWM modes. A control bit allows the whole TPM (all channels) to switch to center-aligned PWM mode. When center-aligned PWM mode is selected, input capture, output compare, and edge-aligned PWM functions are not available on any channels of this TPM module.

When the microcontroller is in active BDM background or BDM foreground mode, the TPM temporarily suspends all counting until the microcontroller returns to normal user operating mode. During stop mode, all system clocks, including the main oscillator, are stopped; therefore, the TPM is effectively disabled until clocks resume. During wait mode, the TPM continues to operate normally. Provided the TPM does not need to produce a real time reference or provide the interrupt source(s) needed to wake the MCU from wait mode, the user can save power by disabling TPM functions before entering wait mode.

- Input capture mode

  When a selected edge event occurs on the associated MCU pin, the current value of the 16-bit timer counter is captured into the channel value register and an interrupt flag bit is set. Rising edges, falling edges, any edge, or no edge (disable channel) may be selected as the active edge which triggers the input capture.
- Output compare mode

  When the value in the timer counter register matches the channel value register, an interrupt flag bit is set, and a selected output action is forced on the associated MCU pin. The output compare action may be selected to force the pin to zero, force the pin to one, toggle the pin, or ignore the pin (used for software timing functions).

- Edge-aligned PWM mode

  The value of a 16-bit modulo register plus 1 sets the period of the PWM output signal. The channel value register sets the duty cycle of the PWM output signal. The user may also choose the polarity of the PWM output signal. Interrupts are available at the end of the period and at the duty-cycle transition point. This type of PWM signal is called edge-aligned because the leading edges of all PWM signals are aligned with the beginning of the period, which is the same for all channels within a TPM.
- Center-aligned PWM mode

  Twice the value of a 16-bit modulo register sets the period of the PWM output, and the channel-value register sets the half-duty-cycle duration. The timer counter counts up until it reaches the modulo value and then counts down until it reaches zero. As the count matches the channel value register while counting down, the PWM output becomes active. When the count matches the channel value register while counting up, the PWM output becomes inactive. This type of PWM signal is called center-aligned because the centers of the active duty cycle periods for all channels are aligned with a count value of zero. This type of PWM is required for types of motors used in small appliances.

This is a high-level description only. Detailed descriptions of operating modes are in later sections.

15.3.4 Block Diagram

The TPM uses one input/output (I/O) pin per channel, TPMxCHn (timer channel n) where n is the channel number (1-8). The TPM shares its I/O pins with general purpose I/O port pins (refer to I/O pin descriptions in full-chip specification for the specific chip implementation).

Figure 15-2 shows the TPM structure. The central component of the TPM is the 16-bit counter that can operate as a free-running counter or a modulo up/down counter. The TPM counter (when operating in normal up-counting mode) provides the timing reference for the input capture, output compare, and edge-aligned PWM functions. The timer counter modulo registers, TPMxMODH:TPMxMODL, control the modulo value of the counter (the values 0x0000 or 0xFFFF effectively make the counter free running). Software can read the counter value at any time without affecting the counting sequence. Any write to either half of the TPMxCNT counter resets the counter, regardless of the data value written.

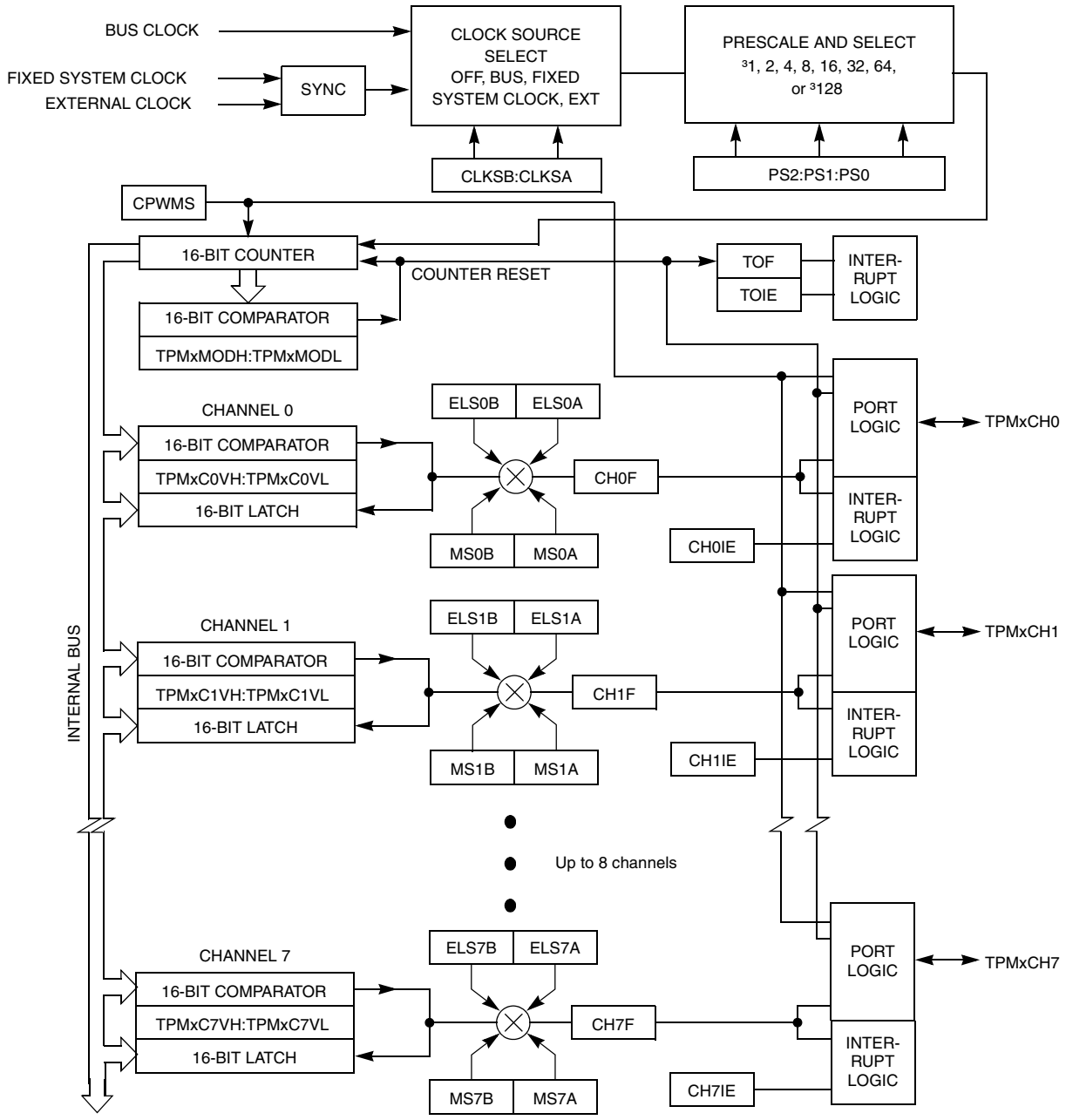

Figure 15-2. TPM Block Diagram

The TPM channels are programmable independently as input capture, output compare, or edge-aligned PWM channels. Alternately, the TPM can be configured to produce CPWM outputs on all channels. When the TPM is configured for CPWMs, the counter operates as an up/down counter; input capture, output compare, and EPWM functions are not practical.

If a channel is configured as input capture, an internal pullup device may be enabled for that channel. The details of how a module interacts with pin controls depends upon the chip implementation because the I/O pins and associated general purpose I/O controls are not part of the module. Refer to the discussion of the I/O port logic in a full-chip specification.

Because center-aligned PWMs are usually used to drive 3-phase AC-induction motors and brushless DC motors, they are typically used in sets of three or six channels.

15.4 Signal Description

Table 15-3 shows the user-accessible signals for the TPM. The number of channels may be varied from one to eight. When an external clock is included, it can be shared with the same pin as any TPM channel; however, it could be connected to a separate input pin. Refer to the I/O pin descriptions in full-chip specification for the specific chip implementation.

Table 15-3. Signal Properties

Name	Function
EXTCLK[1]	External clock source which may be selected to drive the TPM counter.
TPMxCHn[2]	I/O pin associated with TPM channel n

[1] When preset, this signal can share any channel pin; however depending upon full-chip implementation, this signal could be connected to a separate external pin.

[2] n=channel number (1 to 8)

Refer to documentation for the full-chip for details about reset states, port connections, and whether there is any pullup device on these pins.

TPM channel pins can be associated with general purpose I/O pins and have passive pullup devices which can be enabled with a control bit when the TPM or general purpose I/O controls have configured the associated pin as an input. When no TPM function is enabled to use a corresponding pin, the pin reverts to being controlled by general purpose I/O controls, including the port-data and data-direction registers. Immediately after reset, no TPM functions are enabled, so all associated pins revert to general purpose I/O control.

15.4.1 Detailed Signal Descriptions

This section describes each user-accessible pin signal in detail. Although Table 15-3 grouped all channel pins together, any TPM pin can be shared with the external clock source signal. Since I/O pin logic is not part of the TPM, refer to full-chip documentation for a specific derivative for more details about the interaction of TPM pin functions and general purpose I/O controls including port data, data direction, and pullup controls.

15.4.1.1 EXTCLK — External Clock Source

Control bits in the timer status and control register allow the user to select nothing (timer disable), the bus-rate clock (the normal default source), a crystal-related clock, or an external clock as the clock which drives the TPM prescaler and subsequently the 16-bit TPM counter. The external clock source is synchronized in the TPM. The bus clock clocks the synchronizer; the frequency of the external source must be no more than one-fourth the frequency of the bus-rate clock, to meet Nyquist criteria and allowing for jitter.

The external clock signal shares the same pin as a channel I/O pin, so the channel pin will not be usable for channel I/O function when selected as the external clock source. It is the user's responsibility to avoid such settings. If this pin is used as an external clock source (CLKSB:CLKSA = 1:1), the channel can still be used in output compare mode as a software timer (ELSnB:ELSnA = 0:0).

15.4.1.2 TPMxCHn — TPM Channel n I/O Pin(s)

Each TPM channel is associated with an I/O pin on the MCU. The function of this pin depends on the channel configuration. The TPM pins share with general purpose I/O pins, where each pin has a port data register bit, and a data direction control bit, and the port has optional passive pullups which may be enabled whenever a port pin is acting as an input.

The TPM channel does not control the I/O pin when (ELSnB:ELSnA = 0:0) or when (CLKSB:CLKSA = 0:0) so it normally reverts to general purpose I/O control. When CPWMS = 1 (and ELSnB:ELSnA ≠ 0:0), all channels within the TPM are configured for center-aligned PWM and the TPMxCHn pins are all controlled by the TPM system. When CPWMS=0, the MSnB:MSnA control bits determine whether the channel is configured for input capture, output compare, or edge-aligned PWM.

When a channel is configured for input capture (CPWMS=0, MSnB:MSnA = 0:0 and ELSnB:ELSnA not = 0:0), the TPMxCHn pin is forced to act as an edge-sensitive input to the TPM. ELSnB:ELSnA control bits determine what polarity edge or edges will trigger input-capture events. A synchronizer based on the bus clock is used to synchronize input edges to the bus clock. This implies the minimum pulse width—that can be reliably detected—on an input capture pin is four bus clock periods (with ideal clock pulses as near as two bus clocks can be detected). TPM uses this pin as an input capture input to override the port data and data direction controls for the same pin.

When a channel is configured for output compare (CPWMS=0, MSnB:MSnA = 0:1 and ELSnB:ELSnA not = 0:0), the associated data direction control is overridden, the TPMxCHn pin is considered an output controlled by the TPM, and the ELSnB:ELSnA control bits determine how the pin is controlled. The remaining three combinations of ELSnB:ELSnA determine whether the TPMxCHn pin is toggled, cleared, or set each time the 16-bit channel value register matches the timer counter.

When the output compare toggle mode is initially selected, the previous value on the pin is driven out until the next output compare event—then the pin is toggled.

When a channel is configured for edge-aligned PWM (CPWMS=0, MSnB=1 and ELSnB:ELSnA not = 0:0), the data direction is overridden, the TPMxCHn pin is forced to be an output controlled by the TPM, and ELSnA controls the polarity of the PWM output signal on the pin. When ELSnB:ELSnA=1:0, the TPMxCHn pin is forced high at the start of each new period (TPMxCNT=0x0000), and the pin is forced low when the channel value register matches the timer counter. When ELSnA=1, the TPMxCHn pin is forced low at the start of each new period (TPMxCNT=0x0000), and the pin is forced high when the channel value register matches the timer counter.

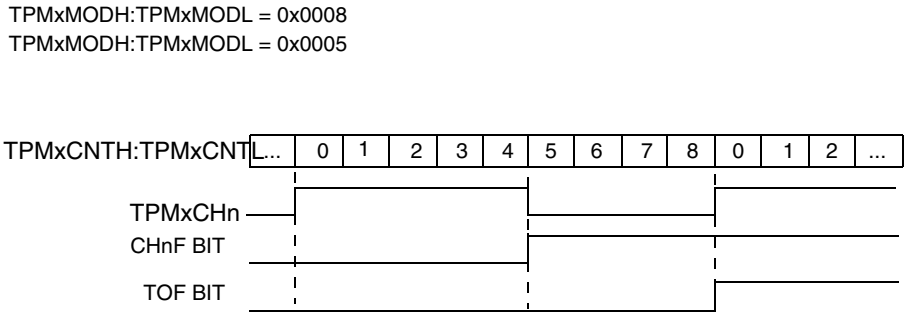

Figure 15-3. High-True Pulse of an Edge-Aligned PWM

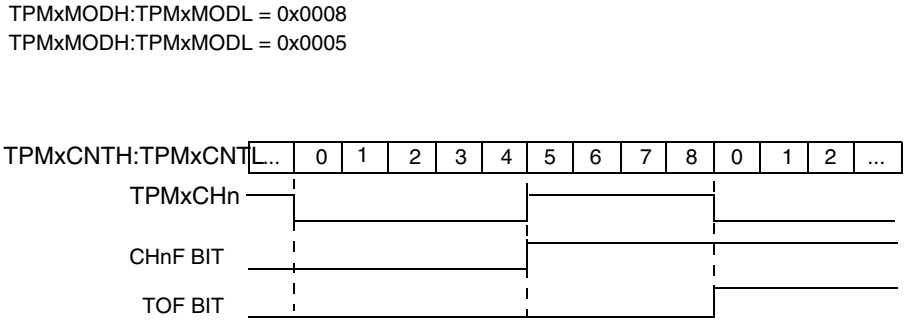

Figure 15-4. Low-True Pulse of an Edge-Aligned PWM

When the TPM is configured for center-aligned PWM (and ELSnB:ELSnA not = 0:0), the data direction for all channels in this TPM are overridden, the TPMxCHn pins are forced to be outputs controlled by the TPM, and the ELSnA bits control the polarity of each TPMxCHn output. If ELSnB:ELSnA=1:0, the corresponding TPMxCHn pin is cleared when the timer counter is counting up, and the channel value register matches the timer counter; the TPMxCHn pin is set when the timer counter is counting down, and the channel value register matches the timer counter. If ELSnA=1, the corresponding TPMxCHn pin is set when the timer counter is counting up and the channel value register matches the timer counter; the TPMxCHn pin is cleared when the timer counter is counting down and the channel value register matches the timer counter.

TPMxMODH:TPMxMODL = 0x0008
TPMxMODH:TPMxMODL = 0x0005

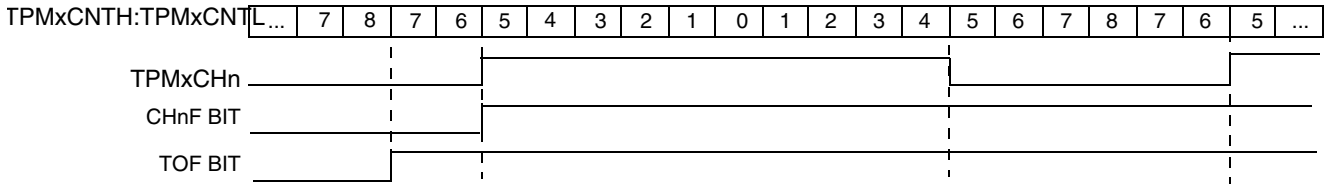

Figure 15-5. High-True Pulse of a Center-Aligned PWM

TPMxMODH:TPMxMODL = 0x0008
TPMxMODH:TPMxMODL = 0x0005

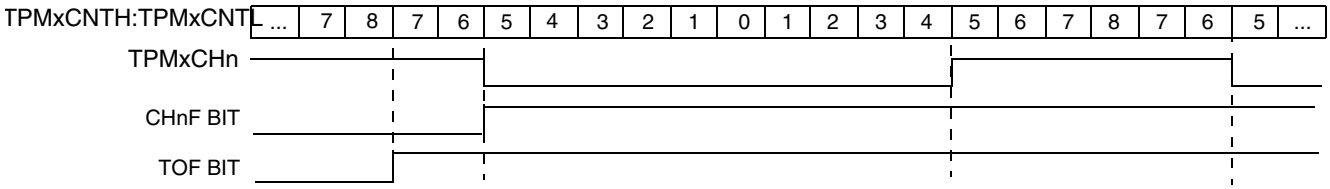

Figure 15-6. Low-True Pulse of a Center-Aligned PWM

15.5 Register Definition

This section consists of register descriptions in address order. A typical MCU system may contain multiple TPMs, and each TPM may have one to eight channels, so register names include placeholder characters to identify which TPM and which channel is being referenced. For example, TPMxCnSC refers to timer (TPM) x, channel n. TPM1C2SC would be the status and control register for channel 2 of timer 1.

15.5.1 TPM Status and Control Register (TPMxSC)

TPMxSC contains the overflow status flag and control bits used to configure the interrupt enable, TPM configuration, clock source, and prescale factor. These controls relate to all channels within this timer module.

	7	6	5	4	3	2	1	0
R	TOF	TOIE	CPWMS	CLKSB	CLKSA	PS2	PS1	PS0
W	0							
Reset	0	0	0	0	0	0	0	0

Figure 15-7. TPM Status and Control Register (TPMxSC)

Table 15-4. TPMxSC Field Descriptions

Field	Description
7 TOF	Timer overflow flag. This read/write flag is set when the TPM counter resets to 0x0000 after reaching the modulo value programmed in the TPM counter modulo registers. Clear TOF by reading the TPM status and control register when TOF is set and then writing a logic 0 to TOF. If another TPM overflow occurs before the clearing sequence is complete, the sequence is reset so TOF would remain set after the clear sequence was completed for the earlier TOF. This is done so a TOF interrupt request cannot be lost during the clearing sequence for a previous TOF. Reset clears TOF. Writing a logic 1 to TOF has no effect. 0 TPM counter has not reached modulo value or overflow 1 TPM counter has overflowed
6 TOIE	Timer overflow interrupt enable. This read/write bit enables TPM overflow interrupts. If TOIE is set, an interrupt is generated when TOF equals one. Reset clears TOIE. 0 TOF interrupts inhibited (use for software polling) 1 TOF interrupts enabled
5 CPWMS	Center-aligned PWM select. When present, this read/write bit selects CPWM operating mode. By default, the TPM operates in up-counting mode for input capture, output compare, and edge-aligned PWM functions. Setting CPWMS reconfigures the TPM to operate in up/down counting mode for CPWM functions. Reset clears CPWMS. 0 All channels operate as input capture, output compare, or edge-aligned PWM mode as selected by the MSnB:MSnA control bits in each channel's status and control register. 1 All channels operate in center-aligned PWM mode.

Table 15-4. TPMxSC Field Descriptions (continued)

Field	Description
4–3 CLKS[B:A]	Clock source selects. As shown in Table 15-5, this 2-bit field is used to disable the TPM system or select one of three clock sources to drive the counter prescaler. The fixed system clock source is only meaningful in systems with a PLL-based or FLL-based system clock. When there is no PLL or FLL, the fixed-system clock source is the same as the bus rate clock. The external source is synchronized to the bus clock by TPM module, and the fixed system clock source (when a PLL or FLL is present) is synchronized to the bus clock by an on-chip synchronization circuit. When a PLL or FLL is present but not enabled, the fixed-system clock source is the same as the bus-rate clock.
2–0 PS[2:0]	Prescale factor select. This 3-bit field selects one of 8 division factors for the TPM clock input as shown in Table 15-6. This prescaler is located after any clock source synchronization or clock source selection so it affects the clock source selected to drive the TPM system. The new prescale factor will affect the clock source on the next system clock cycle after the new value is updated into the register bits.

Table 15-5. TPM-Clock-Source Selection

CLKSB:CLKSA	TPM Clock Source to Prescaler Input
00	No clock selected (TPM counter disable)
01	Bus rate clock
10	Fixed system clock
11	External source

Table 15-6. Prescale Factor Selection

PS2:PS1:PS0	TPM Clock Source Divided-by
000	1
001	2
010	4
011	8
100	16
101	32
110	64
111	128

15.5.2 TPM-Counter Registers (TPMxCNTH:TPMxCNTL)

The two read-only TPM counter registers contain the high and low bytes of the value in the TPM counter. Reading either byte (TPMxCNTH or TPMxCNTL) latches the contents of both bytes into a buffer where they remain latched until the other half is read. This allows coherent 16-bit reads in either big-endian or little-endian order which makes this more friendly to various compiler implementations. The coherency mechanism is automatically restarted by an MCU reset or any write to the timer status/control register (TPMxSC).

Reset clears the TPM counter registers. Writing any value to TPMxCNTH or TPMxCNTL also clears the TPM counter (TPMxCNTH:TPMxCNTL) and resets the coherency mechanism, regardless of the data involved in the write.

	7	6	5	4	3	2	1	0
R	Bit 15	14	13	12	11	10	9	Bit 8
W	Any write to TPMxCNTH clears the 16-bit counter							
Reset	0	0	0	0	0	0	0	0

Figure 15-8. TPM Counter Register High (TPMxCNTH)

	7	6	5	4	3	2	1	0
R	Bit 7	6	5	4	3	2	1	Bit 0
W	Any write to TPMxCNTL clears the 16-bit counter							
Reset	0	0	0	0	0	0	0	0

Figure 15-9. TPM Counter Register Low (TPMxCNTL)

When BDM is active, the timer counter is frozen (this is the value that will be read by user); the coherency mechanism is frozen such that the buffer latches remain in the state they were in when the BDM became active, even if one or both counter halves are read while BDM is active. This assures that if the user was in the middle of reading a 16-bit register when BDM became active, it will read the appropriate value from the other half of the 16-bit value after returning to normal execution.

In BDM mode, writing any value to TPMxSC, TPMxCNTH or TPMxCNTL registers resets the read coherency mechanism of the TPMxCNTH:L registers, regardless of the data involved in the write.

15.5.3 TPM Counter Modulo Registers (TPMxMODH:TPMxMODL)

The read/write TPM modulo registers contain the modulo value for the TPM counter. After the TPM counter reaches the modulo value, the TPM counter resumes counting from 0x0000 at the next clock, and the overflow flag (TOF) becomes set. Writing to TPMxMODH or TPMxMODL inhibits the TOF bit and overflow interrupts until the other byte is written. Reset sets the TPM counter modulo registers to 0x0000 which results in a free running timer counter (modulo disabled).

Writing to either byte (TPMxMODH or TPMxMODL) latches the value into a buffer and the registers are updated with the value of their write buffer according to the value of CLKSB:CLKSA bits, so:

- If (CLKSB:CLKSA = 0:0), then the registers are updated when the second byte is written
- If (CLKSB:CLKSA not = 0:0), then the registers are updated after both bytes were written, and the TPM counter changes from (TPMxMODH:TPMxMODL - 1) to (TPMxMODH:TPMxMODL). If the TPM counter is a free-running counter, the update is made when the TPM counter changes from 0xFFFE to 0xFFFF

The latching mechanism may be manually reset by writing to the TPMxSC address (whether BDM is active or not).

When BDM is active, the coherency mechanism is frozen (unless reset by writing to TPMxSC register) such that the buffer latches remain in the state they were in when the BDM became active, even if one or both halves of the modulo register are written while BDM is active. Any write to the modulo registers bypasses the buffer latches and directly writes to the modulo register while BDM is active.

	7	6	5	4	3	2	1	0
R W	Bit 15	14	13	12	11	10	9	Bit 8
Reset	0	0	0	0	0	0	0	0

Figure 15-10. TPM Counter Modulo Register High (TPMxMODH)

	7	6	5	4	3	2	1	0
R W	Bit 7	6	5	4	3	2	1	Bit 0
Reset	0	0	0	0	0	0	0	0

Figure 15-11. TPM Counter Modulo Register Low (TPMxMODL)

Reset the TPM counter before writing to the TPM modulo registers to avoid confusion about when the first counter overflow will occur.

15.5.4 TPM Channel n Status and Control Register (TPMxCnSC)

TPMxCnSC contains the channel-interrupt-status flag and control bits used to configure the interrupt enable, channel configuration, and pin function.

	7	6	5	4	3	2	1	0
R	CHnF	CHnIE	MSnB	MSnA	ELSnB	ELSnA	0	0
W	0							
Reset	0	0	0	0	0	0	0	0

= Unimplemented or Reserved

Figure 15-12. TPM Channel n Status and Control Register (TPMxCnSC)

Table 15-7. TPMxCnSC Field Descriptions

Field	Description
7 CHnF	Channel n flag. When channel n is an input-capture channel, this read/write bit is set when an active edge occurs on the channel n pin. When channel n is an output compare or edge-aligned/center-aligned PWM channel, CHnF is set when the value in the TPM counter registers matches the value in the TPM channel n value registers. When channel n is an edge-aligned/center-aligned PWM channel and the duty cycle is set to 0% or 100%, CHnF will not be set even when the value in the TPM counter registers matches the value in the TPM channel n value registers. A corresponding interrupt is requested when CHnF is set and interrupts are enabled (CHnIE = 1). Clear CHnF by reading TPMxCnSC while CHnF is set and then writing a logic 0 to CHnF. If another interrupt request occurs before the clearing sequence is complete, the sequence is reset so CHnF remains set after the clear sequence completed for the earlier CHnF. This is done so a CHnF interrupt request cannot be lost due to clearing a previous CHnF. Reset clears the CHnF bit. Writing a logic 1 to CHnF has no effect. 0 No input capture or output compare event occurred on channel n 1 Input capture or output compare event on channel n
6 CHnIE	Channel n interrupt enable. This read/write bit enables interrupts from channel n. Reset clears CHnIE. 0 Channel n interrupt requests disabled (use for software polling) 1 Channel n interrupt requests enabled
5 MSnB	Mode select B for TPM channel n. When CPWMS=0, MSnB=1 configures TPM channel n for edge-aligned PWM mode. Refer to the summary of channel mode and setup controls in Table 15-8.
4 MSnA	Mode select A for TPM channel n. When CPWMS=0 and MSnB=0, MSnA configures TPM channel n for input-capture mode or output compare mode. Refer to Table 15-8 for a summary of channel mode and setup controls. **Note:** If the associated port pin is not stable for at least two bus clock cycles before changing to input capture mode, it is possible to get an unexpected indication of an edge trigger.
3–2 ELSnB ELSnA	Edge/level select bits. Depending upon the operating mode for the timer channel as set by CPWMS:MSnB:MSnA and shown in Table 15-8, these bits select the polarity of the input edge that triggers an input capture event, select the level that will be driven in response to an output compare match, or select the polarity of the PWM output. Setting ELSnB:ELSnA to 0:0 configures the related timer pin as a general purpose I/O pin not related to any timer functions. This function is typically used to temporarily disable an input capture channel or to make the timer pin available as a general purpose I/O pin when the associated timer channel is set up as a software timer that does not require the use of a pin.

Table 15-8. Mode, Edge, and Level Selection

CPWMS	MSnB:MSnA	ELSnB:ELSnA	Mode	Configuration
X	XX	00	Pin is not controlled by TPM. It is reverted to general purpose I/O or other peripheral control	
0	00	01	Input capture	Capture on rising edge only
		10		Capture on falling edge only
		11		Capture on rising or falling edge
	01	00	Output compare	Software compare only
		01		Toggle output on channel match
		10		Clear output on channel match
		11		Set output on channel match
	1X	10	Edge-aligned PWM	High-true pulses (clear output on channel match)
		X1		Low-true pulses (set output on channel match)

Table 15-8. Mode, Edge, and Level Selection (continued)

CPWMS	MSnB:MSnA	ELSnB:ELSnA	Mode	Configuration
X	XX	00	Pin is not controlled by TPM. It is reverted to general purpose I/O or other peripheral control	
1	XX	10	Center-aligned PWM	High-true pulses (clear output on channel match when TPM counter is counting up)
		X1		Low-true pulses (set output on channel match when TPM counter is counting up)

15.5.5 TPM Channel Value Registers (TPMxCnVH:TPMxCnVL)

These read/write registers contain the captured TPM counter value of the input capture function or the output compare value for the output compare or PWM functions. The channel registers are cleared by reset.

	7	6	5	4	3	2	1	0
R W	Bit 15	14	13	12	11	10	9	Bit 8
Reset	0	0	0	0	0	0	0	0

Figure 15-13. TPM Channel Value Register High (TPMxCnVH)

	7	6	5	4	3	2	1	0
R W	Bit 7	6	5	4	3	2	1	Bit 0
Reset	0	0	0	0	0	0	0	0

Figure 15-14. TPM Channel Value Register Low (TPMxCnVL)

In input capture mode, reading either byte (TPMxCnVH or TPMxCnVL) latches the contents of both bytes into a buffer where they remain latched until the other half is read. This latching mechanism also resets (becomes unlatched) when the TPMxCnSC register is written (whether BDM mode is active or not). Any write to the channel registers will be ignored during the input capture mode.

When BDM is active, the coherency mechanism is frozen (unless reset by writing to TPMxCnSC register) such that the buffer latches remain in the state they were in when the BDM became active, even if one or both halves of the channel register are read while BDM is active. This assures that if the user was in the middle of reading a 16-bit register when BDM became active, it will read the appropriate value from the other half of the 16-bit value after returning to normal execution. The value read from the TPMxCnVH and TPMxCnVL registers in BDM mode is the value of these registers and not the value of their read buffer.

In output compare or PWM modes, writing to either byte (TPMxCnVH or TPMxCnVL) latches the value into a buffer. After both bytes are written, they are transferred as a coherent 16-bit value into the timer-channel registers according to the value of CLKSB:CLKSA bits and the selected mode, so:

- If (CLKSB:CLKSA = 0:0), then the registers are updated when the second byte is written.
- If (CLKSB:CLKSA not = 0:0 and in output compare mode) then the registers are updated after the second byte is written and on the next change of the TPM counter (end of the prescaler counting).
- If (CLKSB:CLKSA not = 0:0 and in EPWM or CPWM modes), then the registers are updated after the both bytes were written, and the TPM counter changes from (TPMxMODH:TPMxMODL - 1) to (TPMxMODH:TPMxMODL). If the TPM counter is a free-running counter then the update is made when the TPM counter changes from 0xFFFE to 0xFFFF.

The latching mechanism may be manually reset by writing to the TPMxCnSC register (whether BDM mode is active or not). This latching mechanism allows coherent 16-bit writes in either big-endian or little-endian order which is friendly to various compiler implementations.

When BDM is active, the coherency mechanism is frozen such that the buffer latches remain in the state they were in when the BDM became active even if one or both halves of the channel register are written while BDM is active. Any write to the channel registers bypasses the buffer latches and directly write to the channel register while BDM is active. The values written to the channel register while BDM is active are used for PWM & output compare operation once normal execution resumes. Writes to the channel registers while BDM is active do not interfere with partial completion of a coherency sequence. After the coherency mechanism has been fully exercised, the channel registers are updated using the buffered values written (while BDM was not active) by the user.

15.6 Functional Description

All TPM functions are associated with a central 16-bit counter which allows flexible selection of the clock source and prescale factor. There is also a 16-bit modulo register associated with the main counter.

The CPWMS control bit chooses between center-aligned PWM operation for all channels in the TPM (CPWMS=1) or general purpose timing functions (CPWMS=0) where each channel can independently be configured to operate in input capture, output compare, or edge-aligned PWM mode. The CPWMS control bit is located in the main TPM status and control register because it affects all channels within the TPM and influences the way the main counter operates. (In CPWM mode, the counter changes to an up/down mode rather than the up-counting mode used for general purpose timer functions.)

The following sections describe the main counter and each of the timer operating modes (input capture, output compare, edge-aligned PWM, and center-aligned PWM). Because details of pin operation and interrupt activity depend upon the operating mode, these topics will be covered in the associated mode explanation sections.

15.6.1 Counter

All timer functions are based on the main 16-bit counter (TPMxCNTH:TPMxCNTL). This section discusses selection of the clock source, end-of-count overflow, up-counting vs. up/down counting, and manual counter reset.

15.6.1.1 Counter Clock Source

The 2-bit field, CLKSB:CLKSA, in the timer status and control register (TPMxSC) selects one of three possible clock sources or OFF (which effectively disables the TPM). See Table 15-5. After any MCU reset, CLKSB:CLKSA=0:0 so no clock source is selected, and the TPM is in a very low power state. These control bits may be read or written at any time and disabling the timer (writing 00 to the CLKSB:CLKSA field) does not affect the values in the counter or other timer registers.

Table 15-9. TPM Clock Source Selection

CLKSB:CLKSA	TPM Clock Source to Prescaler Input
00	No clock selected (TPM counter disabled)
01	Bus rate clock
10	Fixed system clock
11	External source

The bus rate clock is the main system bus clock for the MCU. This clock source requires no synchronization because it is the clock that is used for all internal MCU activities including operation of the CPU and buses.

In MCUs that have no PLL and FLL or the PLL and FLL are not engaged, the fixed system clock source is the same as the bus-rate-clock source, and it does not go through a synchronizer. When a PLL or FLL is present and engaged, a synchronizer is required between the crystal divided-by two clock source and the timer counter so counter transitions will be properly aligned to bus-clock transitions. A synchronizer will be used at chip level to synchronize the crystal-related source clock to the bus clock.

The external clock source may be connected to any TPM channel pin. This clock source always has to pass through a synchronizer to assure that counter transitions are properly aligned to bus clock transitions. The bus-rate clock drives the synchronizer; therefore, to meet Nyquist criteria even with jitter, the frequency of the external clock source must not be faster than the bus rate divided-by four. With ideal clocks the external clock can be as fast as bus clock divided by four.

When the external clock source shares the TPM channel pin, this pin should not be used for other channel timing functions. For example, it would be ambiguous to configure channel 0 for input capture when the TPM channel 0 pin was also being used as the timer external clock source. (It is the user's responsibility to avoid such settings.) The TPM channel could still be used in output compare mode for software timing functions (pin controls set not to affect the TPM channel pin).

15.6.1.2 Counter Overflow and Modulo Reset

An interrupt flag and enable are associated with the 16-bit main counter. The flag (TOF) is a software-accessible indication that the timer counter has overflowed. The enable signal selects between software polling (TOIE=0) where no hardware interrupt is generated, or interrupt-driven operation (TOIE=1) where a static hardware interrupt is generated whenever the TOF flag is equal to one.

The conditions causing TOF to become set depend on whether the TPM is configured for center-aligned PWM (CPWMS=1). In the simplest mode, there is no modulus limit and the TPM is not in CPWMS=1 mode. In this case, the 16-bit timer counter counts from 0x0000 through 0xFFFF and overflows to 0x0000 on the next counting clock. TOF becomes set at the transition from 0xFFFF to 0x0000. When a modulus limit is set, TOF becomes set at the transition from the value set in the modulus register to 0x0000. When the TPM is in center-aligned PWM mode (CPWMS=1), the TOF flag gets set as the counter changes direction at the end of the count value set in the modulus register (that is, at the transition from the value set in the modulus register to the next lower count value). This corresponds to the end of a PWM period (the 0x0000 count value corresponds to the center of a period).

15.6.1.3 Counting Modes

The main timer counter has two counting modes. When center-aligned PWM is selected (CPWMS=1), the counter operates in up/down counting mode. Otherwise, the counter operates as a simple up counter. As an up counter, the timer counter counts from 0x0000 through its terminal count and then continues with 0x0000. The terminal count is 0xFFFF or a modulus value in TPMxMODH:TPMxMODL.

When center-aligned PWM operation is specified, the counter counts up from 0x0000 through its terminal count and then down to 0x0000 where it changes back to up counting. Both 0x0000 and the terminal count value are normal length counts (one timer clock period long). In this mode, the timer overflow flag (TOF) becomes set at the end of the terminal-count period (as the count changes to the next lower count value).

15.6.1.4 Manual Counter Reset

The main timer counter can be manually reset at any time by writing any value to either half of TPMxCNTH or TPMxCNTL. Resetting the counter in this manner also resets the coherency mechanism in case only half of the counter was read before resetting the count.

15.6.2 Channel Mode Selection

Provided CPWMS=0, the MSnB and MSnA control bits in the channel n status and control registers determine the basic mode of operation for the corresponding channel. Choices include input capture, output compare, and edge-aligned PWM.

15.6.2.1 Input Capture Mode

With the input-capture function, the TPM can capture the time at which an external event occurs. When an active edge occurs on the pin of an input-capture channel, the TPM latches the contents of the TPM counter into the channel-value registers (TPMxCnVH:TPMxCnVL). Rising edges, falling edges, or any edge may be chosen as the active edge that triggers an input capture.

In input capture mode, the TPMxCnVH and TPMxCnVL registers are read only.

When either half of the 16-bit capture register is read, the other half is latched into a buffer to support coherent 16-bit accesses in big-endian or little-endian order. The coherency sequence can be manually reset by writing to the channel status/control register (TPMxCnSC).

An input capture event sets a flag bit (CHnF) which may optionally generate a CPU interrupt request.

While in BDM, the input capture function works as configured by the user. When an external event occurs, the TPM latches the contents of the TPM counter (which is frozen because of the BDM mode) into the channel value registers and sets the flag bit.

15.6.2.2 Output Compare Mode

With the output-compare function, the TPM can generate timed pulses with programmable position, polarity, duration, and frequency. When the counter reaches the value in the channel-value registers of an output-compare channel, the TPM can set, clear, or toggle the channel pin.

In output compare mode, values are transferred to the corresponding timer channel registers only after both 8-bit halves of a 16-bit register have been written and according to the value of CLKSB:CLKSA bits, so:

- If (CLKSB:CLKSA = 0:0), the registers are updated when the second byte is written
- If (CLKSB:CLKSA not = 0:0), the registers are updated at the next change of the TPM counter (end of the prescaler counting) after the second byte is written.

The coherency sequence can be manually reset by writing to the channel status/control register (TPMxCnSC).

An output compare event sets a flag bit (CHnF) which may optionally generate a CPU-interrupt request.

15.6.2.3 Edge-Aligned PWM Mode

This type of PWM output uses the normal up-counting mode of the timer counter (CPWMS=0) and can be used when other channels in the same TPM are configured for input capture or output compare functions. The period of this PWM signal is determined by the value of the modulus register (TPMxMODH:TPMxMODL) plus 1. The duty cycle is determined by the setting in the timer channel register (TPMxCnVH:TPMxCnVL). The polarity of this PWM signal is determined by the setting in the ELSnA control bit. 0% and 100% duty cycle cases are possible.

The output compare value in the TPM channel registers determines the pulse width (duty cycle) of the PWM signal (Figure 15-15). The time between the modulus overflow and the output compare is the pulse width. If ELSnA=0, the counter overflow forces the PWM signal high, and the output compare forces the PWM signal low. If ELSnA=1, the counter overflow forces the PWM signal low, and the output compare forces the PWM signal high.

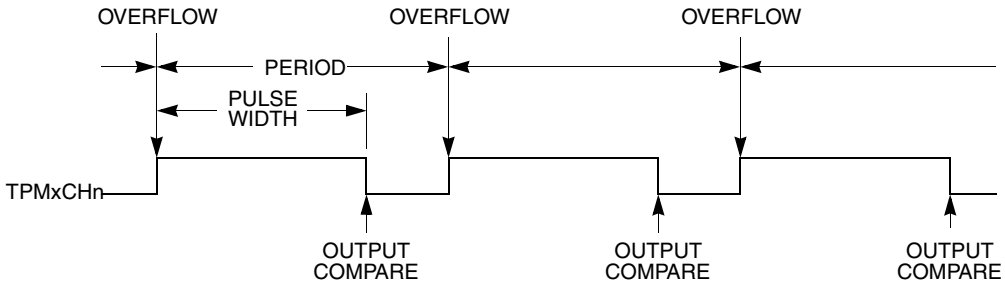

Figure 15-15. PWM Period and Pulse Width (ELSnA=0)

When the channel value register is set to 0x0000, the duty cycle is 0%. 100% duty cycle can be achieved by setting the timer-channel register (TPMxCnVH:TPMxCnVL) to a value greater than the modulus setting. This implies that the modulus setting must be less than 0xFFFF in order to get 100% duty cycle.

Because the TPM may be used in an 8-bit MCU, the settings in the timer channel registers are buffered to ensure coherent 16-bit updates and to avoid unexpected PWM pulse widths. Writes to any of the registers TPMxCnVH and TPMxCnVL, actually write to buffer registers. In edge-aligned PWM mode, values are transferred to the corresponding timer-channel registers according to the value of CLKSB:CLKSA bits, so:

- If (CLKSB:CLKSA = 0:0), the registers are updated when the second byte is written
- If (CLKSB:CLKSA not = 0:0), the registers are updated after the both bytes were written, and the TPM counter changes from (TPMxMODH:TPMxMODL - 1) to (TPMxMODH:TPMxMODL). If

the TPM counter is a free-running counter then the update is made when the TPM counter changes from 0xFFFE to 0xFFFF.

15.6.2.4 Center-Aligned PWM Mode

This type of PWM output uses the up/down counting mode of the timer counter (CPWMS=1). The output compare value in TPMxCnVH:TPMxCnVL determines the pulse width (duty cycle) of the PWM signal while the period is determined by the value in TPMxMODH:TPMxMODL. TPMxMODH:TPMxMODL should be kept in the range of 0x0001 to 0x7FFF because values outside this range can produce ambiguous results. ELSnA will determine the polarity of the CPWM output.

pulse width = 2 x (TPMxCnVH:TPMxCnVL)

period = 2 x (TPMxMODH:TPMxMODL); TPMxMODH:TPMxMODL=0x0001-0x7FFF

If the channel-value register TPMxCnVH:TPMxCnVL is zero or negative (bit 15 set), the duty cycle will be 0%. If TPMxCnVH:TPMxCnVL is a positive value (bit 15 clear) and is greater than the (non-zero) modulus setting, the duty cycle will be 100% because the duty cycle compare will never occur. This implies the usable range of periods set by the modulus register is 0x0001 through 0x7FFE (0x7FFF if you do not need to generate 100% duty cycle). This is not a significant limitation. The resulting period would be much longer than required for normal applications.

TPMxMODH:TPMxMODL=0x0000 is a special case that should not be used with center-aligned PWM mode. When CPWMS=0, this case corresponds to the counter running free from 0x0000 through 0xFFFF, but when CPWMS=1 the counter needs a valid match to the modulus register somewhere other than at 0x0000 in order to change directions from up-counting to down-counting.

The output compare value in the TPM channel registers (times 2) determines the pulse width (duty cycle) of the CPWM signal (Figure 15-16). If ELSnA=0, a compare occurred while counting up forces the CPWM output signal low and a compare occurred while counting down forces the output high. The counter counts up until it reaches the modulo setting in TPMxMODH:TPMxMODL, then counts down until it reaches zero. This sets the period equal to two times TPMxMODH:TPMxMODL.

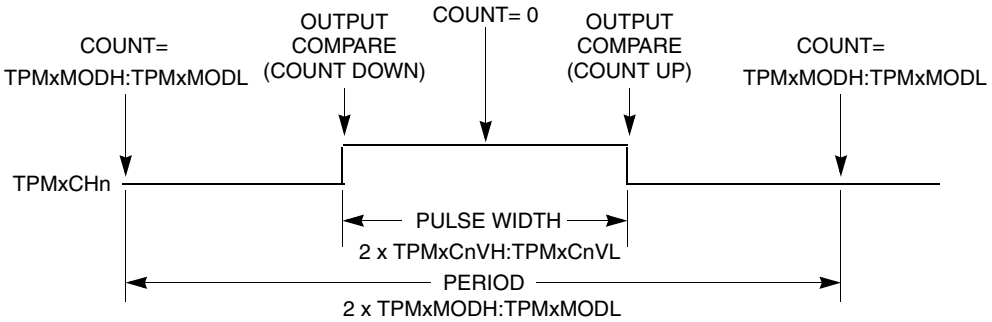

Figure 15-16. CPWM Period and Pulse Width (ELSnA=0)

Center-aligned PWM outputs typically produce less noise than edge-aligned PWMs because fewer I/O pin transitions are lined up at the same system clock edge. This type of PWM is also required for some types of motor drives.

Input capture, output compare, and edge-aligned PWM functions do not make sense when the counter is operating in up/down counting mode so this implies that all active channels within a TPM must be used in CPWM mode when CPWMS=1.

The TPM may be used in an 8-bit MCU. The settings in the timer channel registers are buffered to ensure coherent 16-bit updates and to avoid unexpected PWM pulse widths. Writes to any of the registers TPMxMODH, TPMxMODL, TPMxCnVH, and TPMxCnVL, actually write to buffer registers.

In center-aligned PWM mode, the TPMxCnVH:L registers are updated with the value of their write buffer according to the value of CLKSB:CLKSA bits, so:

- If (CLKSB:CLKSA = 0:0), the registers are updated when the second byte is written
- If (CLKSB:CLKSA not = 0:0), the registers are updated after the both bytes were written, and the TPM counter changes from (TPMxMODH:TPMxMODL - 1) to (TPMxMODH:TPMxMODL). If the TPM counter is a free-running counter, the update is made when the TPM counter changes from 0xFFFE to 0xFFFF.

When TPMxCNTH:TPMxCNTL=TPMxMODH:TPMxMODL, the TPM can optionally generate a TOF interrupt (at the end of this count).

Writing to TPMxSC cancels any values written to TPMxMODH and/or TPMxMODL and resets the coherency mechanism for the modulo registers. Writing to TPMxCnSC cancels any values written to the channel value registers and resets the coherency mechanism for TPMxCnVH:TPMxCnVL.

15.7 Reset Overview

15.7.1 General

The TPM is reset whenever any MCU reset occurs.

15.7.2 Description of Reset Operation

Reset clears the TPMxSC register which disables clocks to the TPM and disables timer overflow interrupts (TOIE=0). CPWMS, MSnB, MSnA, ELSnB, and ELSnA are all cleared which configures all TPM channels for input-capture operation with the associated pins disconnected from I/O pin logic (so all MCU pins related to the TPM revert to general purpose I/O pins).

15.8 Interrupts

15.8.1 General

The TPM generates an optional interrupt for the main counter overflow and an interrupt for each channel. The meaning of channel interrupts depends on each channel's mode of operation. If the channel is configured for input capture, the interrupt flag is set each time the selected input capture edge is recognized. If the channel is configured for output compare or PWM modes, the interrupt flag is set each time the main timer counter matches the value in the 16-bit channel value register.

All TPM interrupts are listed in Table 15-10 which shows the interrupt name, the name of any local enable that can block the interrupt request from leaving the TPM and getting recognized by the separate interrupt processing logic.

Table 15-10. Interrupt Summary

Interrupt	Local Enable	Source	Description
TOF	TOIE	Counter overflow	Set each time the timer counter reaches its terminal count (at transition to next count value which is usually 0x0000)
CHnF	CHnIE	Channel event	An input capture or output compare event took place on channel n

The TPM module will provide a high-true interrupt signal. Vectors and priorities are determined at chip integration time in the interrupt module so refer to the user's guide for the interrupt module or to the chip's complete documentation for details.

15.8.2 Description of Interrupt Operation

For each interrupt source in the TPM, a flag bit is set upon recognition of the interrupt condition such as timer overflow, channel-input capture, or output-compare events. This flag may be read (polled) by software to determine that the action has occurred, or an associated enable bit (TOIE or CHnIE) can be set to enable hardware interrupt generation. While the interrupt enable bit is set, a static interrupt will generate whenever the associated interrupt flag equals one. The user's software must perform a sequence of steps to clear the interrupt flag before returning from the interrupt-service routine.

TPM interrupt flags are cleared by a two-step process including a read of the flag bit while it is set (1) followed by a write of zero (0) to the bit. If a new event is detected between these two steps, the sequence is reset and the interrupt flag remains set after the second step to avoid the possibility of missing the new event.

15.8.2.1 Timer Overflow Interrupt (TOF) Description

The meaning and details of operation for TOF interrupts varies slightly depending upon the mode of operation of the TPM system (general purpose timing functions versus center-aligned PWM operation). The flag is cleared by the two step sequence described above.

15.8.2.1.1 Normal Case

Normally TOF is set when the timer counter changes from 0xFFFF to 0x0000. When the TPM is not configured for center-aligned PWM (CPWMS=0), TOF gets set when the timer counter changes from the terminal count (the value in the modulo register) to 0x0000. This case corresponds to the normal meaning of counter overflow.

15.8.2.1.2 Center-Aligned PWM Case

When CPWMS=1, TOF gets set when the timer counter changes direction from up-counting to down-counting at the end of the terminal count (the value in the modulo register). In this case the TOF corresponds to the end of a PWM period.

15.8.2.2 Channel Event Interrupt Description

The meaning of channel interrupts depends on the channel's current mode (input-capture, output-compare, edge-aligned PWM, or center-aligned PWM).

15.8.2.2.1 Input Capture Events

When a channel is configured as an input capture channel, the ELSnB:ELSnA control bits select no edge (off), rising edges, falling edges or any edge as the edge which triggers an input capture event. When the selected edge is detected, the interrupt flag is set. The flag is cleared by the two-step sequence described in Section 15.8.2, "Description of Interrupt Operation."

15.8.2.2.2 Output Compare Events

When a channel is configured as an output compare channel, the interrupt flag is set each time the main timer counter matches the 16-bit value in the channel value register. The flag is cleared by the two-step sequence described Section 15.8.2, "Description of Interrupt Operation."

15.8.2.2.3 PWM End-of-Duty-Cycle Events

For channels configured for PWM operation there are two possibilities. When the channel is configured for edge-aligned PWM, the channel flag gets set when the timer counter matches the channel value register which marks the end of the active duty cycle period. When the channel is configured for center-aligned PWM, the timer count matches the channel value register twice during each PWM cycle. In this CPWM case, the channel flag is set at the start and at the end of the active duty cycle period which are the times when the timer counter matches the channel value register. The flag is cleared by the two-step sequence described Section 15.8.2, "Description of Interrupt Operation."

15.9 The Differences from TPM v2 to TPM v3

1. Write to TPMxCnTH:L registers (Section 15.5.2, "TPM-Counter Registers (TPMxCNTH:TPMxCNTL)) [SE110-TPM case 7]

   Any write to TPMxCNTH or TPMxCNTL registers in TPM v3 clears the TPM counter (TPMxCNTH:L) and the prescaler counter. Instead, in the TPM v2 only the TPM counter is cleared in this case.

2. Read of TPMxCNTH:L registers (Section 15.5.2, "TPM-Counter Registers (TPMxCNTH:TPMxCNTL))

   — In TPM v3, any read of TPMxCNTH:L registers during BDM mode returns the value of the TPM counter that is frozen. In TPM v2, if only one byte of the TPMxCNTH:L registers was read before the BDM mode became active, then any read of TPMxCNTH:L registers during

BDM mode returns the latched value of TPMxCNTH:L from the read buffer instead of the frozen TPM counter value.

— This read coherency mechanism is cleared in TPM v3 in BDM mode if there is a write to TPMxSC, TPMxCNTH or TPMxCNTL. Instead, in these conditions the TPM v2 does not clear this read coherency mechanism.

3. Read of TPMxCnVH:L registers (Section 15.5.5, “TPM Channel Value Registers (TPMxCnVH:TPMxCnVL))
   — In TPM v3, any read of TPMxCnVH:L registers during BDM mode returns the value of the TPMxCnVH:L register. In TPM v2, if only one byte of the TPMxCnVH:L registers was read before the BDM mode became active, then any read of TPMxCnVH:L registers during BDM mode returns the latched value of TPMxCNTH:L from the read buffer instead of the value in the TPMxCnVH:L registers.
   — This read coherency mechanism is cleared in TPM v3 in BDM mode if there is a write to TPMxCnSC. Instead, in this condition the TPM v2 does not clear this read coherency mechanism.
4. Write to TPMxCnVH:L registers
   — Input Capture Mode (Section 15.6.2.1, “Input Capture Mode)

     In this mode the TPM v3 does not allow the writes to TPMxCnVH:L registers. Instead, the TPM v2 allows these writes.
   — Output Compare Mode (Section 15.6.2.2, “Output Compare Mode)

     In this mode and if (CLKSB:CLKSA not = 0:0), the TPM v3 updates the TPMxCnVH:L registers with the value of their write buffer at the next change of the TPM counter (end of the prescaler counting) after the second byte is written. Instead, the TPM v2 always updates these registers when their second byte is written.
   — Edge-Aligned PWM (Section 15.6.2.3, “Edge-Aligned PWM Mode)

     In this mode and if (CLKSB:CLKSA not = 00), the TPM v3 updates the TPMxCnVH:L registers with the value of their write buffer after that the both bytes were written and when the TPM counter changes from (TPMxMODH:L - 1) to (TPMxMODH:L). If the TPM counter is a free-running counter, then this update is made when the TPM counter changes from $FFFE to $FFFF. Instead, the TPM v2 makes this update after that the both bytes were written and when the TPM counter changes from TPMxMODH:L to $0000.
   — Center-Aligned PWM (Section 15.6.2.4, “Center-Aligned PWM Mode)

     In this mode and if (CLKSB:CLKSA not = 00), the TPM v3 updates the TPMxCnVH:L registers with the value of their write buffer after that the both bytes were written and when the TPM counter changes from (TPMxMODH:L - 1) to (TPMxMODH:L). If the TPM counter is a free-running counter, then this update is made when the TPM counter changes from $FFFE to $FFFF. Instead, the TPM v2 makes this update after that the both bytes were written and when the TPM counter changes from TPMxMODH:L to (TPMxMODH:L - 1).
5. Center-Aligned PWM (Section 15.6.2.4, “Center-Aligned PWM Mode)
   — TPMxCnVH:L = TPMxMODH:L [SE110-TPM case 1]

     In this case, the TPM v3 produces 100% duty cycle. Instead, the TPM v2 produces 0% duty cycle.

— TPMxCnVH:L = (TPMxMODH:L - 1) [SE110-TPM case 2]

In this case, the TPM v3 produces almost 100% duty cycle. Instead, the TPM v2 produces 0% duty cycle.

— TPMxCnVH:L is changed from 0x0000 to a non-zero value [SE110-TPM case 3 and 5]

In this case, the TPM v3 waits for the start of a new PWM period to begin using the new duty cycle setting. Instead, the TPM v2 changes the channel output at the middle of the current PWM period (when the count reaches 0x0000).

— TPMxCnVH:L is changed from a non-zero value to 0x0000 [SE110-TPM case 4]

In this case, the TPM v3 finishes the current PWM period using the old duty cycle setting. Instead, the TPM v2 finishes the current PWM period using the new duty cycle setting.

6. Write to TPMxMODH:L registers in BDM mode (Section 15.5.3, “TPM Counter Modulo Registers (TPMxMODH:TPMxMODL))

   In the TPM v3 a write to TPMxSC register in BDM mode clears the write coherency mechanism of TPMxMODH:L registers. Instead, in the TPM v2 this coherency mechanism is not cleared when there is a write to TPMxSC register.

Chapter 16
Development Support

16.1 Introduction

Development support systems in the HCS08 include the background debug controller (BDC) and the on-chip debug module (DBG). The BDC provides a single-wire debug interface to the target MCU that provides a convenient interface for programming the on-chip FLASH and other nonvolatile memories. The BDC is also the primary debug interface for development and allows non-intrusive access to memory data and traditional debug features such as CPU register modify, breakpoints, and single instruction trace commands.

In the HCS08 Family, address and data bus signals are not available on external pins (not even in test modes). Debug is done through commands fed into the target MCU via the single-wire background debug interface. The debug module provides a means to selectively trigger and capture bus information so an external development system can reconstruct what happened inside the MCU on a cycle-by-cycle basis without having external access to the address and data signals.

The alternate BDC clock source for MC9S08AC60 Series is the ICGLCLK. See Chapter 10, “Internal Clock Generator (S08ICGV4)” for more information about ICGCLK and how to select clock sources.

16.1.1 Features

Features of the BDC module include:

- Single pin for mode selection and background communications
- BDC registers are not located in the memory map
- SYNC command to determine target communications rate
- Non-intrusive commands for memory access
- Active background mode commands for CPU register access
- GO and TRACE1 commands
- BACKGROUND command can wake CPU from stop or wait modes
- One hardware address breakpoint built into BDC
- Oscillator runs in stop mode, if BDC enabled
- COP watchdog disabled while in active background mode

Features of the ICE system include:

- Two trigger comparators: Two address + read/write (R/W) or one full address + data + R/W
- Flexible 8-word by 16-bit FIFO (first-in, first-out) buffer for capture information:
  - Change-of-flow addresses or
  - Event-only data
- Two types of breakpoints:
  - Tag breakpoints for instruction opcodes
  - Force breakpoints for any address access
- Nine trigger modes:
  - Basic: A-only, A OR B
  - Sequence: A then B
  - Full: A AND B data, A AND NOT B data
  - Event (store data): Event-only B, A then event-only B
  - Range: Inside range (A ≤ address ≤ B), outside range (address < A or address > B)

16.2 Background Debug Controller (BDC)

All MCUs in the HCS08 Family contain a single-wire background debug interface that supports in-circuit programming of on-chip nonvolatile memory and sophisticated non-intrusive debug capabilities. Unlike debug interfaces on earlier 8-bit MCUs, this system does not interfere with normal application resources. It does not use any user memory or locations in the memory map and does not share any on-chip peripherals.

BDC commands are divided into two groups:

- Active background mode commands require that the target MCU is in active background mode (the user program is not running). Active background mode commands allow the CPU registers to be read or written, and allow the user to trace one user instruction at a time, or GO to the user program from active background mode.

- Non-intrusive commands can be executed at any time even while the user's program is running. Non-intrusive commands allow a user to read or write MCU memory locations or access status and control registers within the background debug controller.

Typically, a relatively simple interface pod is used to translate commands from a host computer into commands for the custom serial interface to the single-wire background debug system. Depending on the development tool vendor, this interface pod may use a standard RS-232 serial port, a parallel printer port, or some other type of communications such as a universal serial bus (USB) to communicate between the host PC and the pod. The pod typically connects to the target system with ground, the BKGD pin, $\overline{\text{RESET}}$, and sometimes V_{DD}. An open-drain connection to reset allows the host to force a target system reset, which is useful to regain control of a lost target system or to control startup of a target system before the on-chip nonvolatile memory has been programmed. Sometimes V_{DD} can be used to allow the pod to use power from the target system to avoid the need for a separate power supply. However, if the pod is powered separately, it can be connected to a running target system without forcing a target system reset or otherwise disturbing the running application program.

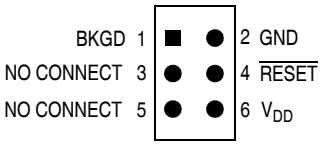

Figure 16-1. BDM Tool Connector

16.2.1 BKGD Pin Description

BKGD is the single-wire background debug interface pin. The primary function of this pin is for bidirectional serial communication of active background mode commands and data. During reset, this pin is used to select between starting in active background mode or starting the user's application program. This pin is also used to request a timed sync response pulse to allow a host development tool to determine the correct clock frequency for background debug serial communications.

BDC serial communications use a custom serial protocol first introduced on the M68HC12 Family of microcontrollers. This protocol assumes the host knows the communication clock rate that is determined by the target BDC clock rate. All communication is initiated and controlled by the host that drives a high-to-low edge to signal the beginning of each bit time. Commands and data are sent most significant bit first (MSB first). For a detailed description of the communications protocol, refer to Section 16.2.2, "Communication Details."

If a host is attempting to communicate with a target MCU that has an unknown BDC clock rate, a SYNC command may be sent to the target MCU to request a timed sync response signal from which the host can determine the correct communication speed.

BKGD is a pseudo-open-drain pin and there is an on-chip pullup so no external pullup resistor is required. Unlike typical open-drain pins, the external RC time constant on this pin, which is influenced by external capacitance, plays almost no role in signal rise time. The custom protocol provides for brief, actively driven speedup pulses to force rapid rise times on this pin without risking harmful drive level conflicts. Refer to Section 16.2.2, "Communication Details," for more detail.

When no debugger pod is connected to the 6-pin BDM interface connector, the internal pullup on BKGD chooses normal operating mode. When a debug pod is connected to BKGD it is possible to force the MCU into active background mode after reset. The specific conditions for forcing active background depend upon the HCS08 derivative (refer to the introduction to this Development Support section). It is not necessary to reset the target MCU to communicate with it through the background debug interface.

16.2.2 Communication Details

The BDC serial interface requires the external controller to generate a falling edge on the BKGD pin to indicate the start of each bit time. The external controller provides this falling edge whether data is transmitted or received.

BKGD is a pseudo-open-drain pin that can be driven either by an external controller or by the MCU. Data is transferred MSB first at 16 BDC clock cycles per bit (nominal speed). The interface times out if 512 BDC clock cycles occur between falling edges from the host. Any BDC command that was in progress when this timeout occurs is aborted without affecting the memory or operating mode of the target MCU system.

The custom serial protocol requires the debug pod to know the target BDC communication clock speed.

The clock switch (CLKSW) control bit in the BDC status and control register allows the user to select the BDC clock source. The BDC clock source can either be the bus or the alternate BDC clock source.

The BKGD pin can receive a high or low level or transmit a high or low level. The following diagrams show timing for each of these cases. Interface timing is synchronous to clocks in the target BDC, but asynchronous to the external host. The internal BDC clock signal is shown for reference in counting cycles.

Figure 16-2 shows an external host transmitting a logic 1 or 0 to the BKGD pin of a target HCS08 MCU. The host is asynchronous to the target so there is a 0-to-1 cycle delay from the host-generated falling edge to where the target perceives the beginning of the bit time. Ten target BDC clock cycles later, the target senses the bit level on the BKGD pin. Typically, the host actively drives the pseudo-open-drain BKGD pin during host-to-target transmissions to speed up rising edges. Because the target does not drive the BKGD pin during the host-to-target transmission period, there is no need to treat the line as an open-drain signal during this period.

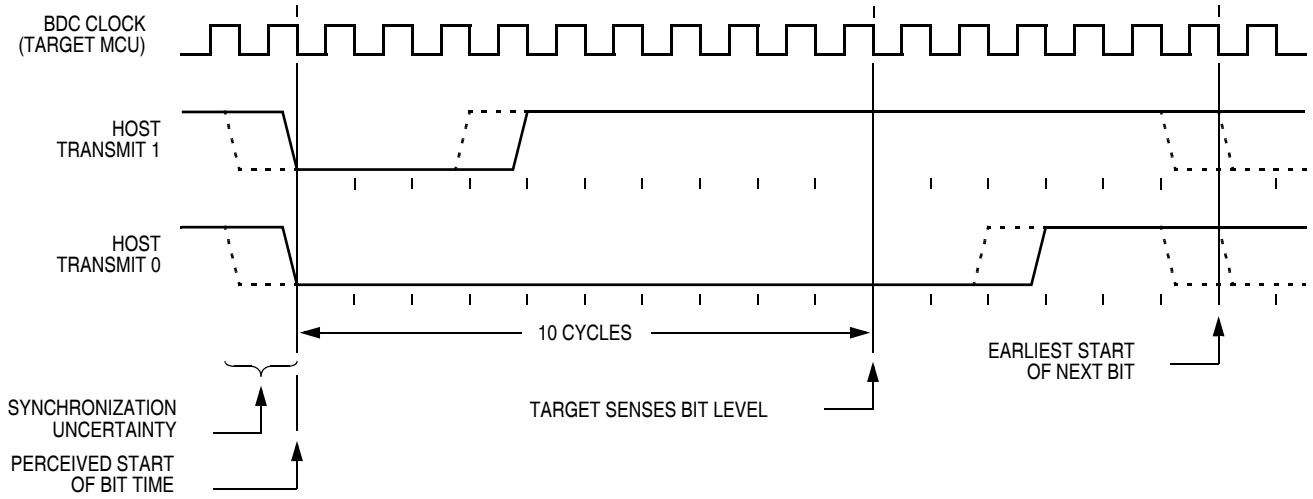

Figure 16-2. BDC Host-to-Target Serial Bit Timing

Figure 16-3 shows the host receiving a logic 1 from the target HCS08 MCU. Because the host is asynchronous to the target MCU, there is a 0-to-1 cycle delay from the host-generated falling edge on BKGD to the perceived start of the bit time in the target MCU. The host holds the BKGD pin low long enough for the target to recognize it (at least two target BDC cycles). The host must release the low drive before the target MCU drives a brief active-high speedup pulse seven cycles after the perceived start of the bit time. The host should sample the bit level about 10 cycles after it started the bit time.

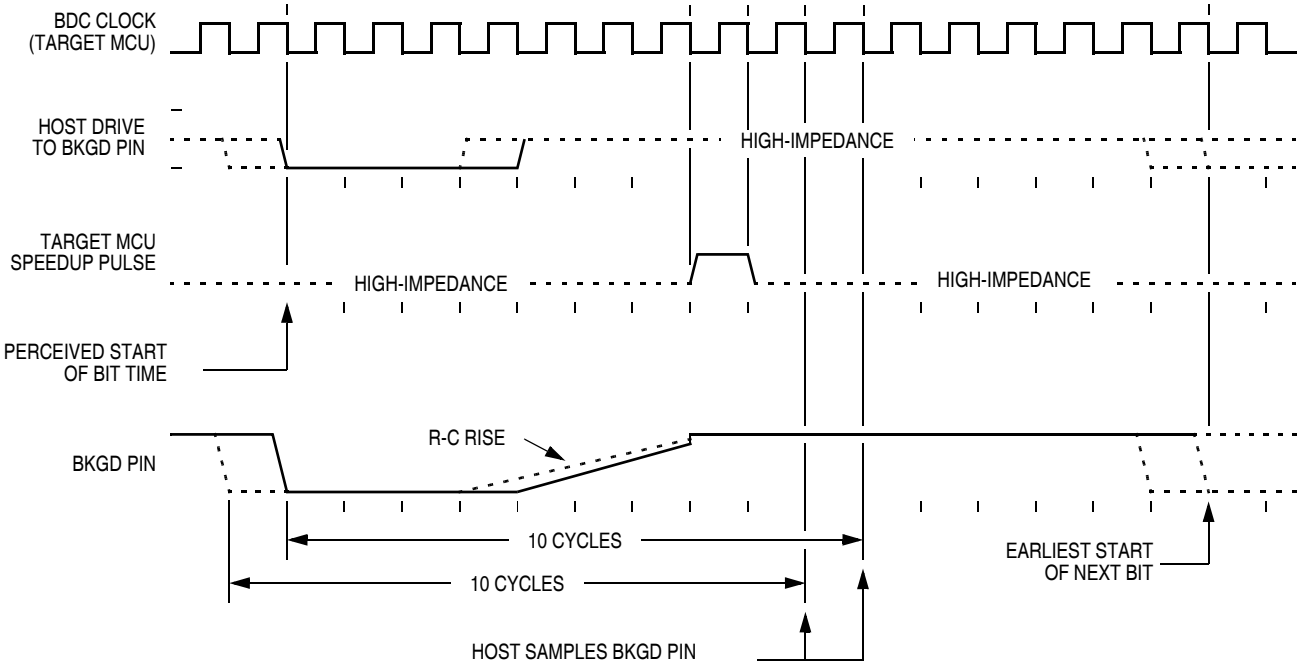

Figure 16-3. BDC Target-to-Host Serial Bit Timing (Logic 1)

Figure 16-4 shows the host receiving a logic 0 from the target HCS08 MCU. Because the host is asynchronous to the target MCU, there is a 0-to-1 cycle delay from the host-generated falling edge on BKGD to the start of the bit time as perceived by the target MCU. The host initiates the bit time but the target HCS08 finishes it. Because the target wants the host to receive a logic 0, it drives the BKGD pin low for 13 BDC clock cycles, then briefly drives it high to speed up the rising edge. The host samples the bit level about 10 cycles after starting the bit time.

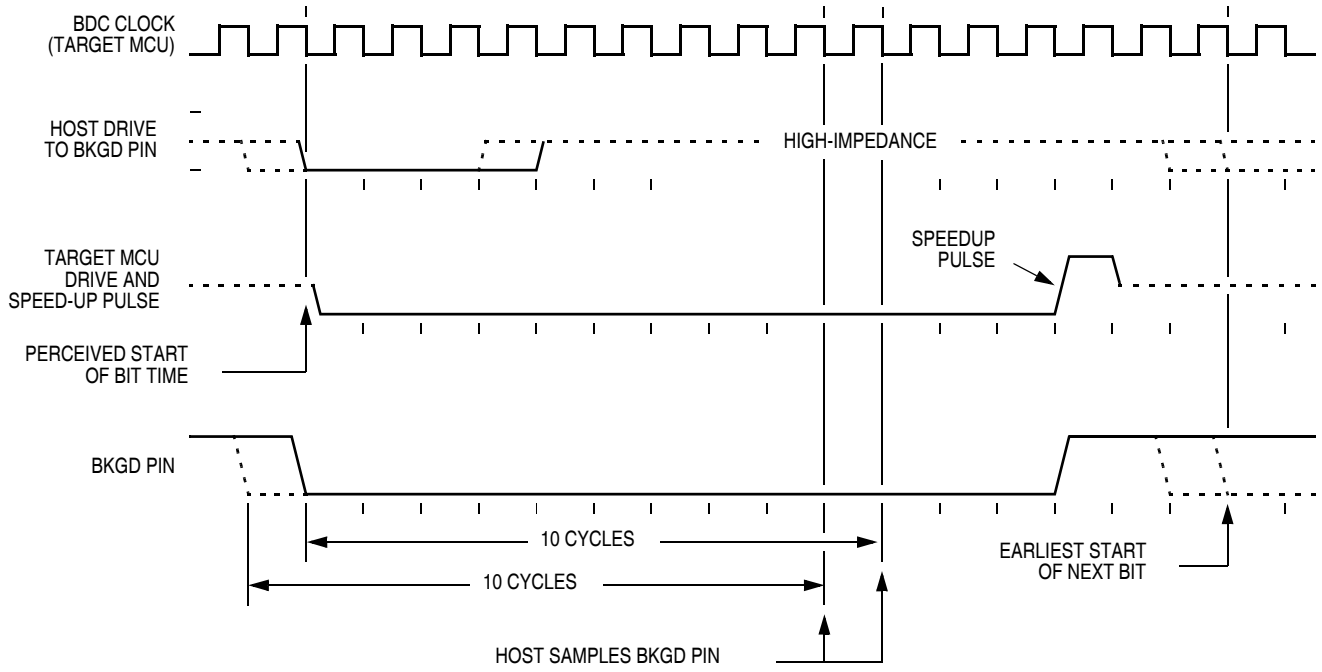

Figure 16-4. BDM Target-to-Host Serial Bit Timing (Logic 0)

16.2.3 BDC Commands

BDC commands are sent serially from a host computer to the BKGD pin of the target HCS08 MCU. All commands and data are sent MSB-first using a custom BDC communications protocol. Active background mode commands require that the target MCU is currently in the active background mode while non-intrusive commands may be issued at any time whether the target MCU is in active background mode or running a user application program.

Table 16-1 shows all HCS08 BDC commands, a shorthand description of their coding structure, and the meaning of each command.

Coding Structure Nomenclature

This nomenclature is used in Table 16-1 to describe the coding structure of the BDC commands.

		Commands begin with an 8-bit hexadecimal command code in the host-to-target direction (most significant bit first)
/	=	separates parts of the command
d	=	delay 16 target BDC clock cycles
AAAA	=	a 16-bit address in the host-to-target direction
RD	=	8 bits of read data in the target-to-host direction
WD	=	8 bits of write data in the host-to-target direction
RD16	=	16 bits of read data in the target-to-host direction
WD16	=	16 bits of write data in the host-to-target direction
SS	=	the contents of BDCSCR in the target-to-host direction (STATUS)
CC	=	8 bits of write data for BDCSCR in the host-to-target direction (CONTROL)
RBKP	=	16 bits of read data in the target-to-host direction (from BDCBKPT breakpoint register)
WBKP	=	16 bits of write data in the host-to-target direction (for BDCBKPT breakpoint register)

Table 16-1. BDC Command Summary

Command Mnemonic	Active BDM/ Non-intrusive	Coding Structure	Description
SYNC	Non-intrusive	n/a[1]	Request a timed reference pulse to determine target BDC communication speed
ACK_ENABLE	Non-intrusive	D5/d	Enable acknowledge protocol. Refer to document order no. HCS08RMv1/D.
ACK_DISABLE	Non-intrusive	D6/d	Disable acknowledge protocol. Refer to document order no. HCS08RMv1/D.
BACKGROUND	Non-intrusive	90/d	Enter active background mode if enabled (ignore if ENBDM bit equals 0)
READ_STATUS	Non-intrusive	E4/SS	Read BDC status from BDCSCR
WRITE_CONTROL	Non-intrusive	C4/CC	Write BDC controls in BDCSCR
READ_BYTE	Non-intrusive	E0/AAAA/d/RD	Read a byte from target memory
READ_BYTE_WS	Non-intrusive	E1/AAAA/d/SS/RD	Read a byte and report status
READ_LAST	Non-intrusive	E8/SS/RD	Re-read byte from address just read and report status
WRITE_BYTE	Non-intrusive	C0/AAAA/WD/d	Write a byte to target memory
WRITE_BYTE_WS	Non-intrusive	C1/AAAA/WD/d/SS	Write a byte and report status
READ_BKPT	Non-intrusive	E2/RBKP	Read BDCBKPT breakpoint register
WRITE_BKPT	Non-intrusive	C2/WBKP	Write BDCBKPT breakpoint register
GO	Active BDM	08/d	Go to execute the user application program starting at the address currently in the PC
TRACE1	Active BDM	10/d	Trace 1 user instruction at the address in the PC, then return to active background mode
TAGGO	Active BDM	18/d	Same as GO but enable external tagging (HCS08 devices have no external tagging pin)
READ_A	Active BDM	68/d/RD	Read accumulator (A)
READ_CCR	Active BDM	69/d/RD	Read condition code register (CCR)
READ_PC	Active BDM	6B/d/RD16	Read program counter (PC)
READ_HX	Active BDM	6C/d/RD16	Read H and X register pair (H:X)
READ_SP	Active BDM	6F/d/RD16	Read stack pointer (SP)
READ_NEXT	Active BDM	70/d/RD	Increment H:X by one then read memory byte located at H:X
READ_NEXT_WS	Active BDM	71/d/SS/RD	Increment H:X by one then read memory byte located at H:X. Report status and data.
WRITE_A	Active BDM	48/WD/d	Write accumulator (A)
WRITE_CCR	Active BDM	49/WD/d	Write condition code register (CCR)
WRITE_PC	Active BDM	4B/WD16/d	Write program counter (PC)
WRITE_HX	Active BDM	4C/WD16/d	Write H and X register pair (H:X)
WRITE_SP	Active BDM	4F/WD16/d	Write stack pointer (SP)
WRITE_NEXT	Active BDM	50/WD/d	Increment H:X by one, then write memory byte located at H:X
WRITE_NEXT_WS	Active BDM	51/WD/d/SS	Increment H:X by one, then write memory byte located at H:X. Also report status.

[1] The SYNC command is a special operation that does not have a command code.

The SYNC command is unlike other BDC commands because the host does not necessarily know the correct communications speed to use for BDC communications until after it has analyzed the response to the SYNC command.

To issue a SYNC command, the host:

- Drives the BKGD pin low for at least 128 cycles of the slowest possible BDC clock (The slowest clock is normally the reference oscillator/64 or the self-clocked rate/64.)
- Drives BKGD high for a brief speedup pulse to get a fast rise time (This speedup pulse is typically one cycle of the fastest clock in the system.)
- Removes all drive to the BKGD pin so it reverts to high impedance
- Monitors the BKGD pin for the sync response pulse

The target, upon detecting the SYNC request from the host (which is a much longer low time than would ever occur during normal BDC communications):

- Waits for BKGD to return to a logic high
- Delays 16 cycles to allow the host to stop driving the high speedup pulse
- Drives BKGD low for 128 BDC clock cycles
- Drives a 1-cycle high speedup pulse to force a fast rise time on BKGD
- Removes all drive to the BKGD pin so it reverts to high impedance

The host measures the low time of this 128-cycle sync response pulse and determines the correct speed for subsequent BDC communications. Typically, the host can determine the correct communication speed within a few percent of the actual target speed and the communication protocol can easily tolerate speed errors of several percent.

16.2.4 BDC Hardware Breakpoint

The BDC includes one relatively simple hardware breakpoint that compares the CPU address bus to a 16-bit match value in the BDCBKPT register. This breakpoint can generate a forced breakpoint or a tagged breakpoint. A forced breakpoint causes the CPU to enter active background mode at the first instruction boundary following any access to the breakpoint address. The tagged breakpoint causes the instruction opcode at the breakpoint address to be tagged so that the CPU will enter active background mode rather than executing that instruction if and when it reaches the end of the instruction queue. This implies that tagged breakpoints can only be placed at the address of an instruction opcode while forced breakpoints can be set at any address.

The breakpoint enable (BKPTEN) control bit in the BDC status and control register (BDCSCR) is used to enable the breakpoint logic (BKPTEN = 1). When BKPTEN = 0, its default value after reset, the breakpoint logic is disabled and no BDC breakpoints are requested regardless of the values in other BDC breakpoint registers and control bits. The force/tag select (FTS) control bit in BDCSCR is used to select forced (FTS = 1) or tagged (FTS = 0) type breakpoints.

The on-chip debug module (DBG) includes circuitry for two additional hardware breakpoints that are more flexible than the simple breakpoint in the BDC module.

16.3 On-Chip Debug System (DBG)

Because HCS08 devices do not have external address and data buses, the most important functions of an in-circuit emulator have been built onto the chip with the MCU. The debug system consists of an 8-stage FIFO that can store address or data bus information, and a flexible trigger system to decide when to capture bus information and what information to capture. The system relies on the single-wire background debug system to access debug control registers and to read results out of the eight stage FIFO.

The debug module includes control and status registers that are accessible in the user's memory map. These registers are located in the high register space to avoid using valuable direct page memory space.

Most of the debug module's functions are used during development, and user programs rarely access any of the control and status registers for the debug module. The one exception is that the debug system can provide the means to implement a form of ROM patching. This topic is discussed in greater detail in Section 16.3.6, "Hardware Breakpoints."

16.3.1 Comparators A and B

Two 16-bit comparators (A and B) can optionally be qualified with the R/W signal and an opcode tracking circuit. Separate control bits allow you to ignore R/W for each comparator. The opcode tracking circuitry optionally allows you to specify that a trigger will occur only if the opcode at the specified address is actually executed as opposed to only being read from memory into the instruction queue. The comparators are also capable of magnitude comparisons to support the inside range and outside range trigger modes. Comparators are disabled temporarily during all BDC accesses.

The A comparator is always associated with the 16-bit CPU address. The B comparator compares to the CPU address or the 8-bit CPU data bus, depending on the trigger mode selected. Because the CPU data bus is separated into a read data bus and a write data bus, the RWAEN and RWA control bits have an additional purpose, in full address plus data comparisons they are used to decide which of these buses to use in the comparator B data bus comparisons. If RWAEN = 1 (enabled) and RWA = 0 (write), the CPU's write data bus is used. Otherwise, the CPU's read data bus is used.

The currently selected trigger mode determines what the debugger logic does when a comparator detects a qualified match condition. A match can cause:

- Generation of a breakpoint to the CPU
- Storage of data bus values into the FIFO
- Starting to store change-of-flow addresses into the FIFO (begin type trace)
- Stopping the storage of change-of-flow addresses into the FIFO (end type trace)

16.3.2 Bus Capture Information and FIFO Operation

The usual way to use the FIFO is to setup the trigger mode and other control options, then arm the debugger. When the FIFO has filled or the debugger has stopped storing data into the FIFO, you would read the information out of it in the order it was stored into the FIFO. Status bits indicate the number of words of valid information that are in the FIFO as data is stored into it. If a trace run is manually halted by writing 0 to ARM before the FIFO is full (CNT = 1:0:0:0), the information is shifted by one position and

the host must perform ((8 – CNT) – 1) dummy reads of the FIFO to advance it to the first significant entry in the FIFO.

In most trigger modes, the information stored in the FIFO consists of 16-bit change-of-flow addresses. In these cases, read DBGFH then DBGFL to get one coherent word of information out of the FIFO. Reading DBGFL (the low-order byte of the FIFO data port) causes the FIFO to shift so the next word of information is available at the FIFO data port. In the event-only trigger modes (see Section 16.3.5, "Trigger Modes"), 8-bit data information is stored into the FIFO. In these cases, the high-order half of the FIFO (DBGFH) is not used and data is read out of the FIFO by simply reading DBGFL. Each time DBGFL is read, the FIFO is shifted so the next data value is available through the FIFO data port at DBGFL.

In trigger modes where the FIFO is storing change-of-flow addresses, there is a delay between CPU addresses and the input side of the FIFO. Because of this delay, if the trigger event itself is a change-of-flow address or a change-of-flow address appears during the next two bus cycles after a trigger event starts the FIFO, it will not be saved into the FIFO. In the case of an end-trace, if the trigger event is a change-of-flow, it will be saved as the last change-of-flow entry for that debug run.

The FIFO can also be used to generate a profile of executed instruction addresses when the debugger is not armed. When ARM = 0, reading DBGFL causes the address of the most-recently fetched opcode to be saved in the FIFO. To use the profiling feature, a host debugger would read addresses out of the FIFO by reading DBGFH then DBGFL at regular periodic intervals. The first eight values would be discarded because they correspond to the eight DBGFL reads needed to initially fill the FIFO. Additional periodic reads of DBGFH and DBGFL return delayed information about executed instructions so the host debugger can develop a profile of executed instruction addresses.

16.3.3 Change-of-Flow Information

To minimize the amount of information stored in the FIFO, only information related to instructions that cause a change to the normal sequential execution of instructions is stored. With knowledge of the source and object code program stored in the target system, an external debugger system can reconstruct the path of execution through many instructions from the change-of-flow information stored in the FIFO.

For conditional branch instructions where the branch is taken (branch condition was true), the source address is stored (the address of the conditional branch opcode). Because BRA and BRN instructions are not conditional, these events do not cause change-of-flow information to be stored in the FIFO.

Indirect JMP and JSR instructions use the current contents of the H:X index register pair to determine the destination address, so the debug system stores the run-time destination address for any indirect JMP or JSR. For interrupts, RTI, or RTS, the destination address is stored in the FIFO as change-of-flow information.

16.3.4 Tag vs. Force Breakpoints and Triggers

Tagging is a term that refers to identifying an instruction opcode as it is fetched into the instruction queue, but not taking any other action until and unless that instruction is actually executed by the CPU. This distinction is important because any change-of-flow from a jump, branch, subroutine call, or interrupt causes some instructions that have been fetched into the instruction queue to be thrown away without being executed.

A force-type breakpoint waits for the current instruction to finish and then acts upon the breakpoint request. The usual action in response to a breakpoint is to go to active background mode rather than continuing to the next instruction in the user application program.

The tag vs. force terminology is used in two contexts within the debug module. The first context refers to breakpoint requests from the debug module to the CPU. The second refers to match signals from the comparators to the debugger control logic. When a tag-type break request is sent to the CPU, a signal is entered into the instruction queue along with the opcode so that if/when this opcode ever executes, the CPU will effectively replace the tagged opcode with a BGND opcode so the CPU goes to active background mode rather than executing the tagged instruction. When the TRGSEL control bit in the DBGT register is set to select tag-type operation, the output from comparator A or B is qualified by a block of logic in the debug module that tracks opcodes and only produces a trigger to the debugger if the opcode at the compare address is actually executed. There is separate opcode tracking logic for each comparator so more than one compare event can be tracked through the instruction queue at a time.

16.3.5 Trigger Modes

The trigger mode controls the overall behavior of a debug run. The 4-bit TRG field in the DBGT register selects one of nine trigger modes. When TRGSEL = 1 in the DBGT register, the output of the comparator must propagate through an opcode tracking circuit before triggering FIFO actions. The BEGIN bit in DBGT chooses whether the FIFO begins storing data when the qualified trigger is detected (begin trace), or the FIFO stores data in a circular fashion from the time it is armed until the qualified trigger is detected (end trigger).

A debug run is started by writing a 1 to the ARM bit in the DBGC register, which sets the ARMF flag and clears the AF and BF flags and the CNT bits in DBGS. A begin-trace debug run ends when the FIFO gets full. An end-trace run ends when the selected trigger event occurs. Any debug run can be stopped manually by writing a 0 to ARM or DBGEN in DBGC.

In all trigger modes except event-only modes, the FIFO stores change-of-flow addresses. In event-only trigger modes, the FIFO stores data in the low-order eight bits of the FIFO.

The BEGIN control bit is ignored in event-only trigger modes and all such debug runs are begin type traces. When TRGSEL = 1 to select opcode fetch triggers, it is not necessary to use R/W in comparisons because opcode tags would only apply to opcode fetches that are always read cycles. It would also be unusual to specify TRGSEL = 1 while using a full mode trigger because the opcode value is normally known at a particular address.

The following trigger mode descriptions only state the primary comparator conditions that lead to a trigger. Either comparator can usually be further qualified with R/W by setting RWAEN (RWBEN) and the corresponding RWA (RWB) value to be matched against R/W. The signal from the comparator with optional R/W qualification is used to request a CPU breakpoint if BRKEN = 1 and TAG determines whether the CPU request will be a tag request or a force request.

A-Only — Trigger when the address matches the value in comparator A

A OR B — Trigger when the address matches either the value in comparator A or the value in comparator B

A Then B — Trigger when the address matches the value in comparator B but only after the address for another cycle matched the value in comparator A. There can be any number of cycles after the A match and before the B match.

A AND B Data (Full Mode) — This is called a full mode because address, data, and R/W (optionally) must match within the same bus cycle to cause a trigger event. Comparator A checks address, the low byte of comparator B checks data, and R/W is checked against RWA if RWAEN = 1. The high-order half of comparator B is not used.

In full trigger modes it is not useful to specify a tag-type CPU breakpoint (BRKEN = TAG = 1), but if you do, the comparator B data match is ignored for the purpose of issuing the tag request to the CPU and the CPU breakpoint is issued when the comparator A address matches.

A AND NOT B Data (Full Mode) — Address must match comparator A, data must not match the low half of comparator B, and R/W must match RWA if RWAEN = 1. All three conditions must be met within the same bus cycle to cause a trigger.

In full trigger modes it is not useful to specify a tag-type CPU breakpoint (BRKEN = TAG = 1), but if you do, the comparator B data match is ignored for the purpose of issuing the tag request to the CPU and the CPU breakpoint is issued when the comparator A address matches.

Event-Only B (Store Data) — Trigger events occur each time the address matches the value in comparator B. Trigger events cause the data to be captured into the FIFO. The debug run ends when the FIFO becomes full.

A Then Event-Only B (Store Data) — After the address has matched the value in comparator A, a trigger event occurs each time the address matches the value in comparator B. Trigger events cause the data to be captured into the FIFO. The debug run ends when the FIFO becomes full.

Inside Range (A ≤ Address ≤ B) — A trigger occurs when the address is greater than or equal to the value in comparator A and less than or equal to the value in comparator B at the same time.

Outside Range (Address < A or Address > B) — A trigger occurs when the address is either less than the value in comparator A or greater than the value in comparator B.

16.3.6 Hardware Breakpoints

The BRKEN control bit in the DBGC register may be set to 1 to allow any of the trigger conditions described in Section 16.3.5, “Trigger Modes,” to be used to generate a hardware breakpoint request to the CPU. TAG in DBGC controls whether the breakpoint request will be treated as a tag-type breakpoint or a force-type breakpoint. A tag breakpoint causes the current opcode to be marked as it enters the instruction queue. If a tagged opcode reaches the end of the pipe, the CPU executes a BGND instruction to go to active background mode rather than executing the tagged opcode. A force-type breakpoint causes the CPU to finish the current instruction and then go to active background mode.

If the background mode has not been enabled (ENBDM = 1) by a serial WRITE_CONTROL command through the BKGD pin, the CPU will execute an SWI instruction instead of going to active background mode.

16.4 Register Definition

This section contains the descriptions of the BDC and DBG registers and control bits.

Refer to the high-page register summary in the device overview chapter of this data sheet for the absolute address assignments for all DBG registers. This section refers to registers and control bits only by their names.

16.4.1 BDC Registers and Control Bits

The BDC has two registers:

- The BDC status and control register (BDCSCR) is an 8-bit register containing control and status bits for the background debug controller.
- The BDC breakpoint match register (BDCBKPT) holds a 16-bit breakpoint match address.

These registers are accessed with dedicated serial BDC commands and are not located in the memory space of the target MCU (so they do not have addresses and cannot be accessed by user programs).

Some of the bits in the BDCSCR have write limitations; otherwise, these registers may be read or written at any time. For example, the ENBDM control bit may not be written while the MCU is in active background mode. (This prevents the ambiguous condition of the control bit forbidding active background mode while the MCU is already in active background mode.) Also, the four status bits (BDMACT, WS, WSF, and DVF) are read-only status indicators and can never be written by the WRITE_CONTROL serial BDC command. The clock switch (CLKSW) control bit may be read or written at any time.

16.4.1.1 BDC Status and Control Register (BDCSCR)

This register can be read or written by serial BDC commands (READ_STATUS and WRITE_CONTROL) but is not accessible to user programs because it is not located in the normal memory map of the MCU.

	7	6	5	4	3	2	1	0
R	ENBDM	BDMACT	BKPTEN	FTS	CLKSW	WS	WSF	DVF
W								
Normal Reset	0	0	0	0	0	0	0	0
Reset in Active BDM:	1	1	0	0	1	0	0	0

= Unimplemented or Reserved

Figure 16-5. BDC Status and Control Register (BDCSCR)

Table 16-2. BDCSCR Register Field Descriptions

Field	Description
7 ENBDM	**Enable BDM (Permit Active Background Mode)** — Typically, this bit is written to 1 by the debug host shortly after the beginning of a debug session or whenever the debug host resets the target and remains 1 until a normal reset clears it. 0 BDM cannot be made active (non-intrusive commands still allowed) 1 BDM can be made active to allow active background mode commands
6 BDMACT	**Background Mode Active Status** — This is a read-only status bit. 0 BDM not active (user application program running) 1 BDM active and waiting for serial commands
5 BKPTEN	**BDC Breakpoint Enable** — If this bit is clear, the BDC breakpoint is disabled and the FTS (force tag select) control bit and BDCBKPT match register are ignored. 0 BDC breakpoint disabled 1 BDC breakpoint enabled
4 FTS	**Force/Tag Select** — When FTS = 1, a breakpoint is requested whenever the CPU address bus matches the BDCBKPT match register. When FTS = 0, a match between the CPU address bus and the BDCBKPT register causes the fetched opcode to be tagged. If this tagged opcode ever reaches the end of the instruction queue, the CPU enters active background mode rather than executing the tagged opcode. 0 Tag opcode at breakpoint address and enter active background mode if CPU attempts to execute that instruction 1 Breakpoint match forces active background mode at next instruction boundary (address need not be an opcode)
3 CLKSW	**Select Source for BDC Communications Clock** — CLKSW defaults to 0, which selects the alternate BDC clock source. 0 Alternate BDC clock source 1 MCU bus clock

Table 16-2. BDCSCR Register Field Descriptions (continued)

Field	Description
2 WS	**Wait or Stop Status** — When the target CPU is in wait or stop mode, most BDC commands cannot function. However, the BACKGROUND command can be used to force the target CPU out of wait or stop and into active background mode where all BDC commands work. Whenever the host forces the target MCU into active background mode, the host should issue a READ_STATUS command to check that BDMACT = 1 before attempting other BDC commands. 0 Target CPU is running user application code or in active background mode (was not in wait or stop mode when background became active) 1 Target CPU is in wait or stop mode, or a BACKGROUND command was used to change from wait or stop to active background mode
1 WSF	**Wait or Stop Failure Status** — This status bit is set if a memory access command failed due to the target CPU executing a wait or stop instruction at or about the same time. The usual recovery strategy is to issue a BACKGROUND command to get out of wait or stop mode into active background mode, repeat the command that failed, then return to the user program. (Typically, the host would restore CPU registers and stack values and re-execute the wait or stop instruction.) 0 Memory access did not conflict with a wait or stop instruction 1 Memory access command failed because the CPU entered wait or stop mode
0 DVF	**Data Valid Failure Status** — This status bit is not used in the MC9S08AC60 Series because it does not have any slow access memory. 0 Memory access did not conflict with a slow memory access 1 Memory access command failed because CPU was not finished with a slow memory access

16.4.1.2 BDC Breakpoint Match Register (BDCBKPT)

This 16-bit register holds the address for the hardware breakpoint in the BDC. The BKPTEN and FTS control bits in BDCSCR are used to enable and configure the breakpoint logic. Dedicated serial BDC commands (READ_BKPT and WRITE_BKPT) are used to read and write the BDCBKPT register but is not accessible to user programs because it is not located in the normal memory map of the MCU. Breakpoints are normally set while the target MCU is in active background mode before running the user application program. For additional information about setup and use of the hardware breakpoint logic in the BDC, refer to Section 16.2.4, “BDC Hardware Breakpoint.”

16.4.2 System Background Debug Force Reset Register (SBDFR)

This register contains a single write-only control bit. A serial background mode command such as WRITE_BYTE must be used to write to SBDFR. Attempts to write this register from a user program are ignored. Reads always return 0x00.

	7	6	5	4	3	2	1	0
R	0	0	0	0	0	0	0	0
W								BDFR[1]
Reset	0	0	0	0	0	0	0	0

= Unimplemented or Reserved

[1] BDFR is writable only through serial background mode debug commands, not from user programs.

Figure 16-6. System Background Debug Force Reset Register (SBDFR)

Table 16-3. SBDFR Register Field Description

Field	Description
0 BDFR	**Background Debug Force Reset** — A serial active background mode command such as WRITE_BYTE allows an external debug host to force a target system reset. Writing 1 to this bit forces an MCU reset. This bit cannot be written from a user program.

16.4.3 DBG Registers and Control Bits

The debug module includes nine bytes of register space for three 16-bit registers and three 8-bit control and status registers. These registers are located in the high register space of the normal memory map so they are accessible to normal application programs. These registers are rarely if ever accessed by normal user application programs with the possible exception of a ROM patching mechanism that uses the breakpoint logic.

16.4.3.1 Debug Comparator A High Register (DBGCAH)

This register contains compare value bits for the high-order eight bits of comparator A. This register is forced to 0x00 at reset and can be read at any time or written at any time unless ARM = 1.

16.4.3.2 Debug Comparator A Low Register (DBGCAL)

This register contains compare value bits for the low-order eight bits of comparator A. This register is forced to 0x00 at reset and can be read at any time or written at any time unless ARM = 1.

16.4.3.3 Debug Comparator B High Register (DBGCBH)

This register contains compare value bits for the high-order eight bits of comparator B. This register is forced to 0x00 at reset and can be read at any time or written at any time unless ARM = 1.

16.4.3.4 Debug Comparator B Low Register (DBGCBL)

This register contains compare value bits for the low-order eight bits of comparator B. This register is forced to 0x00 at reset and can be read at any time or written at any time unless ARM = 1.

16.4.3.5 Debug FIFO High Register (DBGFH)

This register provides read-only access to the high-order eight bits of the FIFO. Writes to this register have no meaning or effect. In the event-only trigger modes, the FIFO only stores data into the low-order byte of each FIFO word, so this register is not used and will read 0x00.

Reading DBGFH does not cause the FIFO to shift to the next word. When reading 16-bit words out of the FIFO, read DBGFH before reading DBGFL because reading DBGFL causes the FIFO to advance to the next word of information.

16.4.3.6 Debug FIFO Low Register (DBGFL)

This register provides read-only access to the low-order eight bits of the FIFO. Writes to this register have no meaning or effect.

Reading DBGFL causes the FIFO to shift to the next available word of information. When the debug module is operating in event-only modes, only 8-bit data is stored into the FIFO (high-order half of each FIFO word is unused). When reading 8-bit words out of the FIFO, simply read DBGFL repeatedly to get successive bytes of data from the FIFO. It isn't necessary to read DBGFH in this case.

Do not attempt to read data from the FIFO while it is still armed (after arming but before the FIFO is filled or ARMF is cleared) because the FIFO is prevented from advancing during reads of DBGFL. This can interfere with normal sequencing of reads from the FIFO.

Reading DBGFL while the debugger is not armed causes the address of the most-recently fetched opcode to be stored to the last location in the FIFO. By reading DBGFH then DBGFL periodically, external host software can develop a profile of program execution. After eight reads from the FIFO, the ninth read will return the information that was stored as a result of the first read. To use the profiling feature, read the FIFO eight times without using the data to prime the sequence and then begin using the data to get a delayed picture of what addresses were being executed. The information stored into the FIFO on reads of DBGFL (while the FIFO is not armed) is the address of the most-recently fetched opcode.

16.4.3.7 Debug Control Register (DBGC)

This register can be read or written at any time.

	7	6	5	4	3	2	1	0
R W	DBGEN	ARM	TAG	BRKEN	RWA	RWAEN	RWB	RWBEN
Reset	0	0	0	0	0	0	0	0

Figure 16-7. Debug Control Register (DBGC)

Table 16-4. DBGC Register Field Descriptions

Field	Description
7 DBGEN	**Debug Module Enable** — Used to enable the debug module. DBGEN cannot be set to 1 if the MCU is secure. 0 DBG disabled 1 DBG enabled
6 ARM	**Arm Control** — Controls whether the debugger is comparing and storing information in the FIFO. A write is used to set this bit (and ARMF) and completion of a debug run automatically clears it. Any debug run can be manually stopped by writing 0 to ARM or to DBGEN. 0 Debugger not armed 1 Debugger armed
5 TAG	**Tag/Force Select** — Controls whether break requests to the CPU will be tag or force type requests. If BRKEN = 0, this bit has no meaning or effect. 0 CPU breaks requested as force type requests 1 CPU breaks requested as tag type requests
4 BRKEN	**Break Enable** — Controls whether a trigger event will generate a break request to the CPU. Trigger events can cause information to be stored in the FIFO without generating a break request to the CPU. For an end trace, CPU break requests are issued to the CPU when the comparator(s) and R/W meet the trigger requirements. For a begin trace, CPU break requests are issued when the FIFO becomes full. TRGSEL does not affect the timing of CPU break requests. 0 CPU break requests not enabled 1 Triggers cause a break request to the CPU
3 RWA	**R/W Comparison Value for Comparator A** — When RWAEN = 1, this bit determines whether a read or a write access qualifies comparator A. When RWAEN = 0, RWA and the R/W signal do not affect comparator A. 0 Comparator A can only match on a write cycle 1 Comparator A can only match on a read cycle
2 RWAEN	**Enable R/W for Comparator A** — Controls whether the level of R/W is considered for a comparator A match. 0 R/W is not used in comparison A 1 R/W is used in comparison A
1 RWB	**R/W Comparison Value for Comparator B** — When RWBEN = 1, this bit determines whether a read or a write access qualifies comparator B. When RWBEN = 0, RWB and the R/W signal do not affect comparator B. 0 Comparator B can match only on a write cycle 1 Comparator B can match only on a read cycle
0 RWBEN	**Enable R/W for Comparator B** — Controls whether the level of R/W is considered for a comparator B match. 0 R/W is not used in comparison B 1 R/W is used in comparison B

16.4.3.8 Debug Trigger Register (DBGT)

This register can be read any time, but may be written only if ARM = 0, except bits 4 and 5 are hard-wired to 0s.

	7	6	5	4	3	2	1	0
R	TRGSEL	BEGIN	0	0	TRG3	TRG2	TRG1	TRG0
W								
Reset	0	0	0	0	0	0	0	0

= Unimplemented or Reserved

Figure 16-8. Debug Trigger Register (DBGT)

Table 16-5. DBGT Register Field Descriptions

Field	Description
7 TRGSEL	**Trigger Type** — Controls whether the match outputs from comparators A and B are qualified with the opcode tracking logic in the debug module. If TRGSEL is set, a match signal from comparator A or B must propagate through the opcode tracking logic and a trigger event is only signalled to the FIFO logic if the opcode at the match address is actually executed. 0 Trigger on access to compare address (force) 1 Trigger if opcode at compare address is executed (tag)
6 BEGIN	**Begin/End Trigger Select** — Controls whether the FIFO starts filling at a trigger or fills in a circular manner until a trigger ends the capture of information. In event-only trigger modes, this bit is ignored and all debug runs are assumed to be begin traces. 0 Data stored in FIFO until trigger (end trace) 1 Trigger initiates data storage (begin trace)
3:0 TRG[3:0]	**Select Trigger Mode** — Selects one of nine triggering modes, as described below. 0000 A-only 0001 A OR B 0010 A Then B 0011 Event-only B (store data) 0100 A then event-only B (store data) 0101 A AND B data (full mode) 0110 A AND NOT B data (full mode) 0111 Inside range: A ≤ address ≤ B 1000 Outside range: address < A or address > B 1001 – 1111 (No trigger)

16.4.3.9 Debug Status Register (DBGS)

This is a read-only status register.

	7	6	5	4	3	2	1	0
R	AF	BF	ARMF	0	CNT3	CNT2	CNT1	CNT0
W								
Reset	0	0	0	0	0	0	0	0

= Unimplemented or Reserved

Figure 16-9. Debug Status Register (DBGS)

Table 16-6. DBGS Register Field Descriptions

Field	Description
7 AF	**Trigger Match A Flag** — AF is cleared at the start of a debug run and indicates whether a trigger match A condition was met since arming. 0 Comparator A has not matched 1 Comparator A match
6 BF	**Trigger Match B Flag** — BF is cleared at the start of a debug run and indicates whether a trigger match B condition was met since arming. 0 Comparator B has not matched 1 Comparator B match
5 ARMF	**Arm Flag** — While DBGEN = 1, this status bit is a read-only image of ARM in DBGC. This bit is set by writing 1 to the ARM control bit in DBGC (while DBGEN = 1) and is automatically cleared at the end of a debug run. A debug run is completed when the FIFO is full (begin trace) or when a trigger event is detected (end trace). A debug run can also be ended manually by writing 0 to ARM or DBGEN in DBGC. 0 Debugger not armed 1 Debugger armed
3:0 CNT[3:0]	**FIFO Valid Count** — These bits are cleared at the start of a debug run and indicate the number of words of valid data in the FIFO at the end of a debug run. The value in CNT does not decrement as data is read out of the FIFO. The external debug host is responsible for keeping track of the count as information is read out of the FIFO. 0000 Number of valid words in FIFO = No valid data 0001 Number of valid words in FIFO = 1 0010 Number of valid words in FIFO = 2 0011 Number of valid words in FIFO = 3 0100 Number of valid words in FIFO = 4 0101 Number of valid words in FIFO = 5 0110 Number of valid words in FIFO = 6 0111 Number of valid words in FIFO = 7 1000 Number of valid words in FIFO = 8

Appendix A
Electrical Characteristics and Timing Specifications

A.1 Introduction

This section contains electrical and timing specifications.

A.2 Parameter Classification

The electrical parameters shown in this supplement are guaranteed by various methods. To give the customer a better understanding the following classification is used and the parameters are tagged accordingly in the tables where appropriate:

Table A-1. Parameter Classifications

P	Those parameters are guaranteed during production testing on each individual device.
C	Those parameters are achieved by the design characterization by measuring a statistically relevant sample size across process variations.
T	Those parameters are achieved by design characterization on a small sample size from typical devices under typical conditions unless otherwise noted. All values shown in the typical column are within this category.
D	Those parameters are derived mainly from simulations.

NOTE

The classification is shown in the column labeled “C” in the parameter tables where appropriate.

A.3 Absolute Maximum Ratings

Absolute maximum ratings are stress ratings only, and functional operation at the maxima is not guaranteed. Stress beyond the limits specified in Table A-2 may affect device reliability or cause permanent damage to the device. For functional operating conditions, refer to the remaining tables in this section.

This device contains circuitry protecting against damage due to high static voltage or electrical fields; however, it is advised that normal precautions be taken to avoid application of any voltages higher than maximum-rated voltages to this high-impedance circuit. Reliability of operation is enhanced if unused inputs are tied to an appropriate logic voltage level (for instance, either V_{SS} or V_{DD}).

Table A-2. Absolute Maximum Ratings

Rating	Symbol	Value	Unit
Supply voltage	V_{DD}	−0.3 to + 5.8	V
Input voltage	V_{In}	− 0.3 to V_{DD} + 0.3	V
Instantaneous maximum current Single pin limit (applies to all port pins)[1], [2], [3]	I_D	± 25	mA
Maximum current into V_{DD}	I_{DD}	120	mA
Storage temperature	T_{stg}	−55 to +150	°C
Maximum junction temperature	T_J	150	°C

1 Input must be current limited to the value specified. To determine the value of the required current-limiting resistor, calculate resistance values for positive (V_{DD}) and negative (V_{SS}) clamp voltages, then use the larger of the two resistance values.

2 All functional non-supply pins are internally clamped to V_{SS} and V_{DD}.

3 Power supply must maintain regulation within operating V_{DD} range during instantaneous and operating maximum current conditions. If positive injection current ($V_{In} > V_{DD}$) is greater than I_{DD}, the injection current may flow out of V_{DD} and could result in external power supply going out of regulation. Ensure external V_{DD} load will shunt current greater than maximum injection current. This will be the greatest risk when the MCU is not consuming power. Examples are: if no system clock is present, or if the clock rate is very low which would reduce overall power consumption.

A.4 Thermal Characteristics

This section provides information about operating temperature range, power dissipation, and package thermal resistance. Power dissipation on I/O pins is usually small compared to the power dissipation in on-chip logic and it is user-determined rather than being controlled by the MCU design. In order to take $P_{I/O}$ into account in power calculations, determine the difference between actual pin voltage and V_{SS} or V_{DD} and multiply by the pin current for each I/O pin. Except in cases of unusually high pin current (heavy loads), the difference between pin voltage and V_{SS} or V_{DD} will be very small.

Table A-3. Thermal Characteristics

Rating	Symbol	Value	Unit
Operating temperature range (packaged)	T_A	T_L to T_H –40 to 125	°C
Thermal resistance [1,2,3,4]			
64-pin QFP			
1s		57	
2s2p		43	
64-pin LQFP			
1s		69	
2s2p		54	
48-pin QFN			
1s		84	
2s2p	θ_{JA}	27	°C/W
44-pin LQFP			
1s		73	
2s2p		56	
32-pin LQFP			
1s		85	
2s2p		56	

1 Junction temperature is a function of die size, on-chip power dissipation, package thermal resistance, mounting site (board) temperature, ambient temperature, air flow, power dissipation of other components on the board, and board thermal resistance.

2 Junction to Ambient Natural Convection

3 1s - Single Layer Board, one signal layer

4 2s2p - Four Layer Board, 2 signal and 2 power layers

The average chip-junction temperature (T_J) in °C can be obtained from:

$$T_J = T_A + (P_D \times \theta_{JA}) \quad \textit{Eqn. A-1}$$

where:

T_A = Ambient temperature, °C
θ_{JA} = Package thermal resistance, junction-to-ambient, °C/W
$P_D = P_{int} + P_{I/O}$
$P_{int} = I_{DD} \times V_{DD}$, Watts — chip internal power
$P_{I/O}$ = Power dissipation on input and output pins — user determined

For most applications, $P_{I/O} << P_{int}$ and can be neglected. An approximate relationship between P_D and T_J (if $P_{I/O}$ is neglected) is:

$$P_D = K \div (T_J + 273°C) \quad \textit{Eqn. A-2}$$

Solving equations 1 and 2 for K gives:

$$K = P_D \times (T_A + 273°C) + \theta_{JA} \times (P_D)^2 \quad \textit{Eqn. A-3}$$

where K is a constant pertaining to the particular part. K can be determined from equation 3 by measuring P_D (at equilibrium) for a known T_A. Using this value of K, the values of P_D and T_J can be obtained by solving equations 1 and 2 iteratively for any value of T_A.

A.5 ESD Protection and Latch-Up Immunity

Although damage from electrostatic discharge (ESD) is much less common on these devices than on early CMOS circuits, normal handling precautions should be used to avoid exposure to static discharge. Qualification tests are performed to ensure that these devices can withstand exposure to reasonable levels of static without suffering any permanent damage.

All ESD testing is in conformity with AEC-Q100 Stress Test Qualification for Automotive Grade Integrated Circuits and JEDEC Standard for Non-Automotive Grade Integrated Circuits. During the device qualification ESD stresses were performed for the Human Body Model (HBM), the Machine Model (MM) and the Charge Device Model (CDM).

A device is defined as a failure if after exposure to ESD pulses the device no longer meets the device specification. Complete DC parametric and functional testing is performed per the applicable device specification at room temperature followed by hot temperature, unless specified otherwise in the device specification.

Table A-4. ESD and Latch-up Test Conditions

Model	Description	Symbol	Value	Unit
Human Body	Series Resistance	R1	1500	Ω
	Storage Capacitance	C	100	pF
	Number of Pulse per pin	–	3	

Table A-4. ESD and Latch-up Test Conditions

Machine	Series Resistance	R1	0	Ω
	Storage Capacitance	C	200	pF
	Number of Pulse per pin	–	3	
Latch-up	Minimum input voltage limit		– 2.5	V
	Maximum input voltage limit		7.5	V

Table A-5. ESD and Latch-Up Protection Characteristics

Num	C	Rating	Symbol	Min	Max	Unit
1	C	Human Body Model (HBM)	V_{HBM}	± 2000	–	V
2	C	Machine Model (MM)	V_{MM}	± 200	–	V
3	C	Charge Device Model (CDM)	V_{CDM}	± 500	–	V
4	C	Latch-up Current at T_A = 125°C	I_{LAT}	± 100	–	mA

A.6 DC Characteristics

This section includes information about power supply requirements, I/O pin characteristics, and power supply current in various operating modes.

Table A-6. DC Characteristics

Num	C	Parameter	Symbol	Min	Typ[1]	Max	Unit
1	P	Output high voltage — Low Drive (PTxDSn = 0) 5 V, I_{Load} = –2 mA 3 V, I_{Load} = –0.6 mA 5 V, I_{Load} = –0.4 mA 3 V, I_{Load} = –0.24 mA	V_{OH}	 V_{DD} – 1.5 V_{DD} – 1.5 V_{DD} – 0.8 V_{DD} – 0.8	 — — — —	 — — — —	V
		Output high voltage — High Drive (PTxDSn = 1) 5 V, I_{Load} = –10 mA 3 V, I_{Load} = –3 mA 5 V, I_{Load} = –2 mA 3 V, I_{Load} = –0.4 mA		 V_{DD} – 1.5 V_{DD} – 1.5 V_{DD} – 0.8 V_{DD} – 0.8	 — — — —	 — — — —	
2	P	Output low voltage — Low Drive (PTxDSn = 0) 5 V, I_{Load} = 2 mA 3 V, I_{Load} = 0.6 mA 5 V, I_{Load} = 0.4 mA 3 V, I_{Load} = 0.24 mA	V_{OL}	 1.5 1.5 0.8 0.8	 — — — —	 — — — —	V
		Output low voltage — High Drive (PTxDSn = 1) 5 V, I_{Load} = 10 mA 3 V, I_{Load} = 3 mA 5 V, I_{Load} = 2 mA 3 V, I_{Load} = 0.4 mA		 1.5 1.5 0.8 0.8	 — — — —	 — — — —	
3	P	Output high current — Max total I_{OH} for all ports 5V 3V	I_{OHT}	 — —	 — —	 100 60	mA
4	P	Output low current — Max total I_{OL} for all ports 5V 3V	I_{OLT}	 — —	 — —	 100 60	mA
5	P	Input high voltage; all digital inputs 2.7v ≤ V_{DD} 4.5v	V_{IH}	0.70xV_{DD}	—	—	V
		4.5v ≤ V_{DD} ≤ 5.5v	V_{IH}	0.65xV_{DD}	—	—	
6	P	Input low voltage; all digital inputs	V_{IL}	—	—	0.35 x V_{DD}	
7	P	Input hysteresis; all digital inputs	V_{hys}	0.06 x V_{DD}			mV
8	P	Input leakage current; input only pins[2]	$\|I_{In}\|$	—	0.1	1	μA
9	P	High Impedance (off-state) leakage current[2]	$\|I_{OZ}\|$	—	0.1	1	μA
10	P	Internal pullup resistors[3]	R_{PU}	20	45	65	kΩ
11	P	Internal pulldown resistors[4]	R_{PD}	20	45	65	kΩ
12	C	Input Capacitance; all non-supply pins	C_{In}	—	—	8	pF
13	D	RAM retention voltage	V_{RAM}	—	0.6	1.0	V
14	P	POR rearm voltage	V_{POR}	0.9	1.4	2.0	V
15	D	POR rearm time	t_{POR}	10	—	—	μs

Table A-6. DC Characteristics (continued)

Num	C	Parameter	Symbol	Min	Typ[1]	Max	Unit
16	P	Low-voltage detection threshold — high range V_{DD} falling V_{DD} rising	V_{LVDH}	 4.2 4.3	 4.3 4.4	 4.4 4.5	V
17	P	Low-voltage detection threshold — low range V_{DD} falling V_{DD} rising	V_{LVDL}	 2.48 2.54	 2.56 2.62	 2.64 2.7	V
18	P	Low-voltage warning threshold — high range V_{DD} falling V_{DD} rising	V_{LVWH}	 4.2 4.3	 4.3 4.4	 4.4 4.5	V
19	P	Low-voltage warning threshold — low range V_{DD} falling V_{DD} rising	V_{LVWL}	 2.48 2.54	 2.56 2.62	 2.64 2.7	V
20	P	Low-voltage inhibit reset/recover hysteresis 5V 3V	V_{hys}	 — —	 100 60	 — —	mV
21	P	Bandgap Voltage Reference[5]	V_{BG}	1.185	1.2	1.215	V
22	D	DC Injection Current[6, 7, 8, 9] Single pin limit $V_{IN} > V_{DD}$ $V_{IN} < V_{SS}$ Total MCU limit, includes sum of all stressed pins $V_{IN} > V_{DD}$ $V_{IN} < V_{SS}$	I_{IC}	 0 0 0 0	—	 2 –0.2 25 –5	mA

1 Typical values are based on characterization data at 25°C unless otherwise stated.

2 Measured with $V_{In} = V_{DD}$ or V_{SS}.

3 Measured with $V_{In} = V_{SS}$.

4 Measured with $V_{In} = V_{DD}$.

5 Factory trimmed at V_{DD} = 5.0 V, Temp = 25 °C.

6 Power supply must maintain regulation within operating V_{DD} range during instantaneous and operating maximum current conditions. If positive injection current ($V_{In} > V_{DD}$) is greater than I_{DD}, the injection current may flow out of V_{DD} and could result in external power supply going out of regulation. Ensure external V_{DD} load will shunt current greater than maximum injection current. This will be the greatest risk when the MCU is not consuming power. Examples are: if no system clock is present, or if clock rate is very low which (would reduce overall power consumption).

7 All functional non-supply pins are internally clamped to V_{SS} and V_{DD}.

8 Input must be current limited to the value specified. To determine the value of the required current-limiting resistor, calculate resistance values for positive and negative clamp voltages, then use the larger of the two values.

9 IRQ does not have a clamp diode to V_{DD}. Do not drive IRQ above V_{DD}.

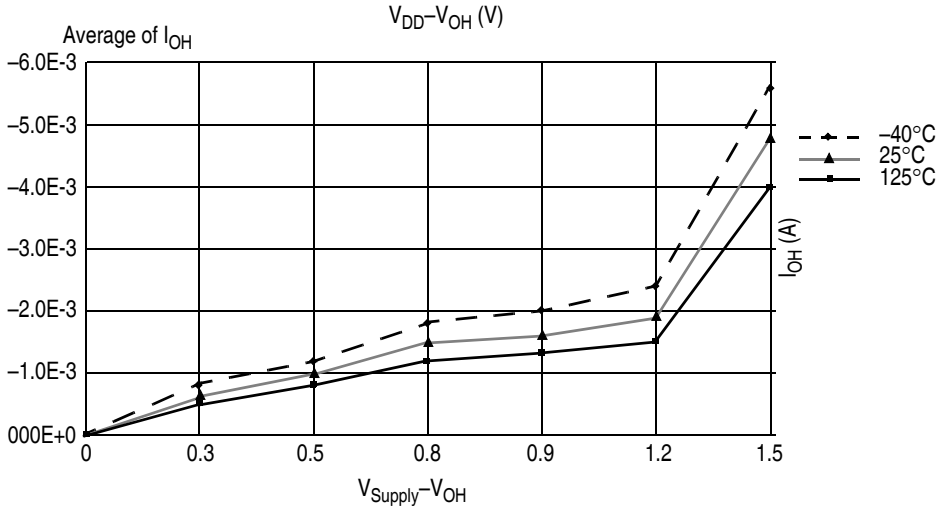

Figure A-1. Typical I_{OH} (Low Drive) vs $V_{DD}–V_{OH}$ at V_{DD} = 3 V

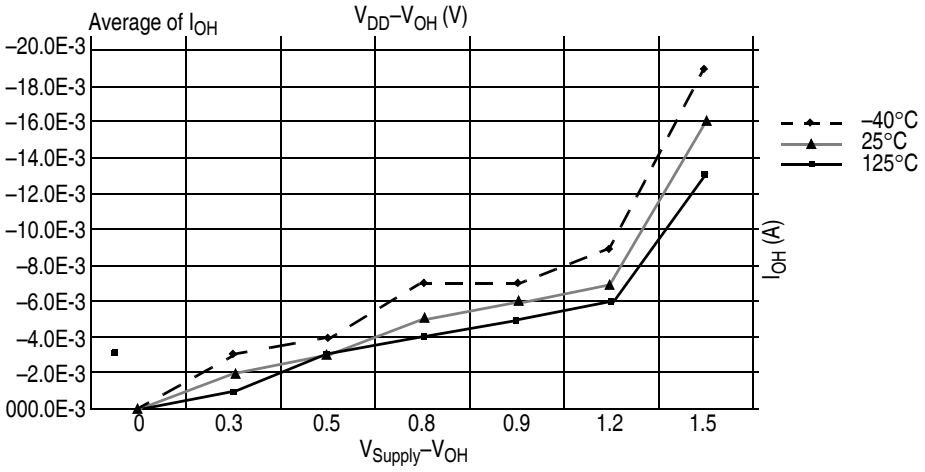

Figure A-2. Typical I_{OH} (High Drive) vs $V_{DD}–V_{OH}$ at V_{DD} = 3 V

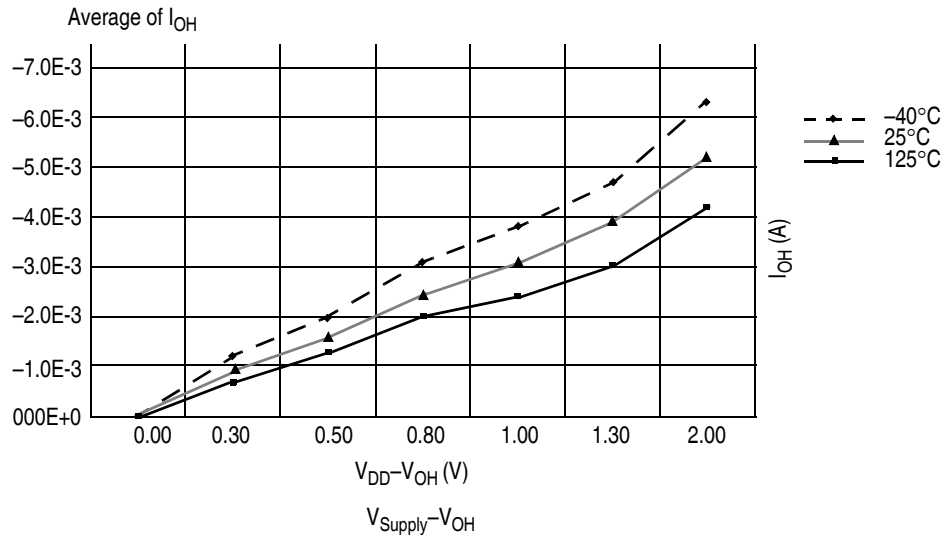

Figure A-3. Typical I_{OH} (Low Drive) vs $V_{DD}–V_{OH}$ at V_{DD} = 5 V

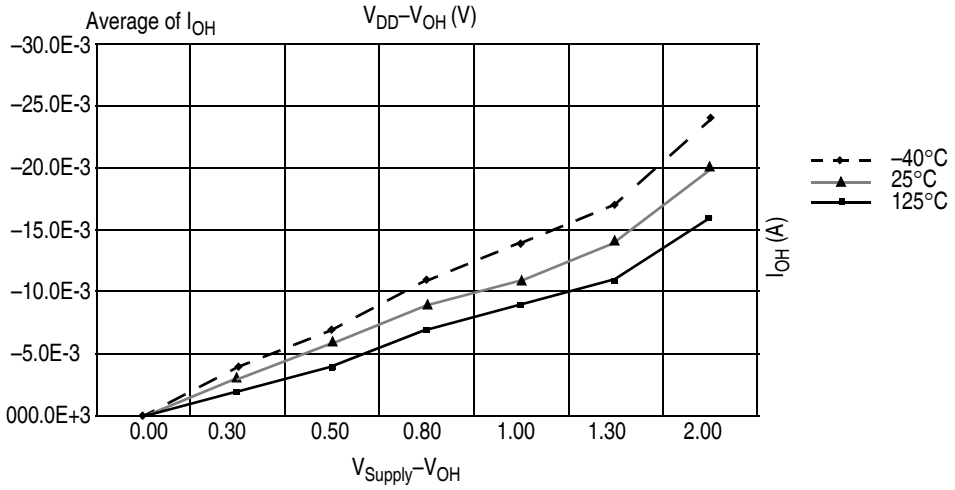

Figure A-4. Typical I_{OH} (High Drive) vs $V_{DD}–V_{OH}$ at V_{DD} = 5 V

A.7 Supply Current Characteristics

Table A-7. Supply Current Characteristics

Num	C	Parameter	Symbol	V_{DD} (V)	Typ[1]	Max[2]	Unit	Temp (°C)
1	C	Run supply current[3] measured at (CPU clock = 2 MHz, f_{Bus} = 1 MHz)	RI_{DD}	5	1.0	1.3[4]	mA	–40 to 125°C
				3	0.9	1.1		
2	C	Run supply current[5] measured at (CPU clock = 16 MHz, f_{Bus} = 8 MHz)	RI_{DD}	5	6.5	8.0[6]	mA	–40 to 125°C
				3	5.5	6.5		
3	P	Stop2 mode supply current	$S2I_{DD}$	5	0.900	18.0 60[4]	μA	–40 to 85°C –40 to 125°C
				3	0.720	17.0 50	μA	–40 to 85°C –40 to 125°C
4	P	Stop3 mode supply current	$S3I_{DD}$	5	0.975	20.0 90[4]	μA	–40 to 85°C –40 to 125°C
				3	0.825	19.0 85	μA	–40 to 85°C –40 to 125°C
5	C	RTI adder to stop2 or stop3[7]	$S23I_{DDRTI}$	5	300	500 500	nA	–40 to 85°C –40 to 125°C
				3	300	500 500	nA	–40 to 85°C –40 to 125°C
6	C	LVD adder to stop3 (LVDE = LVDSE = 1)	$S3I_{DDLVD}$	5	110	180	μA	–40 to 85°C –40 to 125°C
				3	90	160	μA	–40 to 85°C –40 to 125°C
7	C	Adder to stop3 for oscillator enabled[8] (OSCSTEN =1)	$S3I_{DDOSC}$	5,3	5	8	μA μA	–40 to 85°C –40 to 125°C

1 Typical values are based on characterization data at 25°C unless otherwise stated. See Figure A-5 through Figure A-7 for typical curves across voltage/temperature.

2 Values given here are preliminary estimates prior to completing characterization.

3 All modules except ADC active, ICG configured for FBE, and does not include any dc loads on port pins

4 Every unit tested to this parameter. All other values in the Max column are guaranteed by characterization.

5 All modules except ADC active, ICG configured for FBE, and does not include any dc loads on port pins

6 Every unit tested to this parameter. All other values in the Max column are guaranteed by characterization.

7 Most customers are expected to find that auto-wakeup from stop2 or stop3 can be used instead of the higher current wait mode. Wait mode typical is 560 μA at 3 V with f_{Bus} = 1 MHz.

8 Values given under the following conditions: low range operation (RANGE = 0) with a 32.768kHz crystal, low power mode (HGO = 0), clock monitor disabled (LOCD = 1).

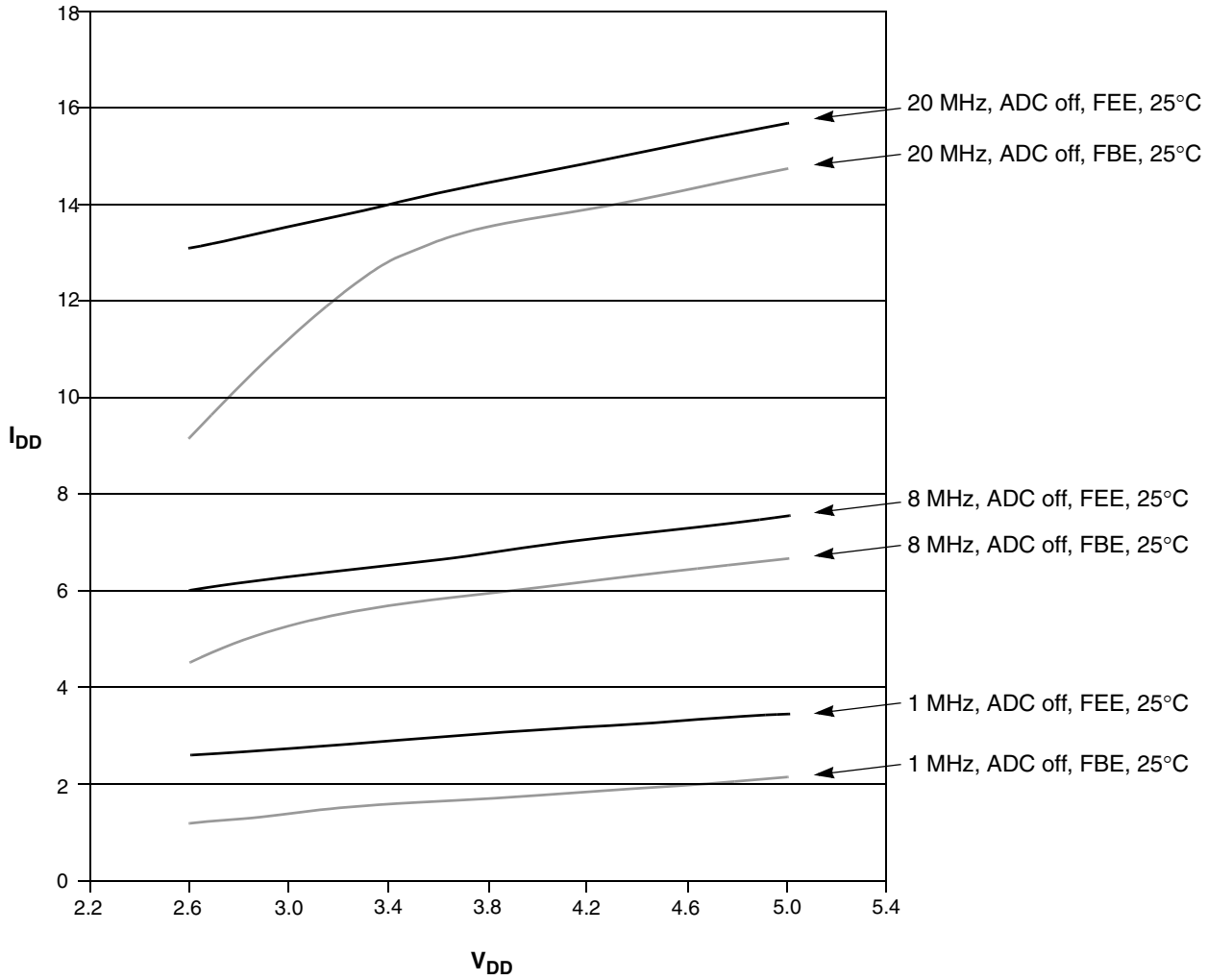

Note: External clock is square wave supplied by function generator. For FEE mode, external reference frequency is 4 MHz

Figure A-5. Typical Run I_{DD} for FBE and FEE Modes, I_{DD} vs. V_{DD}

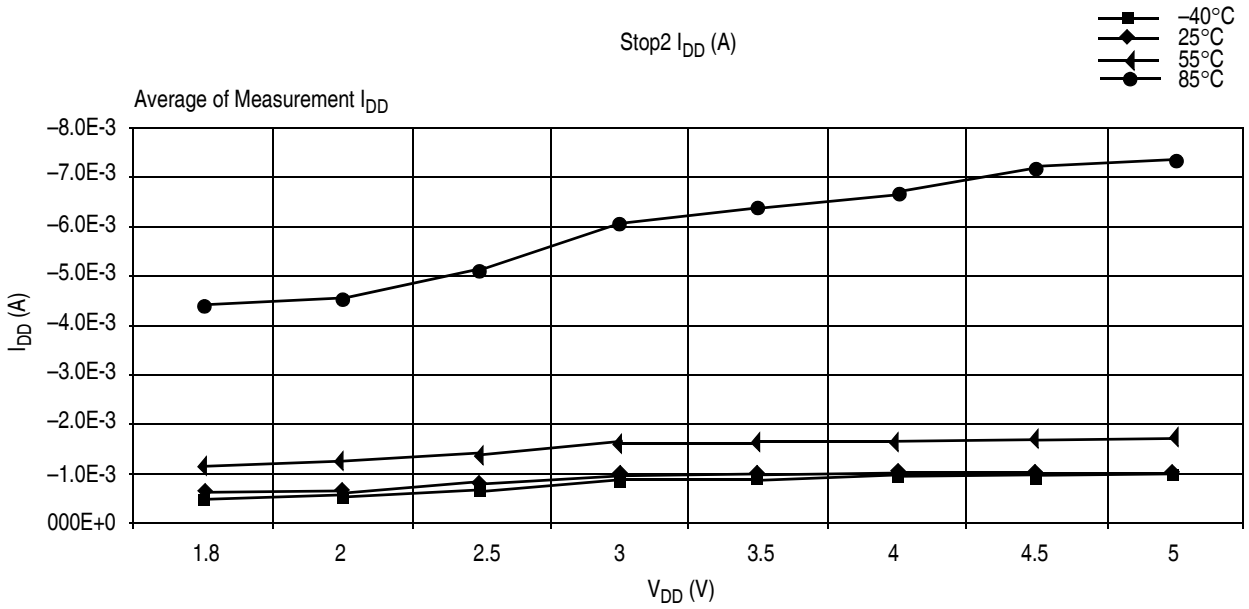

Figure A-6. Typical Stop 2 I_{DD}

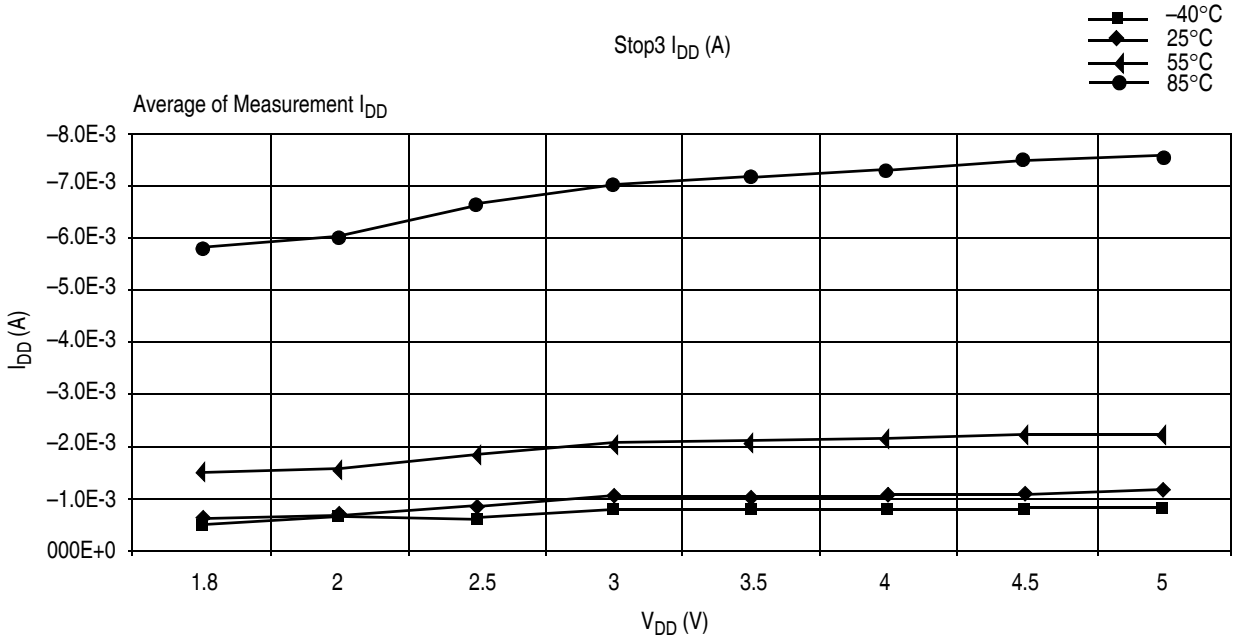

Figure A-7. Typical Stop3 I_{DD}

A.8 ADC Characteristics

Table A-8. 5 Volt 10-bit ADC Operating Conditions

Characteristic	Conditions	Symb	Min	Typ[1]	Max	Unit
Supply voltage	Absolute	V_{DDAD}	2.7	—	5.5	V
	Delta to V_{DD} (V_{DD}–V_{DDAD})[2]	ΔV_{DDAD}	–100	0	+100	mV
Ground voltage	Delta to V_{SS} (V_{SS}–V_{SSAD})[2]	ΔV_{SSAD}	–100	0	+100	mV
Ref voltage high		V_{REFH}	2.7	V_{DDAD}	V_{DDAD}	V
Ref voltage low		V_{REFL}	V_{SSAD}	V_{SSAD}	V_{SSAD}	V
Supply current	Stop, reset, module off	I_{DDAD}	—	0.011	1	μA
Input Voltage		V_{ADIN}	V_{REFL}	—	V_{REFH}	V
Input capacitance		C_{ADIN}	—	4.5	5.5	pF
Input resistance		R_{ADIN}	—	3	5	kΩ
Analog source resistance External to MCU	10-bit mode f_{ADCK} > 4MHz f_{ADCK} < 4MHz	R_{AS}	— —	— —	5 10	kΩ
	8-bit mode (all valid f_{ADCK})		—	—	10	
ADC conversion clock frequency	High speed (ADLPC = 0)	f_{ADCK}	0.4	—	8.0	MHz
	Low power (ADLPC = 1)		0.4	—	4.0	
Temp Sensor Slope	–40°C– 25°C	m	—	3.266	—	mV/°C
	25°C– 125°C			3.638	—	
Temp Sensor Voltage	25°C	V_{TEMP25}	—	1.396	—	V

1 Typical values assume V_{DDAD} = 5.0 V, Temp = 25°C, f_{ADCK} = 1.0MHz unless otherwise stated. Typical values are for reference only and are not tested in production.

2 dc potential difference.

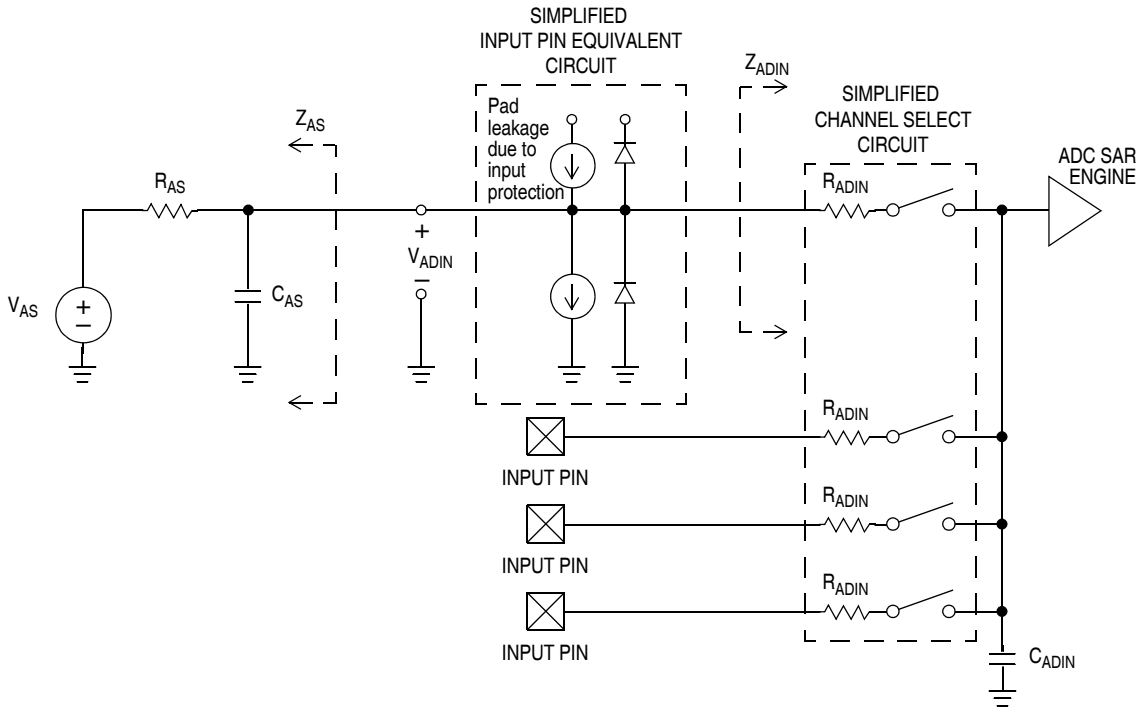

Figure A-8. ADC Input Impedance Equivalency Diagram

Table A-9. 5 Volt 10-bit ADC Characteristics ($V_{REFH} = V_{DDAD}$, $V_{REFL} = V_{SSAD}$)

Characteristic	Conditions	C	Symb	Min	Typ[1]	Max	Unit
Supply current ADLPC = 1 ADLSMP = 1 ADCO = 1		T	I_{DDAD}	—	133	—	μA
Supply current ADLPC = 1 ADLSMP = 0 ADCO = 1		T	I_{DDAD}	—	218	—	μA
Supply current ADLPC = 0 ADLSMP = 1 ADCO = 1		T	I_{DDAD}	—	327	—	μA
Supply current ADLPC = 0 ADLSMP = 0 ADCO = 1		T	I_{DDAD}	—	582	—	μA
	$V_{DDAD} \leq 5.5$ V	P		—	—	1	mA
ADC asynchronous clock source $t_{ADACK} = 1/f_{ADACK}$	High speed (ADLPC = 0)	P	f_{ADACK}	2	3.3	5	MHz
	Low power (ADLPC = 1)			1.25	2	3.3	
Conversion time (Including sample time)	Short sample (ADLSMP = 0)	P	t_{ADC}	—	20	—	ADCK cycles
	Long sample (ADLSMP = 1)			—	40	—	
Sample time	Short sample (ADLSMP = 0)	P	t_{ADS}	—	3.5	—	ADCK cycles
	Long sample (ADLSMP = 1)			—	23.5	—	
Total unadjusted error Includes quantization	10-bit mode	P	E_{TUE}	—	±1	±2.5	LSB[2]
	8-bit mode			—	±0.5	±1.0	
Differential non-linearity	10-bit mode	P	DNL	—	±0.5	±1.0	LSB[2]
	8-bit mode			—	±0.3	±0.5	
	Monotonicity and no-missing-codes guaranteed						
Integral non-linearity	10-bit mode	C	INL	—	±0.5	±1.0	LSB[2]
	8-bit mode			—	±0.3	±0.5	
Zero-scale error $V_{ADIN} = V_{SSA}$	10-bit mode	P	E_{ZS}	—	±0.5	±1.5	LSB[2]
	8-bit mode			—	±0.5	±0.5	
Full-scale error $V_{ADIN} = V_{DDA}$	10-bit mode	P	E_{FS}	—	±0.5	±1.5	LSB[2]
	8-bit mode			—	±0.5	±0.5	
Quantization error	10-bit mode	D	E_Q	—	—	±0.5	LSB[2]
	8-bit mode			—	—	±0.5	

Table A-9. 5 Volt 10-bit ADC Characteristics ($V_{REFH} = V_{DDAD}$, $V_{REFL} = V_{SSAD}$)

Characteristic	Conditions	C	Symb	Min	Typ[1]	Max	Unit
Input leakage error Pad leakage[3] * R_{AS}	10-bit mode	D	E_{IL}	—	±0.2	±2.5	LSB[2]
	8-bit mode			—	±0.1	±1	

1 Typical values assume V_{DDAD} = 5.0V, Temp = 25C, f_{ADCK}=1.0 MHz unless otherwise stated. Typical values are for reference only and are not tested in production.

2 1 LSB = $(V_{REFH} – V_{REFL})/2^N$

3 Based on input pad leakage current. Refer to pad electricals.

A.9 Internal Clock Generation Module Characteristics

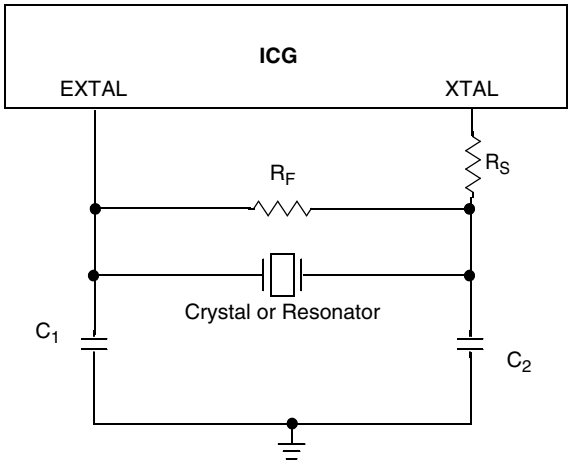

Table A-10. ICG DC Electrical Specifications (Temperature Range = –40 to 125°C Ambient)

Characteristic	Symbol	Min	Typ[1]	Max	Unit
Load capacitors	C_1 C_2	See Note [2]			
Feedback resistor Low range (32k to 100 kHz) High range (1M – 16 MHz)	R_F		 10 1		 MΩ MΩ
Series resistor Low range Low Gain (HGO = 0) High Gain (HGO = 1) High range Low Gain (HGO = 0) High Gain (HGO = 1) ≥ 8 MHz 4 MHz 1 MHz	R_S	 — — — — — —	 0 100 0 0 10 20	 — — — — — —	kΩ

1 Typical values are based on characterization data at V_{DD} = 5.0V, 25°C or is typical recommended value.

2 See crystal or resonator manufacturer's recommendation.

A.9.1 ICG Frequency Specifications

Table A-11. ICG Frequency Specifications

(V_{DDA} = V_{DDA} (min) to V_{DDA} (max), Temperature Range = –40 to 125°C Ambient)

Num	C	Characteristic	Symbol	Min	Typ[1]	Max	Unit
1	T	Oscillator crystal or resonator (REFS = 1) (Fundamental mode crystal or ceramic resonator) Low range High range High Gain, FBE (HGO = 1,CLKS = 10) High Gain, FEE (HGO = 1,CLKS = 11) Low Power, FBE (HGO = 0, CLKS = 10) Low Power, FEE (HGO = 0, CLKS = 11)	 flo fhi_byp fhi_eng flp_byp flp_eng	 32 1 2 1 2	 — — — 	 100 16 10 8 8	 kHz MHz MHz MHz MHz
2	T	Input clock frequency (CLKS = 11, REFS = 0) Low range High range	 f_{lo} f_{hi_eng}	 32 2	 — —	 100 10	 kHz MHz
3	T	Input clock frequency (CLKS = 10, REFS = 0)	f_{Extal}	0	—	40	MHz
4	T	Internal reference frequency (untrimmed)	$f_{ICGIRCLK}$	182.25	243	303.75	kHz
5	T	Duty cycle of input clock (REFS = 0)	t_{dc}	40	—	60	%
6	P	Output clock ICGOUT frequency CLKS = 10, REFS = 0 All other cases	f_{ICGOUT}	 f_{Extal} (min) f_{lo} (min)	 — —	 f_{Extal} (max) $f_{ICGDCLKmax}$(max)	MHz
7	T	Minimum DCO clock (ICGDCLK) frequency	$f_{ICGDCLKmin}$	8	—		MHz
8	T	Maximum DCO clock (ICGDCLK) frequency	$f_{ICGDCLKmax}$		—	40	MHz
9	P	Self-clock mode (ICGOUT) frequency [2]	f_{Self}	$f_{ICGDCLKmin}$		$f_{ICGDCLKmax}$	MHz
10	T	Self-clock mode reset (ICGOUT) frequency	f_{Self_reset}	5.5	8	10.5	MHz
11	T	Loss of reference frequency [3] Low range High range	f_{LOR}	 5 50		 25 500	kHz
12	T	Loss of DCO frequency [4]	f_{LOD}	0.5		1.5	MHz
13	T	Crystal start-up time [5, 6] Low range High range	 t_{CSTL} t_{CSTH}	 — —	 430 4	 — —	ms
14	T	FLL lock time [, 7] Low range High range	 t_{Lockl} t_{Lockh}	 — —		 2 2	ms
15	T	FLL frequency unlock range	n_{Unlock}	–4*N		4*N	counts
16	T	FLL frequency lock range	n_{Lock}	–2*N		2*N	counts
17	T	ICGOUT period jitter, [, 8] measured at f_{ICGOUT} Max Long term jitter (averaged over 2 ms interval)	C_{Jitter}	—		0.2	% f_{ICG}
18	P	Internal oscillator deviation from trimmed frequency[9] V_{DD} = 2.7 – 5.5 V, (constant temperature) V_{DD} = 5.0 V ±10%, –40° C to 125°C	ACC_{int}	 — —	 ±0.5 ±0.5	 ±2 ±2	%

[1] Typical values are based on characterization data at V_{DD} = 5.0V, 25°C unless otherwise stated.

[2] Self-clocked mode frequency is the frequency that the DCO generates when the FLL is open-loop.

[3] Loss of reference frequency is the reference frequency detected internally, which transitions the ICG into self-clocked mode if it is not in the desired range.

[4] Loss of DCO frequency is the DCO frequency detected internally, which transitions the ICG into FLL bypassed external mode (if an external reference exists) if it is not in the desired range.

[5] This parameter is characterized before qualification rather than 100% tested.

[6] Proper PC board layout procedures must be followed to achieve specifications.

[7] This specification applies to the period of time required for the FLL to lock after entering FLL engaged internal or external modes. If a crystal/resonator is being used as the reference, this specification assumes it is already running.

[8] Jitter is the average deviation from the programmed frequency measured over the specified interval at maximum f_{ICGOUT}. Measurements are made with the device powered by filtered supplies and clocked by a stable external clock signal. Noise injected into the FLL circuitry via V_{DDA} and V_{SSA} and variation in crystal oscillator frequency increase the C_{Jitter} percentage for a given interval.

[9] See Figure A-9.

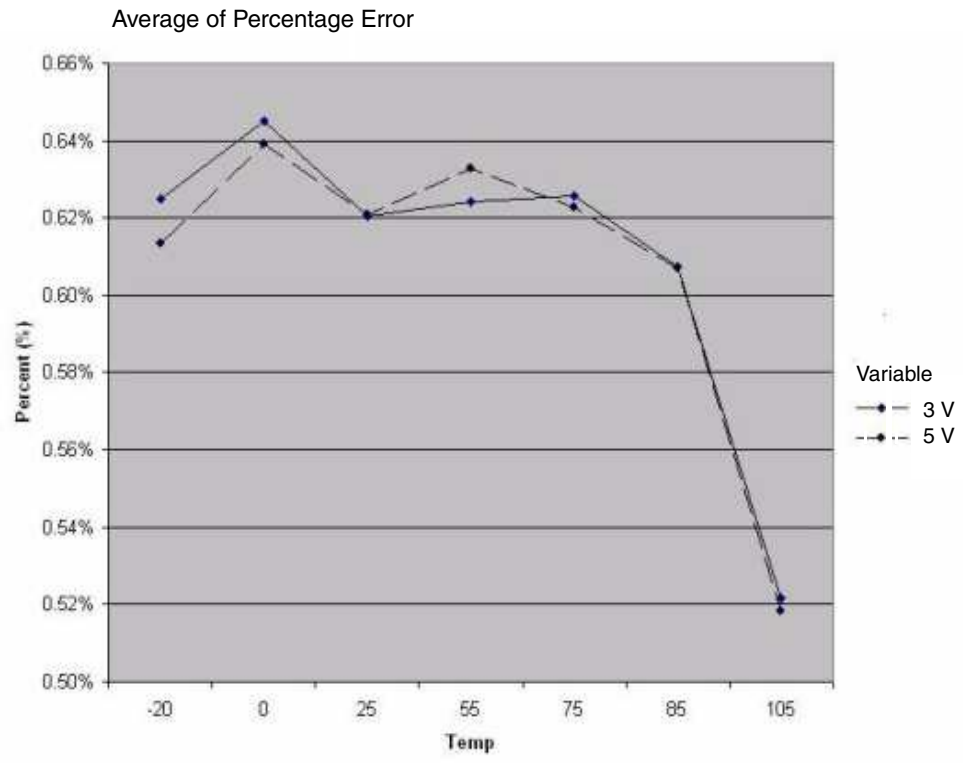

Figure A-9. Internal Oscillator Deviation from Trimmed Frequency

A.10 AC Characteristics

This section describes ac timing characteristics for each peripheral system. For detailed information about how clocks for the bus are generated, see Chapter 10, "Internal Clock Generator (S08ICGV4)."

A.10.1 Control Timing

Table A-12. Control Timing

Num	C	Parameter	Symbol	Min	Typ[1]	Max	Unit
1		Bus frequency ($t_{cyc} = 1/f_{Bus}$)	f_{Bus}	dc	—	20	MHz
2		Real-time interrupt internal oscillator period	t_{RTI}	600		1500	µs
3		External reset pulse width[2] ($t_{cyc} = 1/f_{Self_reset}$)	t_{extrst}	1.5 x t_{Self_reset}		—	ns
4		Reset low drive[3]	t_{rstdrv}	34 x t_{cyc}		—	ns
5		Active background debug mode latch setup time	t_{MSSU}	25		—	ns
6		Active background debug mode latch hold time	t_{MSH}	25		—	ns
7		IRQ pulse width Asynchronous path[2] Synchronous path[4]	t_{ILIH}, t_{IHIL}	100 1.5 x t_{cyc}	—	—	ns
8		KBIPx pulse width Asynchronous path[2] Synchronous path[3]	t_{ILIH}, t_{IHIL}	100 1.5 x t_{cyc}	—	—	ns
9		Port rise and fall time — High output drive (PTxDS) (load = 50 pF)[5] Slew rate control disabled (PTxSE = 0) Slew rate control enabled (PTxSE = 1)	t_{Rise}, t_{Fall}	— —	3 30		ns

1 Typical values are based on characterization data at V_{DD} = 5.0V, 25°C unless otherwise stated.

2 This is the shortest pulse that is guaranteed to be recognized as a reset pin request. Shorter pulses are not guaranteed to override reset requests from internal sources.

3 When any reset is initiated, internal circuitry drives the reset pin low for about 34 bus cycles and then samples the level on the reset pin about 38 bus cycles later to distinguish external reset requests from internal requests.

4 This is the minimum pulse width that is guaranteed to pass through the pin synchronization circuitry. Shorter pulses may or may not be recognized. In stop mode, the synchronizer is bypassed so shorter pulses can be recognized in that case.

5 Timing is shown with respect to 20% V_{DD} and 80% V_{DD} levels. Temperature range –40°C to 125°C.

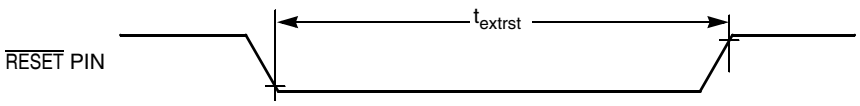

Figure A-10. Reset Timing

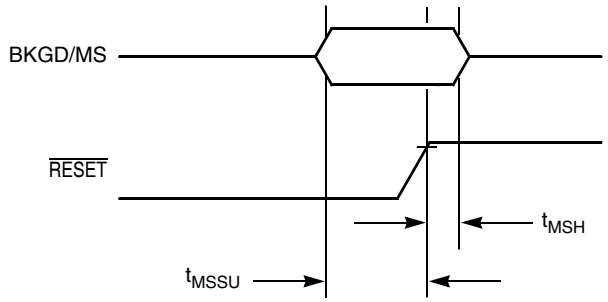

Figure A-11. Active Background Debug Mode Latch Timing

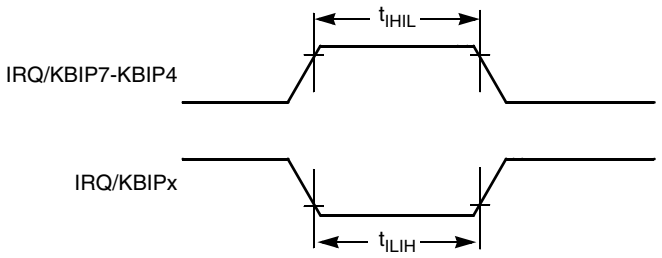

Figure A-12. IRQ/KBIPx Timing

A.10.2 Timer/PWM (TPM) Module Timing

Synchronizer circuits determine the shortest input pulses that can be recognized or the fastest clock that can be used as the optional external source to the timer counter. These synchronizers operate from the current bus rate clock.

Table A-13. TPM Input Timing

Function	Symbol	Min	Max	Unit
External clock frequency	f_{TPMext}	dc	$f_{Bus}/4$	MHz
External clock period	t_{TPMext}	4	—	t_{cyc}
External clock high time	t_{clkh}	1.5	—	t_{cyc}
External clock low time	t_{clkl}	1.5	—	t_{cyc}
Input capture pulse width	t_{ICPW}	1.5	—	t_{cyc}

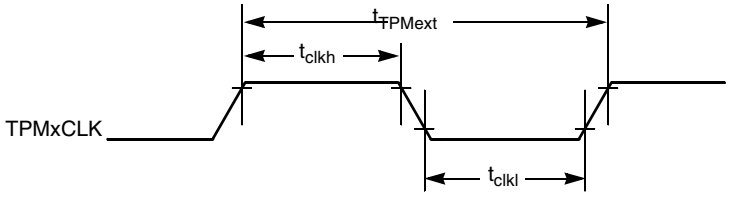

Figure A-13. Timer External Clock

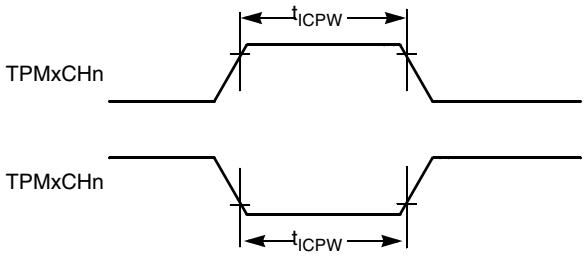

Figure A-14. Timer Input Capture Pulse

A.11 SPI Characteristics

Table A-14 and Figure A-15 through Figure A-18 describe the timing requirements for the SPI system.

Table A-14. SPI Electrical Characteristic

Num[1]	C	Characteristic[2]	Symbol	Min	Max	Unit
		Operating frequency[3] Master Slave	f_{op} f_{op}	$f_{Bus}/2048$ dc	$f_{Bus}/2$ $f_{Bus}/4$	Hz
1		Cycle time Master Slave	t_{SCK} t_{SCK}	2 4	2048 —	t_{cyc} t_{cyc}
2		Enable lead time Master Slave	t_{Lead} t_{Lead}	— 1/2	1/2 —	t_{SCK} t_{SCK}
3		Enable lag time Master Slave	t_{Lag} t_{Lag}	— 1/2	1/2 —	t_{SCK} t_{SCK}
4		Clock (SPSCK) high time Master and Slave	t_{SCKH}	$1/2\ t_{SCK} - 25$	—	ns
5		Clock (SPSCK) low time Master and Slave	t_{SCKL}	$1/2\ t_{SCK} - 25$	—	ns
6		Data setup time (inputs) Master Slave	$t_{SI(M)}$ $t_{SI(S)}$	30 30	— —	ns ns
7		Data hold time (inputs) Master Slave	$t_{HI(M)}$ $t_{HI(S)}$	30 30	— —	ns ns
8		Access time, slave[4]	t_A	0	40	ns
9		Disable time, slave[5]	t_{dis}	—	40	ns
10		Data setup time (outputs) Master Slave	t_{SO} t_{SO}	25 25	— —	ns ns
11		Data hold time (outputs) Master Slave	t_{HO} t_{HO}	–10 –10	— —	ns ns

1 Refer to Figure A-15 through Figure A-18.

2 All timing is shown with respect to 20% V_{DD} and 70% V_{DD}, unless noted; 100 pF load on all SPI pins. All timing assumes slew rate control disabled and high drive strength enabled for SPI output pins.

3 Maximum baud rate must be limited to 5 MHz due to pad input characteristics.

4 Time to data active from high-impedance state.

5 Hold time to high-impedance state.

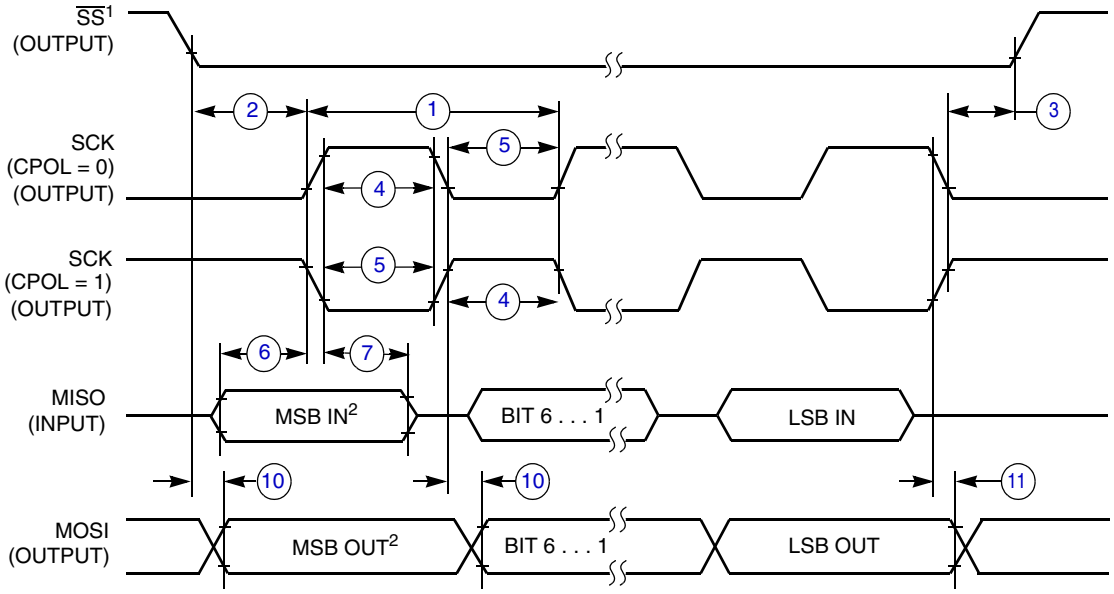

NOTES:
1. $\overline{SS}$ output mode (MODFEN = 1, SSOE = 1).
2. LSBF = 0. For LSBF = 1, bit order is LSB, bit 1, ..., bit 6, MSB.

Figure A-15. SPI Master Timing (CPHA = 0)

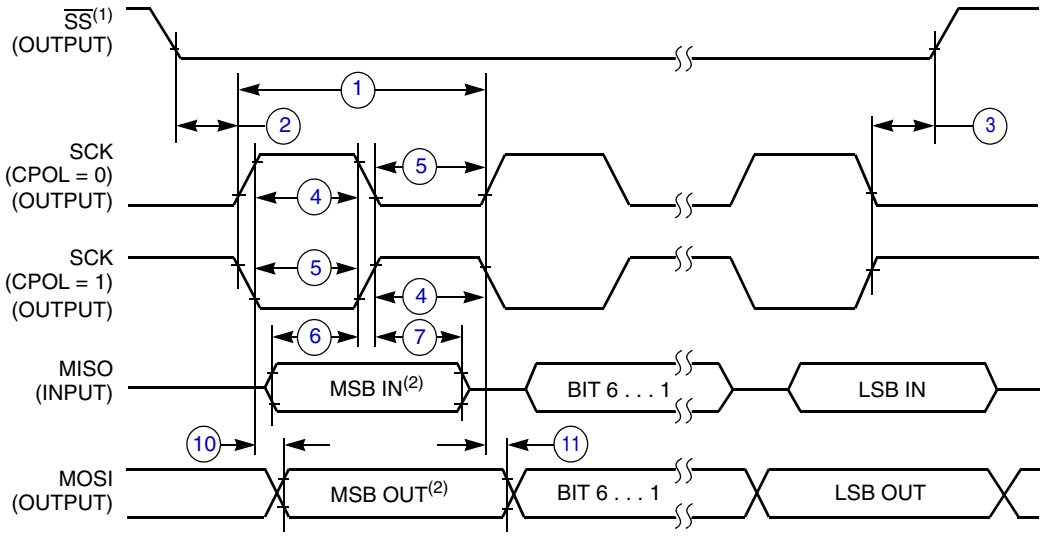

NOTES:
1. $\overline{SS}$ output mode (MODFEN = 1, SSOE = 1).
2. LSBF = 0. For LSBF = 1, bit order is LSB, bit 1, ..., bit 6, MSB.

Figure A-16. SPI Master Timing (CPHA = 1)

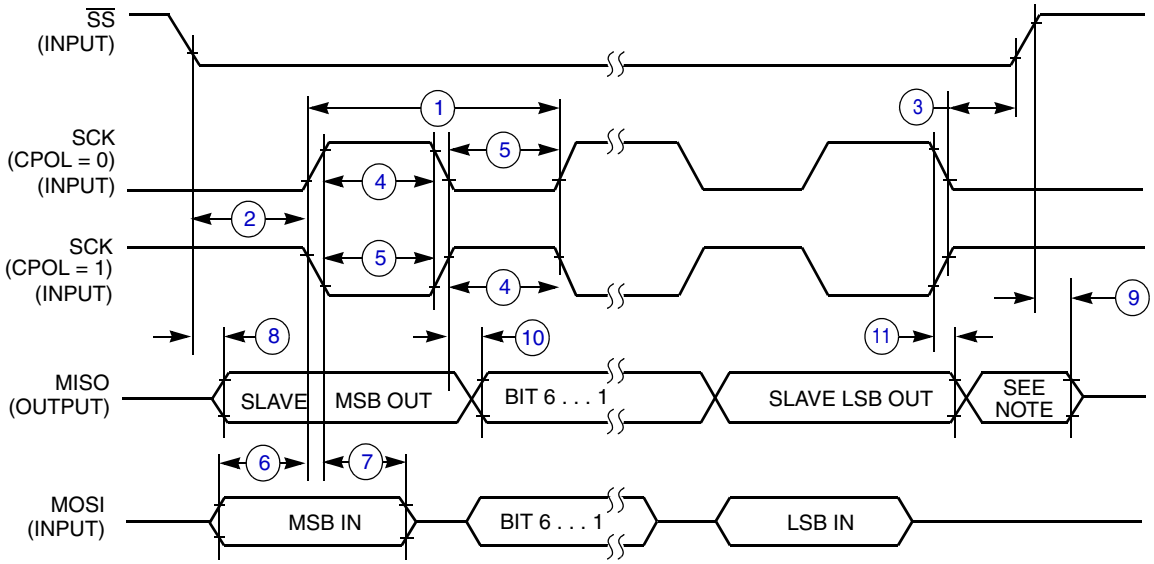

NOTE:

1. Not defined but normally MSB of character just received

Figure A-17. SPI Slave Timing (CPHA = 0)

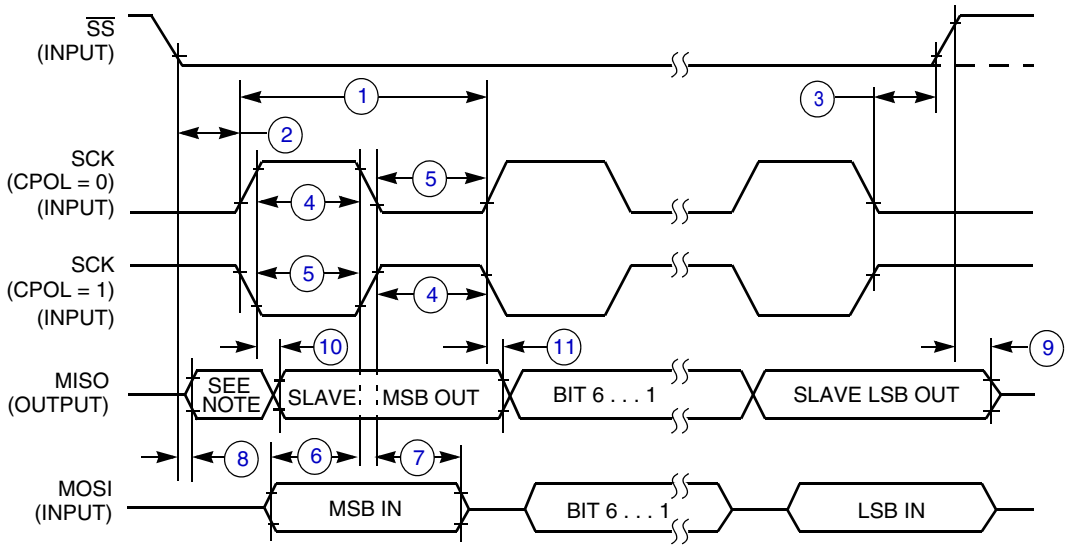

NOTE:

1. Not defined but normally LSB of character just received

Figure A-18. SPI Slave Timing (CPHA = 1)

A.12 FLASH Specifications

This section provides details about program/erase times and program-erase endurance for the FLASH memory.

Program and erase operations do not require any special power sources other than the normal V_{DD} supply. For more detailed information about program/erase operations, see Chapter 4, "Memory."

Table A-15. FLASH Characteristics

Num	C	Characteristic	Symbol	Min	Typ[1]	Max	Unit
1	P	Supply voltage for program/erase	$V_{prog/erase}$	2.7		5.5	V
2	P	Supply voltage for read operation	V_{Read}	2.7		5.5	V
3	P	Internal FCLK frequency[2]	f_{FCLK}	150		200	kHz
4	P	Internal FCLK period (1/FCLK)	t_{Fcyc}	5		6.67	µs
5	P	Byte program time (random location)(2)	t_{prog}	9			t_{Fcyc}
6	C	Byte program time (burst mode)(2)	t_{Burst}	4			t_{Fcyc}
7	P	Page erase time[3]	t_{Page}	4000			t_{Fcyc}
8	P	Mass erase time(2)	t_{Mass}	20,000			t_{Fcyc}
9	C	Program/erase endurance[4] T_L to T_H = –40°C to + 125°C T = 25°C		10,000 —	— 100,000	— —	cyces
10	C	Data retention[5]	t_{D_ret}	15	100	—	years

1 Typical values are based on characterization data at V_{DD} = 5.0 V, 25°C unless otherwise stated.

2 The frequency of this clock is controlled by a software setting.

3 These values are hardware state machine controlled. User code does not need to count cycles. This information supplied for calculating approximate time to program and erase.

4 **Typical endurance for FLASH** was evaluated for this product family on the 9S12Dx64. For additional information on how Freescale Semiconductor defines typical endurance, please refer to Engineering Bulletin EB619/D, *Typical Endurance for Nonvolatile Memory.*

5 **Typical data retention** values are based on intrinsic capability of the technology measured at high temperature and de-rated to 25°C using the Arrhenius equation. For additional information on how Freescale Semiconductor defines typical data retention, please refer to Engineering Bulletin EB618/D, *Typical Data Retention for Nonvolatile Memory.*

A.13 EMC Performance

Electromagnetic compatibility (EMC) performance is highly dependant on the environment in which the MCU resides. Board design and layout, circuit topology choices, location and characteristics of external components as well as MCU software operation all play a significant role in EMC performance. The system designer should consult Freescale applications notes such as AN2321, AN1050, AN1263, AN2764, and AN1259 for advice and guidance specifically targeted at optimizing EMC performance.

A.13.1 Conducted Transient Susceptibility

Microcontroller transient conducted susceptibility is measured in accordance with an internal Freescale test method. The measurement is performed with the microcontroller installed on a custom EMC evaluation board and running specialized EMC test software designed in compliance with the test method. The conducted susceptibility is determined by injecting the transient susceptibility signal on each pin of the microcontroller. The transient waveform and injection methodology is based on IEC 61000-4-4 (EFT/B). The transient voltage required to cause performance degradation on any pin in the tested configuration is greater than or equal to the reported levels unless otherwise indicated by footnotes below the table.

Table A-16. Conducted Transient Susceptibility

Parameter	Symbol	Conditions	f_{OSC}/f_{BUS}	Result	Amplitude[1] (Min)	Unit
Conducted susceptibility, electrical fast transient/burst (EFT/B)	V_{CS_EFT}	V_{DD} = 5.0V T_A = +25°C package type 64 QFP	32.768kHz crystal 2MHz Bus	A	±2.8[2]	kV
				B	±2.8	
				C	±2.8	
				D	±3.8	

1 Data based on qualification test results. Not tested in production.

2 The RESET pin is susceptible to the minimum applied transient of 220V. However, adding the recommended 0.1μF decoupling capacitor should prevent failures below the minimum amplitude.

The susceptibility performance classification is described in Table A-17.

Table A-17. Susceptibility Performance Classification

Result	Performance Criteria	
A	No failure	The MCU performs as designed during and after exposure.
B	Self-recovering failure	The MCU does not perform as designed during exposure. The MCU returns automatically to normal operation after exposure is removed.
C	Soft failure	The MCU does not perform as designed during exposure. The MCU does not return to normal operation until exposure is removed and the RESET pin is asserted.

Table A-17. Susceptibility Performance Classification

Result	Performance Criteria	
D	Hard failure	The MCU does not perform as designed during exposure. The MCU does not return to normal operation until exposure is removed and the power to the MCU is cycled.
E	Damage	The MCU does not perform as designed during and after exposure. The MCU cannot be returned to proper operation due to physical damage or other permanent performance degradation.

Appendix B
Ordering Information and Mechanical Drawings

B.1 Ordering Information

This section contains ordering numbers for MC9S08AC60 Series devices. See below for an example of the device numbering system.

Table B-1. Device Numbering System

Device Number[1]	Memory		Available Packages[2]
	Flash	RAM	Type
MC9S08AC60	63,280	2048	64 LQFP, 64 QFP 48 QFN, 44 LQFP, 32 LQFP
MC9S08AC48	49,152		64 LQFP, 64 QFP 48 QFN, 44 LQFP, 32 LQFP
MC9S08AC32	32,768		64 LQFP, 64 QFP 48 QFN, 44 LQFP, 32 LQFP

1 See Table 1-1 for a complete description of modules included on each device.
2 See Table B-2 for package information.

B.2 Orderable Part Numbering System

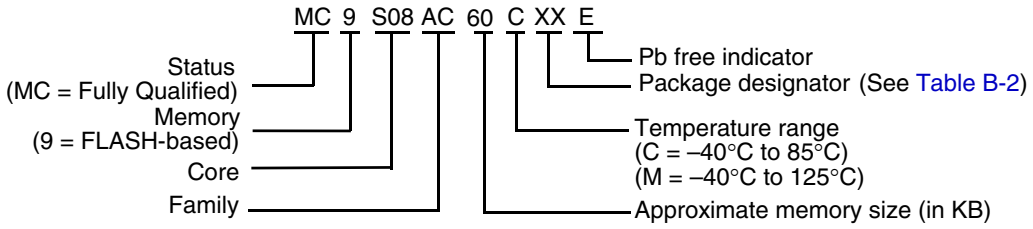

B.3 Mechanical Drawings

This following pages contain mechanical specifications for MC9S08AC60 Series package options. See Table B-2 for the document numbers that correspond to each package type.

Table B-2. Package Information

Pin Count	Type	Designator	Document No.
64	LQFP	PU	98ASS23234W
64	QFP	FU	98ASB42844B
48	QFN	FD	98ARH99048A
44	LQFP	FG	98ASS23225W
32	LQFP	FJ	98ASH70029A

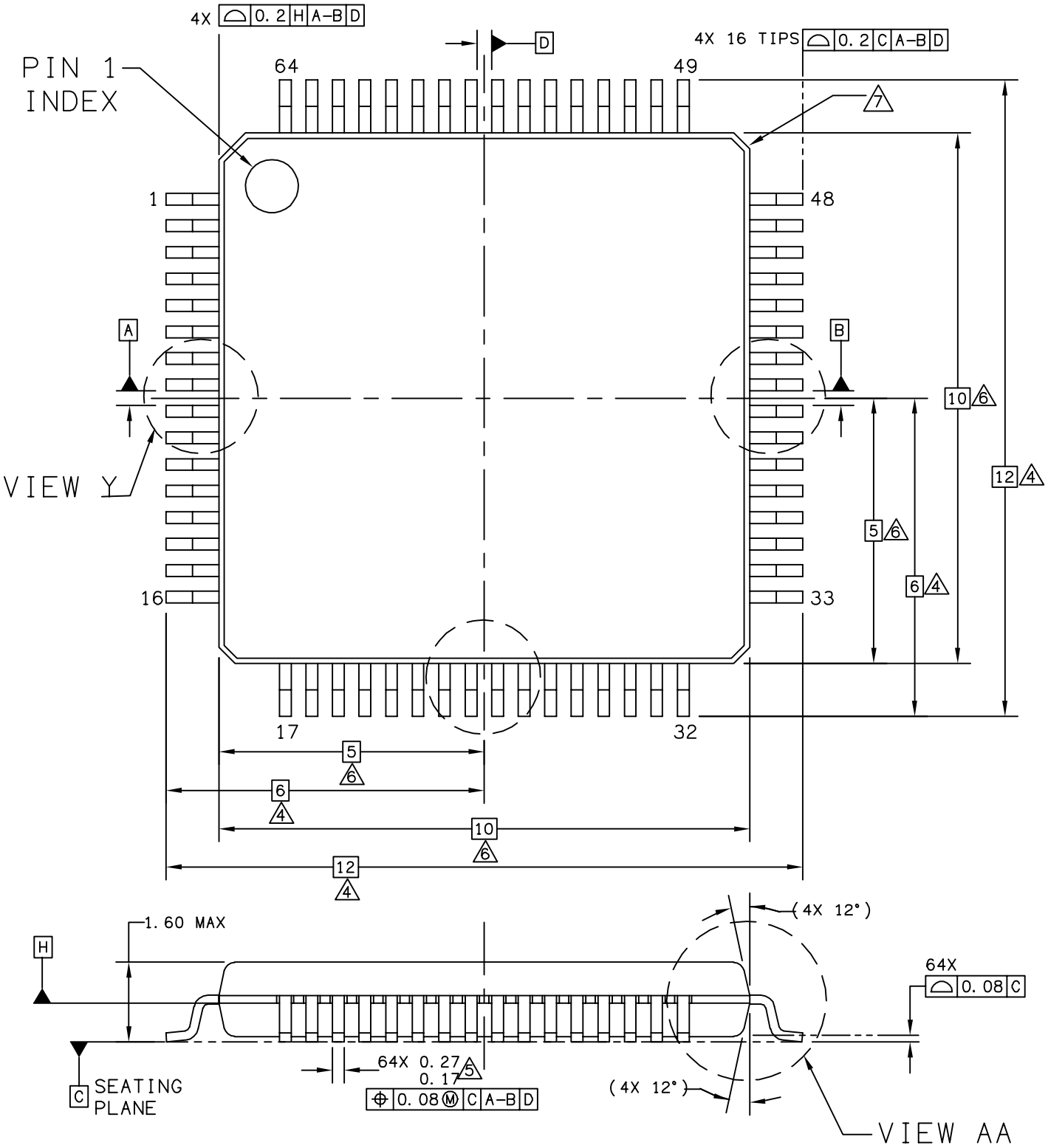

© FREESCALE SEMICONDUCTOR, INC. ALL RIGHTS RESERVED.	**MECHANICAL OUTLINE**	PRINT VERSION NOT TO SCALE
TITLE: 64LD LQFP, 10 X 10 X 1.4 PKG, 0.5 PITCH, CASE OUTLINE	DOCUMENT NO: 98ASS23234W	REV: E
	CASE NUMBER: 840F-02	11 AUG 2006
	STANDARD: JEDEC MS-026 BCD	

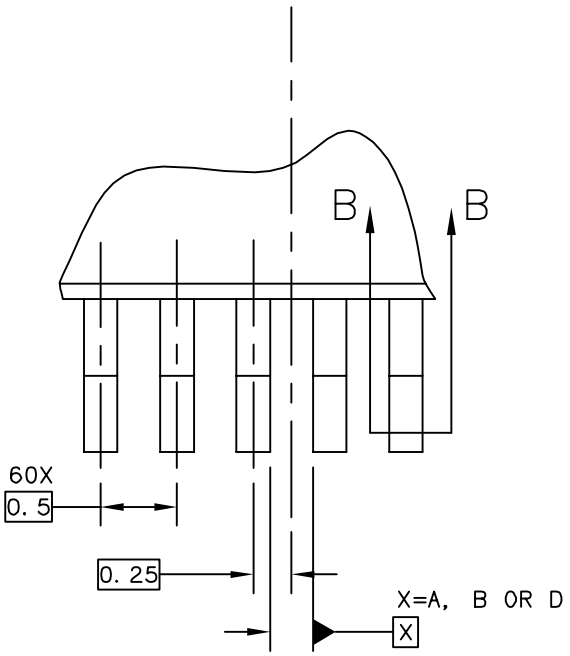

VIEW Y

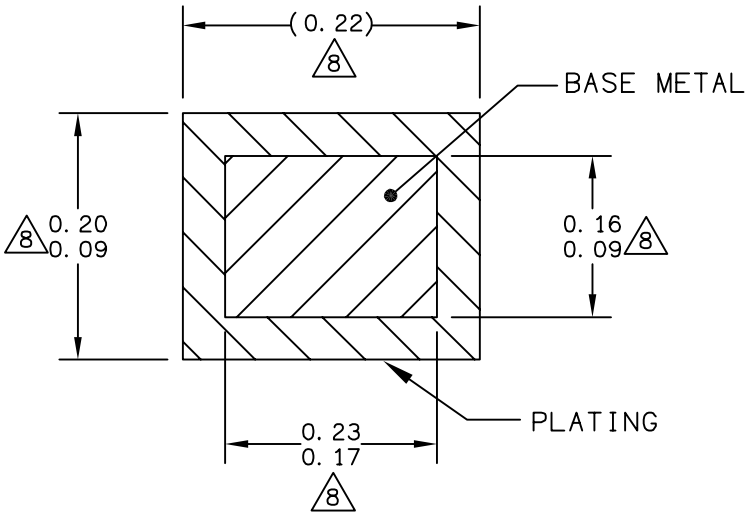

SECTION B–B

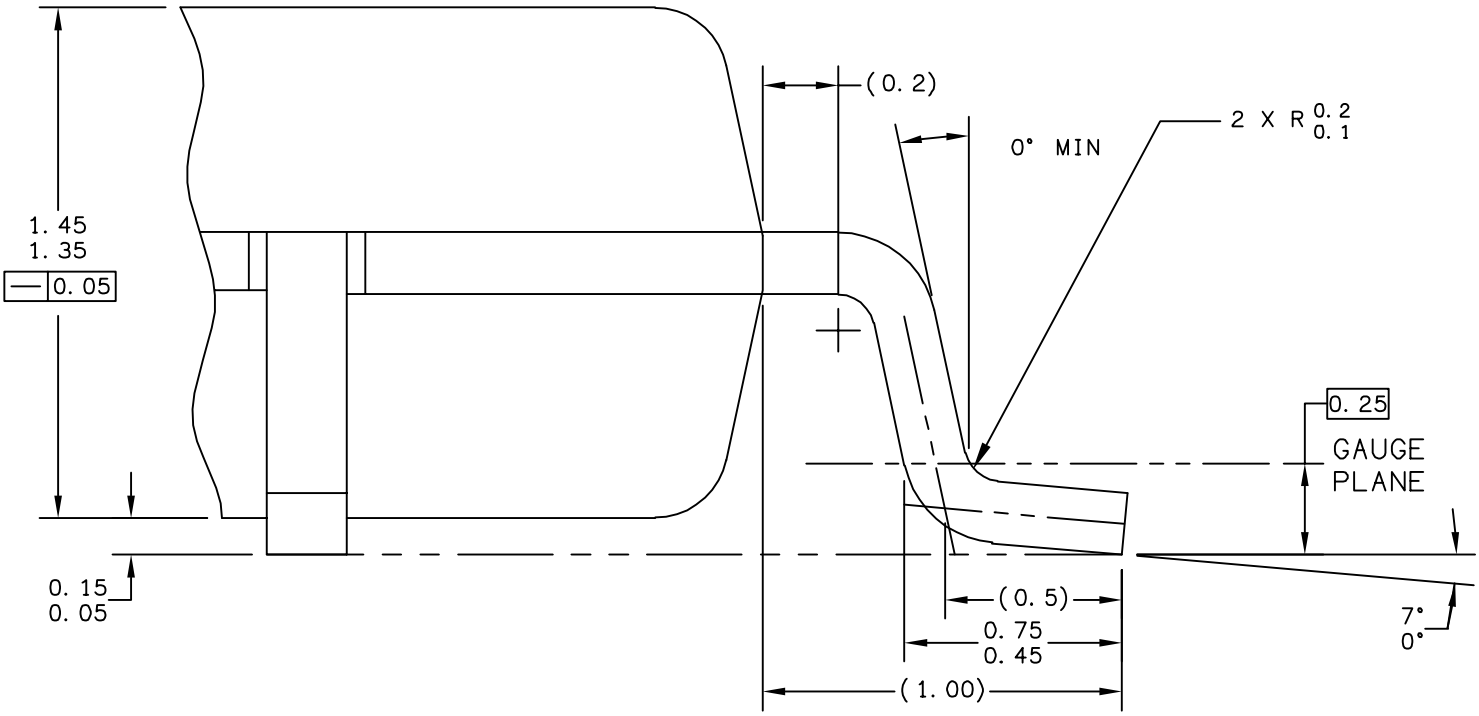

VIEW AA

© FREESCALE SEMICONDUCTOR, INC. ALL RIGHTS RESERVED.	**MECHANICAL OUTLINE**	PRINT VERSION NOT TO SCALE
TITLE: 64LD LQFP, 10 X 10 X 1.4 PKG, 0.5 PITCH, CASE OUTLINE	DOCUMENT NO: 98ASS23234W	REV: E
	CASE NUMBER: 840F-02	11 AUG 2006
	STANDARD: JEDEC MS-026 BCD	

NOTES:

1. DIMENSIONS ARE IN MILLIMETERS.

2. DIMENSIONING AND TOLERANCING PER ASME Y14.5M-1994.

3. DATUMS A, B AND D TO BE DETERMINED AT DATUM PLANE H.

4. DIMENSIONS TO BE DETERMINED AT SEATING PLANE C.

5. THIS DIMENSION DOES NOT INCLUDE DAMBAR PROTRUSION. ALLOWABLE DAMBAR PROTRUSION SHALL NOT CAUSE THE LEAD WIDTH TO EXCEED THE UPPER LIMIT BY MORE THAN 0.08 mm AT MAXIMUM MATERIAL CONDITION. DAMBAR CANNOT BE LOCATED ON THE LOWER RADIUS OR THE FOOT. MINIMUM SPACE BETWEEN PROTRUSION AND ADJACENT LEAD SHALL NOT BE LESS THAN 0.07 mm.

6. THIS DIMENSION DOES NOT INCLUDE MOLD PROTRUSION. ALLOWABLE PROTRUSION IS 0.25 mm PER SIDE. THIS DIMENSION IS MAXIMUM PLASTIC BODY SIZE DIMENSION INCLUDING MOLD MISMATCH.

7. EXACT SHAPE OF EACH CORNER IS OPTIONAL.

8. THESE DIMENSIONS APPLY TO THE FLAT SECTION OF THE LEAD BETWEEN 0.1 mm AND 0.25 mm FROM THE LEAD TIP.

© FREESCALE SEMICONDUCTOR, INC.
ALL RIGHTS RESERVED.

MECHANICAL OUTLINE

PRINT VERSION NOT TO SCALE

TITLE: 64LD LQFP, 10 X 10 X 1.4 PKG, 0.5 PITCH, CASE OUTLINE	DOCUMENT NO: 98ASS23234W	REV: E
	CASE NUMBER: 840F-02	11 AUG 2006
	STANDARD: JEDEC MS-026 BCD	

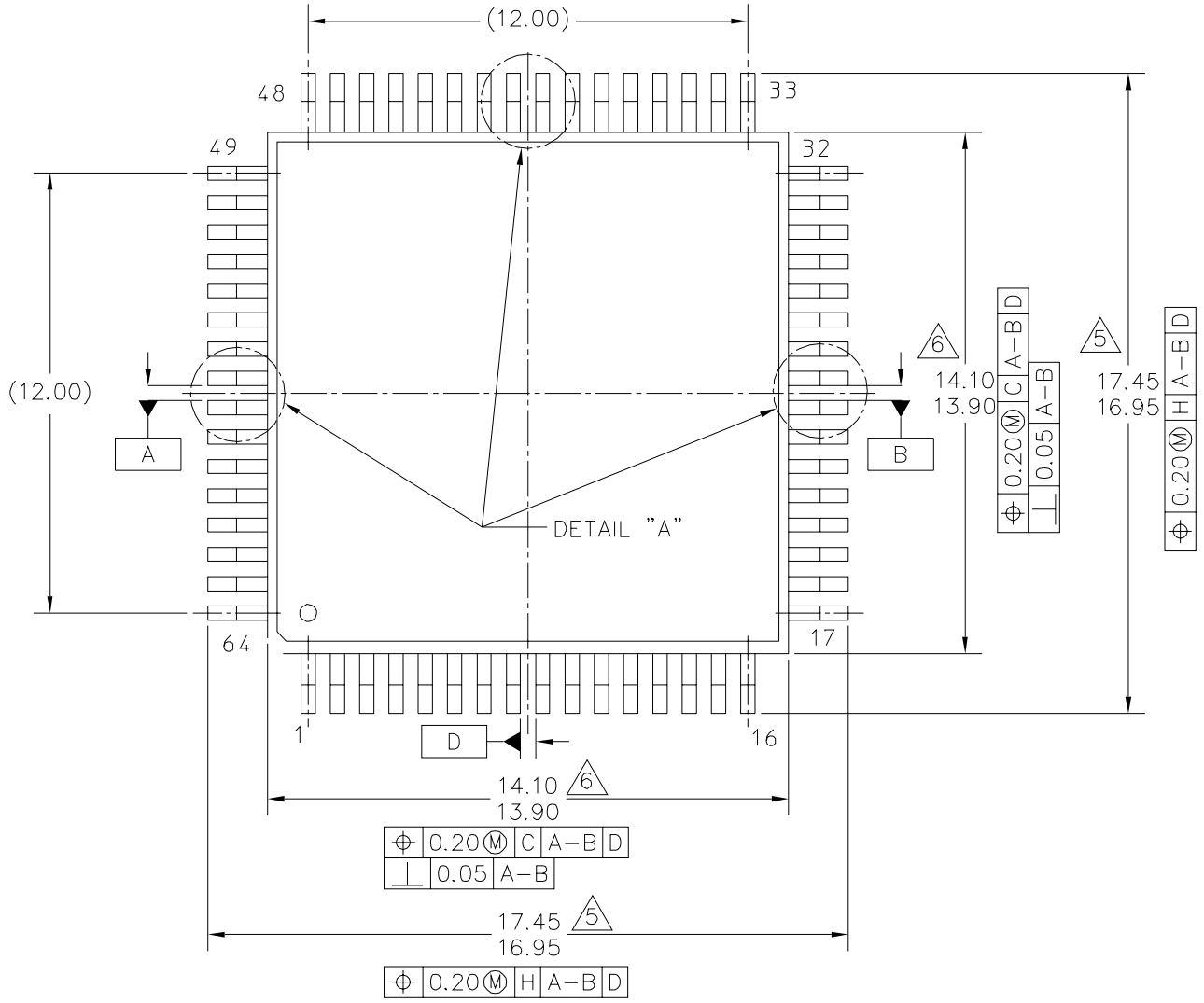

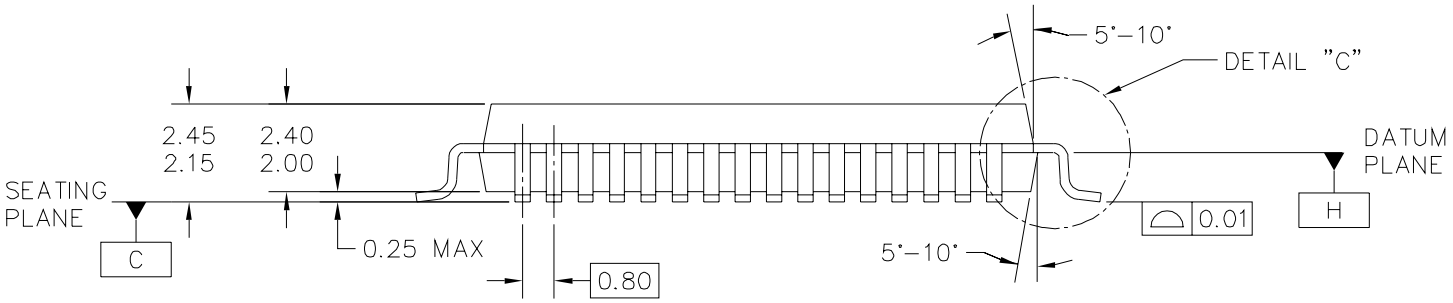

© FREESCALE SEMICONDUCTOR, INC.
ALL RIGHTS RESERVED.

MECHANICAL OUTLINE	PRINT VERSION NOT TO SCALE

TITLE:	DOCUMENT NO: 98ASB42844B	REV: B
64LD QFP (14 X 14)	CASE NUMBER: 840B-01	20 MAY 2005
	STANDARD: NON-JEDEC	

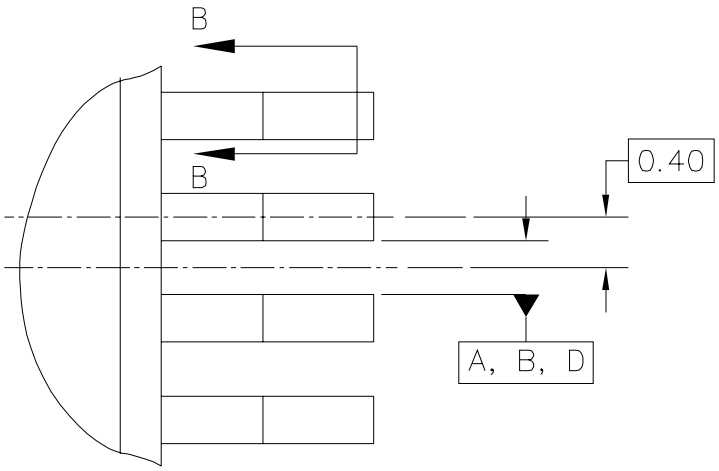

DETAIL "A"

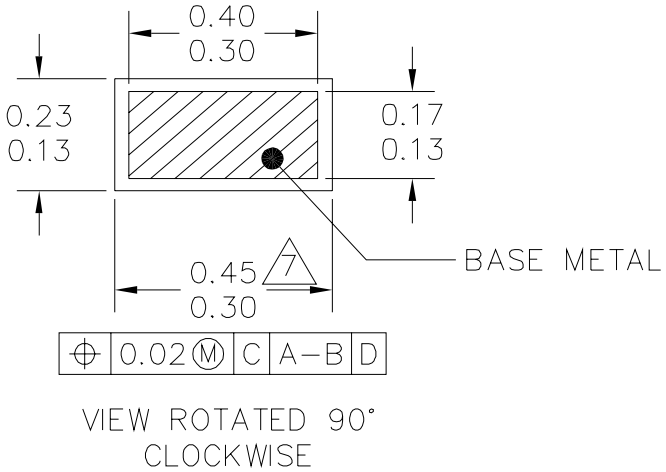

SECTION B–B

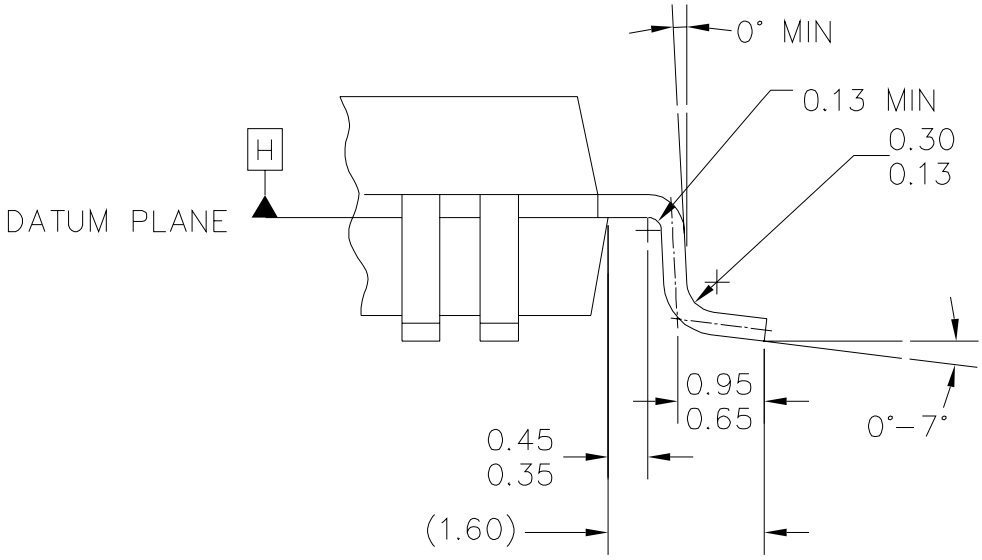

DETAIL "C"

© FREESCALE SEMICONDUCTOR, INC. ALL RIGHTS RESERVED.	MECHANICAL OUTLINE	PRINT VERSION NOT TO SCALE
TITLE: 64LD QFP (14 X 14)	DOCUMENT NO: 98ASB42844B	REV: B
	CASE NUMBER: 840B-01	20 MAY 2005
	STANDARD: NON-JEDEC	

NOTES:

1. DIMENSIONING AND TOLERANCING PER ASME Y14.5M, 1994.

2. CONTROLLING DIMENSION: MILLIMETER.

3. DATUM PLANE -H- IS LOCATED AT BOTTOM OF LEAD AND IS COINCIDENT WITH THE LEAD WHERE THE LEAD EXITS THE PLASTIC BODY AT THE BOTTOM OF THE PARTING LINE.

4. DATUMS A-B AND -D- TO BE DETERMINED AT DATUM PLANE -H-.

5. DIMENSIONS TO BE DETERMINED AT SEATING PLANE -C-.

6. DIMENSIONS DO NOT INCLUDE MOLD PROTRUSION. ALLOWABLE PROTRUSION IS 0.25mm PER SIDE. DIMENSIONS DO INCLUDE MOLD MISMATCH AND ARE DETERMINED AT DATUM PLANE -H-.

7. DIMENSION DOES NOT INCLUDE DAMBAR PROTRUSION. ALLOWABLE DAMBAR PROTRUSION SHALL BE 0.08mm TOTAL IN EXCESS OF THE DIMENSION AT MAXIMUM MATERIAL CONDICTION. DAMBAR CANNOT BE LOCATED ON THE LOWER RADIUS OR THE FOOT.

© FREESCALE SEMICONDUCTOR, INC.
ALL RIGHTS RESERVED.

MECHANICAL OUTLINE	PRINT VERSION NOT TO SCALE	
TITLE: 64LD QFP (14 X 14)	DOCUMENT NO: 98ASB42844B	REV: B
	CASE NUMBER: 840B-01	20 MAY 2005
	STANDARD: NON-JEDEC	

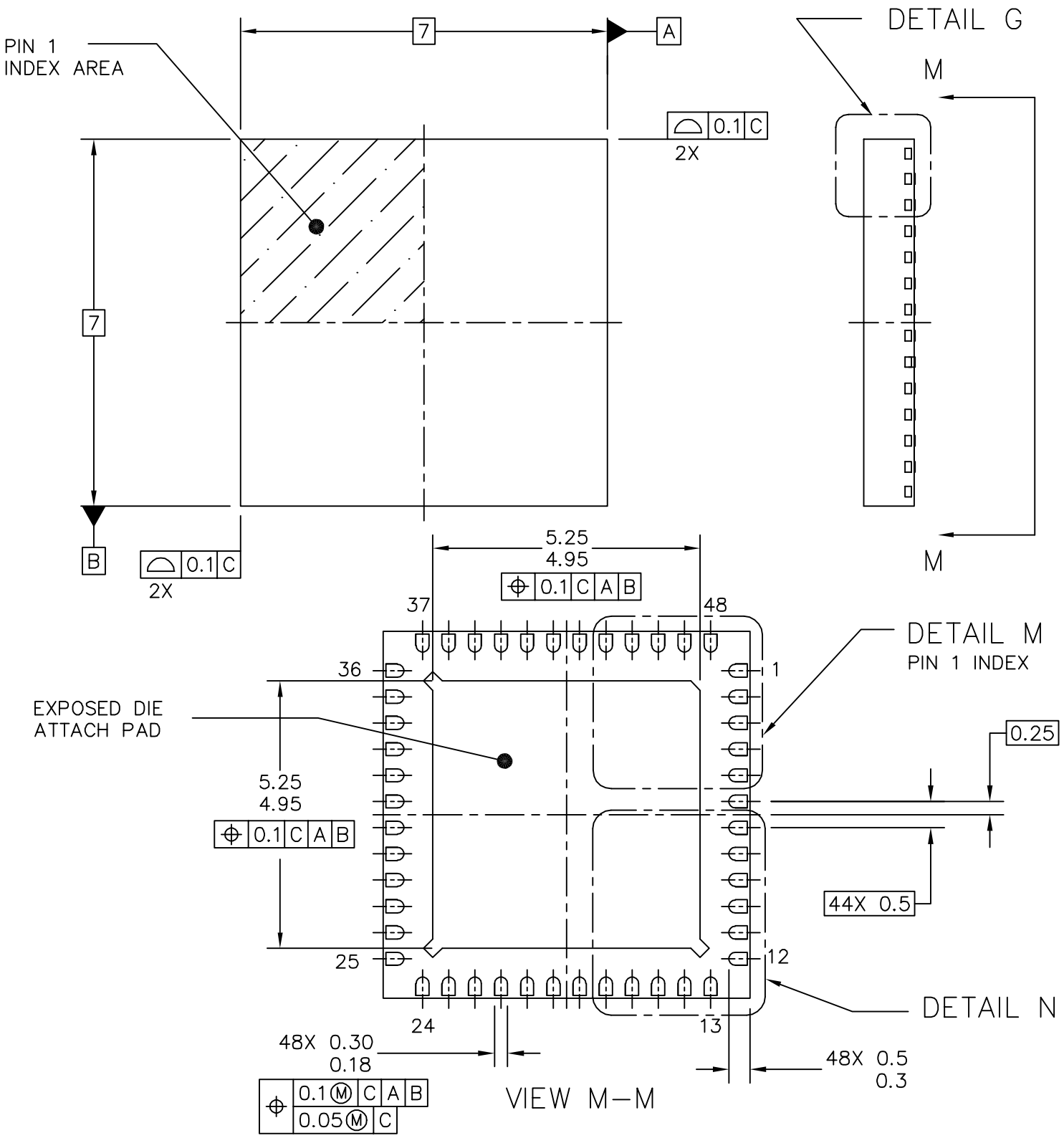

© FREESCALE SEMICONDUCTOR, INC. ALL RIGHTS RESERVED.	**MECHANICAL OUTLINE**	PRINT VERSION NOT TO SCALE
TITLE: THERMALLY ENHANCED QUAD FLAT NON–LEADED PACKAGE (QFN) 48 TERMINAL, 0.5 PITCH (7 X 7 X 1)	DOCUMENT NO: 98ARH99048A	REV: F
	CASE NUMBER: 1314–05	05 DEC 2005
	STANDARD: JEDEC–MO–220 VKKD–2	

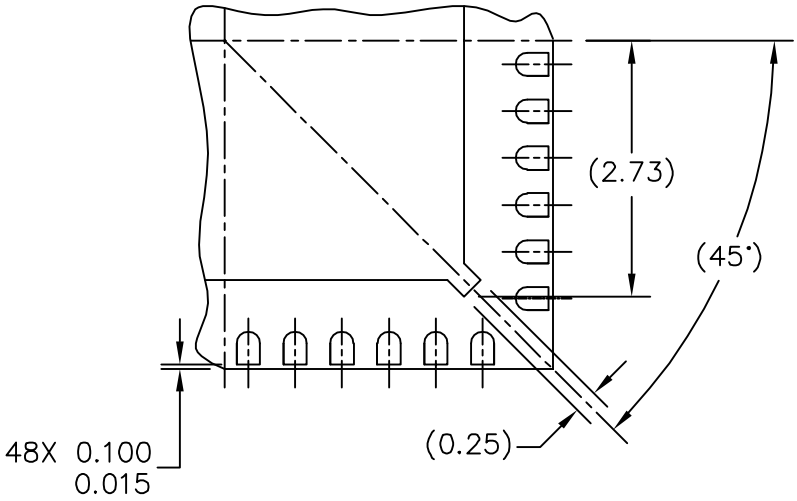

DETAIL N
PREFERRED CORNER CONFIGURATION

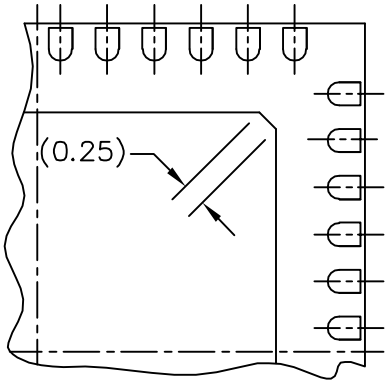

DETAIL M
PREFERED PIN 1 BACKSIDE IDENTIFIER

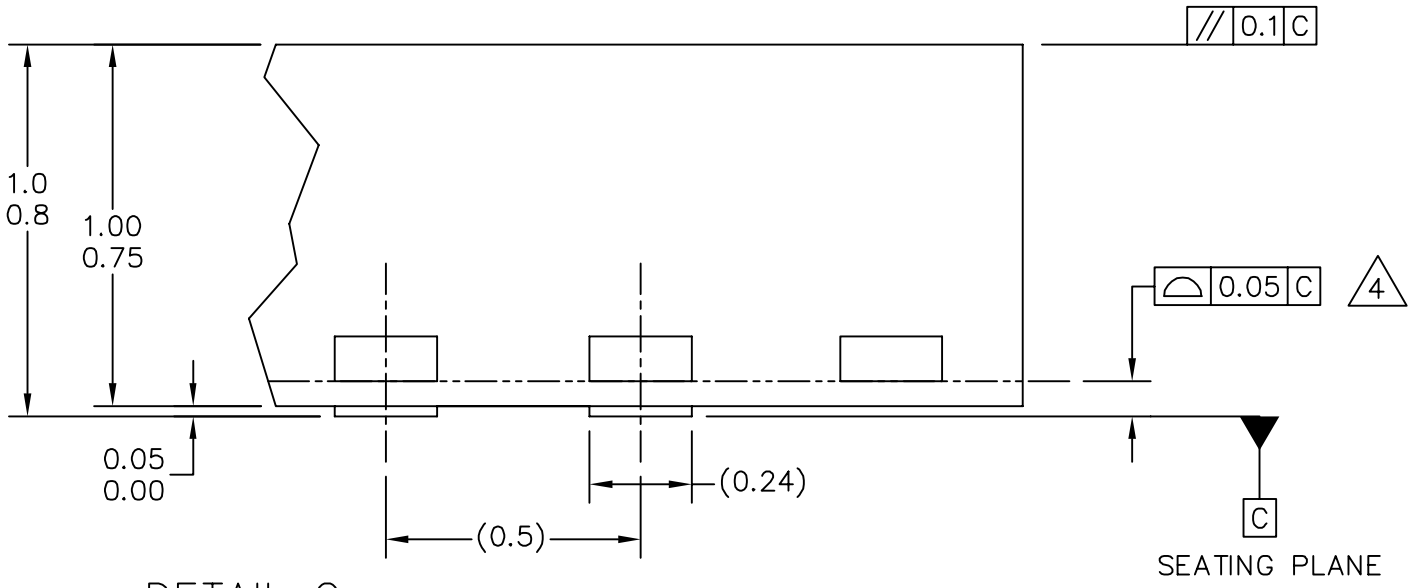

DETAIL G
VIEW ROTATED 90° CW

© FREESCALE SEMICONDUCTOR, INC. ALL RIGHTS RESERVED.	**MECHANICAL OUTLINE**	PRINT VERSION NOT TO SCALE
TITLE: THERMALLY ENHANCED QUAD FLAT NON-LEADED PACKAGE (QFN) 48 TERMINAL, 0.5 PITCH (7 X 7 X 1)	DOCUMENT NO: 98ARH99048A	REV: F
	CASE NUMBER: 1314-05	05 DEC 2005
	STANDARD: JEDEC-MO-220 VKKD-2	

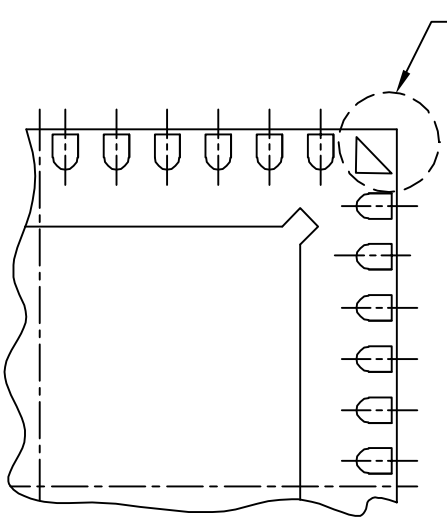

DETAIL M
PIN 1 BACKSIDE IDENTIFIER OPTION

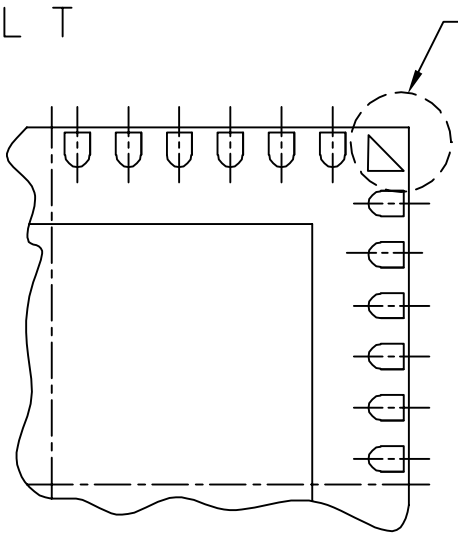

DETAIL M
PIN 1 BACKSIDE IDENTIFIER OPTION

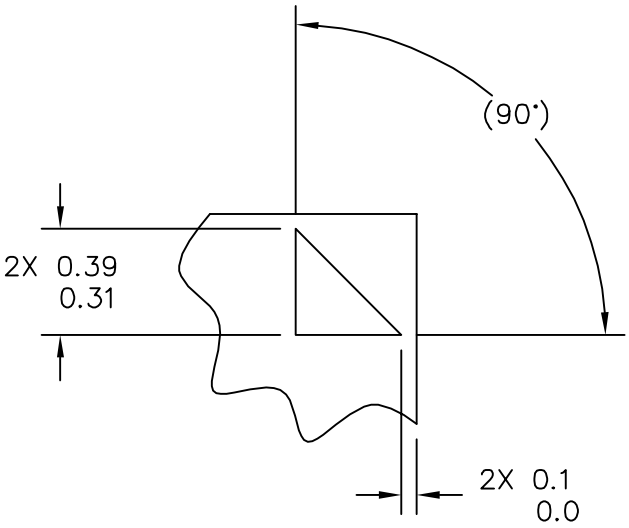

DETAIL T

© FREESCALE SEMICONDUCTOR, INC. ALL RIGHTS RESERVED.	**MECHANICAL OUTLINE**	PRINT VERSION NOT TO SCALE
TITLE: THERMALLY ENHANCED QUAD FLAT NON-LEADED PACKAGE (QFN) 48 TERMINAL, 0.5 PITCH (7 X 7 X 1)	DOCUMENT NO: 98ARH99048A	REV: F
	CASE NUMBER: 1314-05	05 DEC 2005
	STANDARD: JEDEC-MO-220 VKKD-2	

NOTES:

1. DIMENSIONS ARE IN MILLIMETERS.
2. INTERPRET DIMENSIONS AND TOLERANCES PER ASME Y14.5M–1994.
3. THE COMPLETE JEDEC DESIGNATOR FOR THIS PACKAGE IS: HF–PQFN.
4. COPLANARITY APPLIES TO LEADS, CORNER LEADS, AND DIE ATTACH PAD.
5. MIN METAL GAP SHOULD BE 0.2MM.

© FREESCALE SEMICONDUCTOR, INC.
ALL RIGHTS RESERVED.

MECHANICAL OUTLINE

PRINT VERSION NOT TO SCALE

TITLE: THERMALLY ENHANCED QUAD FLAT NON–LEADED PACKAGE (QFN) 48 TERMINAL, 0.5 PITCH (7 X 7 X 1)	DOCUMENT NO: 98ARH99048A	REV: F
	CASE NUMBER: 1314–05	05 DEC 2005
	STANDARD: JEDEC–MO–220 VKKD–2	

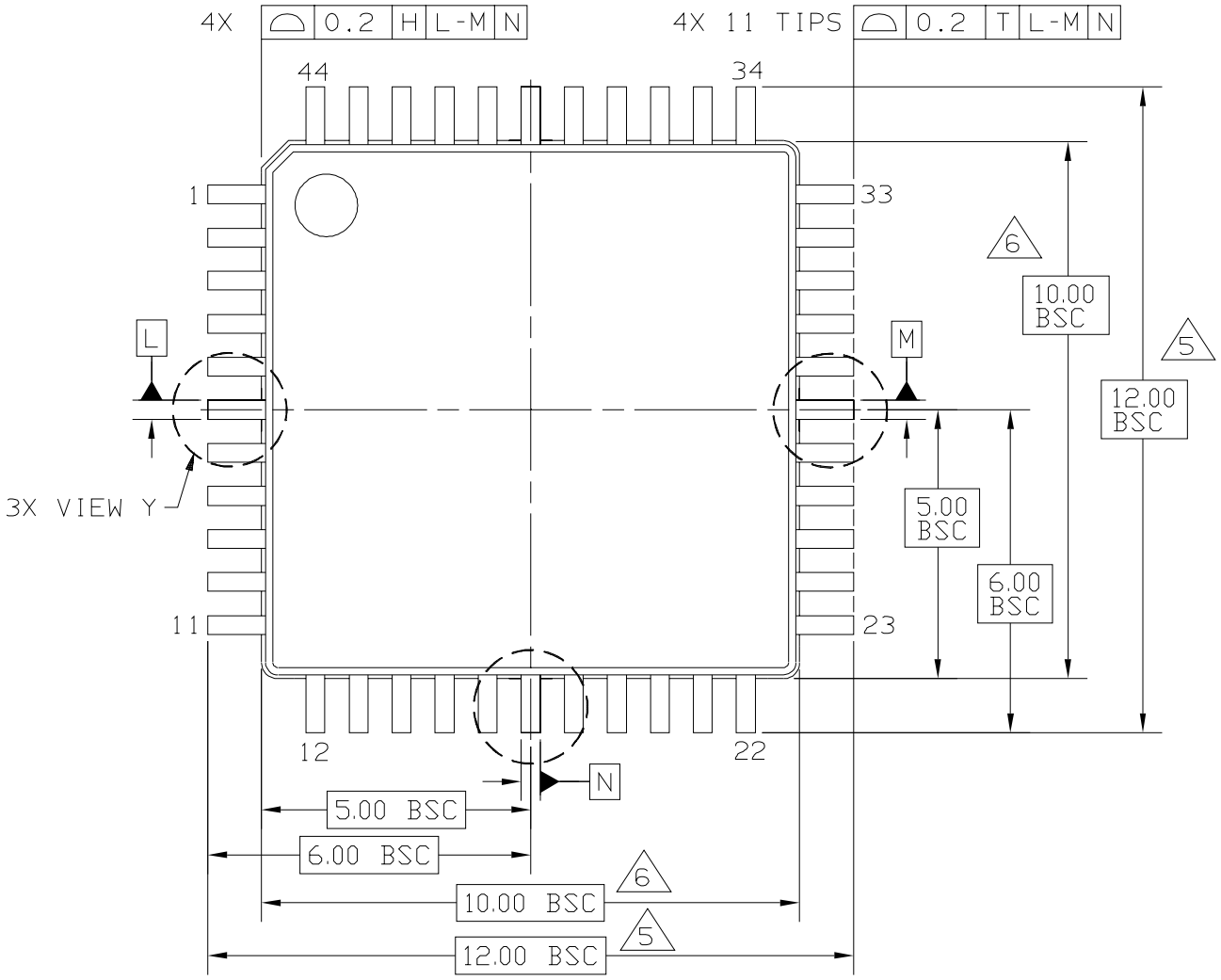

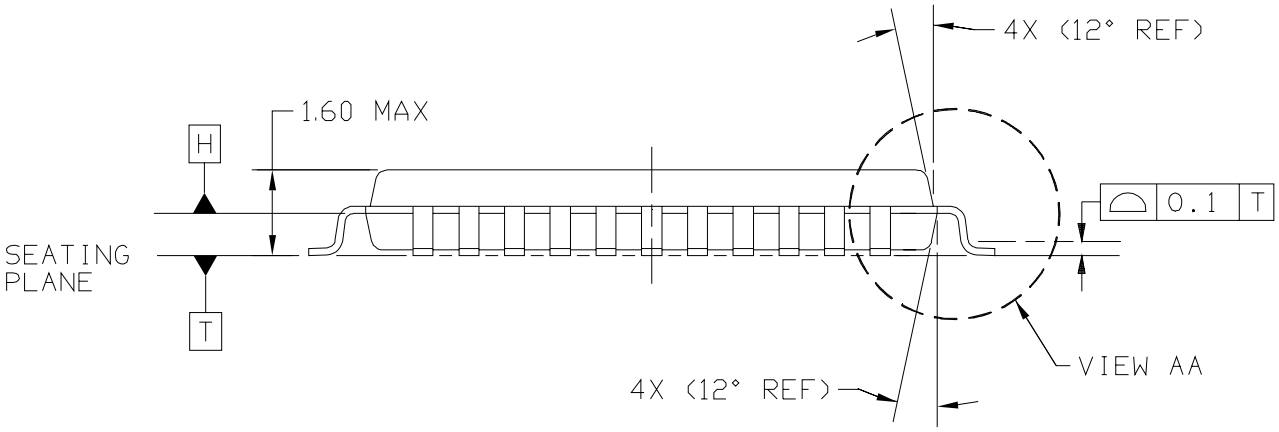

© FREESCALE SEMICONDUCTOR, INC. ALL RIGHTS RESERVED.	MECHANICAL OUTLINE	PRINT VERSION NOT TO SCALE
TITLE: 44 LD LQFP, 10 X 10 PKG, 0.8 PITCH, 1.4 THICK	DOCUMENT NO: 98ASS23225W	REV: D
	CASE NUMBER: 824D-02	26 FEB 2007
	STANDARD: JEDEC MS-026-BCB	

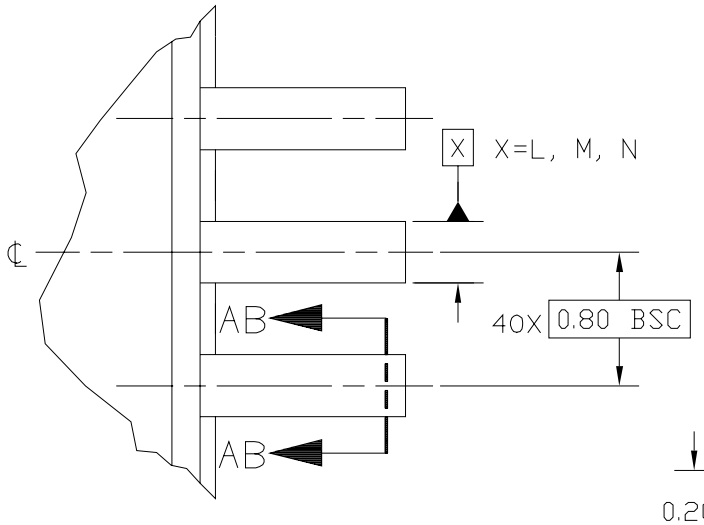

VIEW Y

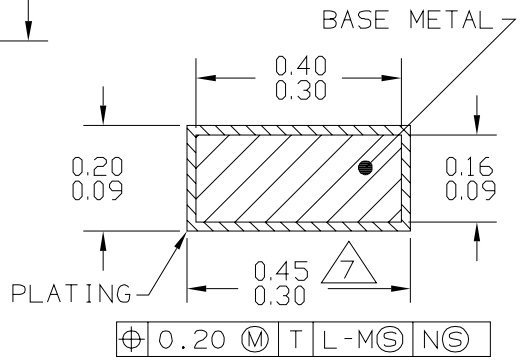

SECTION AB-AB
ROTATED 90° CLOCKWISE

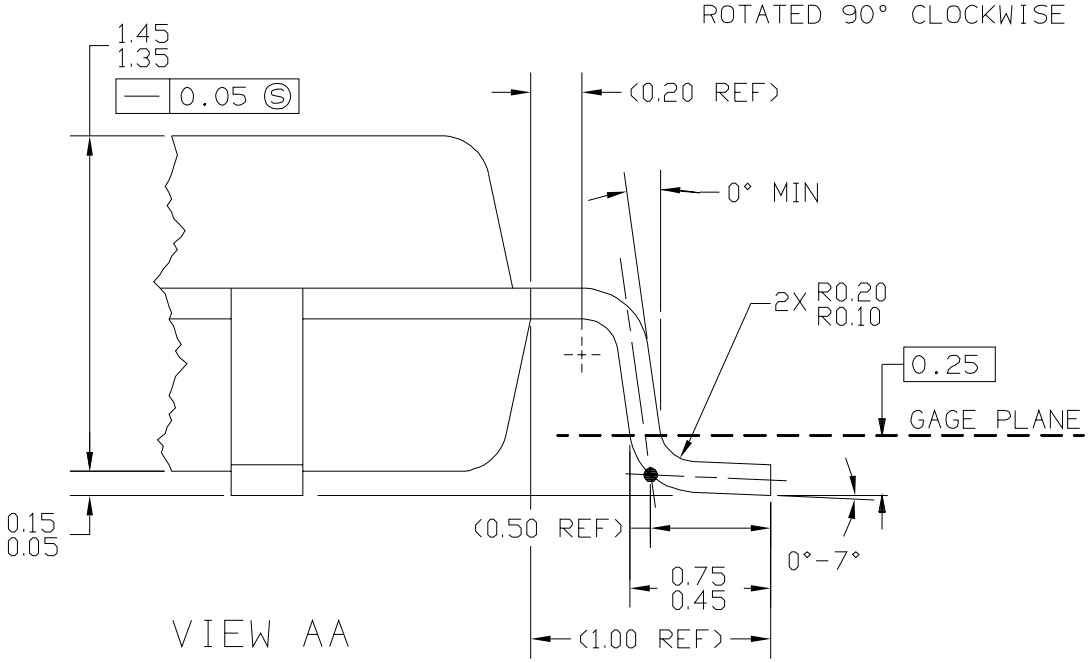

VIEW AA

© FREESCALE SEMICONDUCTOR, INC. ALL RIGHTS RESERVED.	MECHANICAL OUTLINE	PRINT VERSION NOT TO SCALE
TITLE: 44 LD LQFP, 10 X 10 PKG, 0.8 PITCH, 1.4 THICK	DOCUMENT NO: 98ASS23225W	REV: D
	CASE NUMBER: 824D-02	26 FEB 2007
	STANDARD: JEDEC MS-026 BCB	

NOTES:

1. DIMENSIONS AND TOLERANCING PER ASME Y14.5M-1994.

2. CONTROLLING DIMENSION: MILLIMETER

3. DATUM PLANE H IS LOCATED AT BOTTOM OF LEAD AND IS COINCIDENT WITH THE LEAD WHERE THE LEAD EXITS THE PLASTIC BODY AT THE BOTTOM OF THE PARTING LINE.

4. DATUMS L, M AND N TO BE DETERMINED AT DATUM PLANE H.

5. DIMENSIONS TO BE DETERMINED AT SEATING PLANE T.

6. DIMENSIONS DO NOT INCLUDE MOLD PROTRUSION. ALLOWABLE PROTRUSION IS 0.25 PER SIDE. DIMENSIONS DO INCLUDE MOLD MISMATCH AND ARE DETERMINED AT DATUM PLANE H.

7. DIMENSION DOES NOT INCLUDE DAMBAR PROTRUSION. DAMBAR PROTRUSION SHALL NOT CAUSE THE DIMENSION TO EXCEED 0.53. MINIMUM SPACE BETWEEN PROTRUSION AND ADJACENT LEAD OR PROTRUSION 0.07.

© FREESCALE SEMICONDUCTOR, INC. ALL RIGHTS RESERVED.	MECHANICAL OUTLINE	PRINT VERSION NOT TO SCALE
TITLE: 44 LD LQFP, 10 X 10 PKG, 0.8 PITCH, 1.4 THICK	DOCUMENT NO: 98ASS23225W	REV: D
	CASE NUMBER: 824D-02	26 FEB 2007
	STANDARD: JEDEC MS-026 BCB	

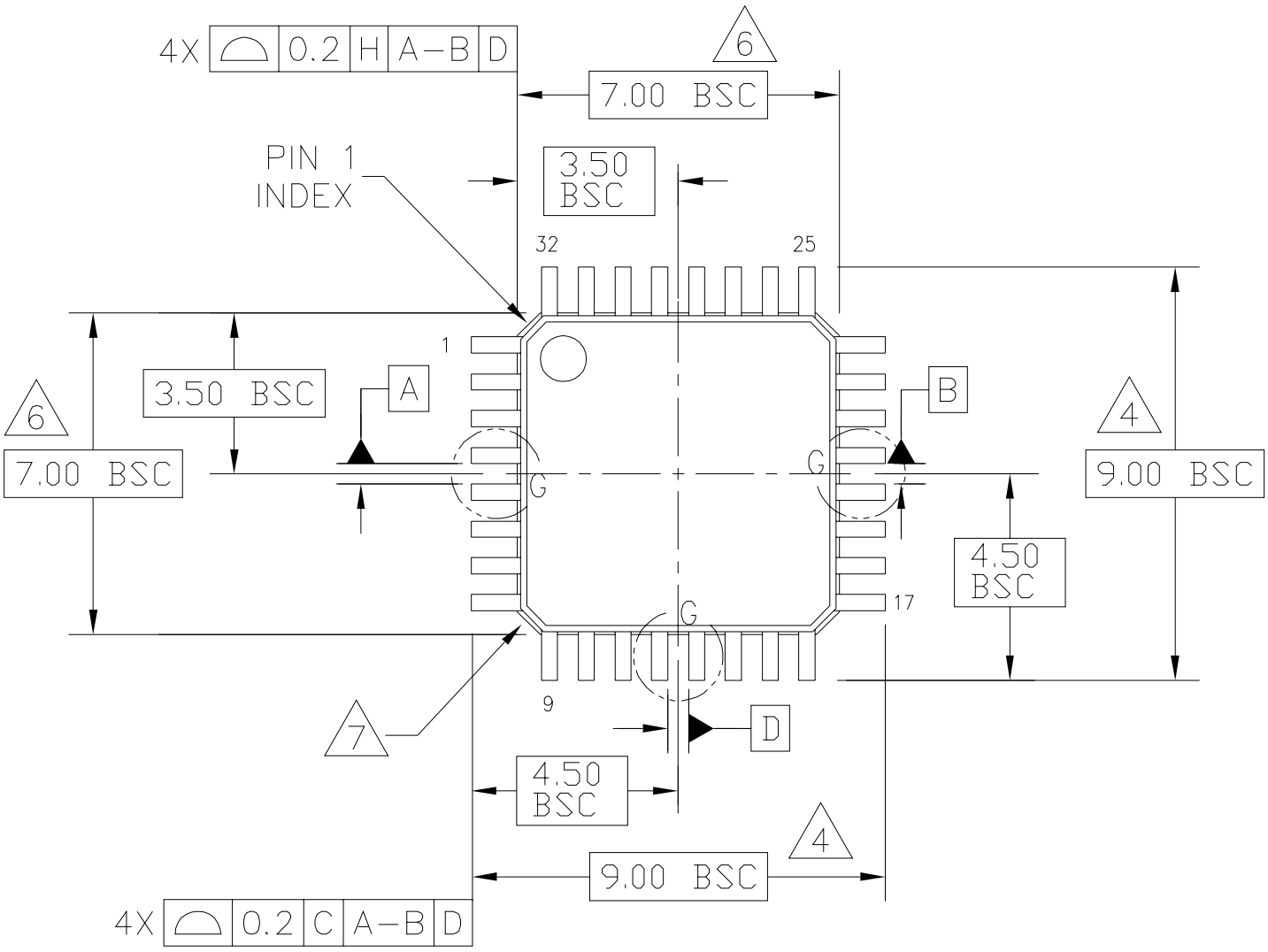

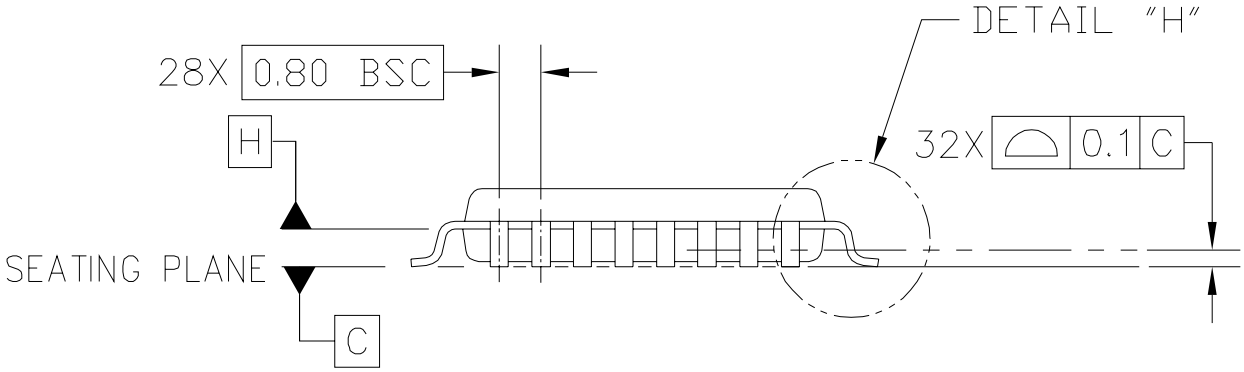

© FREESCALE SEMICONDUCTOR, INC. ALL RIGHTS RESERVED.	MECHANICAL OUTLINE	PRINT VERSION NOT TO SCALE
TITLE: LOW PROFILE QUAD FLAT PACK (LQFP) 32 LEAD, 0.8 PITCH (7 X 7 X 1.4)	DOCUMENT NO: 98ASH70029A	REV: D
	CASE NUMBER: 873A-03	19 MAY 2005
	STANDARD: JEDEC MS-026 BBA	

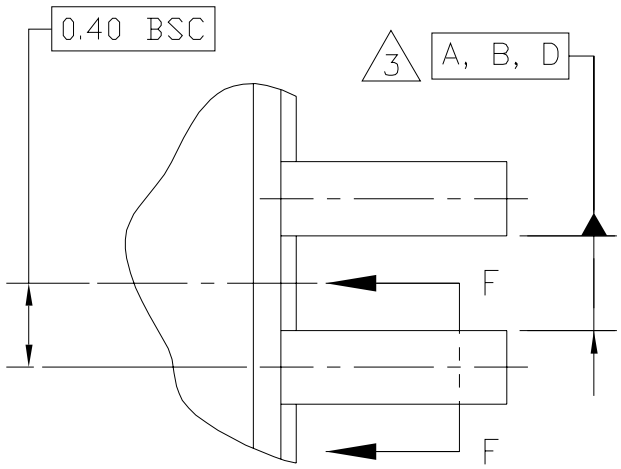

DETAIL G

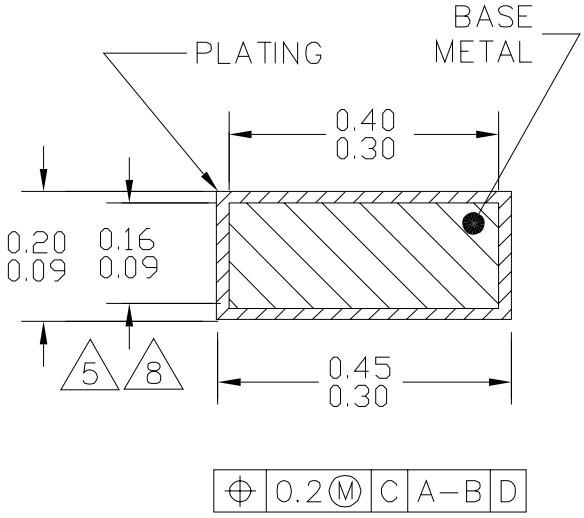

SECTION F–F
ROTATED 90°CW
32 PLACES

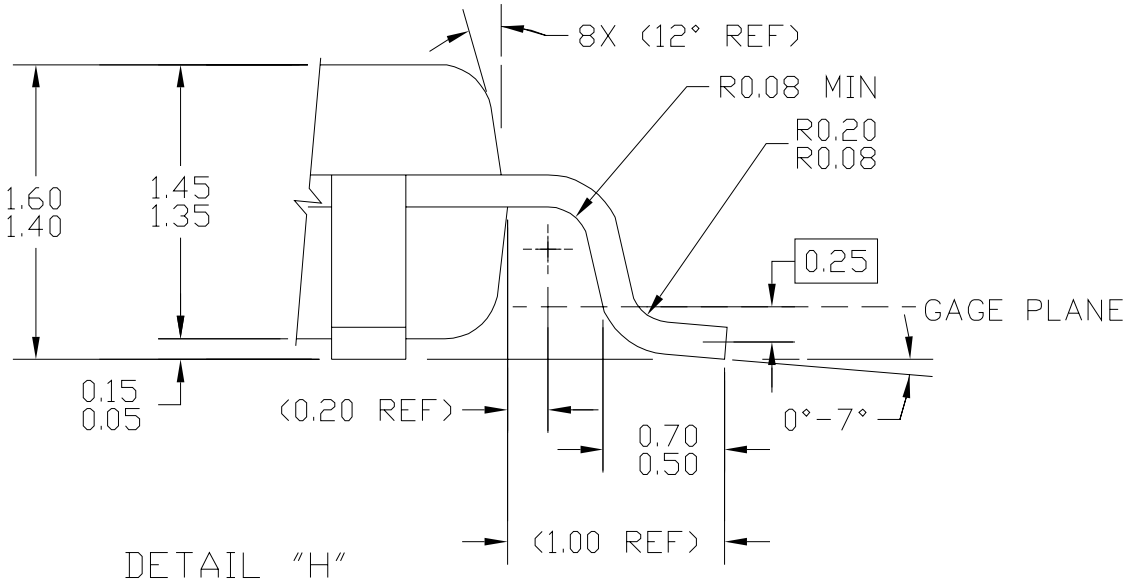

DETAIL "H"

© FREESCALE SEMICONDUCTOR, INC. ALL RIGHTS RESERVED.	MECHANICAL OUTLINE	PRINT VERSION NOT TO SCALE
TITLE: LOW PROFILE QUAD FLAT PACK (LQFP) 32 LEAD, 0.8 PITCH (7 X 7 X 1.4)	DOCUMENT NO: 98ASH70029A	REV: D
	CASE NUMBER: 873A-03	19 MAY 2005
	STANDARD: JEDEC MS-026 BBA	

NOTES:

1. DIMENSIONS ARE IN MILLIMETERS.

2. INTERPRET DIMENSIONS AND TOLERANCES PER ASME Y14.5–1994.

3. DATUMS A, B, AND D TO BE DETERMINED AT DATUM PLANE H.

4. DIMENSIONS TO BE DETERMINED AT SEATING PLANE DATUM C.

5. DIMENSION DOES NOT INCLUDE DAMBAR PROTRUSION. ALLOWABLE DAMBAR PROTRUSION SHALL NOT CAUSE THE LEAD WIDTH TO EXCEED THE MAXIMUM DIMENSION BY MORE THAN 0.08 MM. DAMBAR CANNOT BE LOCATED ON THE LOWER RADIUS OR THE FOOT. MINIMUM SPACE BETWEEN PROTRUSION AND ADJACENT LEAD OR PROTRUSION: 0.07 MM.

6. DIMENSIONS DO NOT INCLUDE MOLD PROTRUSION. ALLOWABLE PROTRUSION IS 0.25 MM PER SIDE. DIMENSIONS ARE MAXIMUM PLASTIC BODY SIZE DIMENSIONS INCLUDING MOLD MISMATCH.

7. EXACT SHAPE OF EACH CORNER IS OPTIONAL.

8. THESE DIMENSIONS APPLY TO THE FLAT SECTION OF THE LEAD BETWEEN 0.1 MM AND 0.25 MM FROM THE LEAD TIP.

© FREESCALE SEMICONDUCTOR, INC.
ALL RIGHTS RESERVED.

MECHANICAL OUTLINE	PRINT VERSION NOT TO SCALE

TITLE:	DOCUMENT NO: 98ASH70029A	REV: D
LOW PROFILE QUAD FLAT PACK (LQFP) 32 LEAD, 0.8 PITCH (7 X 7 X 1.4)	CASE NUMBER: 873A-03	19 MAY 2005
	STANDARD: JEDEC MS-026 BBA	

How to Reach Us:

Home Page:
www.freescale.com

Web Support:
http://www.freescale.com/support

USA/Europe or Locations Not Listed:
Freescale Semiconductor, Inc.
Technical Information Center, EL516
2100 East Elliot Road
Tempe, Arizona 85284
1-800-521-6274 or +1-480-768-2130
www.freescale.com/support

Europe, Middle East, and Africa:
Freescale Halbleiter Deutschland GmbH
Technical Information Center
Schatzbogen 7
81829 Muenchen, Germany
+44 1296 380 456 (English)
+46 8 52200080 (English)
+49 89 92103 559 (German)
+33 1 69 35 48 48 (French)
www.freescale.com/support

Japan:
Freescale Semiconductor Japan Ltd.
Headquarters
ARCO Tower 15F
1-8-1, Shimo-Meguro, Meguro-ku,
Tokyo 153-0064
Japan
0120 191014 or +81 3 5437 9125
support.japan@freescale.com

Asia/Pacific:
Freescale Semiconductor China Ltd.
Exchange Building 23F
No. 118 Jianguo Road
Chaoyang District
Beijing 100022
China
+86 10 5879 8000
support.asia@freescale.com

For Literature Requests Only:
Freescale Semiconductor Literature Distribution Center
P.O. Box 5405
Denver, Colorado 80217
1-800-441-2447 or +1-303-675-2140
Fax: +1-303-675-2150
LDCForFreescaleSemiconductor@hibbertgroup.com

Information in this document is provided solely to enable system and software implementers to use Freescale Semiconductor products. There are no express or implied copyright licenses granted hereunder to design or fabricate any integrated circuits or integrated circuits based on the information in this document.

Freescale Semiconductor reserves the right to make changes without further notice to any products herein. Freescale Semiconductor makes no warranty, representation or guarantee regarding the suitability of its products for any particular purpose, nor does Freescale Semiconductor assume any liability arising out of the application or use of any product or circuit, and specifically disclaims any and all liability, including without limitation consequential or incidental damages. "Typical" parameters that may be provided in Freescale Semiconductor data sheets and/or specifications can and do vary in different applications and actual performance may vary over time. All operating parameters, including "Typicals", must be validated for each customer application by customer's technical experts. Freescale Semiconductor does not convey any license under its patent rights nor the rights of others. Freescale Semiconductor products are not designed, intended, or authorized for use as components in systems intended for surgical implant into the body, or other applications intended to support or sustain life, or for any other application in which the failure of the Freescale Semiconductor product could create a situation where personal injury or death may occur. Should Buyer purchase or use Freescale Semiconductor products for any such unintended or unauthorized application, Buyer shall indemnify and hold Freescale Semiconductor and its officers, employees, subsidiaries, affiliates, and distributors harmless against all claims, costs, damages, and expenses, and reasonable attorney fees arising out of, directly or indirectly, any claim of personal injury or death associated with such unintended or unauthorized use, even if such claim alleges that Freescale Semiconductor was negligent regarding the design or manufacture of the part.

RoHS-compliant and/or Pb-free versions of Freescale products have the functionality and electrical characteristics as their non-RoHS-compliant and/or non-Pb-free counterparts. For further information, see http://www.freescale.com or contact your Freescale sales representative.

For information on Freescale's Environmental Products program, go to http://www.freescale.com/epp.

Freescale™ and the Freescale logo are trademarks of Freescale Semiconductor, Inc. All other product or service names are the property of their respective owners.

© Freescale Semiconductor, Inc. 2008-2011. All rights reserved.

MC9S08AC60
Rev. 3, 8/2011

freescale™
semiconductor