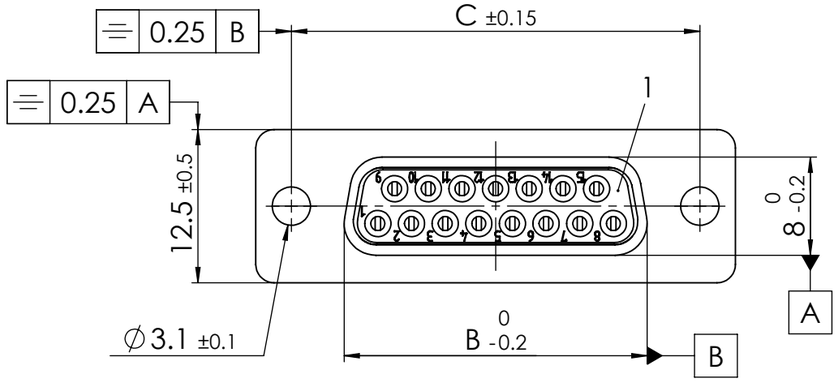

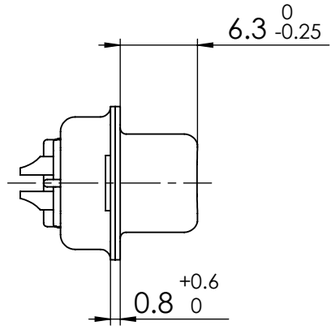

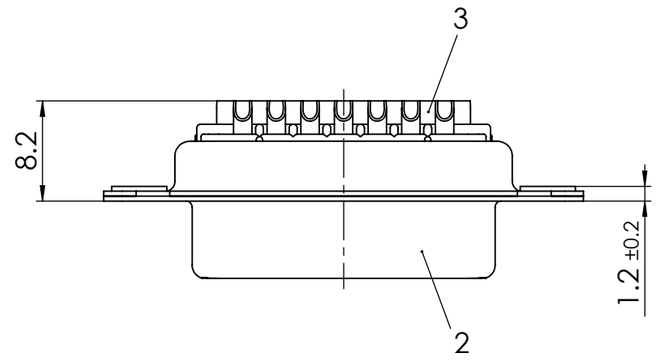

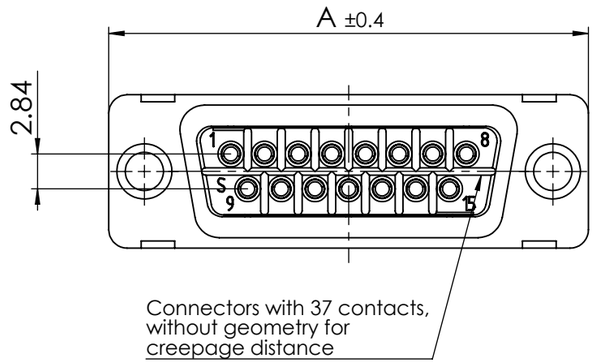

Fxx*1)SA-K700

e.g. F15SA-K700

RoHS compliant

*1) xx No. of contacts 09, 15, 25 or 37

xx	A [mm]	B [mm]	C [mm]
09	30.8	16.4	25
15	39.1	24.7	33.3
25	53	38.5	47.04
37	69.3	54.9	63.5

Protection standard IP67, 100% checked according to DIN EN60529

No.	St.	Part	Type Description/Material	Surface plating/Colour/Class
3	xx	Signal contact	S0 / Brass	AuroPur / AWG 20
2	1	Shell	Brass	tin plated
1	1	Insulator	PBT (-25°C - +70°C)	red

REV.	DATE	CH.-NO.
1		

Measurement without tolerance occ. to ISO 2768-m

SCALE 2:1

NAME / DATE

DRAWN sschref 22-05-2013

CHECKED ADenzinger 22-05-2013

TITLE

Waterproof D-Sub Miniature Connector

FCT a molex company

DWG.NO. FxxSA-K700

REV. 1

ORIGINAL: DIN A3-DRAWING AS A FILE

REPLACEMENT FOR:

PAGES 1

COMMENT:
ALL RIGHTS ARE RESERVED BY US FOR THIS DRAWING, WITHOUT OUR PRIOR CONSENT,
IT MAY NEITHER BE DUBLICATED NOR MADE AVAILABLE TO A THIRD PARTY,
AND IT ALSO MAY NOT BE IMPROPERLY USED BY TE RECEIVER, OR A THIRD PARTY.