KYCON, Inc. 305 Digital Drive, Morgan Hill, CA 95037 (408)494-0330

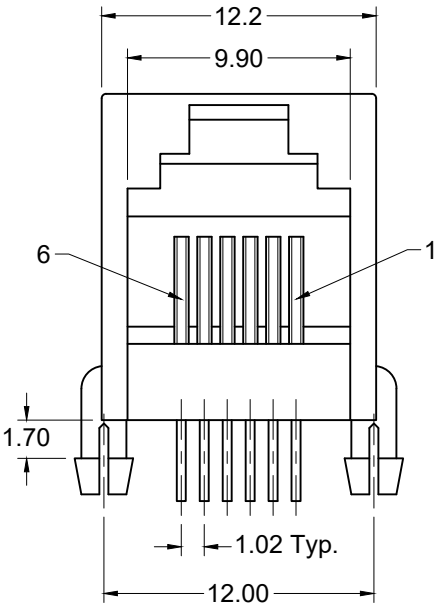

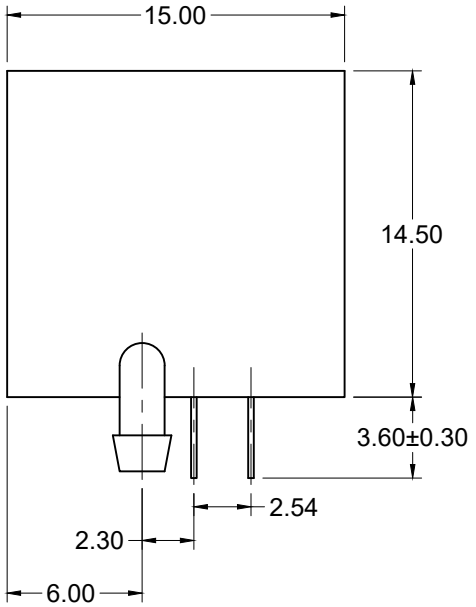

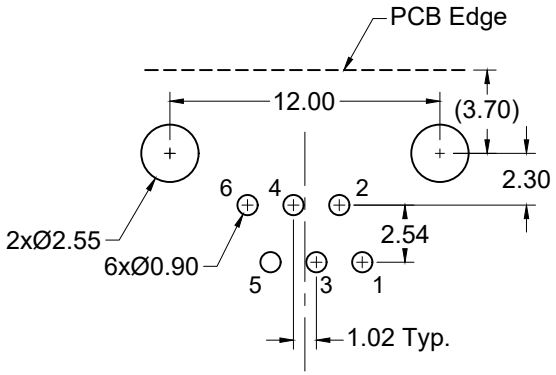

Recommended PCB Layout
(Bottom View)

Materials and Finish

Housing Material-
PBT thermoplastic
UL 94V-0 rated

Contact Material-
phosphor bronze

Contact Plating Options-

Standard: gold flash on contact area, tin on solder area, all over nickel underplate

15: 15u" gold on contact area tin on solder area, all over nickel underplate

50: 50u" gold on contact area tin on solder area, all over nickel underplate

Electrical Characteristics

Current Rating-
1.5 Amps

Voltage Rating-
125V DC

Insulation Resistance-
500 Megohms min.

Dielectric Withstanding Voltage-
1000V rms, 60Hz

Contact Resistance-
20 milliohms max.

Operating Temperature-
-40°C to +85°C

Part Number	Contact Area Plating Finish	Color
GLX-N-66	Gold Flash (standard)	Grey
GLX-N-66-15	15u" Gold (15 option)	Grey
GLX-N-66-50	50u" Gold (50 option)	Grey
GLX-N-66-BLK	Gold Flash (standard)	Black

RoHS COMPLIANT

E134345 LR78160

Tolerances
X.X ± 0.35
X.XX ± 0.25
Unless Stated Otherwise

REV.	DATE	DESCRIPTION	REV. BY	CHK. BY
A4	05/13/10	ECO #10-025	S. Vien	H. MA
A5	12/07/11	ECO #11-081	S. Vien	H. MA
A6	12/12/13	ECO #13-091	D. Gih	H. MA
A7	06/05/17	Updated Address	H. MA	N/A
A8	10/24/25	ECO #25-048	K.Wang	C.Kelleher
A9	04/10/26	ECO #26-006	C. Kelleher	K. Wang

DRAWN BY	DATE
R. Aguirre	9/16/05
	UNITS
	mm

GLX-N-66

Right Angle Modular Jack, Through Hole, .570" Ht.

6 Position, 6 Contacts, No Panel Stops, RoHS Compliant

KYCON