GM5SAExxP0A (Series)

Light Emitting Diode



■ Features

1. Single-chip device, the given output at I_F = 20 mA
2. White Color, high color rendering (achieved via Blue LED chip in combination with red and green phosphors)
3. Luminous flux: 6.0 lm
4. Lumens per watt: 90 to 105
5. Eight devices, covering a number of color temperature ranges:

Part Number	Color Temperature (K)	Luminous Intensity (mcd)
GM5SAE65P0A	6500	(2200)
GM5SAE57P0A	5700	(2200)
GM5SAE50P0A	5000	(2200)
GM5SAE45P0A	4500	(2200)
GM5SAE40P0A	4000	(2150)
GM5SAE35P0A	3500	(2100)
GM5SAE30P0A	3000	(2050)
GM5SAE27P0A	2700	(2000)

■ Agency Approvals/Compliance

1. RoHS compliant

■ Applications

1. General lighting
2. General indication (indoor use only)
3. Office Automation equipment
4. Audio/visual equipment
5. Home appliances
6. Telecommunications equipment
7. Measuring equipment
8. Machine tools
9. Computers

Notice The content of data sheet is subject to change without prior notice.
In the absence of confirmation by device specification sheets, SHARP takes no responsibility for any defects that may occur in equipment using any SHARP devices shown in catalogs, data books, etc. Contact SHARP in order to obtain the latest device specification sheets before using any SHARP device.

Sheet No.: DG-091008
Date March, 2009
©SHARP Corporation

■ External Dimensions

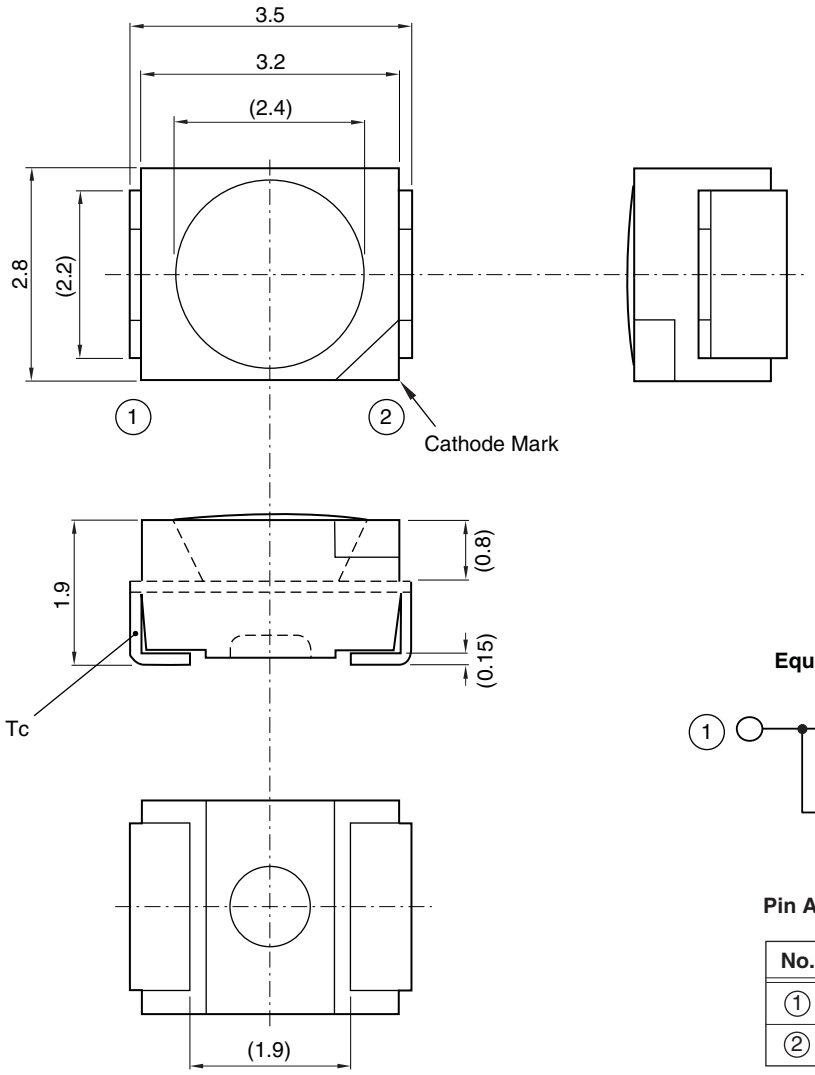

Equivalent Circuit

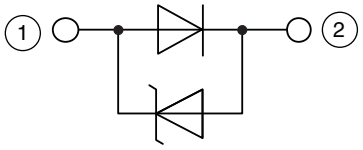

Pin Arrangement

No.	Name
①	Anode
②	Cathode

NOTES:
1. Units: mm
2. Unspecified tolerence: ±0.3 mm
3. ( ): Reference dimensions
4. Case temperature (Tc) measurement point
5. Materials: Package: Nylon and Silicone resin
   Leads: Copper Alloy, Ag plating

GM5SAExxP0A-1

■ Absolute Maximum Ratings

(Tc = 25°C, unless noted)

Parameter	Symbol	Rating	Unit
Power dissipation (Package total) *1	P	111	mW
Power dissipation derating factor *2		2.22	mW/°C
Forward current *1	I_F	30	mA
Peak pulsed forward current *3	I_{FM}	100	mA
Forward current derating factor *7	DC *2	0.60	mA/°C
	Pulse *1	2.0	mA/°C
Reverse current	I_R	70	mA
Junction Temperature *4	Tj	125	°C
Operating temperature *5	Tc	-30 to +100	°C
Storage temperature *6	Tstg	-40 to +100	°C
Soldering temperature *7	Tsol	295	°C

*1 Temperature range: -30°C ≤ Tc ≤ 60°C
*2 Temperature range: 60°C < Tc ≤ 100°C
*3 Duty ratio = 1/10, Pulse width = 0.1 ms
*4 Thermal resistance, junction-to-case = 95°C/W
*5 Case temperature (See External Dimensions on page 2); This device uses the leads for heat sinking, therefore the operating temperature range is prescribed by Tc.
*6 Do not exceed these temperatures under any condition, not even while in packing. Refer to *Storage and Handling.*
*7 Each terminal must be soldered with a 30 W soldering iron within 3 seconds under 295°C.
For Reflow Soldering information, see Fig. 16.
*8 Operating current values here follow the derating curves shown in Fig. 1 through Fig. 3.

(Tc = 25°C)

■ Electro-optical Characteristics

Parameter	Symbol	Conditions	MIN.	TYP.	MAX.	Unit
Forward voltage	V_F	I_F = 20 mA	—	(3.2)	3.7	V
Luminous intensity	I_V		(1530)	*1	(3160)	mcd
Luminous flux	ϕv			6.0		lm
Lumens per watt	lm/W		90		105	
Chromaticity coordinates	x, y			*2		
Color Rendering Index	R_a		—	(80)	—	

*1 See *Characteristics by Model* table.
*2 See *Chromaticity Ranking Table*.

● Characteristics by Model

Part Number	Color Temperature (K)	Chromaticity Coordinates (TYP.)	Chromaticity Rank	Luminous Intensity
GM5SAE65P0A	6500	(0.314, 0.324)	a, b	(2200)
GM5SAE57P0A	5700	(0.328, 0.337)	b, c	(2200)
GM5SAE50P0A	5000	(0.345, 0.352)	c, d	(2200)
GM5SAE45P0A	4500	(0.361, 0.364)	d, e	(2200)
GM5SAE40P0A	4000	(0.381, 0.377)	e, f, g1, g2	(2150)
GM5SAE35P0A	3500	(0.405, 0.391)	g1, g2, h1, h2	(2100)
GM5SAE30P0A	3000	(0.437, 0.404)	j1, j2	(2050)
GM5SAE27P0A	2700	(0.460, 0.411)	k1, k2	(2000)

*1 Measured by EG&G Model 550 (Radiometer/Photometer) after 20 ms drive (Tolerance: ±15%)
See the Luminosity Rank table for ranking range details.
*2 Measured by Otsuka Electronics Model MCPD-2000 after 20 ms drive (Tolerance: x, y: ±0.02).
See the Chromaticity Rank table for ranking range details; quantities of any given rank are decided by Sharp.
* 3 Parens indicate reference values.

■ Derating Curves

Fig. 1 Forward Current vs. Case Temperature

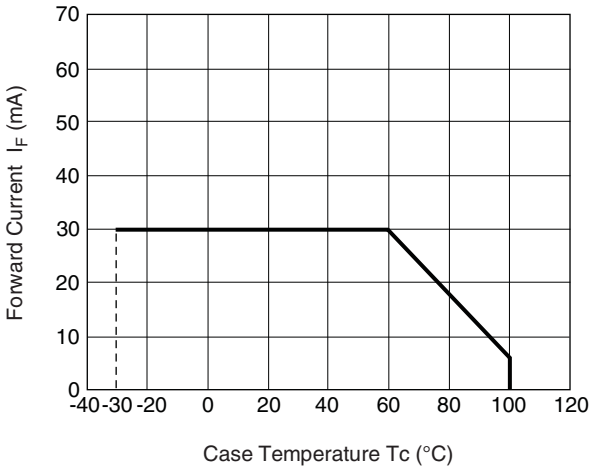

GM5SAExxP02-3

Fig. 2 Peak Pulsed Forward Current vs. Duty Ratio

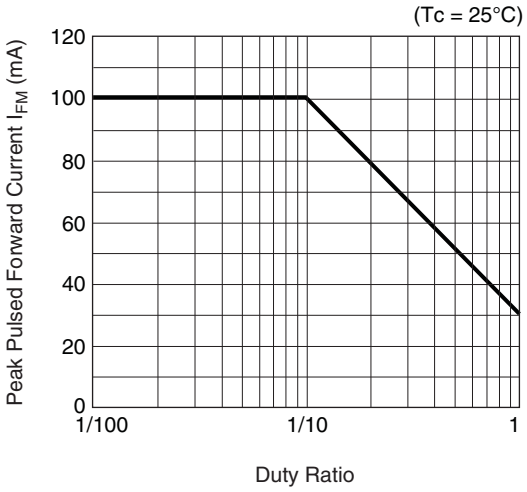

GM5SAExxP0A-5

Fig. 3 Peak Pulsed Forward Current vs. Case Temperature

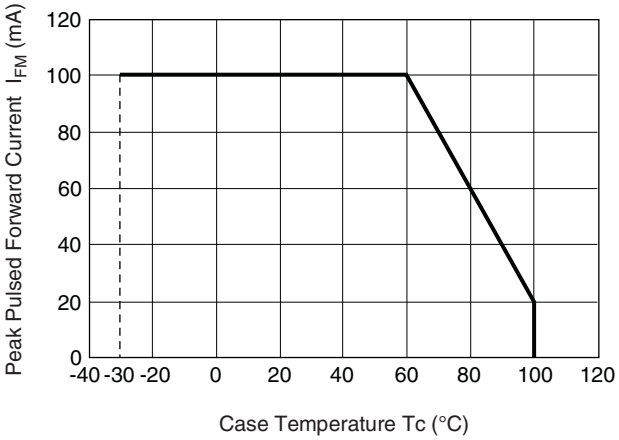

GM5SAExxP0A-4

Fig. 4 Power Dissipation vs. Case Temperature

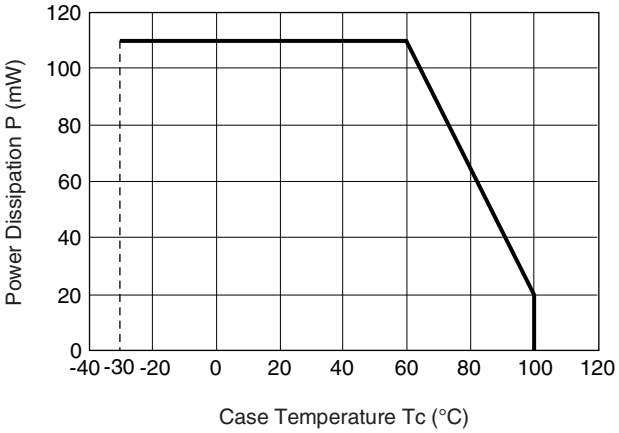

GM5SAExxP0A-6

■ Characteristic Diagrams (TYP.)

Characteristics data are typical data and so are not guaranteed data.

Fig. 5 Relative Luminous Intensity vs. Forward Current

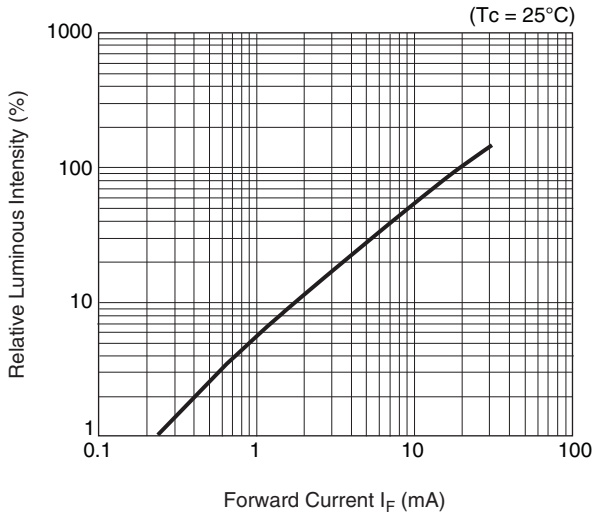

GM5BW5SAExxP0A-7

Fig. 6 Forward Current vs. Forward Voltage

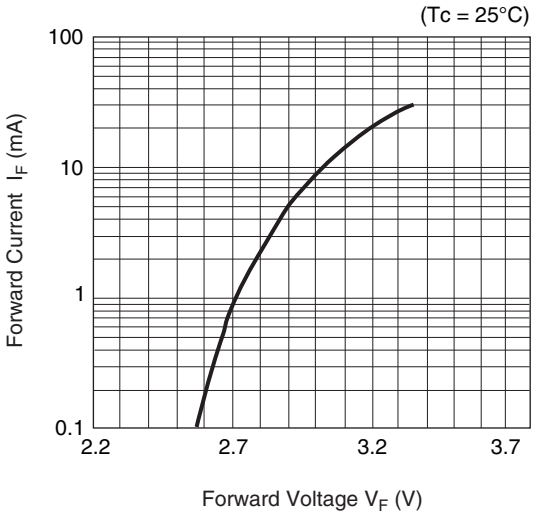

GM5SAExxP0-8

Fig. 7 Relative Luminous Intensity vs. Case Temperature

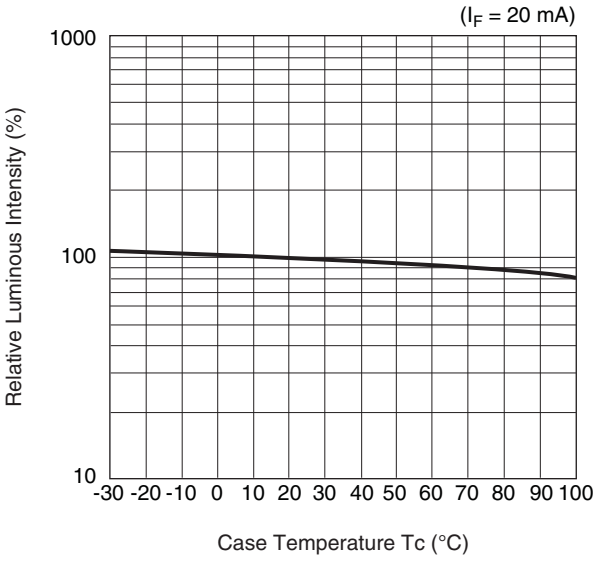

GM5SAExxP0A-9

■ Chromaticity Rank Table

(Tc = 25°C)

Rank	Chromaticity Coordinates (x, y)								Condition
	Point 1		Point 2		Point 3		Point 4		
	x	y	x	y	x	y	x	y	
a	0.293	0.322	0.301	0.293	0.314	0.306	0.309	0.339	
b	0.309	0.339	0.314	0.306	0.329	0.319	0.328	0.357	
c	0.328	0.357	0.329	0.319	0.343	0.331	0.347	0.374	
d	0.347	0.374	0.343	0.331	0.357	0.341	10.365	0.388	
e	0.365	0.388	0.357	0.341	0.370	0.350	0.383	0.400	
f	0.383	0.400	0.367	0.350	0.382	0.357	0.398	0.410	
g	0.398	0.410	0.382	0.357	0.395	0.364	0.416	0.420	
g1	0.398	0.410	0.390	0.382	0.405	0.391	0.416	0.420	I_F = 20 mA
g2	0.340	0.382	0.382	0.357	0.395	0.364	0.405	0.391	
h1	0.416	0.420	0.405	0.391	0.423	0.399	0.437	0.430	
h2	0.405	0.391	0.395	0.364	0.411	0.371	0.423	0.399	
j1	0.437	0.430	0.423	0.399	0.452	0.409	0.469	0.441	
j2	0.423	0.399	0.411	0.371	0.436	0.379	0.452	0.409	
k1	0.469	0.441	0.452	0.409	0.477	0.414	0.497	0.447	
k2	0.452	0.409	0.436	0.379	0.459	0.384	0.477	0.414	

*1 Tolerance: ±0.02.
*2 Shipment quantities of each rank may not be specified by the Customer.

Fig. 8 Chromaticity Diagram

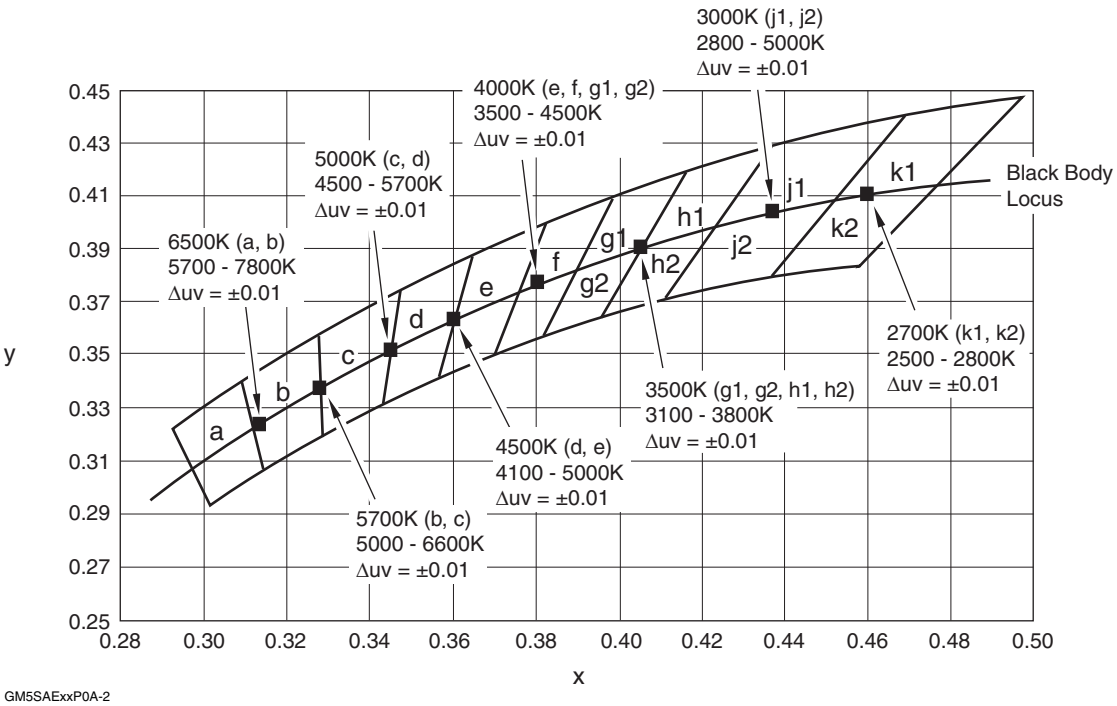

GM5SAExxP0A-2

■ Design Notes

1. Do not allow the circuit to apply any reverse voltage to the LEDs at any time, operating or not. Do not bias this part in any manner when it is not operating. Reverse voltage can also be induced via EMF, generated by ambient light falling on this part. When these parts are operated in series, connect a zener diode parallel to each part to protect them from reverse voltage.
2. This part can be damaged by mechanical stress. Be certain that assembly steps do not stress this part; pay particular attention to pick-and-place equipment. Verify placing pressure and do not allow the collet to contact the resin of this part.
3. This product uses blue LED chips in combination with yellow phosphor to achieve its color. There may be some slight color change due to afterglow of the phosphor when driving this part with pulsed power.
4. This part has a high light output. Looking directly at it during full power output may cause injury.
5. Sharp recommends taking proper personal and environmental static control precautions when handling this part.
6. This device incorporates thermally conductive materials to allow heat to be transferred from it to the circuit board. For best reliability, do not locate other sources of heat near the LED, and design the circuit board for effective heat dissipation. Keep the part's case temperature under 100°C (LED ON) including self-heating.
7. Handle these parts in a clean environment; dust may be difficult to remove and can affect optical performance.
8. Confirm the part's performance, reliability, and resistance to degradation, if exposing it to these environments:
   - Direct sunlight, outdoor exposure, dusty conditions
   - In water, oil, medical fluids, and organic solvents
   - Excessive moisture, such as dew or condensation
   - Corrosive (salt) air or corrosive gases, such as Cl, H_2S, NH_3, SO_2, NO_X

■ Reliability and Quality Information

Sharp tests to a Reliability Confidence Level of 90%. These tables illustrate the test criteria and conditions, along with the Number of Samples, the Number of Defectives, and the Lot Tolerance Percent Defective.

No.	Test Items	Test Conditions	Samples (n)	Defective (C)	LTPD (%)
1	Temperature cycle	-40°C (30 min) to +100°C (30 min), 100 cycles	22	0	10
2	High temp and high humidity storage	Tstg = +60°C, RH = 90%, t = 1000 hr	22	0	10
3	High temperature storage	Tstg = +100°C, t = 1000 hr	22	0	10
4	Low temperature storage	Tstg = -40°C, t = 1000 hr	22	0	10
5	Operating test	Tc = +60°C, I_F = 30 mA, t = 1000 hr	22	0	10
6	Mechanical shock	15000 m/s^2, 0.5 ms ±X • ±Y • ±Z direction, 3 times (Tc = 25°C)	11	0	20
7	Variable frequency vibration	200 m/s^2, 100 to 2000 to 100 Hz / sweep for 4 min. X • Y • Z direction, 4 times (Tc = 25°C)	11	0	20
8	Resistance to soldering temperatures	Refer to the Soldering Profile; Performed twice	11	0	20
9	Solderability	Solder/flux M705/ESR250 (Senju Metal Industry Co. Ltd.) Soldering temperature 245°C ±5°; dip time 3 sec, after 150°C exposure for 1 hr	11	0	20
10	Electrostatic Discharge	HBM 1 kV (EIAJ ED-4710 test method 304 compliant)	11	0	20

● Failure Judgement Criteria

No.	Items	Symbol	Failure judgment criteria (*2)
1	Forward voltage	V_F	V_F > U.S.L × 1.2
2	Reverse current	I_R	I_R > U.S.L × 2.0
3	Luminous intensity (*3)	Iv	Iv < Initial value × 0.5, Iv > Initial value × 2.0

*1 Measuring condition is in accordance with specification.
*2 U.S.L.: Upper Specification Limit.
*3 Solderability failure criterion: Fail if >90% solderability in plated test areas are not soldered.
Judgement areas are the bottom and sides as shown in Fig. 9, excluding 0.3 mm from lead bends.

Fig. 9 Solderability Judgment Areas

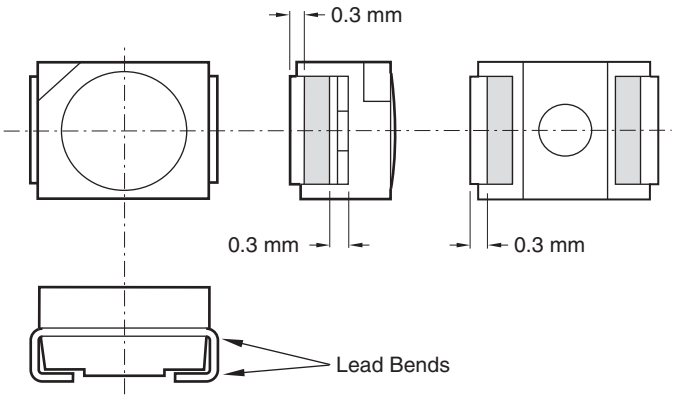

GM5SAExxP0-10

● Lifetime Data

Mean lifetime: 40,000 hr

Conditions: Tc = 60°C, I_F = 20 mA

Criterion: Iv < Initial value × 0.7

1. Lifetime Data Estimation Methods

Luminous intensity variation data is acquired during a 3,000-hour accelerated test, with the conditions of Tc = 70 to 110°C, and I_F = 15 to 30 mA.

Using data points gathered from 1,000 to 3,000 hours, the value τ (which is the point of 70% decrease in luminous output) is calculated based on the linear regression of the relationship between the luminous intensity maintenance ratio and the square root of the time. An Arrhenius plot of the Mean Lifetime is generated by plotting case temperature and the value τ. Therefore the Lifetime Estimate becomes the 70% decrease of the initial luminous intensity at 50°C.

● Quality Level

Sharp utilizes the IS02859-1 standard when measuring product quality. The method is a single sampling plan, following normal inspection level S-4. This table lists the Defect Judgment Criteria and Defect Classifications.

No.	Test Items	Defect Judgment	Defect	AQL
1	Light emission	No light emission	Major defect	.0.1%
2	Radiation color	Different color vs. that prescribed in the Chromaticity Chart		
3	Taping	Product inserted incorrectly (anything not as specified)		
4	Electro-optical characteristics	Does not fully conform to specification values for V_F or I_V.	Minor defect	0.4%
5	External dimensions	Does not fully conform to specification values for External Dimensions		
6	Appearance	Foreign substances and flaws which affect the appearance: Resin burr which exceeds tolerance, (±0.3 mm MAX.) More than 0.4 mm cracks in resin or terminal		

■ Tape Specifications

Fig. 10 Tape Shape and Dimensions

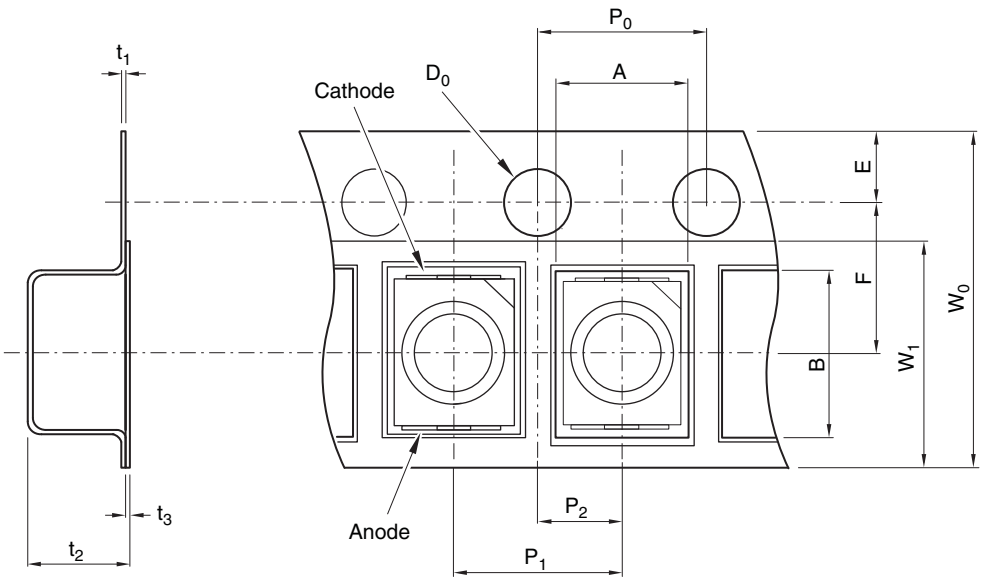

GM5SAExxP0A-11

■ Tape Dimension Specifications

Parameter		Symbol	Dimension (mm)	Remarks
Embossed pocket	Vertical	A	3.0	Measured at inside bottom square corner
	Horizontal	B	3.7	
	Pitch	P_1	4.0	
Sprocket hole	Diameter	D_0	1.5	
	Pitch	P_0	4.0	Accumulated error ±0.5 mm/10 pitch
	Position	E	1.75	Distance between the edge of the tape and center of the hole
Pocket Position	Vertical	P_2	2.0	Distance between center lines of the concave square hole and round sprocket hole
	Horizontal	F	3.5	
Cover tape	Width	W_1	5.4	
	Thickness	t_3	0.1	
Carrier tape	Width	W_0	8.0	
	Thickness	t_1	0.3	
Overall thickness		t_2	2.6	Includes thickness of cover tape and carrier tape

■ Reel Specifications

Fig. 11 Reel Shape and Dimensions

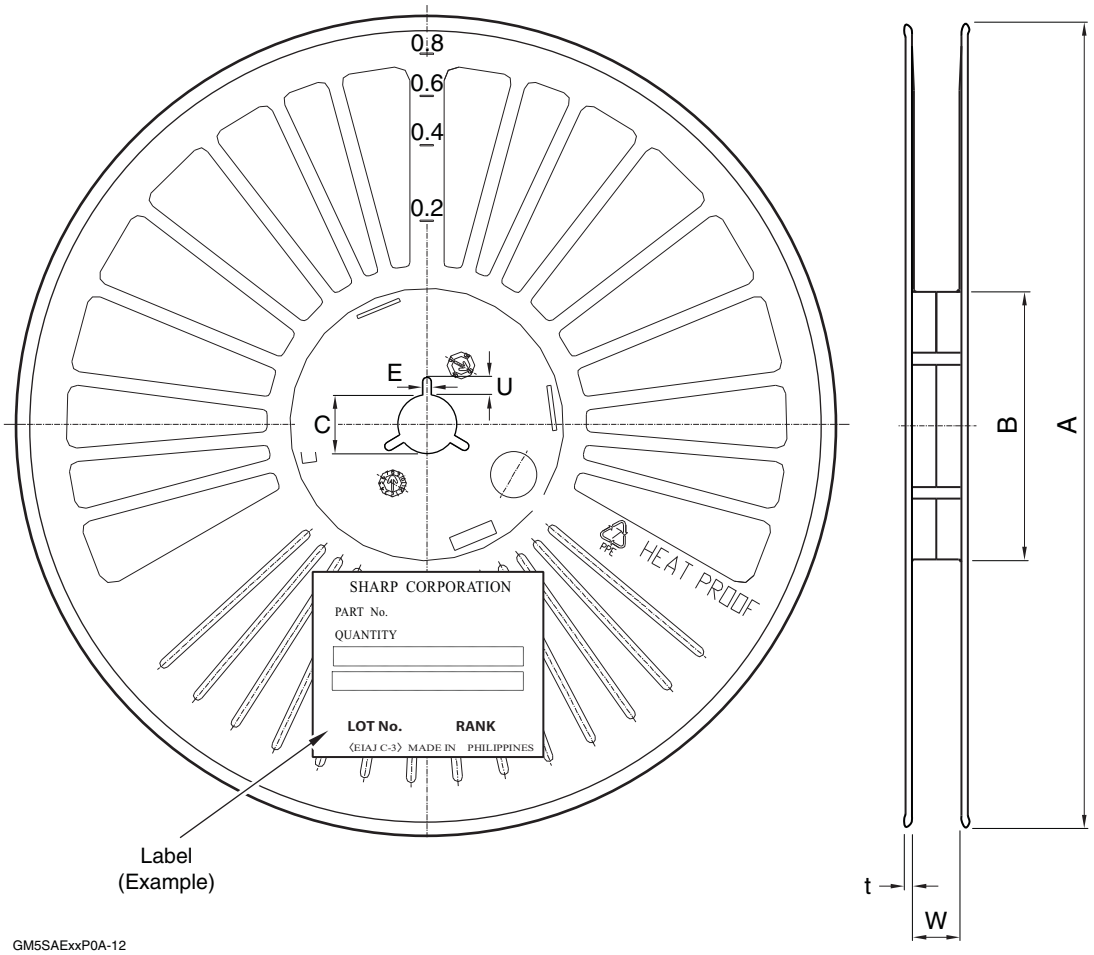

GM5SAExxP0A-12

■ Reel Dimension Specifications

Parameter		Symbol	Dimension (mm)	Remarks
Flange	Diameter	A	180	
	Thickness	t	1.3	
	Flange spacing	W	9.5	Shaft core dimension
Hub	External diameter	B	60	
	Spindle hole diameter	C	13	
	Key slit width	E	2.0	
	Key slit depth	U	4	

*1 Label on side of flange: part number, quantity, lot number, and rank.
*2 Material: described on flange.

■ Taping Specifications

1. Leader tape standard: JIS C0806

Fig. 12 Leader Tape

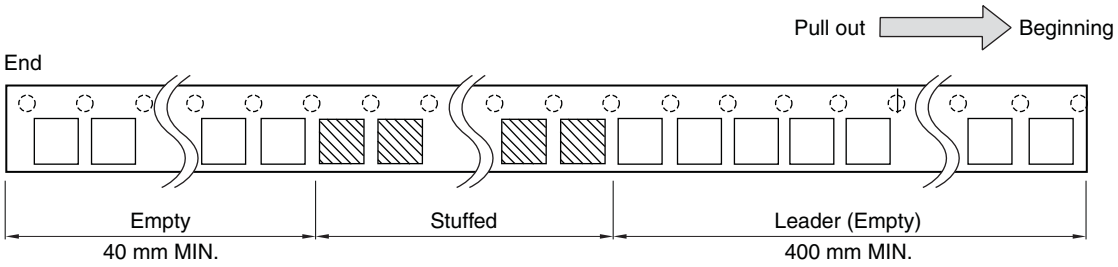

GM5SAExxP0A-13

2. Cover tape peel resistance: F = 0.1 to 1.0 N (θ = 10° or less). See Fig. 10.

Fig. 13 Tape Separation

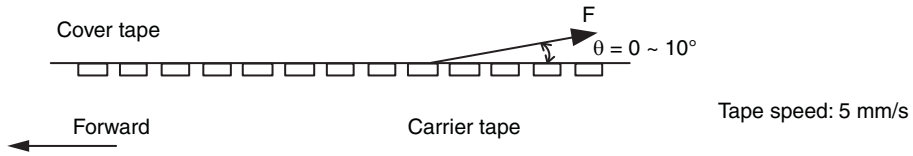

GM5SAExxP0A-14

3. Tape bending resistance: Cover tape will remain in place on radii of 30 mm or more. Under 30 mm radii, the cover may separate.
4. Joints are not allowed in the cover tape.
5. Parts are packed with an average quantity of 2000 pieces per reel.
6. Product mass: 30 mg (approximately)
7. Sharp guarantees the following:
   a. No contiguous empty spaces in the tape
   b. Missing parts will not make up more than 0.1% of the total quantity.
   c. Parts will be easily removed from the tape.
8. Parts will not stick to the cover tape as it is peeled.

■ Label and Marking Information

Fig. 14 Label Contents

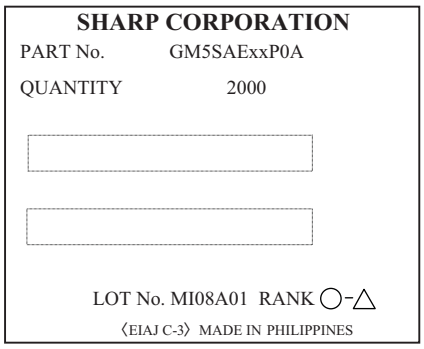

← Part number
← Quantity
← EIAJ C-3 Bar code
← EIAJ C-3 Bar code
← Lot number and rank
← Production country

LOT Number

MI 08 A 01

① ② ③ ④

① Production plant code (alphabetically)
② Production year (the last two digits of the year)
③ Production month
(alphabetically with January corresponding to A)
④ Production date (01 ~ 31)

Rank ◯-△ : Chromaticity rank

GM5SAExxP0A-15

■ Manufacturing Guidelines

● Storage and Handling

1. Moisture-proofing: These parts are shipped in vacuum-sealed bags to keep them dry and ready for use. See Fig. 15.
2. Store these parts between 5°C and 30°C, at a relative humidity of less than 70%; for no more than one year from the production date.
3. After breaking the package seal, maintain the environment within 5°C to 30°C, at a relative humidity of less than 60%. Solder the parts within 3 days.
4. If the parts will not be used immediately, repack them in a dry box, or re-vacuum-seal them with a desiccant.
5. If the parts are exposed to air for more than 3 days, or if the silica gel telltale indicates moisture contamination, bake the parts:
   - When in the tape carrier, bake them at a temperature of 95°C to 100°C, for 16 to 24 hours.
   - When loose or on a PCB, bake them at a temperature of 110°C to 120°C, for 8 to 12 hours.
   - Note that the reels may become distorted if they are in a stack when baking. Confirm that the parts have cooled to room temperature after baking.

● Cleaning Instructions

1. Sharp does not recommend cleaning printed circuit boards containing this device, or cleaning this device with ultrasonic methods. Process chemicals will affect the structural and optical characteristics of this device.
2. Sharp recommends the use of a solder paste that does not require cleaning.
3. Do not clean this part ultrasonically.

Fig. 15 Factory Moisture-proof Packing

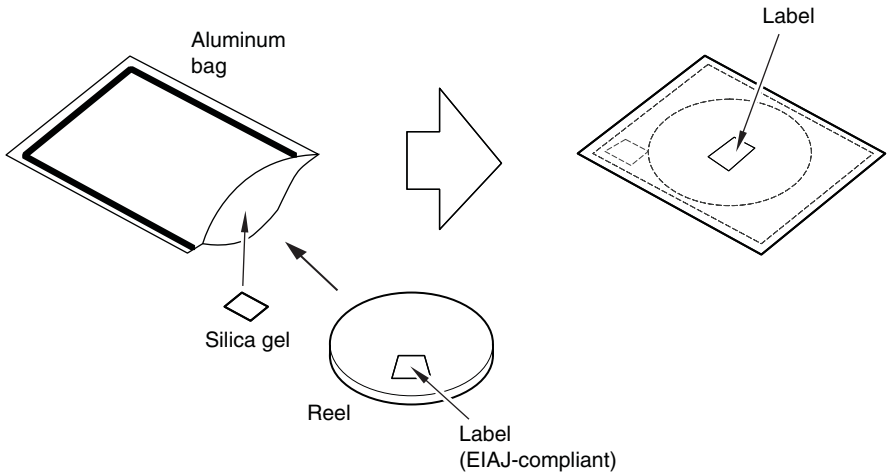

GM5SAExxP0A-16

● Soldering Instructions

1. When soldering with reflow methods, Sharp recommends following the soldering profile in Fig. 16.
2. Do not subject the package to excessive mechanical force during soldering as it may cause deformation or defects in plated connections. Internal connections may be severed due to mechanical force placed on the package due to the PCB flexing during the soldering process.
3. When using a second reflow, the second process should be carried out as soon as possible after the first. Storage in a dry box is recommended between reflows.
4. Electrodes on this part are silver-plated. If the part is exposed to a corrosive environment, the plating may be damaged, thereby affecting solderability.
5. The Reflow Profile shown in Fig. 16 should be considered as a set of maximum parameters. Since this part uses the leads for heatsinking, the peak temperature should be kept as cool as possible and the cooldown period lengthened as much as possible. Thermal conduction into the LED will be affected by the performance of the reflow process, so verification of the reflow process is recommended. These parts may be used in a nitrogen reflow process.

Fig. 16 Temperature Profile

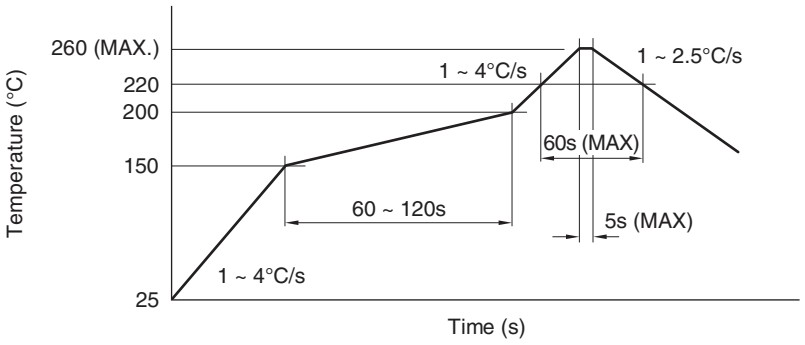

GM5SAExxP0A-17

● Recommended Solder Pad Design

1. Solderability depends on reflow conditions, solder paste, and circuit board materials. Check the entire process before production commences.
2. Fig. 17 shows the recommended solder pad design for this part.
3. When using backside dip methods, Sharp recommends checking the process carefully: board warping from heat can cause mechanical failure in these parts, in addition to the high heat conducted into the part through the leads. Performing reflow after dip is recommended, with the interval between the two as short as possible.

Fig. 17 Recommended Solder Pad Design

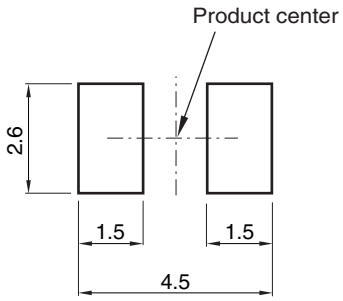

NOTE: Unit: mm

GM5SAExxP0A-18

● Pick and Place Recommendations

1. Picking errors can occur based on the machine's setup, so Sharp recommends verification with the machine in actual use.
2. Do not allow the pick and place machine to contact the sealing resin in this part. If mechanical stress is placed on the sealing resin, such forces can cause the resin to fail, or cause bonding wires within the part to break.

■ Presence of ODCs

This product shall not contain the following materials, and they are not used in the production process for this product:

- Regulated substances: CFCs, Halon, Carbon tetrachloride, and 1,1,1-Trichloroethane (Methylchloroform). Specific brominated flame retardants such as the PBBOs and PBBs are not used in this product at all.

This product shall not contain the following materials banned in the RoHS Directive (2002/95/EC).

- Lead, Mercury, Cadmium, Hexavalent chromium, Polybrominated biphenyls (PBB), Polybrominated diphenyl ethers (PBDE).

■ Important Notices

· The circuit application examples in this publication are provided to explain representative applications of SHARP devices and are not intended to guarantee any circuit design or license any intellectual property rights. SHARP takes no responsibility for any problems related to any intellectual property right of a third party resulting from the use of SHARP's devices.

· Contact SHARP in order to obtain the latest device specification sheets before using any SHARP device. SHARP reserves the right to make changes in the specifications, characteristics, data materials, structure, and other contents described herein at any time without notice in order to improve design or reliability. Manufacturing locations are also subject to change without notice.

· Observe the following points when using any devices in this publication. SHARP takes no responsibility for damage caused by improper use of the devices which does not meet the conditions and absolute maximum ratings to be used specified in the relevant specification sheet nor meet the following conditions:
(i) The devices in this publication are designed for use in general electronic equipment designs such as:
--- Personal computers
--- Office automation equipment
--- Telecommunication equipment (terminal)
--- Test and measurement equipment
--- Industrial control
--- Audio visual equipment
--- Consumer electronics

(ii) Measures such as fail-safe function and redundant design should be taken to ensure reliability and safety when SHARP devices are used for or in connection with equipment that requires higher reliabilty such as:
--- Transportation control and safety equipment (i.e., aircraft, trains, automobiles, etc.)
--- Traffic signals
--- Gas leakage sensor breakers
--- Alarm equipment
--- Various safety devices, etc.

(iii) SHARP devices shall not be used for or in connection with equipment that requires an extremely high level of reliability and safety such as:
--- Space applications
--- Telecommunication equipment (trunk lines)
--- Nuclear power control equipment
--- Medical and other life support equipment (e.g. scuba)

· If the SHARP devices listed in this publication fall within the scope of strategic products described in the Foreign Exchange and Foreign Trade Law of Japan, it is necessary to obtain approval to export such SHARP devices.

· This publication is the proprietary product of SHARP and is copyrighted, with all rights reserved. Under the copyright laws, no part of this publication may be reproduced or transmitted in any form or by any means, electronic or mechanical, for any purpose, in whole or in part, without the express written permission of SHARP. Express written permission is also required before any use of this publication may be made by a third party.

· Contact and consult with a SHARP representative if there are any questions about the contents of this publication.