Agilent HSMx-C660 Right Angle Surface Mount Chip LEDs

Data Sheet



Features

- **Right Angle Mounting**
- **Compatible with IR Reflow Soldering Process**
- **Available in a Wide Variety of Colors**
- **Available in 8 mm Tape on 178 mm (7") Diameter Reels**

Description

The HSMx-C660 series of chip-type LEDs are designed to illuminate at a right angle to the direction of mounting. When mounted on a PC board, these devices will emit light in a direction parallel to the board.

The small 3.0 x 2.0 mm footprint of the HSMx-C660 is designed for applications where space is limited. These devices are available in four colors and use untinted, non-diffused optics.

The HSMx-C660 series of parts are compatible with IR reflow soldering process only.

Package Dimensions

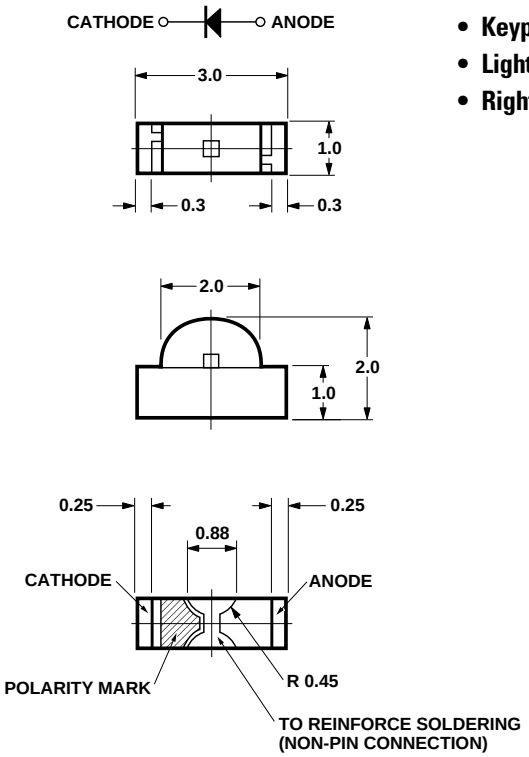

Applications

- **LCD Backlighting**
- **Keypad Side/Backlighting**
- **Light Piping**
- **Right Angle Indicator**

Footprint (mm)	Parts per Reel	DH AS AlGaAs	High Efficiency Red	Yellow	Green
3.0 x 2.0 x 1.0	3000	HSMH-C660	HSMS-C660	HSMY-C660	HSMG-C660

Absolute Maximum Ratings at $T_A = 25°C$

Parameter	HSMx-C660	Units
DC Forward Current[1]	25	mA
Power Dissipation	65	mW
Reverse Voltage (I_R = 100 μA)	5	V
Operating Temperature Range	–30 to +85	°C
Storage Temperature Range[2]	–40 to +100	°C

Notes:
1. Derate linearly as shown on Figure 4.
2. Maximum temperature for the tape and reel packaging is 60°C.

Optical Characteristics at $T_A = 25°C$

Part No.	Color	Luminous Intensity I_v (mcd) @ I_F = 20 mA Min.	Typ.	Peak Wavelength λ_{peak} (nm) Typ.	Color Dominant Wavelength λ_d[1] (nm) Typ.	Viewing Angle $2\theta_{1/2}$ (degrees)[2] Typ.	Luminous Efficacy η_v (lm/W)
HSMH-C660	DH AlGaAs Red	6.3	16.0	650	639	155	80
HSMS-C660	High Efficiency Red	1.6	5.0	639	626	155	145
HSMY-C660	Yellow	1.6	5.0	589	586	155	500
HSMG-C660	Green	4.0	9.0	570	572	155	595

Notes:
1. The dominant wavelength, λ_d, is derived from the CIE Chromaticity Diagram and represents the perceived color of the device.
2. $\theta_{1/2}$ is the off-axis angle where the luminous intensity is $1/2$ the peak intensity.

Electrical Characteristics at $T_A = 25°C$

Part No.	Color	Forward Voltage V_F (Volts) @ I_F = 20 mA Typ.	Max.	Reverse Breakdown V_R (Volts) @ I_R = 100 μA Min.	Capacitance C (pF) V_F = 0, f = 1 MHz Typ.	Thermal Resistance $R\theta_{J\text{-}PIN}$ (°C/W)
HSMH-C660	DH AlGaAs Red	1.8	2.2	5	4.5	300
HSMS-C660	High Efficiency Red	1.9	2.6	5	4.0	300
HSMY-C660	Yellow	2.1	2.6	5	3.0	300
HSMG-C660	Green	2.2	2.6	5	8.0	300

Color Bin Limits[1]

	Green Color Bins[1]	
	Dom. Wavelength [nm]	
Bin ID	MIN.	MAX.
A	561	565
B	564	568
C	567	571
D	570	574
E	573	577

Note:
1. Bin categories are established for classification of products.
   Products may not be available in all categories.
   Please contact your Agilent representative for information on currently available bins.

	Yellow/Amber Color Bins[1]	
	Dom. Wavelength [nm]	
Bin ID	MIN.	MAX.
A	581.5	585.0
B	584.0	587.5
C	586.5	590.0
D	589.0	592.5
H	591.5	595.0
J	594.0	597.5

For HSMC, HSMH, HSMS, HSMZ (Red Color)
No color binning available.

Light Intensity (Iv) Bin Limits[1]

	Intensity (mcd)	
Bin ID	min.	max.
A	0.10	0.20
B	0.16	0.32
C	0.25	0.50
D	0.40	0.80
E	0.63	1.25
F	1.00	2.00
G	1.60	3.20
H	2.50	5.00
J	4.00	8.00
K	6.30	12.50
L	10.00	20.00
M	16.00	32.00
N	25.00	50.00
P	40.00	80.00
Q	63.00	125.00
R	100.00	200.00
S	160.00	320.00
T	250.00	500.00

Note:
1. Bin categories are established for classification of products.
   Products may not be available in all categories.
   Please contact your Agilent representative for information on currently available bins.

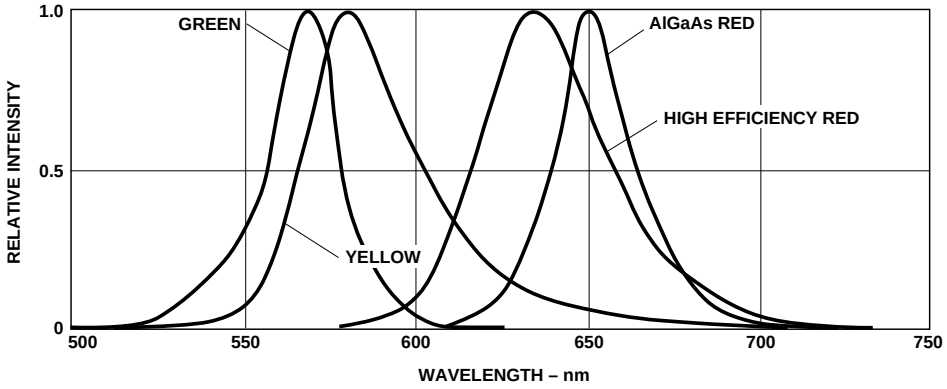

Figure 1. Relative Intensity vs. Wavelength.

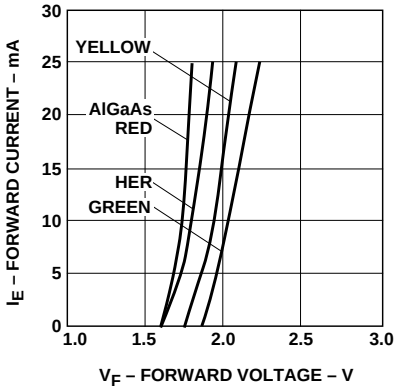

Figure 2. Forward Current vs. Forward Voltage.

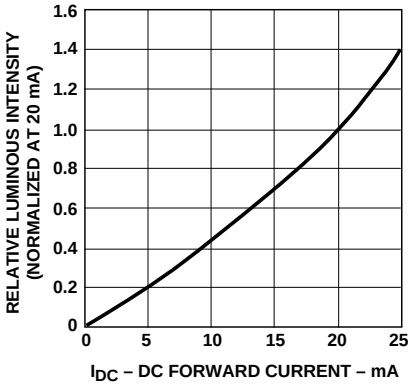

Figure 3. Relative Luminous Intensity vs. DC Forward Current.

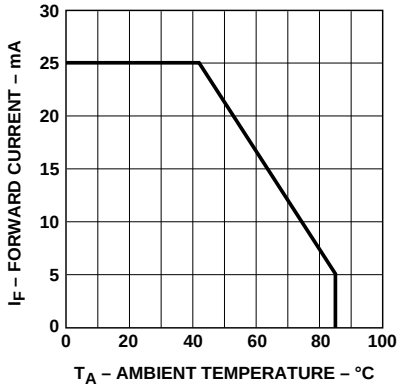

Figure 4. Maximum DC Current vs. Ambient Temperature.

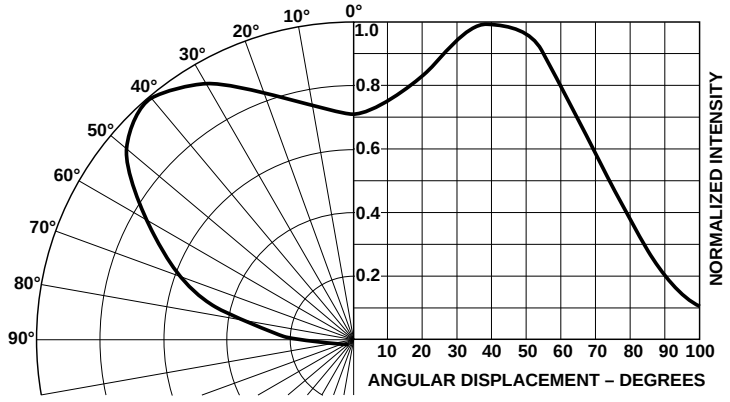

Figure 5. HSMx-C660 Intensity vs. Angle, Vertical Axis.

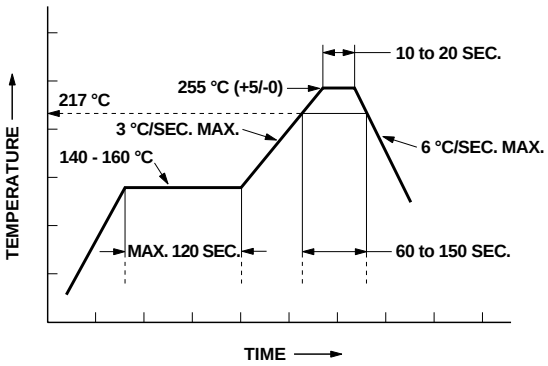

*** THE TIME FROM 25 °C TO PEAK TEMPERATURE = 6 MINUTES MAX.**

Figure 6. Recommended Pb-Free Reflow Soldering Profile.

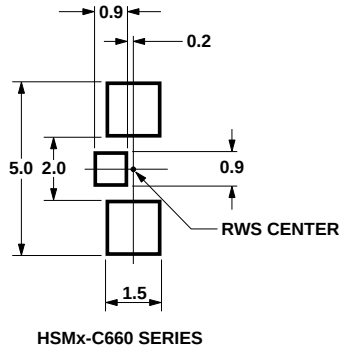

HSMx-C660 SERIES

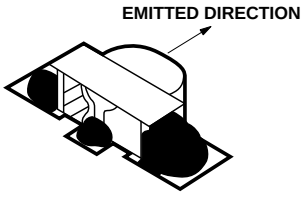

MOUNTING EXAMPLE FOR HSMx-C660 SERIES

Figure 7. Recommended Solder Patterns.

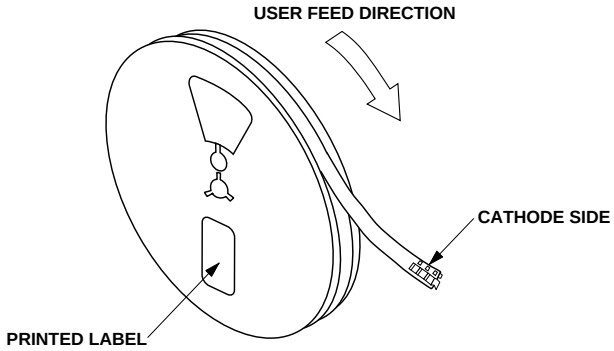

Figure 8. Reeling Orientation for the HSMx-C660.

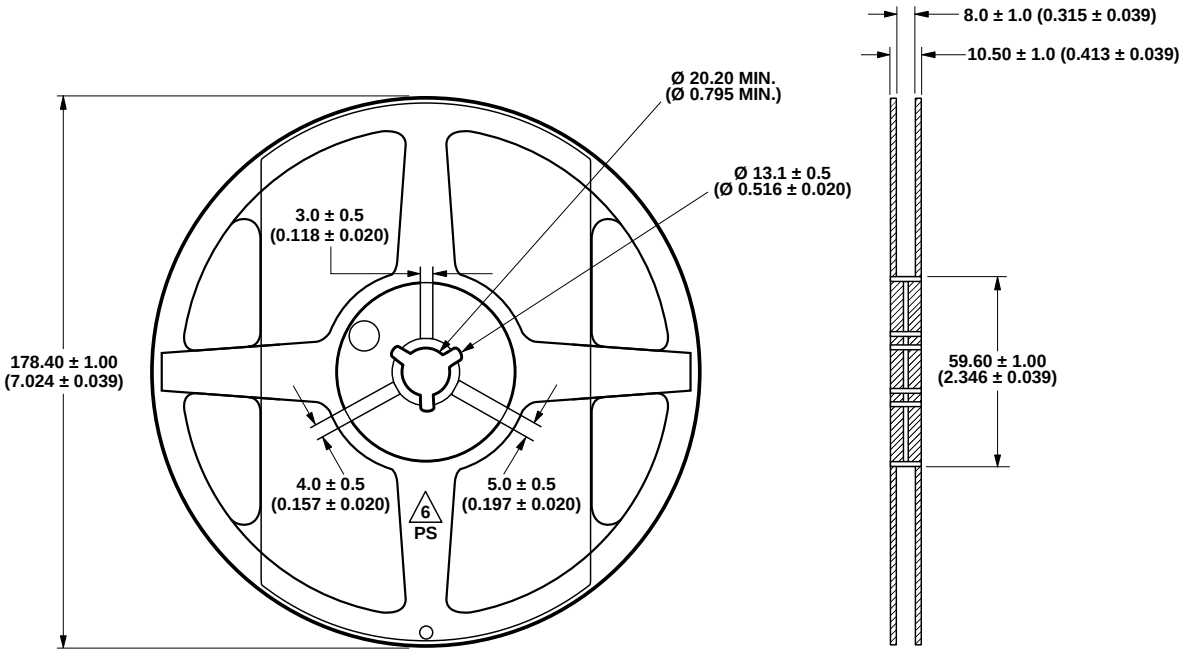

Figure 9. Reel Dimensions.

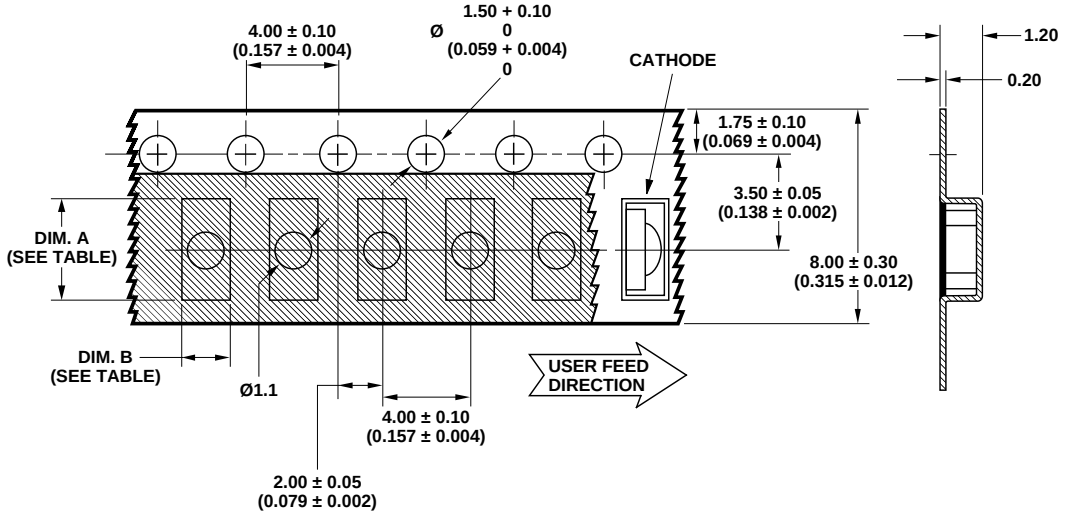

Part Number	DIM. A ±0.10 (0.004)	DIM. B ±0.10 (0.004)
HSMx-C660	3.35	2.30

Figure 10. Tape Dimensions.

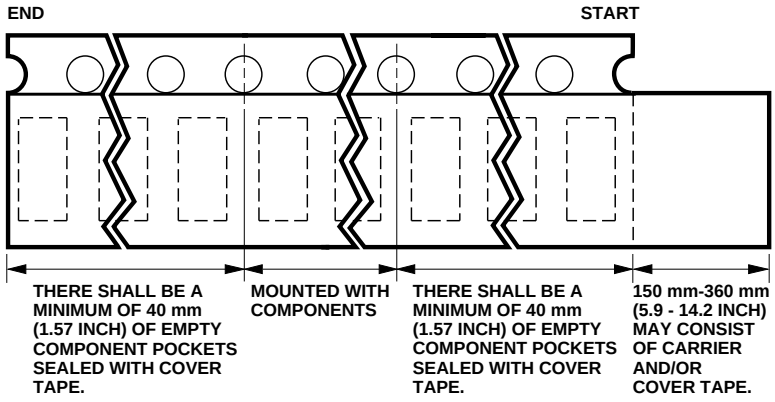

Figure 11. Tape Leader and Trailer Dimensions.

Storage Condition: 5 to 30°C @ 60% RH max.
Baking is required under the condition:
a) the blue silica gel indicator becoming white/transparent color
b) the pack has been opened for more than 1 week
Baking recommended condition: 60 +/– 5°C for 20 hours.

www.agilent.com/semiconductors

For product information and a complete list of distributors, please go to our web site.

For technical assistance call:

Americas/Canada: +1 (800) 235-0312 or (916) 788-6763

Europe: +49 (0) 6441 92460

China: 10800 650 0017

Hong Kong: (+65) 6756 2394

India, Australia, New Zealand: (+65) 6755 1939

Japan: (+81 3) 3335-8152 (Domestic/International), or 0120-61-1280 (Domestic Only)

Korea: (+65) 6755 1989

Singapore, Malaysia, Vietnam, Thailand, Philippines, Indonesia: (+65) 6755 2044

Taiwan: (+65) 6755 1843

Data subject to change.

Copyright © 2003 Agilent Technologies, Inc.

Obsoletes 5988-4446EN
October 7, 2003
5989-0165EN



Agilent Technologies