LAN Product
Single Port PoE-ultra Gigabit Module



- *High Power rated Gigabit Module supports 48W over 2 pair (850mA at 57V) continous*
- *Industry Standard SMD Package and Footprint*
- *245˚C Peak Reflow Solder Temperature*

Electrical Specifications @ 25°C - Operating Temperature -40°C to +85°C, Storage Temperature - 55˚C to 125˚C

Part Number	OCL * @ 25mA DC Bias (uH min)	Insertion Loss* 1-100MHz (dB MAX)	Return Loss* (dB min) (Z=100Ω)					DCMR (dB MIN)	DCR (dB MIN)			Hi-Pot (V_{RMS})
			1-30 MHz	40 MHz	50 MHz	60-80 MHz	100 MHz	0.1 to 100 MHz	30 MHz	60 MHz	100 MHz	
HX6106NL	350	1.4	-18	-16	-14	-10	-8	-33	-43	-37	-33	1500

Notes:
* Tested and specified at 25˚C +/- 10˚C

Mechanical

HX6106NL

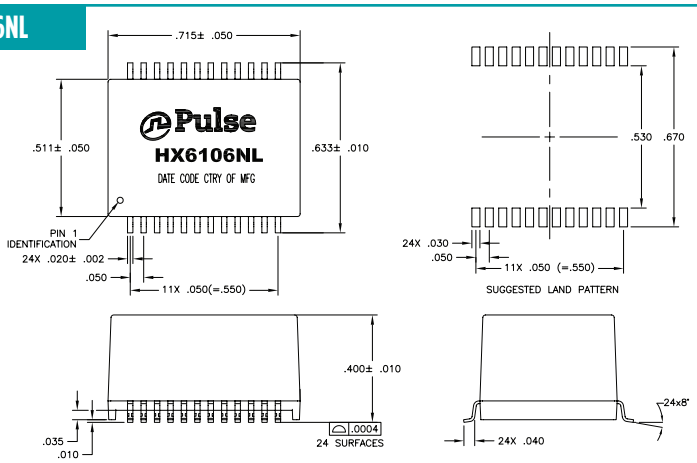

Weight .....1.9 grams
Tape & Reel 250/reel
Tube Qty .....25 pcs
Dimensions: Inches / mm

Unless otherwise specified, all tolerances are ± .010 / 0,25

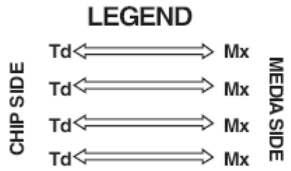

Schematic

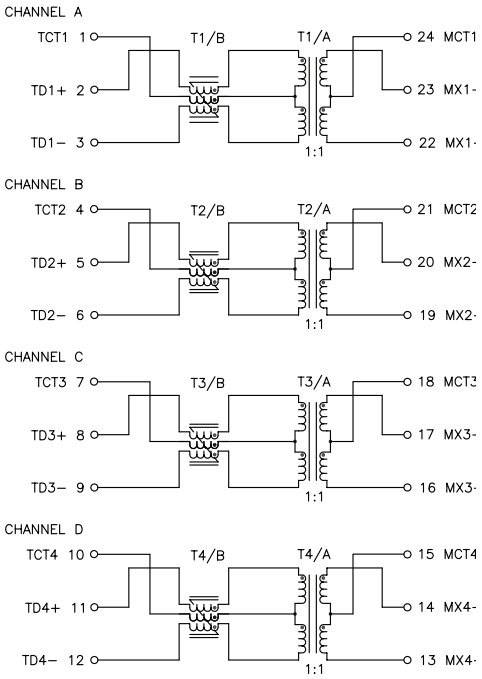

For More Information

Pulse Worldwide Headquarters
12220 World Trade Drive
San Diego, CA 92128
U.S.A.

Tel: 858 674 8100
Fax: 858 674 8262

Pulse Europe
Zeppelinstrasse 15
D-71083 Herrenberg
Germany

Tel: 49 7032 78060
Fax: 49 7032 7806 135

Pulse China Headquarters
B402, Shenzhen Academy of Aerospace Technology Bldg.
10th Kejinan Road
High-Tech Zone
Nanshan District
Shenzen, PR China 518057
Tel: 86 755 33966678
Fax: 86 755 33966700

Pulse North China
Room 2704/2705
Super Ocean Finance Ctr.
2067 Yan An Road West
Shanghai 200336
China

Tel: 86 21 62787060
Fax: 86 2162786973

Pulse South Asia
135 Joo Seng Road
#03-02
PM Industrial Bldg.
Singapore 368363

Tel: 65 6287 8998
Fax: 65 6287 8998

Pulse North Asia
3F, No. 198
Zhongyuan Road
Zhongli City
Taoyuan County 320
Taiwan R. O. C.
Tel: 886 3 4356768
Fax: 886 3 4356823 (Pulse)
Fax: 886 3 4356820 (FRE)

Performance warranty of products offered on this data sheet is limited to the parameters specified. Data is subject to change without notice. Other brand and product names mentioned herein may be trademarks or registered trademarks of their respective owners. © Copyright, 2012. Pulse Electronics, Inc. All rights reserved.