3.3V ZERO DELAY CLOCK MULTIPLIER

IDT2308

FEATURES:

- Phase-Lock Loop Clock Distribution for Applications ranging from 10MHz to 133MHz operating frequency
- Distributes one clock input to two banks of four outputs
- Separate output enable for each output bank
- External feedback (FBK) pin is used to synchronize the outputs to the clock input
- Output Skew <200 ps
- Low jitter <200 ps cycle-to-cycle
- 1x, 2x, 4x output options (see table):
  - *IDT2308-1 1x*
  - *IDT2308-2 1x, 2x*
  - *IDT2308-3 2x, 4x*
  - *IDT2308-4 2x*
  - *IDT2308-1H, -2H, and -5H for High Drive*
- No external RC network required
- Operates at 3.3V VDD
- Available in SOIC and TSSOP packages

NOTE: EOL for non-green parts to occur on 5/13/10 per PDNU-09-01

DESCRIPTION:

The IDT2308 is a high-speed phase-lock loop (PLL) clock multiplier. It is designed to address high-speed clock distribution and multiplication applications. The zero delay is achieved by aligning the phase between the incoming clock and the output clock, operable within the range of 10 to 133MHz.

The IDT2308 has two banks of four outputs each that are controlled via two select addresses. By proper selection of input addresses, both banks can be put in tri-state mode. In test mode, the PLL is turned off, and the input clock directly drives the outputs for system testing purposes. In the absence of an input clock, the IDT2308 enters power down, and the outputs are tri-stated. In this mode, the device will draw less than 25µA.

The IDT2308 is available in six unique configurations for both prescaling and multiplication of the Input REF Clock. (See available options table.)

The PLL is closed externally to provide more flexibility by allowing the user to control the delay between the input clock and the outputs.

The IDT2308 is characterized for both Industrial and Commercial operation.

FUNCTIONAL BLOCK DIAGRAM

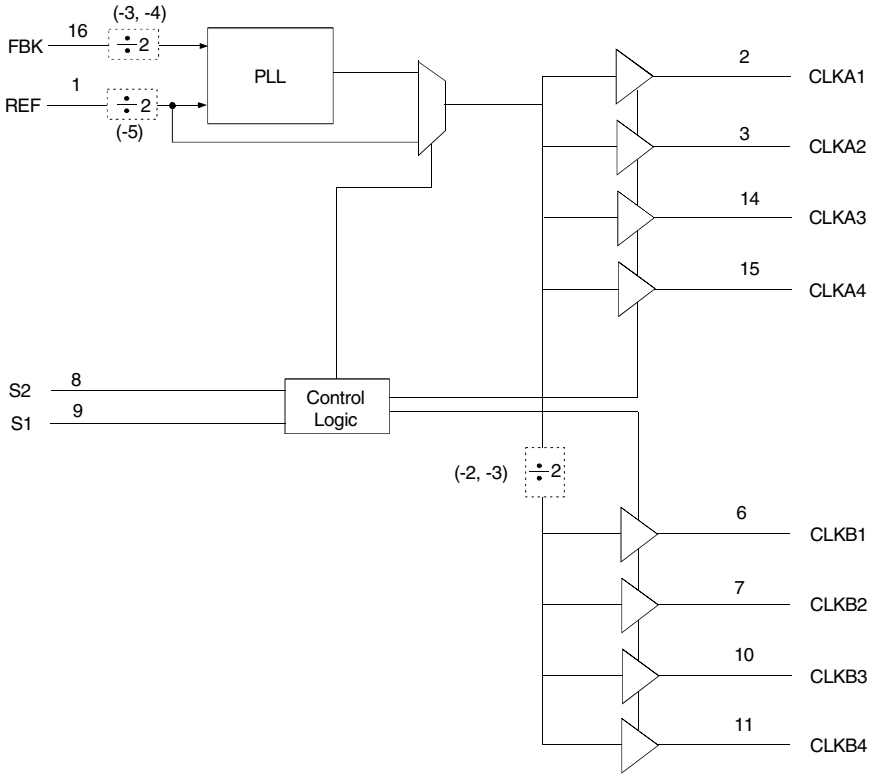

The IDT logo is a registered trademark of Integrated Device Technology, Inc.

© 2006 Integrated Device Technology, Inc.

PIN CONFIGURATION

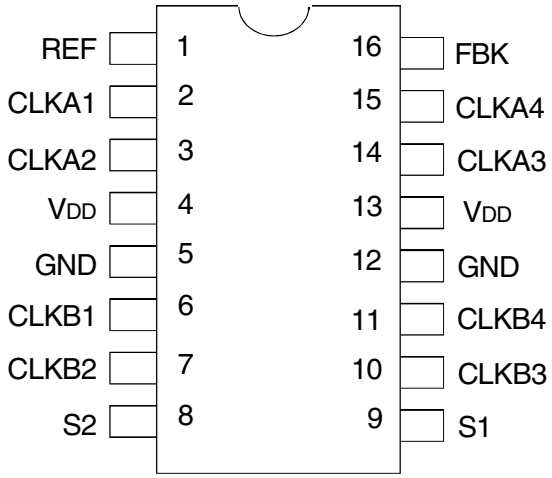

SOIC/ TSSOP
TOP VIEW

PIN DESCRIPTION

	Pin Number	Functional Description
REF (1)	1	Input Reference Clock, 5 Volt Tolerant Input
CLKA1(2)	2	Clock Output for Bank A
CLKA2(2)	3	Clock Output for Bank A
VDD	4	3.3V Supply
GND	5	Ground
CLKB1(2)	6	Clock Output for Bank B
CLKB2(2)	7	Clock Output for Bank B
S2(3)	8	Select Input, Bit 2
S1(3)	9	Select Input, Bit 1
CLKB3(2)	10	Clock Output for Bank B
CLKB4(2)	11	Clock Output for Bank B
GND	12	Ground
VDD	13	3.3V Supply
CLKA3(2)	14	Clock Output for Bank A
CLKA4(2)	15	Clock Output for Bank A
FBK	16	PLL Feedback Input

NOTES:
1. Weak pull down.
2. Weak pull down on all outputs.
3. Weak pull ups on these inputs.

ABSOLUTE MAXIMUM RATINGS(1)

Symbol	Rating	Max.	Unit
V_{DD}	Supply Voltage Range	–0.5 to +4.6	V
V_I (2)	Input Voltage Range (REF)	–0.5 to +5.5	V
V_I	Input Voltage Range (except REF)	–0.5 to V_{DD}+0.5	V
I_{IK} (V_I < 0)	Input Clamp Current	–50	mA
I_{OK} (V_O < 0 or V_O > V_{DD})	Terminal Voltage with Respect to GND (inputs V_{IH} 2.5, V_{IL} 2.5)	±50	mA
I_O (V_O = 0 to V_{DD})	Continuous Output Current	±50	mA
V_{DD} or GND	Continuous Current	±100	mA
T_A = 55°C (in still air)(3)	Maximum Power Dissipation	0.7	W
T_{STG}	Storage Temperature Range	–65 to +150	°C
Operating Temperature	Commercial Temperature Range	0 to +70	°C
Operating Temperature	Industrial Temperature Range	-40 to +85	°C

NOTES:
1. Stresses greater than those listed under ABSOLUTE MAXIMUM RATINGS may cause permanent damage to the device. This is a stress rating only and functional operation of the device at these or any other conditions above those indicated in the operational sections of this specification is not implied. Exposure to absolute maximum rating conditions for extended periods may affect reliability.
2. The input and output negative-voltage ratings may be exceeded if the input and output clamp-current ratings are observed.
3. The maximum package power dissipation is calculated using a junction temperature of 150°C and a board trace length of 750 mils.

APPLICATIONS:

- SDRAM
- Telecom
- Datacom
- PC Motherboards/Workstations
- Critical Path Delay Designs

FUNCTION TABLE[1] SELECT INPUT DECODING

S2	S1	CLK A	CLK B	Output Source	PLL Shut Down
L	L	Tri-State	Tri-State	PLL	Y
L	H	Driven	Tri-State	PLL	N
H	L	Driven	Driven	REF	Y
H	H	Driven	Driven	PLL	N

NOTE:
1. H = HIGH Voltage Level
   L = LOW Voltage Level

AVAILABLE OPTIONS FOR IDT2308

Device	Feedback From	Bank A Frequency	Bank B Frequency
IDT2308-1	Bank A or Bank B	Reference	Reference
IDT2308-1H	Bank A or Bank B	Reference	Reference
IDT2308-2	Bank A	Reference	Reference/2
IDT2308-2	Bank B	2 x Reference	Reference
IDT2308-2H	Bank A	Reference	Reference/2
IDT2308-2H	Bank B	2 x Reference	Reference
IDT2308-3	Bank A	2 x Reference	Reference or $\overline{\text{Reference}}$[1]
IDT2308-3	Bank B	4 x Reference	2 x Reference
IDT2308-4	Bank A or Bank B	2 x Reference	2 x Reference
IDT2308-5H	Bank A or Bank B	Reference/2	Reference/2

NOTE:
1. Output phase is indeterminant (0° or 180° from input clock).

ZERO DELAY AND SKEW CONTROL

To close the feedback loop of the IDT2308, the FBK pin can be driven from any of the eight available output pins. The output driving the FBK pin will be driving a total load of 7pF plus any additional load that it drives. The relative loading of this output (with respect to the remaining outputs) can adjust the input-output delay.

For applications requiring zero input-output delay, all outputs including the one providing feedback should be equally loaded. If input-output delay adjustments are required, use the Output Load Difference Chart to calculate loading differences between the feedback output and remaining outputs. Ensure the outputs are loaded equally, for zero output-output skew.

REF TO CLKA/CLKB DELAY vs. OUTPUT LOAD DIFFERENCE BETWEEN FBK PIN AND CLKA/CLKB PINS

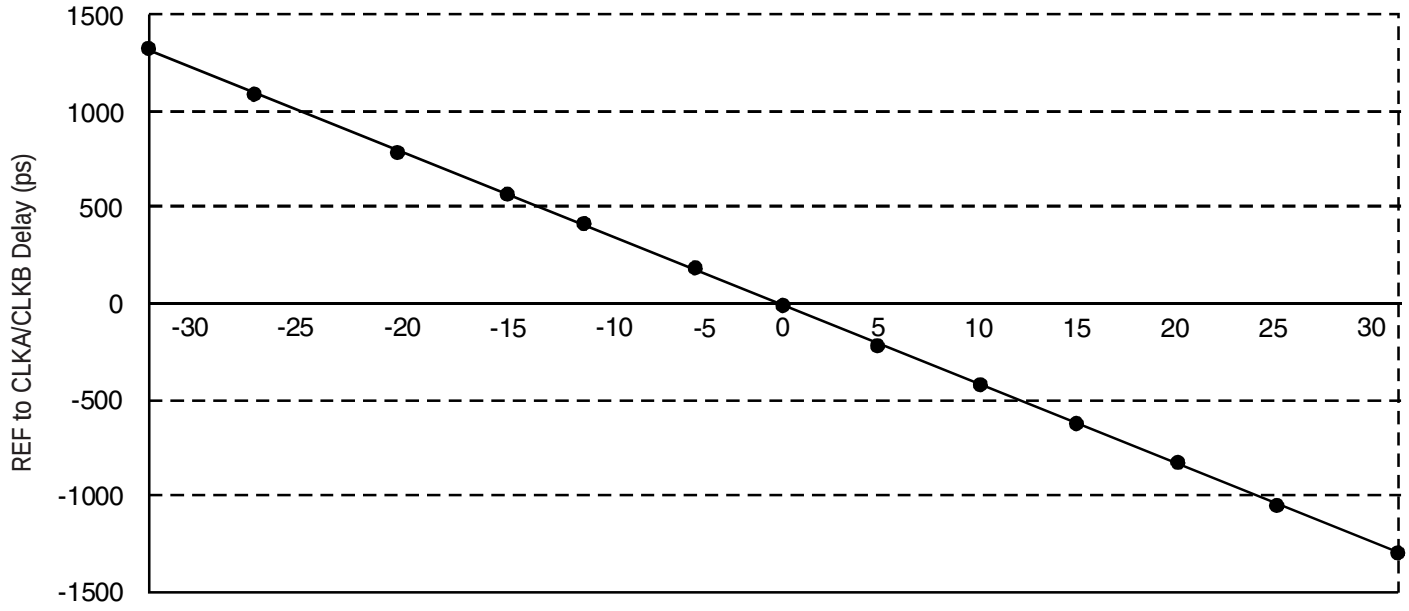

OUTPUT LOAD DIFFERENCE BETWEEN FBK PIN AND CLKA/CLKB PINS (pF)

OPERATING CONDITIONS - COMMERCIAL

Symbol	Parameter	Test Conditions	Min.	Max.	Unit
V_{DD}	Supply Voltage		3	3.6	V
T_A	Operating Temperature (Ambient Temperature)		0	70	°C
C_L	Load Capacitance below 100MHz		—	30	pF
	Load Capacitance from 100MHz to 133MHz		—	15	pF
C_{IN}	Input Capacitance[1]		—	7	pF

NOTE:
1. Applies to both REF and FBK.

DC ELECTRICAL CHARACTERISTICS - COMMERCIAL

Symbol	Parameter	Conditions		Min.	Typ.[1]	Max.	Unit
V_{IL}	Input LOW Voltage Level			—	—	0.8	V
V_{IH}	Input HIGH Voltage Level			2	—	—	V
I_{IL}	Input LOW Current	V_{IN} = 0V		—	—	50	µA
I_{IH}	Input HIGH Current	V_{IN} = V_{DD}		—	—	100	µA
V_{OL}	Output LOW Voltage	I_{OL} = 8mA (-1, -2, -3, -4) I_{OL} = 12mA (-1H, -2H, -5H)		—	—	0.4	V
V_{OH}	Output HIGH Voltage	I_{OH} = -8mA (-1, -2, -3, -4) I_{OH} = -12mA (-1H, -2H, -5H)		2.4	—	—	V
I_{DD_PD}	Power Down Current	REF = 0MHz (S2 = S1 = H)		—	—	12	µA
I_{DD}	Supply Current	Unloaded Outputs Select Inputs at V_{DD} or GND	100MHz CLKA (-1, -2, -3, -4)	—	—	45	mA
			100MHz CLKA (-1H, -2H, -5H)	—	—	70	
			66MHz CLKA (-1, -2, -3, -4)	—	—	32	
			66MHz CLKA (-1H, -2H, -5H)	—	—	50	
			33MHz CLKA (-1, -2, -3, -4)	—	—	18	
			33MHz CLKA (-1H, -2H, -5H)	—	—	30	

SWITCHING CHARACTERISTICS - COMMERCIAL

Symbol	Parameter	Conditions	Min.	Typ.	Max.	Unit
t_1	Output Frequency	30pF Load, all devices	10	—	100	MHz
t_1	Output Frequency	20pF Load, -1H, -2H, -5H Devices[1]	10	—	133.3	MHz
t_1	Output Frequency	15pF Load, -1, -2, -3, -4 devices	10	—	133.3	MHz
	Duty Cycle = $t_2 \div t_1$ (-1, -2, -3, -4, -1H, -2H, -5H)	Measured at 1.4V, F_{OUT} = 66.66MHz 30pF Load	40	50	60	%
	Duty Cycle = $t_2 \div t_1$ (-1, -2, -3, -4, -1H, -2H, -5H)	Measured at 1.4V, F_{OUT} = 50MHz 15pF Load	45	50	55	%
t_3	Rise Time (-1, -2, -3, -4)	Measured between 0.8V and 2V, 30pF Load	—	—	2.2	ns
t_3	Rise Time (-1, -2, -3, -4)	Measured between 0.8V and 2V, 15pF Load	—	—	1.5	ns
t_3	Rise Time (-1H, -2H, -5H)	Measured between 0.8V and 2V, 30pF Load	—	—	1.5	ns
t_4	Fall Time (-1, -2, -3, -4)	Measured between 0.8V and 2V, 30pF Load	—	—	2.2	ns
t_4	Fall Time (-1, -2, -3, -4)	Measured between 0.8V and 2V, 15pF Load	—	—	1.5	ns
t_4	Fall Time (-1H, -5H)	Measured between 0.8V and 2V, 30pF Load	—	—	1.25	ns
t_5	Output to Output Skew on same Bank (-1, -2, -3, -4)	All outputs equally loaded	—	—	200	ps
	Output to Output Skew (-1H, -2H, -5H)	All outputs equally loaded	—	—	200	ps
	Output Bank A to Output Bank B (-1, -4, -2H, -5H)	All outputs equally loaded	—	—	200	ps
	Output Bank A to Output Bank B Skew (-2, -3)	All outputs equally loaded	—	—	400	ps
t_6	Delay, REF Rising Edge to FBK Rising Edge	Measured at $V_{DD}/2$	—	0	±250	ps
t_7	Device to Device Skew	Measured at $V_{DD}/2$ on the FBK pins of devices	—	0	700	ps
t_8	Output Slew Rate	Measured between 0.8V and 2V on -1H, -2H, -5H device using Test Circuit 2	1	—	—	V/ns
t_J	Cycle to Cycle Jitter (-1, -1H, -4, -5H)	Measured at 66.67 MHz, loaded outputs, 15pF Load	—	—	200	ps
		Measured at 66.67 MHz, loaded outputs, 30pF Load	—	—	200	
		Measured at 133.3 MHz, loaded outputs, 15pF Load	—	—	100	
t_J	Cycle to Cycle Jitter (-2, -2H, -3)	Measured at 66.67 MHz, loaded outputs, 30pF Load	—	—	400	ps
		Measured at 66.67 MHz, loaded outputs, 15pF Load	—	—	400	
t_{LOCK}	PLL Lock Time	Stable Power Supply, valid clocks presented on REF and FBK pins	—	—	1	ms

NOTE:
1. IDT2308-5H has maximum input frequency of 133.33 MHz and maximum output of 66.67MHz.

OPERATING CONDITIONS- INDUSTRIAL

Symbol	Parameter	Test Conditions	Min.	Max.	Unit
V_{DD}	Supply Voltage		3	3.6	V
T_A	Operating Temperature (Ambient Temperature)		-40	+85	°C
C_L	Load Capacitance below 100MHz		—	30	pF
	Load Capacitance from 100MHz to 133MHz		—	15	pF
C_{IN}	Input Capacitance[1]		—	7	pF

NOTE:
1. Applies to both REF and FBK.

DC ELECTRICAL CHARACTERISTICS - INDUSTRIAL

Symbol	Parameter	Conditions		Min.	Typ.[1]	Max.	Unit
V_{IL}	Input LOW Voltage Level			—	—	0.8	V
V_{IH}	Input HIGH Voltage Level			2	—	—	V
I_{IL}	Input LOW Current	V_{IN} = 0V		—	—	50	µA
I_{IH}	Input HIGH Current	V_{IN} = V_{DD}		—	—	100	µA
V_{OL}	Output LOW Voltage	I_{OL} = 8mA (-1, -2, -3, -4) I_{OL} = 12mA (-1H, -2H, -5H)		—	—	0.4	V
V_{OH}	Output HIGH Voltage	I_{OH} = -8mA (-1, -2, -3, -4) I_{OH} = -12mA (-1H, -2H, -5H)		2.4	—	—	V
I_{DD_PD}	Power Down Current	REF = 0MHz (S2 = S1 = H)		—	—	25	µA
I_{DD}	Supply Current	Unloaded Outputs Select Inputs at V_{DD} or GND	100MHz CLKA (-1, -2, -3, -4)	—	—	45	mA
			100MHz CLKA (-1H, -2H, -5H)	—	—	70	
			66MHz CLKA (-1, -2, -3, -4)	—	—	32	
			66MHz CLKA (-1H, -2H, -5H)	—	—	50	
			33MHz CLKA (-1, -2, -3, -4)	—	—	18	
			33MHz CLKA (-1H, -2H, -5H)	—	—	30	

SWITCHING CHARACTERISTICS - INDUSTRIAL

Symbol	Parameter	Conditions	Min.	Typ.	Max.	Unit
t_1	Output Frequency	30pF Load, all devices	10	—	100	MHz
t_1	Output Frequency	20pF Load, -1H, -2H, -5H Devices(1)	10	—	133.3	MHz
t_1	Output Frequency	15pF Load, -1, -2, -3, -4 devices	10	—	133.3	MHz
	Duty Cycle = $t_2 \div t_1$ (-1, -2, -3, -4, -1H, -2H, -5H)	Measured at 1.4V, F_{OUT} = 66.66MHz 30pF Load	40	50	60	%
	Duty Cycle = $t_2 \div t_1$ (-1, -2, -3, -4, -1H, -2H, -5H)	Measured at 1.4V, F_{OUT} = 50MHz 15pF Load	45	50	55	%
t_3	Rise Time (-1, -2, -3, -4)	Measured between 0.8V and 2V, 30pF Load	—	—	2.2	ns
t_3	Rise Time (-1, -2, -3, -4)	Measured between 0.8V and 2V, 15pF Load	—	—	1.5	ns
t_3	Rise Time (-1H, -2H, -5H)	Measured between 0.8V and 2V, 30pF Load	—	—	1.5	ns
t_4	Fall Time (-1, -2, -3, -4)	Measured between 0.8V and 2V, 30pF Load	—	—	2.5	ns
t_4	Fall Time (-1, -2, -3, -4)	Measured between 0.8V and 2V, 15pF Load	—	—	1.5	ns
t_4	Fall Time (-1H, -5H)	Measured between 0.8V and 2V, 30pF Load	—	—	1.25	ns
t_5	Output to Output Skew on same Bank (-1, -2, -3, -4)	All outputs equally loaded	—	—	200	ps
	Output to Output Skew (-1H, -2H, -5H)	All outputs equally loaded	—	—	200	ps
	Output Bank A to Output Bank B (-1, -4, -2H, -5H)	All outputs equally loaded	—	—	200	ps
	Output Bank A to Output Bank B Skew (-2, -3)	All outputs equally loaded	—	—	400	ps
t_6	Delay, REF Rising Edge to FBK Rising Edge	Measured at $V_{DD}/2$	—	0	±250	ps
t_7	Device to Device Skew	Measured at $V_{DD}/2$ on the FBK pins of devices	—	0	700	ps
t_8	Output Slew Rate	Measured between 0.8V and 2V on -1H, -2H, -5H device using Test Circuit 2	1	—	—	V/ns
t_J	Cycle to Cycle Jitter (-1, -1H, -4, -5H)	Measured at 66.67 MHz, loaded outputs, 15pF Load	—	—	200	ps
		Measured at 66.67 MHz, loaded outputs, 30pF Load	—	—	200	
		Measured at 133.3 MHz, loaded outputs, 15pF Load	—	—	100	
t_J	Cycle to Cycle Jitter (-2, -2H, -3)	Measured at 66.67 MHz, loaded outputs, 30pF Load	—	—	400	ps
		Measured at 66.67 MHz, loaded outputs, 15pF Load	—	—	400	
t_{LOCK}	PLL Lock Time	Stable Power Supply, valid clocks presented on REF and FBK pins	—	—	1	ms

NOTE:
1. IDT2308-5H has maximum input frequency of 133.33 MHz and maximum output of 66.67MHz.

SWITCHING WAVEFORMS

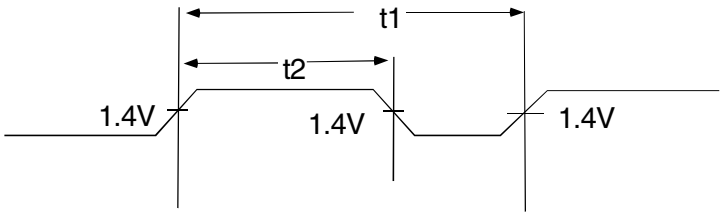

Duty Cycle Timing

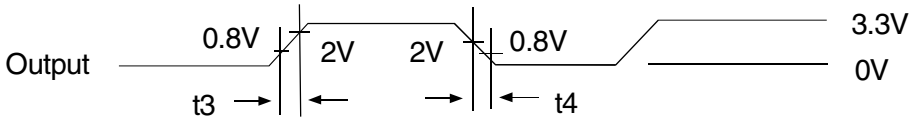

All Outputs Rise/Fall Time

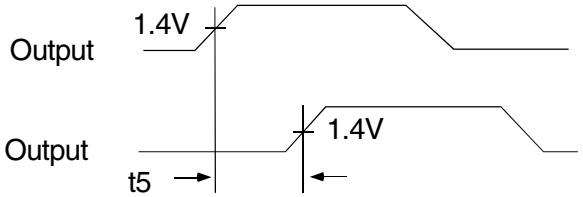

Output to Output Skew

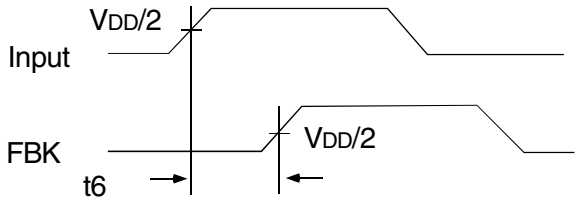

Input to Output Propagation Delay

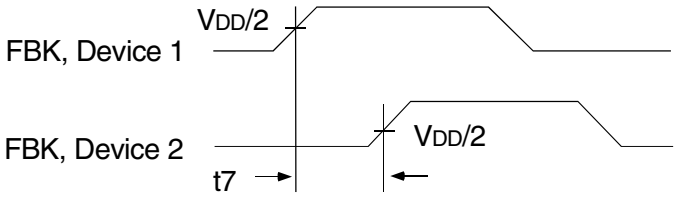

Device to Device Skew

TYPICAL DUTY CYCLE(1) AND IDD TRENDS(2) FOR IDT2308-1, 2, 3, AND 4

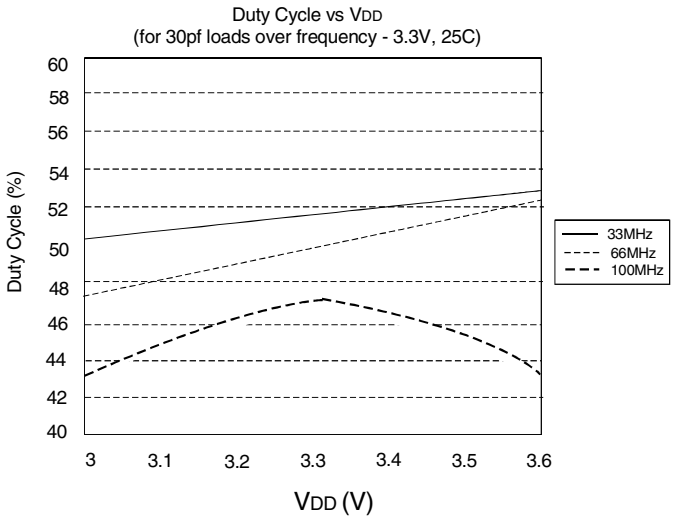

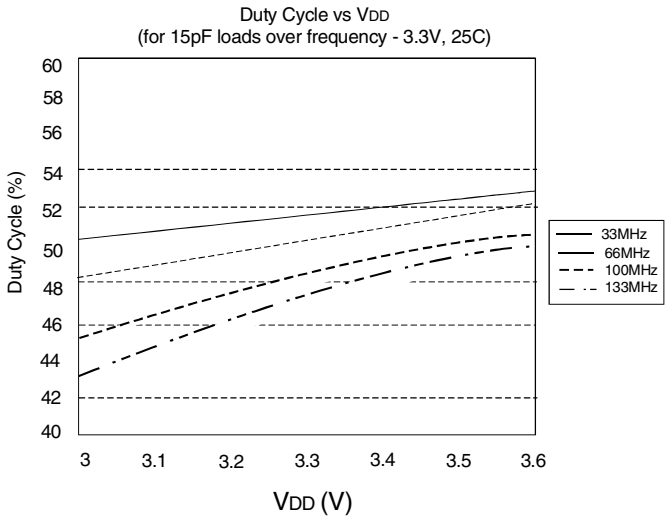

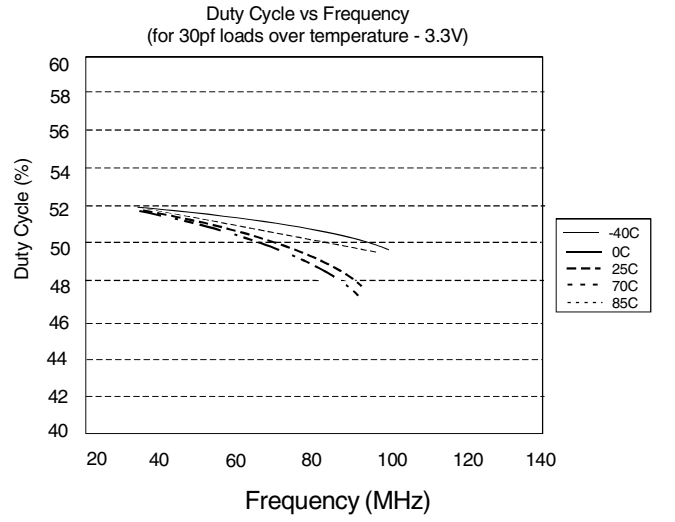

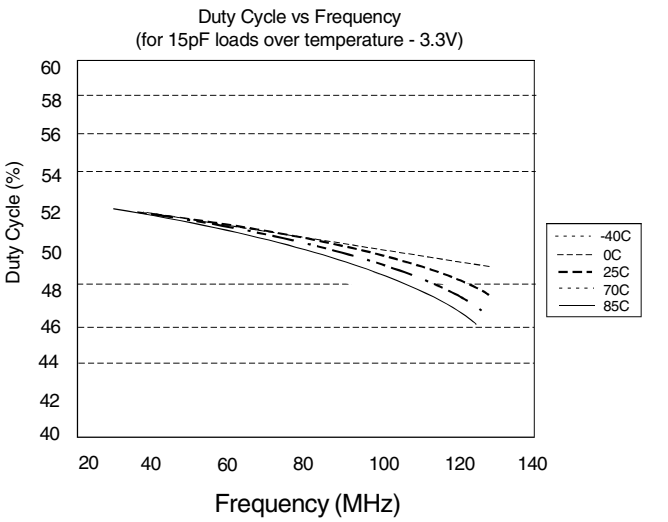

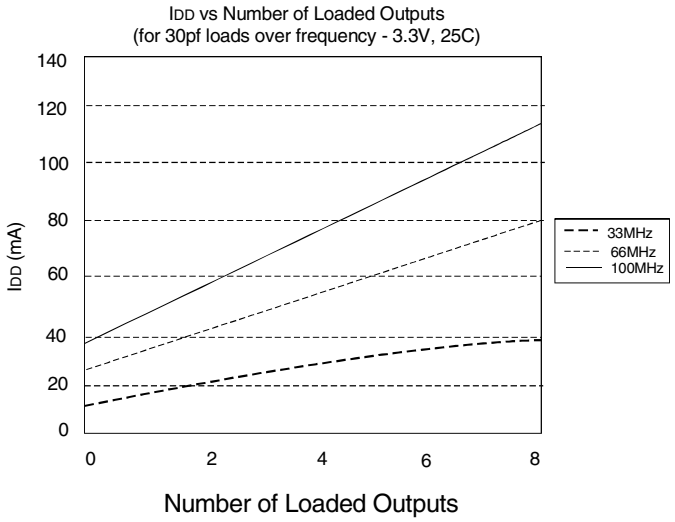

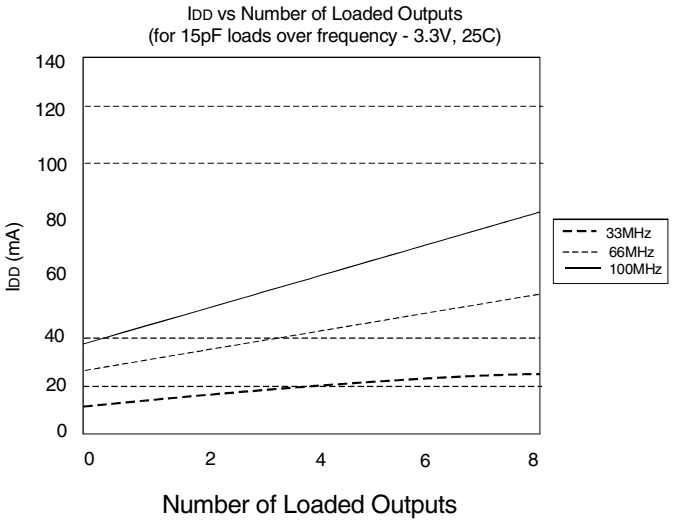

NOTES:
1. Duty Cycle is taken from typical chip measured at 1.4V.
2. IDD data is calculated from IDD = ICORE + nCVf, where ICORE is the Unloaded Current (n = Number of Outputs; C = Capacitance Load per Output (F); V = Voltage Supply(V); f = Frequency (Hz).

TYPICAL DUTY CYCLE(1) AND IDD TRENDS(2) FOR IDT2308-1H, -2H, AND -5H

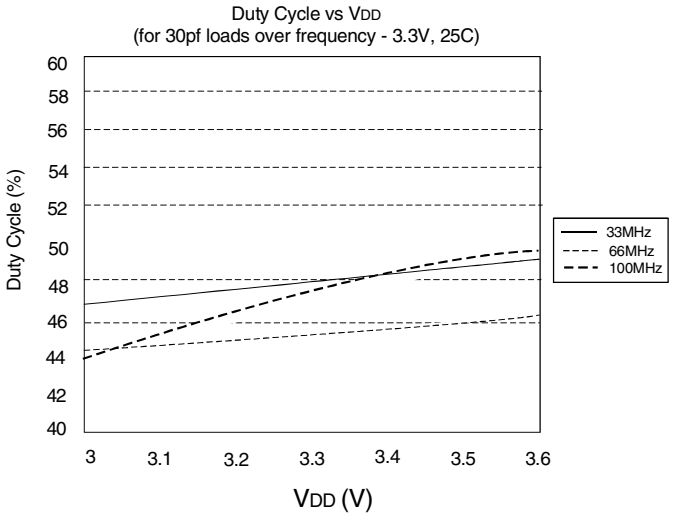

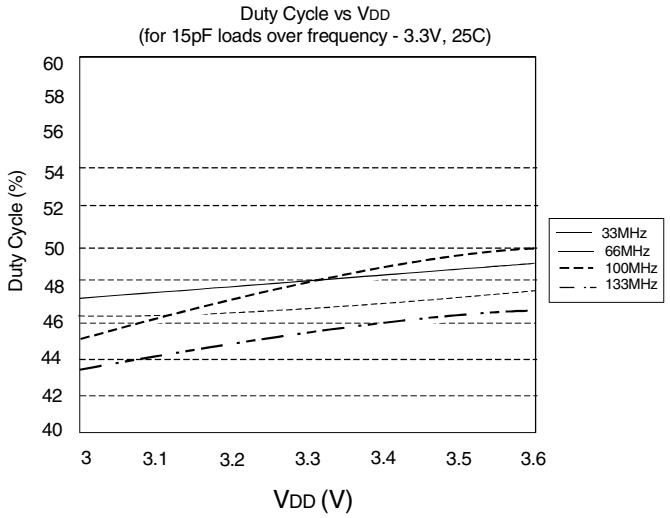

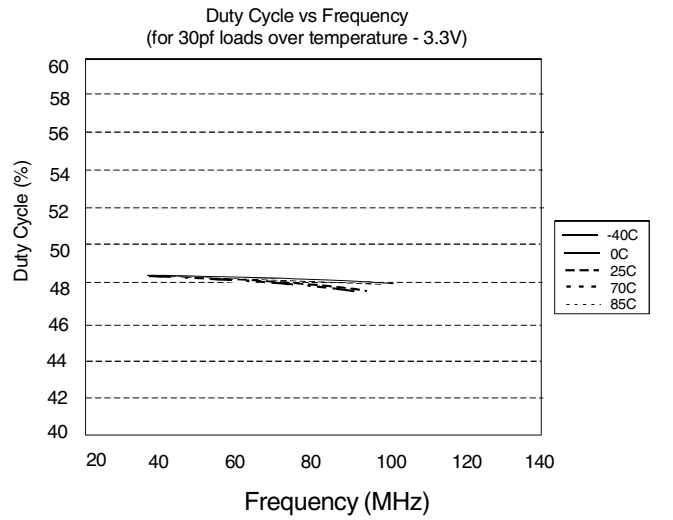

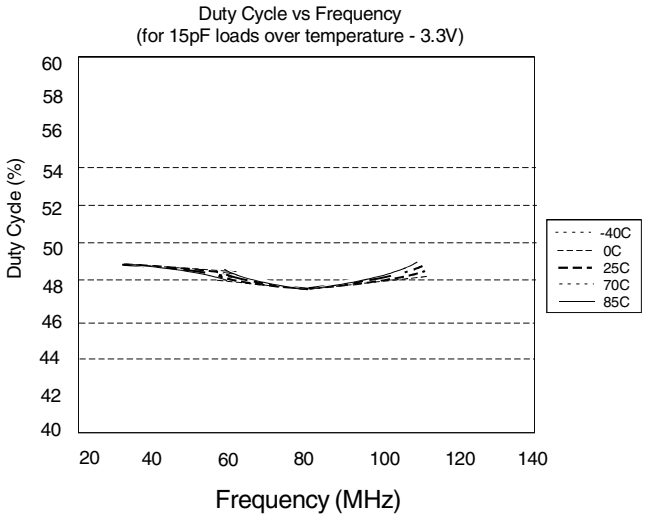

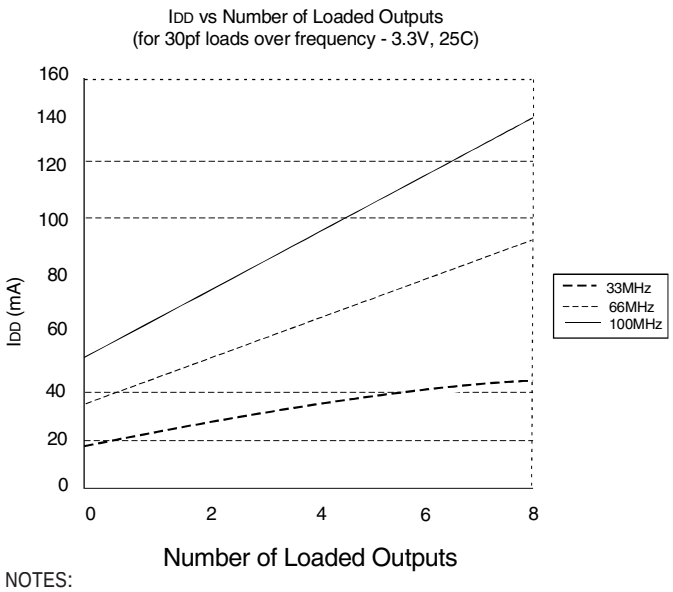

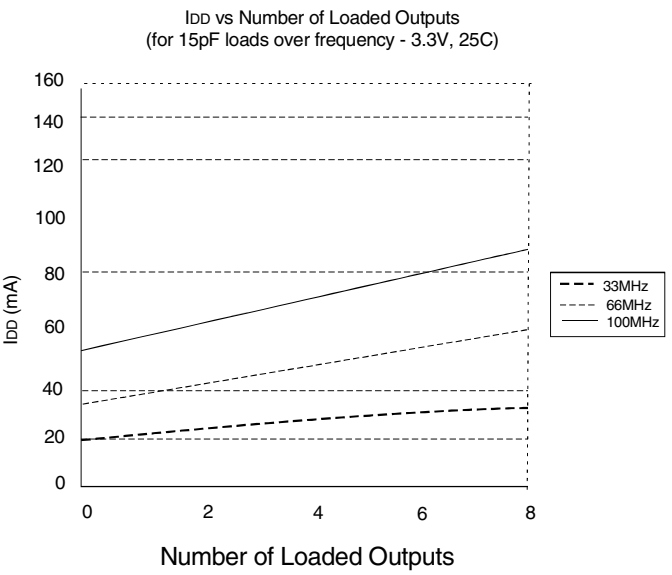

NOTES:
1. Duty Cycle is taken from typical chip measured at 1.4V.
2. IDD data is calculated from IDD = ICORE + nCVf, where ICORE is the Unloaded Current (n = Number of Outputs; C = Capacitance Load per Output (F); V = Voltage Supply(V); f = Frequency (Hz).

TEST CIRCUITS

TEST CIRCUIT 1

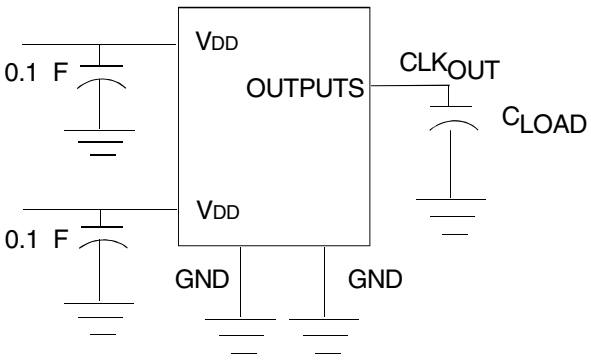

Test Circuit for all Parameters Except t8

TEST CIRCUIT 1

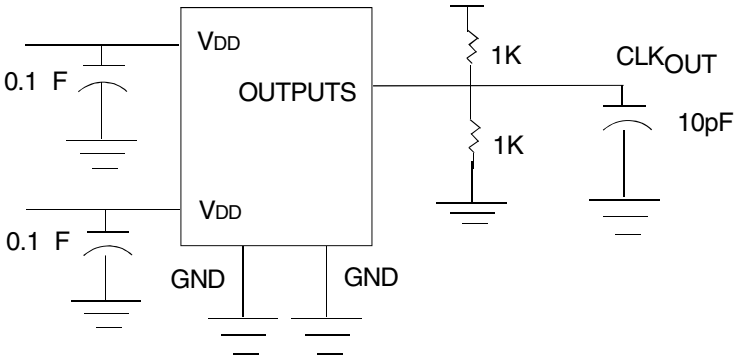

Test Circuit for t8, Output Slew Rate On -1H, -2H, and -5H Device

ORDERING INFORMATION

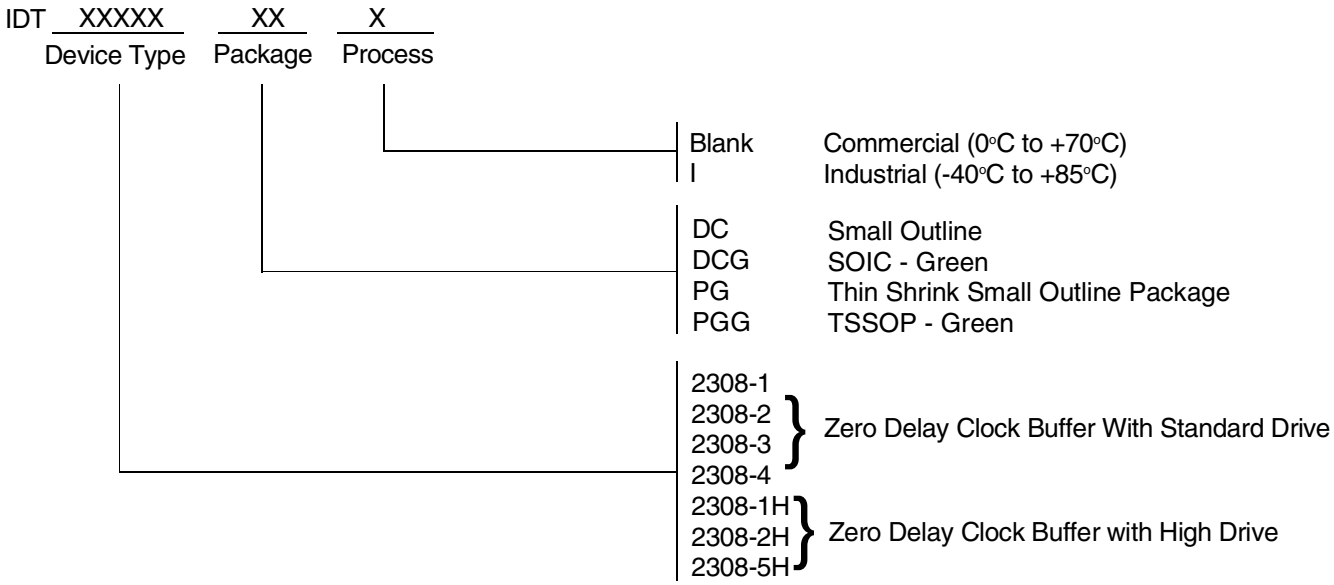

NOTE: EOL for non-green parts to occur on 5/13/10 per PDN U-09-01

Ordering Code	Package Type	Operating Range
IDT2308-1DC*	16-Pin SOIC	Commercial
IDT2308-1DCI*	16-Pin SOIC	Industrial
IDT2308-1HDC*	16-Pin SOIC	Commercial
IDT2308-1HDCG	16-Pin SOIC	Commercial
IDT2308-1HDCI*	16-Pin SOIC	Industrial
IDT2308-1HPG	16-Pin TSSOP	Commercial
IDT2308-1HPGI	16-Pin TSSOP	Industrial
IDT2308-2DC*	16-Pin SOIC	Commercial
IDT2308-2DCG	16-Pin SOIC	Commercial
IDT2308-2DCI*	16-Pin SOIC	Industrial
IDT2308-2DCGI	16-Pin SOIC	Industrial
IDT2308-2HDC*	16-Pin SOIC	Commercial
IDT2308-2HDCI*	16-Pin SOIC	Industrial
IDT2308-3DC*	16-Pin SOIC	Commercial
IDT2308-3DCI*	16-Pin SOIC	Industrial
IDT2308-4DC*	16-Pin SOIC	Commercial
IDT2308-4DCI*	16-Pin SOIC	Industrial
IDT2308-5HDC*	16-Pin SOIC	Commercial
IDT2308-5HDCI*	16-Pin SOIC	Industrial
IDT2308-5HPG	16-Pin TSSOP	Commercial
IDT2308-5HPGI	16-Pin TSSOP	Industrial

CORPORATE HEADQUARTERS
6024 Silver Creek Valley Road
San Jose, CA 95138

for SALES:
800-345-7015 or 408-284-8200
fax: 408-284-2775
www.idt.com

for Tech Support:
clockhelp@idt.com