NXP Semiconductors
Data Sheet: Technical Data

Document Number: IMX6SXCEC
Rev. 4, 11/2018

MCIMX6XxExxxxxB
MCIMX6XxExxxxxC

i.MX 6SoloX Applications Processors for Consumer Products

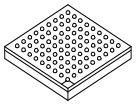

Package Information
Plastic Package
BGA 19 x 19 mm, 0.8 mm pitch
BGA 17 x 17 mm, 0.8 mm pitch
BGA 14 x 14 mm, 0.65 mm pitch

Ordering Information
See Table 1 on page 3

1 Introduction

The i.MX 6SoloX processors represent NXP Semiconductor's latest achievement in integrated multimedia-focused products offering high performance processing with a high degree of functional integration, targeted towards the growing market of connected devices.

The i.MX 6SoloX processor features NXP's advanced implementation of the single Arm® Cortex®-A9 core, which operates at speeds of up to 1 GHz, in addition to the Arm Cortex-M4 core, which operates at speeds of up to 227 MHz. This type of heterogeneous multicore architecture provides greater levels of system integration, smart low-power system awareness, and fast real-time responsiveness. The i.MX 6SoloX includes a GPU processor capable of supporting 2D and 3D operations, a wide range of display and connectivity options, and integrated power management. Each processor provides a 32-bit DDR3/DDR3L/LPDDR2-800 memory interface and a number of other interfaces for connecting peripherals, such as WLAN, Bluetooth™, GPS, displays, and camera sensors.

1 Introduction . . . 1
1.1 Ordering Information . . . 3
1.2 Features . . . 5
2 Architectural Overview . . . 10
2.1 Block Diagram . . . 10
3 Modules List . . . 11
3.1 Special Signal Considerations . . . 19
3.2 Recommended Connections for Unused Analog Interfaces . . . 21
4 Electrical Characteristics . . . 21
4.1 Chip-Level Conditions . . . 21
4.2 Power Supplies Requirements and Restrictions . . . 34
4.3 Integrated LDO Voltage Regulator Parameters . . . 35
4.4 PLL Electrical Characteristics . . . 37
4.5 On-Chip Oscillators . . . 38
4.6 I/O DC Parameters . . . 39
4.7 I/O AC Parameters . . . 44
4.8 Output Buffer Impedance Parameters . . . 47
4.9 System Modules Timing . . . 50
4.10 Multi-mode DDR Controller (MMDC) . . . 62
4.11 General-Purpose Media Interface (GPMI) Timing . . . 63
4.12 External Peripheral Interface Parameters . . . 71
4.13 A/D Converter . . . 114
5 Boot Mode Configuration . . . 118
5.1 Boot Mode Configuration Pins . . . 118
5.2 Boot Device Interface Allocation . . . 120
6 Package Information and Contact Assignments . . . 128
6.1 i.MX 6SoloX Signal Availability by Package . . . 128
6.2 Signals with Different States During Reset and After Reset . . . 130
6.3 19x19 mm Package Information . . . 131
6.4 17x17 mm Package Information . . . 150
6.5 14x14 mm Package Information . . . 185
7 Revision History . . . 201

NXP Reserves the right to change the production detail specifications as may be required to permit improvements in the design of its products

The i.MX 6SoloX processors are specifically useful for applications such as:

- Graphics rendering for Human Machine Interfaces (HMI)
- Audio playback
- Connected devices
- Access control panels
- Human Machine Interfaces (HMI)
- Portable medical and health care
- IP phones
- Smart appliances
- Home energy management systems

The features of the i.MX 6SoloX processors include:

- Dual-core architecture with one Arm Cortex-A9 processor plus one Arm Cortex-M4 processor—Dual-core architecture enables the device to run an open operating system like Linux on the Cortex-A9 core and an RTOS like MQX™ or FreeRTOS™ on the Cortex-M4 core. The Cortex-M4 core is standard on all i.MX 6SoloX processors.
- Multilevel memory system—The multilevel memory system of each processor is based on the L1 instruction and data caches, L2 cache, and internal and external memory. The processors support many types of external memory devices, including DDR3, low voltage DDR3, LPDDR2, NOR Flash, NAND Flash (MLC and SLC), OneNAND, Quad SPI, and managed NAND, including eMMC up to rev 4.4/4.41/4.5.
- Smart speed technology—Power management implemented throughout the IC that enables multimedia features and peripherals to consume minimum power in both active and various low power modes.
- Dynamic voltage and frequency scaling—The processors improve the power efficiency of devices by scaling the voltage and frequency to optimize performance.
- Multimedia powerhouse—The multimedia performance of each processor is enhanced by a multilevel cache system, NEON™ MPE (Media Processor Engine) co-processor, a programmable smart DMA (SDMA) controller, and an asynchronous sample rate converter.
- 2x Gigabit Ethernet with AVB—2x 10/100/1000 Mbps Gigabit Ethernet controllers with support for Audio Video Bridging (AVB) for reliable, high-quality, low-latency multimedia streaming.
- Human-machine interface—Each processor provides a single integrated graphics processing unit that supports an OpenGL ES 2.0 and OpenVG 1.1 3D and 2D graphics accelerator. In addition, each processor provides up to two separate display interfaces (parallel display and LVDS display) and a CMOS sensor interface (parallel).
- Interface flexibility—Each processor supports connections to a variety of interfaces: High-speed USB on-the-go with PHY, high-speed USB host with PHY, High-Speed Inter-Chip USB, multiple expansion card ports (high-speed MMC/SDIO host and other), 2 Gigabit Ethernet controllers with support for Ethernet AVB, PCIe-II, two 12-bit ADC modules with 4 dedicated single-ended inputs, two CAN ports, ESAI audio interface, and a variety of other popular interfaces (such as UART, I^2C, and I^2S serial audio).

- Advanced security—The processors deliver hardware-enabled security features that enable secure e-commerce, digital rights management (DRM), information encryption, secure boot, and secure software downloads. The security features are discussed in detail in the *i.MX 6SoloX Security Reference Manual* (IMX6XSRM).
- Integrated power management—The processors integrate linear regulators and internally generate voltage levels for different domains. This significantly simplifies system power management structure.

For a comprehensive list of the i.MX 6SoloX features, see Section 1.2, "Features".

1.1 Ordering Information

Table 1 provides examples of orderable sample part numbers covered by this data sheet.

Table 1. Ordering Information

Part Number	Options	Mask Set	Cortex-A9 Speed[1]	Cortex-M4 Speed	Qualification Tier	Junction Temperature Range	Package
MCIMX6X1EVK10AB	Features not supported: - 2D&3D GPU - PCIe - LVDS - MLB	2N19K or 3N19K	1 GHz	227 MHz	Extended Commercial	-20 to +105°C	14x14NP (NP No PCIe) Package code "VK" 14mm x 14mm 0.65pitch Map BGA
MCIMX6X1EVK10AC	Features not supported: - 2D&3D GPU - PCIe - LVDS - MLB	4N19K	1 GHz	227 MHz	Extended Commercial	-20 to +105°C	14x14NP (NP No PCIe) Package code "VK" 14mm x 14mm 0.65pitch Map BGA
MCIMX6X3EVK10AB	Features not supported: - PCIe - LVDS - MLB	2N19K or 3N19K	1 GHz	227 MHz	Extended Commercial	-20 to +105°C	14x14NP (NP=No PCIe) Package code "VK" 14mm x 14mm 0.65pitch Map BGA
MCIMX6X3EVK10AC	Features not supported: - PCIe - LVDS - MLB	4N19K	1 GHz	227 MHz	Extended Commercial	-20 to +105°C	14x14NP (NP=No PCIe) Package code "VK" 14mm x 14mm 0.65pitch Map BGA
MCIMX6X1EVO10AB	Features not supported: - 2D&3D GPU - PCIe - LVDS - MLB	2N19K or 3N19K	1 GHz	227 MHz	Extended Commercial	-20 to +105°C	17x17NP (NP=No PCIe) Package code "VO" 17mm x 17mm 0.8pitch Map BGA

Table 1. Ordering Information (continued)

Part Number	Options	Mask Set	Cortex-A9 Speed[1]	Cortex-M4 Speed	Qualification Tier	Junction Temperature Range	Package
MCIMX6X1EVO10AC	Features not supported: - 2D&3D GPU - PCIe - LVDS - MLB	4N19K	1 GHz	227 MHz	Extended Commercial	-20 to +105°C	17x17NP (NP=No PCIe) Package code “VO” 17mm x 17mm 0.8pitch Map BGA
MCIMX6X3EVO10AB	Features not supported: - PCIe - LVDS - MLB	2N19K or 3N19K	1 GHz	227 MHz	Extended Commercial	-20 to +105°C	17x17NP (NP = No PCIe) Package code “VO” 17mm x 17mm 0.8pitch Map BGA
MCIMX6X3EVO10AC	Features not supported: - PCIe - LVDS - MLB	4N19K	1 GHz	227 MHz	Extended Commercial	-20 to +105°C	17x17NP (NP = No PCIe) Package code “VO” 17mm x 17mm 0.8pitch Map BGA
MCIMX6X2EVN10AB	Features not supported: - 2D&3D GPU - LVDS - MLB	2N19K or 3N19K	1 GHz	227 MHz	Extended Commercial	-20 to +105°C	17x17WP (WP = With PCIe) Package code “VN” 17mm x 17mm 0.8pitch Map BGA
MCIMX6X2EVN10AC	Features not supported: - 2D&3D GPU - LVDS - MLB	4N19K	1 GHz	227 MHz	Extended Commercial	-20 to +105°C	17x17WP (WP = With PCIe) Package code “VN” 17mm x 17mm 0.8pitch Map BGA
MCIMX6X3EVN10AB	Features not supported: - LVDS - MLB	2N19K or 3N19K	1 GHz	227 MHz	Extended Commercial	-20 to +105°C	17x17WP (WP = With PCIe) Package code “VN” 17mm x 17mm 0.8pitch Map BGA
MCIMX6X3EVN10AC	Features not supported: - LVDS - MLB	4N19K	1 GHz	227 MHz	Extended Commercial	-20 to +105°C	17x17WP (WP = With PCIe) Package code “VN” 17mm x 17mm 0.8pitch Map BGA
MCIMX6X4EVM10AB	Features not supported: - MLB	2N19K or 3N19K	1 GHz	227 MHz	Extended Commercial	-20 to +105°C	19x19 Package code “VM” 19mm x 19mm 0.8pitch Map BGA
MCIMX6X4EVM10AC	Features not supported: - MLB	4N19K	1 GHz	227 MHz	Extended Commercial	-20 to +105°C	19x19 Package code “VM” 19mm x 19mm 0.8pitch Map BGA

[1] If a 24 MHz input clock is used (required for USB), the maximum Cortex-A9 speed for 1 GHz speed grade is limited to 996 MHz and the maximum Cortex-A9 speed for 800 MHz speed grade is limited to 792 MHz.

Figure 1 describes the part number nomenclature so that the users can identify the characteristics of the specific part number they have (for example, cores, frequency, temperature grade, fuse options, and silicon

revision). The primary characteristic which describes which data sheet applies to a specific part is the temperature grade (junction) field.

- The i.MX 6SoloX Automotive and Infotainment Applications Processors data sheet (IMX6SXAEC) covers parts listed with an “A (Automotive temp)”
- The i.MX 6SoloX Applications Processors for Consumer Products data sheet (IMX6SXCEC) covers parts listed with a “D (Commercial temp)” or “E (Extended Commercial temp)”
- The i.MX 6SoloX Applications Processors for Industrial Products data sheet (IMX6SXIEC) covers parts listed with “C (Industrial temp)”

Ensure to have the proper data sheet for specific part by verifying the temperature grade (junction) field and matching it to the proper data sheet. If there will be any questions, visit see the web page nxp.com/imx6series or contact a NXP representative for details.

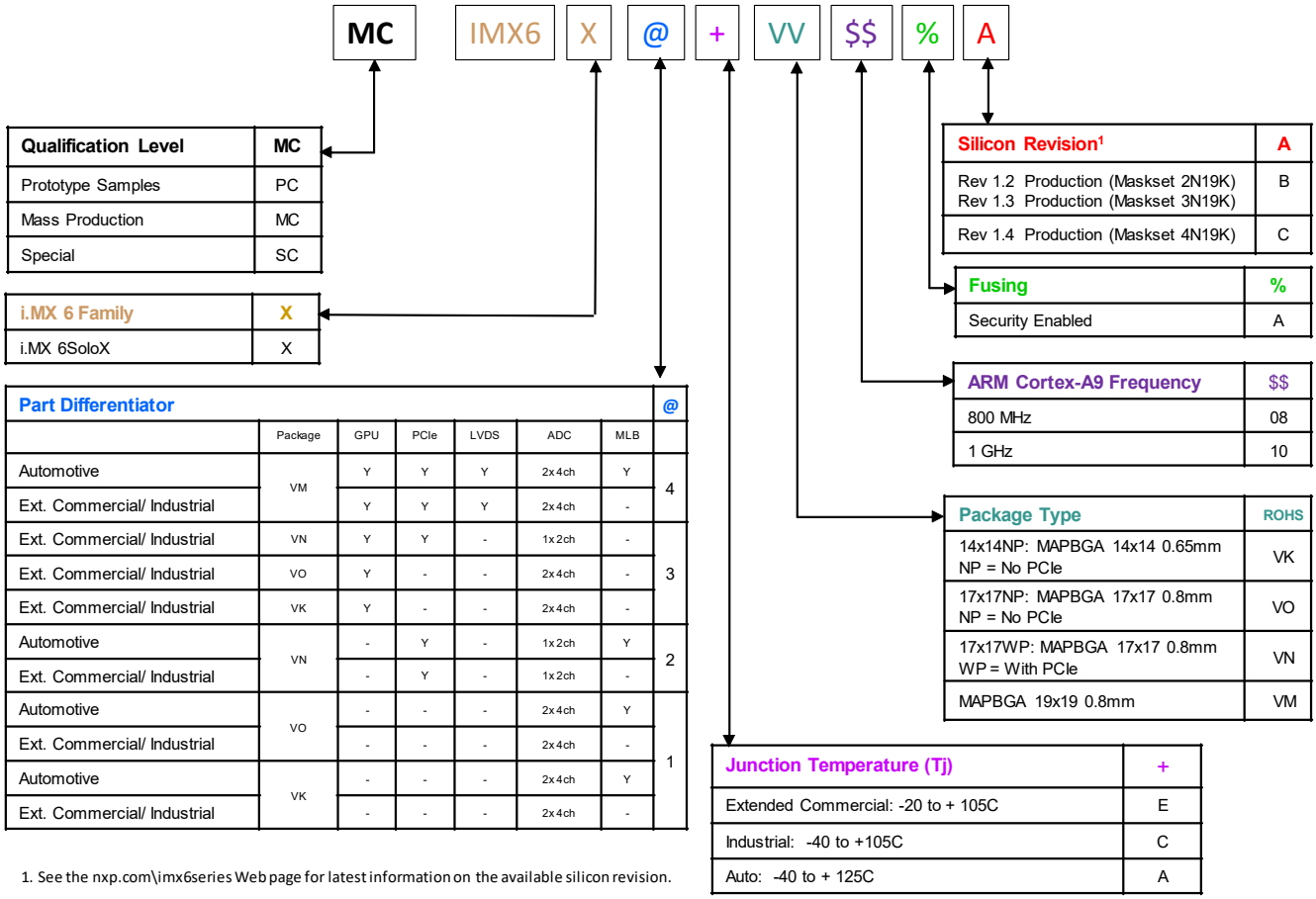

Figure 1. Part Number Nomenclature—i.MX 6SoloX

1.2 Features

The i.MX 6SoloX processors are based on the Arm Cortex-A9 MPCore™ platform, which has the following features:

- Supports single Arm Cortex-A9 MPCore processor (with TrustZone)
- The core configuration is symmetric, where each core includes:

  - 32 KByte L1 Instruction Cache
  - 32 KByte L1 Data Cache
  - Private Timer and Watchdog
  - Cortex-A9 NEON MPE (Media Processing Engine) coprocessor

The Arm Cortex-A9 MPCore complex includes:

- General Interrupt Controller (GIC) with 128 interrupt support
- Global Timer
- Snoop Control Unit (SCU)
- 256 KB unified I/D L2 cache:
- Two Master AXI bus interfaces output of L2 cache
- Frequency of the core (including NEON coprocessor and L1 cache), as per Table 10, “Operating Ranges,” on page 27.
- NEON MPE coprocessor
  - SIMD Media Processing Architecture
  - NEON register file with 32x64-bit general-purpose registers
  - NEON Integer execute pipeline (ALU, Shift, MAC)
  - NEON dual, single-precision floating point execute pipeline (FADD, FMUL)
  - NEON load/store and permute pipeline
  - 32 double-precision VFPv3 floating point registers

The Arm Cortex-M4 platform:

- Cortex-M4 CPU core
- MPU (Memory Protection Unit)
- FPU (Floating Point Unit)
- 16 KByte Instruction Cache
- 16 KByte Data Cache
- 64 KByte TCM (Tightly-Coupled Memory)

The SoC-level memory system consists of the following additional components:

  - Boot ROM, including HAB (96 KB)
  - Internal multimedia / shared, fast access RAM (OCRAM, 128 KB)
  - Internal RAM for state retention or general use (OCRAM_S, 16KB)
  - Secure/non-secure RAM (32 KB)
- External memory interfaces: The i.MX 6SoloX processors support latest, high volume, cost effective handheld DRAM, NOR, and NAND Flash memory standards.
  - 16/32-bit LPDDR2-800, 16/32-bit DDR3-800 and DDR3L-800
  - 16-bit NAND-Flash, including support for Raw MLC/SLC, 2 KB, 4 KB, and 8 KB page size, BA-NAND, PBA-NAND, LBA-NAND, OneNAND and others. BCH ECC up to 62 bits. 16-bit boot is supported from OneNAND. 8-bit boot is supported from other NAND types.

  - 16/32-bit NOR Flash. All EIMv2 pins are muxed on other interfaces.

Each i.MX 6SoloX processor enables the following interfaces to external devices (some of them are muxed and not available simultaneously):

- Displays—Total three interfaces available.
  - Two parallel 24-bit display ports, each up to 1080P at 60 Hz
  - LVDS serial port—One port up to 85 MP/sec (for example, WXGA at 60 Hz)
- Camera sensors:
  - Two parallel camera ports (up to 24 bit and up to 133 MHz peak)
- Expansion cards:
  - Four MMC/SD/SDIO card ports all supporting:
    - 1-bit or 4-bit transfer mode specifications for SD and SDIO cards up to UHS-I SDR-104 mode (104 MB/s max)
    - 1-bit, 4-bit, or 8-bit transfer mode specifications for MMC cards up to 200 MHz in HS200 mode (200 MB/s max)
- USB:
  - Two high speed (HS) USB 2.0 OTG (Up to 480 Mbps), with integrated HS USB Phy
  - One HS-IC USB (High-Speed Inter-Chip USB) host
- Expansion PCI Express port (PCIe) v2.0 one lane
  - PCI Express (Gen 2.0) dual mode complex, supporting Root complex operations and Endpoint operations. Uses x1 PHY configuration.
- Miscellaneous IPs and interfaces:
  - Three SSIs and two SAIs supporting up to five I2S or AC97 ports
  - Enhanced Serial Audio Interface (ESAI)
  - Sony Philips Digital Interconnect Format (SPDIF), Rx and Tx
  - Audio MUX (AUDMUX)
  - Medium Quality Sound (MQS) module provides an opportunity for BOM cost reduction if high-quality sound is not required
  - Six UARTs, up to 5.0 Mbps each:
    - Providing RS232 interface
    - Supporting 9-bit RS485 multidrop mode
    - One of the six UARTs (UART1) supports 8-wire while others support 4-wire. This is due to the SoC IOMUX limitation, since all UART IPs are identical.
  - Five eCSPI (Enhanced CSPI)
  - Four I^2C
  - Two Gigabit Ethernet Controllers (designed to be compatible with IEEE AVB standards and IEEE Std 1588®), 10/100/1000 Mbps
  - Eight Pulse Width Modulators (PWM)
  - System JTAG Controller (SJC)

- — GPIO with interrupt capabilities
- — 8x8 Key Pad Port (KPP)
- — Two Quad SPIs
- — Two Flexible Controller Area Network (FlexCAN), 1 Mbps each
- — Three Watchdog timers (WDOG)
- — Up to two 4-channel, 12-bit Analog to Digital Converters (ADC), VM, VO, VK packages
- — One 2-channel, 12-bit Analog to Digital Converter (ADC), VN package

The i.MX 6SoloX processors integrate advanced power management unit and controllers:

- Provide PMU, including LDO supplies, for on-chip resources
- Use Temperature Sensor for monitoring the die temperature
- Support DVFS techniques for low power modes
- Use software state retention and power gating for Arm Cortex-A9 CPU core, the Arm Cortex-M4 CPU core, and the Arm NEON MPE coprocessor.
- Support various levels of system power modes
- Use flexible clock gating control scheme

The i.MX 6SoloX processors use dedicated hardware accelerators to meet the targeted multimedia performance. The use of hardware accelerators is a key factor in obtaining high performance at low power consumption, while having the CPU core relatively free for performing other tasks.

The i.MX 6SoloX processors incorporate the following hardware accelerators:

- GPU—2D (BitBlt) and 3D (OpenGL ES) Graphics Processing Unit
- PXP—PiXel Processing Pipeline for imagine resize, rotation, overlay and CSC. Off loading key pixel processing operations are required to support the LCD display applications.
- ASRC—Asynchronous Sample Rate Converter

Security functions are enabled and accelerated by the following hardware:

- Arm TrustZone including the TZ architecture (separation of interrupts, memory mapping, etc.)
- SJC—System JTAG Controller. Protecting JTAG from debug port attacks by regulating or blocking the access to the system debug features.
- CAAM—Cryptographic Acceleration and Assurance Module, containing cryptographic and hash engines, 32 KB secure RAM, and True and Pseudo Random Number Generator (NIST certified).
- SNVS—Secure Non-Volatile Storage, including Secure Real Time Clock
- CSU—Central Security Unit. Enhancement for the IC Identification Module (IIM). Will be configured during boot and by eFUSEs and will determine the security level operation mode as well as the TZ policy.
- A-HAB—Advanced High Assurance Boot—HABv4 with the new embedded enhancements: SHA-256, 2048-bit RSA key, version control mechanism, warm boot, CSU, and TZ initialization.

NOTE

The actual feature set depends on the part numbers as described in Table 1. Functions, such as display and camera interfaces, connectivity interfaces, video hardware acceleration, and 2D and 3D hardware graphics acceleration may not be enabled for specific part numbers.

2 Architectural Overview

The following subsections provide an architectural overview of the i.MX 6SoloX processor system.

2.1 Block Diagram

Figure 2 shows the functional modules in the i.MX 6SoloX processor system.

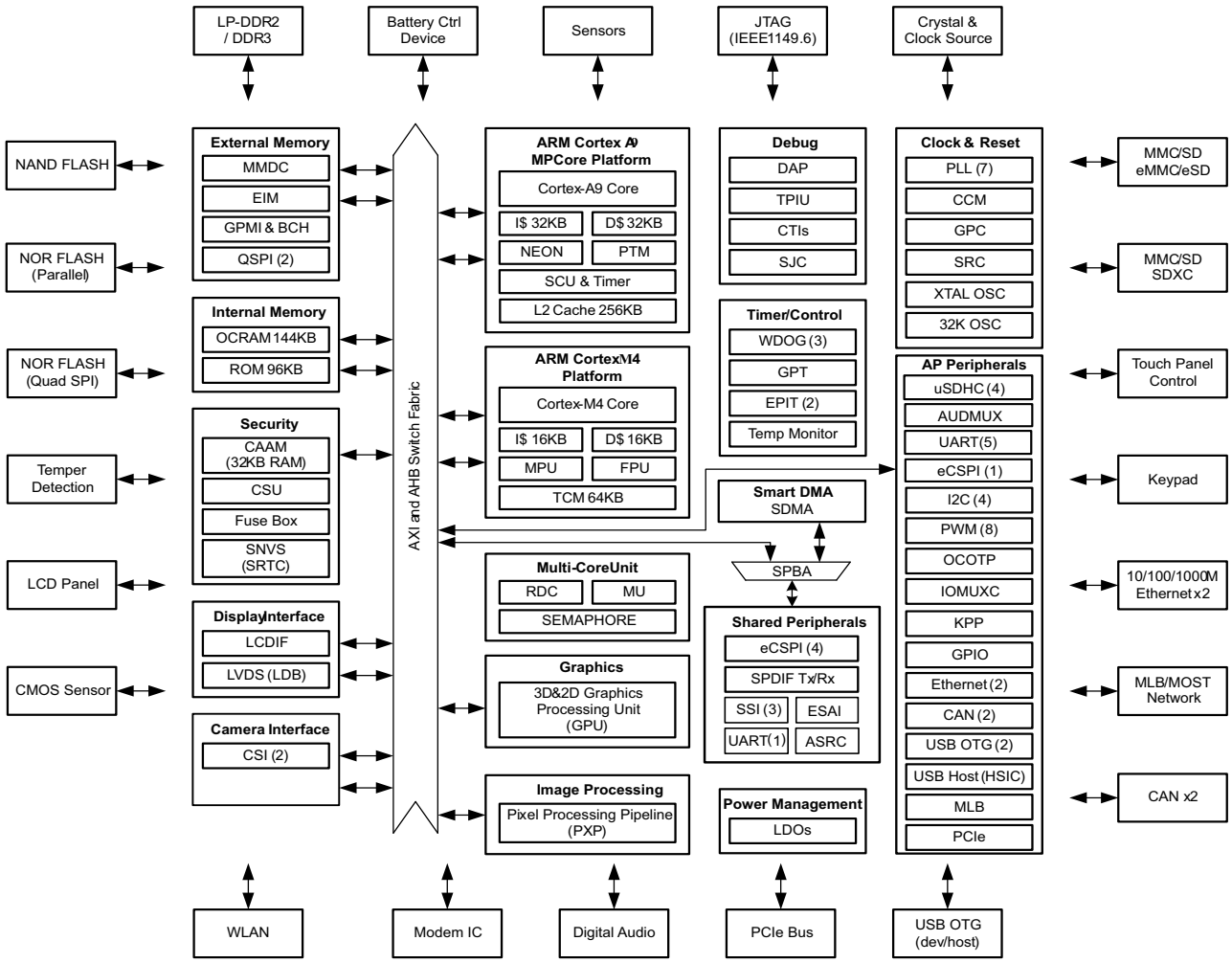

Figure 2. i.MX 6SoloX System Block Diagram

NOTE

The numbers in brackets indicate number of module instances. For example, PWM (8) indicates eight separate PWM peripherals.

3 Modules List

The i.MX 6SoloX processors contain a variety of digital and analog modules. Table 2 describes these modules in alphabetical order.

Table 2. i.MX 6SoloX Modules List

Block Mnemonic	Block Name	Subsystem	Brief Description
ADC1 ADC2	Analog to Digital Converter	—	The ADC is a 12-bit general purpose analog to digital converter.
ARM	ARM Platform	Arm	The ARM Core Platform includes 1x Cortex-A9 and 1x Cortex-M4 cores. It also includes associated sub-blocks, such as the Level 2 Cache Controller, SCU (Snoop Control Unit), GIC (General Interrupt Controller), private timers, watchdog, and CoreSight debug modules.
ASRC	Asynchronous Sample Rate Converter	Multimedia Peripherals	The Asynchronous Sample Rate Converter (ASRC) converts the sampling rate of a signal associated to an input clock into a signal associated to a different output clock. The ASRC supports concurrent sample rate conversion of up to 10 channels of about -120dB THD+N. The sample rate conversion of each channel is associated to a pair of incoming and outgoing sampling rates. The ASRC supports up to three sampling rate pairs.
AUDMUX	Digital Audio Mux	Multimedia Peripherals	The AUDMUX is a programmable interconnect for voice, audio, and synchronous data routing between host serial interfaces (for example, SSI1, SSI2, and SSI3) and peripheral serial interfaces (audio and voice codecs). The AUDMUX has seven ports with identical functionality and programming models. A desired connectivity is achieved by configuring two or more AUDMUX ports.
BCH	Binary-BCH ECC Processor	System Control Peripherals	The BCH module provides up to 62-bit ECC for NAND Flash controller (GPMI).
CAAM	Cryptographic accelerator and assurance module	Security	CAAM is a cryptographic accelerator and assurance module. CAAM implements several encryption and hashing functions, a run-time integrity checker, and a Pseudo Random Number Generator (PRNG). The pseudo random number generator is certified by Cryptographic Algorithm Validation Program (CAVP) of National Institute of Standards and Technology (NIST). Its DRBG validation number is 94 and its SHS validation number is 1455. CAAM also implements a Secure Memory mechanism. In i.MX 6SoloX processors, the security memory provided is 32 KB.
CCM GPC SRC	Clock Control Module, General Power Controller, System Reset Controller	Clocks, Resets, and Power Control	These modules are responsible for clock and reset distribution in the system, and also for the system power management.
CSI	Parallel CSI	Multimedia Peripherals	The CSI IP provides parallel CSI standard camera interface port. The CSI parallel data ports are up to 24 bits. It is designed to support 24-bit RGB888/YUV444, CCIR656 video interface, 8-bit YCbCr, YUV or RGB, and 8-bit/10-bit/26-bit Bayer data input.

Table 2. i.MX 6SoloX Modules List (continued)

Block Mnemonic	Block Name	Subsystem	Brief Description
CSU	Central Security Unit	Security	The Central Security Unit (CSU) is responsible for setting comprehensive security policy within the i.MX 6SoloX platform.
CTI	Cross Trigger Interfaces	Debug/Trace	Cross Trigger Interfaces allows cross-triggering based on inputs from masters attached to CTIs. The CTI module is internal to the Cortex-A9 Core Platform.
DAP	Debug Access Port	System Control Peripherals	The DAP provides real-time access for the debugger without halting the core to: System memory and peripheral registers All debug configuration registers The DAP also provides debugger access to JTAG scan chains. The DAP module is internal to the Cortex-A9 Core Platform.
DBGMON	Debug Monitor	Debug	DBGMON is a real-time debug monitor to record last AXI transaction before system reset.
eCSPI1 eCSPI2 eCSPI3 eCSPI4 eCSPI5	Configurable SPI	Connectivity Peripherals	Full-duplex enhanced Synchronous Serial Interface. It is configurable to support Master/Slave modes, four chip selects to support multiple peripherals.
EIM	NOR-Flash /PSRAM interface	Connectivity Peripherals	The EIM NOR-FLASH / PSRAM provides: Support 16-bit (in muxed IO mode only) PSRAM memories (sync and async operating modes), at slow frequency Support 16-bit (in muxed IO mode only) NOR-Flash memories, at slow frequency Multiple chip selects
ENET1 ENET2	Ethernet Controller	Connectivity Peripherals	The Ethernet Media Access Controller (MAC) is designed to support 10/100/1000 Mbps Ethernet/IEEE 802.3 networks. An external transceiver interface and transceiver function are required to complete the interface to the media. The module has dedicated hardware to support the IEEE 1588 standard. See the ENET chapter of the *i.MX 6SoloX Applications Processor Reference Manual* (IMX6SXRM) for details.
EPIT1 EPIT2	Enhanced Periodic Interrupt Timer	Timer Peripherals	Each EPIT is a 32-bit “set and forget” timer that starts counting after the EPIT is enabled by software. It is capable of providing precise interrupts at regular intervals with minimal processor intervention. It has a 12-bit prescaler for division of input clock frequency to get the required time setting for the interrupts to occur, and counter value can be programmed on the fly.

Table 2. i.MX 6SoloX Modules List (continued)

Block Mnemonic	Block Name	Subsystem	Brief Description
ESAI	Enhanced Serial Audio Interface	Connectivity Peripherals	The Enhanced Serial Audio Interface (ESAI) provides a full-duplex serial port for serial communication with a variety of serial devices, including industry-standard codecs, SPDIF transceivers, and other processors. The ESAI consists of independent transmitter and receiver sections, each section with its own clock generator. All serial transfers are synchronized to a clock. Additional synchronization signals are used to delineate the word frames. The normal mode of operation is used to transfer data at a periodic rate, one word per period. The network mode is also intended for periodic transfers; however, it supports up to 32 words (time slots) per period. This mode can be used to build time division multiplexed (TDM) networks. In contrast, the on-demand mode is intended for non-periodic transfers of data and to transfer data serially at high speed when the data becomes available. The ESAI has 12 pins for data and clocking connection to external devices.
FLEXCAN1 FLEXCAN2	Flexible Controller Area Network	Connectivity Peripherals	The CAN protocol was primarily, but not only, designed to be used as a vehicle serial data bus, meeting the specific requirements of this field: real-time processing, reliable operation in the Electromagnetic interference (EMI) environment of a vehicle, cost-effectiveness and required bandwidth. The FlexCAN module is a full implementation of the CAN protocol specification, Version 2.0 B, which supports both standard and extended message frames.
Fuse Box	Electrical Fuse Array	Security	Electrical Fuse Array. Enables setup of boot modes, security levels, security keys, and many other system parameters.The fuses are accessible through OCOTP_CTRL interface.
GC400T	Graphics Engine	Multimedia Peripherals	The GC400T is a graphics engine with separate 2D and 3D pipelines to provide both 2D and 3D acceleration. It supports DirectFB and GAL APIs. It supports OpenGL ES1.1/2.0 and OpenVG 1.1 APIs.
GIC	Global Interrupt Controller	Arm/Control	The Global Interrupt Controller (GIC) collects interrupt requests from all i.MX 6SoloX sources and routes them to the Arm MPCore(s). Each interrupt can be configured as a normal or a secure interrupt. Software Force Registers and software Priority Masking are also supported. This IP is part of the Arm Core complex.
GIS	General Interrupt Service module	Camera, Display, & Graphics	GIS can be used to automate the flow of data from the camera to the display.
GPIO1 GPIO2 GPIO3 GPIO4 GPIO5 GPIO6 GPIO7	General Purpose I/O Modules	System Control Peripherals	Used for general purpose input/output to external ICs. Each GPIO module supports 32 bits of I/O.

Table 2. i.MX 6SoloX Modules List (continued)

Block Mnemonic	Block Name	Subsystem	Brief Description
GPMI	General Purpose Memory Interface	Connectivity Peripherals	The GPMI module supports up to 8x NAND devices and 60-bit ECC encryption/decryption for NAND Flash Controller (GPMI2). GPMI supports separate DMA channels for each NAND device.
GPT	General Purpose Timer	Timer Peripherals	Each GPT is a 32-bit “free-running” or “set and forget” mode timer with programmable prescaler and compare and capture register. A timer counter value can be captured using an external event and can be configured to trigger a capture event on either the leading or trailing edges of an input pulse. When the timer is configured to operate in “set and forget” mode, it is capable of providing precise interrupts at regular intervals with minimal processor intervention. The counter has output compare logic to provide the status and interrupt at comparison. This timer can be configured to run either with an external clock or an internal clock.
I2C-1 I2C-2 I2C-3 I2C-4	I2C Interface	Connectivity Peripherals	I2C provide serial interface for external devices. Data rates of up to 400 kbps are supported.
IOMUXC	IOMUX Control	System Control Peripherals	This module enables flexible IO multiplexing. Each IO pad has default and several alternate functions. The alternate functions are software configurable.
KPP	Key Pad Port	Connectivity Peripherals	KPP Supports 8x8 external key pad matrix. KPP features are: • Open drain design • Glitch suppression circuit design • Multiple keys detection • Standby key press detection
LCDIF	LCD Interface	Multimedia Peripherals	The LCDIF provides display data for external LCD panels from simple text-only displays to WVGA, 16/18/24 bpp color TFT panels. The LCDIF supports all of these different interfaces by providing fully programmable functionality and sharing register space, FIFOs, and ALU resources at the same time. The LCDIF supports RGB (DOTCLK) modes as well as system mode including both VSYNC and WSYNC modes.
LVDS (LDB)	LVDS Display Bridge	Connectivity Peripherals	LVDS Display Bridge is used to connect an external LVDS display interface. LDB supports the following signals: • One clock pair • Four data pairs
MLB	MediaLB	Connectivity/ Multimedia Peripherals	The MLB interface module provides a link to a MOST® data network, using the standardized MediaLB protocol (MOST25, MOST 50).
MMDC	Multi-Mode DDR Controller	Connectivity Peripherals	DDR Controller supports 16/32-bit LPDDR2-800, DDR3-800 and DDR3L-800.

Table 2. i.MX 6SoloX Modules List (continued)

Block Mnemonic	Block Name	Subsystem	Brief Description
MU	Messaging Unit	Interprocessor Communication & Synchronization	The MU module supports interprocessor communication between the Cortex-A9 and Cortex-M4 cores.
OCOTP_CTRL	OTP Controller	Security	The On-Chip OTP controller (OCOTP_CTRL) provides an interface for reading, programming, and/or overriding identification and control information stored in on-chip fuse elements. The module supports electrically-programmable (eFUSE) polyfuses. The OCOTP_CTRL also provides a set of volatile software-accessible signals that can be used for software control of hardware elements, not requiring non-volatility. The OCOTP_CTRL provides the primary user-visible mechanism for interfacing with on-chip fuse elements. Among the uses for the fuses are unique chip identifiers, mask revision numbers, cryptographic keys, JTAG secure mode, boot characteristics, and various control signals, requiring permanent non-volatility.
OCRAM	On-Chip Memory Controller	Data Path	The On-Chip Memory controller (OCRAM) module is designed as an interface between system's AXI bus and internal (on-chip) SRAM memory module.
OCRAM 128 KB	Internal RAM	Internal Memory	Internal RAM, which is accessed through OCRAM memory controller.
OCRAM_S 16KB	Secure/nonsecure RAM	Secured Internal Memory	Secure/nonsecure internal RAM, interfaced through the CAAM. OCRAM_S can be used by software for state retention of the CPU and other hardware blocks.
OSC32KHz	OSC32KHz	Clocking	Generates 32.768 KHz clock from external crystal.
PCIe	PCI Express 2.0	Connectivity Peripherals	The PCIe IP provides PCI Express Gen 2.0 functionality.
PMU	Power-Management functions	Data Path	Integrated power management unit. Used to provide power to various SoC domains.
PWM-1 PWM-2 PWM-3 PWM-4 PWM-5 PWM-6 PWM-7 PWM-8	Pulse Width Modulation	Connectivity Peripherals	The pulse-width modulator (PWM) has a 16-bit counter and is optimized to generate sound from stored sample audio images and it can also generate tones. It uses 16-bit resolution and a 4x16 data FIFO to generate sound.
PXP	PiXel Processing Pipeline	Display Peripherals	A high-performance pixel processor capable of 1 pixel/clock performance for combined operations, such as color-space conversion, alpha blending, gamma-mapping, and rotation. The PXP is enhanced with features specifically for gray scale applications.
QSPI	Quad Serial Peripheral Interface	Connectivity Peripherals	The Quad Serial Peripheral Interface (QuadSPI) block acts as an interface to one or two external serial flash devices, each with up to four bidirectional data lines.
ROM 96KB	Boot ROM	Internal Memory	Supports secure and regular boot modes

Table 2. i.MX 6SoloX Modules List (continued)

Block Mnemonic	Block Name	Subsystem	Brief Description
RDC	Resource Domain Controller	Multicore Isolation/Sharing	RDC module supports domain-based access control to shared resources.
SEMA4	Semaphore	Multicore/Isolation /Sharing	Supports hardware-enforced semaphores.
SEMA42	Semaphore	Multicore/Isolation /Sharing	SEMA42 is similar to SEMA4 with the following key differences: SEMA42 increases the number of access domains from 2 to 15 SEMA42 does not have interrupt to indicate semaphore release RDC programming model supports the option to require hardware semaphore for peripherals shared between domains. Signaling between the SEMA42 and RDC binds peripherals to semaphore gates within SEMA42.
SAI1 SAI2	—	—	The SAI module provides a synchronous audio interface (SAI) that supports full duplex serial interfaces with frame synchronization, such as I2S, AC97, TDM, and codec/DSP interfaces.
SDMA	Smart Direct Memory Access	System Control Peripherals	The SDMA is multi-channel flexible DMA engine. It helps in maximizing system performance by off-loading the various cores in dynamic data routing. It has the following features: Powered by a 16-bit Instruction-Set micro-RISC engine Multi-channel DMA supporting up to 32 time-division multiplexed DMA channels 48 events with total flexibility to trigger any combination of channels Memory accesses including linear, FIFO, and 2D addressing Shared peripherals between ARM and SDMA Very fast Context-Switching with 2-level priority based preemptive multi-tasking DMA units with auto-flush and prefetch capability Flexible address management for DMA transfers (increment, decrement, and no address changes on source and destination address) DMA ports can handle unit-directional and bi-directional flows (copy mode) Up to 8-word buffer for configurable burst transfers for EMIv2.5 Support of byte-swapping and CRC calculations Library of Scripts and API is available

Table 2. i.MX 6SoloX Modules List (continued)

Block Mnemonic	Block Name	Subsystem	Brief Description
SJC	System JTAG Controller	System Control Peripherals	The SJC provides JTAG interface, which complies with JTAG TAP standards, to internal logic. The i.MX 6SoloX processors use JTAG port for production, testing, and system debugging. In addition, the SJC provides BSR (Boundary Scan Register) standard support, which complies with IEEE1149.1 and IEEE1149.6 standards. The JTAG port must be accessible during platform initial laboratory bring-up, for manufacturing tests and troubleshooting, as well as for software debugging by authorized entities. The i.MX 6SoloX SJC incorporates three security modes for protecting against unauthorized accesses. Modes are selected through eFUSE configuration.
SNVS	Secure Non-Volatile Storage	Security	Secure Non-Volatile Storage, including Secure Real Time Clock, Security State Machine, Master Key Control, and Violation/Tamper Detection and reporting.
SPDIF	Sony Philips Digital Interconnect Format	Multimedia Peripherals	A standard audio file transfer format, developed jointly by the Sony and Phillips corporations. Has Transmitter and Receiver functionality.
SSI1 SSI2 SSI3	I2S/SSI/AC97 Interface	Connectivity Peripherals	The SSI is a full-duplex synchronous interface, which is used on the AP to provide connectivity with off-chip audio peripherals. The SSI supports a wide variety of protocols (SSI normal, SSI network, I2S, and AC-97), bit depths (up to 24 bits per word), and clock / frame sync options. The SSI has two pairs of 8x24 FIFOs and hardware support for an external DMA controller in order to minimize its impact on system performance. The second pair of FIFOs provides hardware interleaving of a second audio stream that reduces CPU overhead in use cases where two time slots are being used simultaneously.
TEMPMON	Temperature Monitor	System Control Peripherals	The Temperature sensor IP is used for detecting die temperature. The temperature read out does not reflect case or ambient temperature. It reflects the temperature in proximity of the sensor location on the die. Temperature distribution may not be uniformly distributed, therefore the read out value may not be the reflection of the temperature value of the entire die.
TZASC	Trust-Zone Address Space Controller	Security	The TZASC (TZC-380 by Arm) provides security address region control functions required for intended application. It is used on the path to the DRAM controller.
UART1 UART2 UART3 UART4 UART5 UART6	UART Interface	Connectivity Peripherals	Each of the UARTv2 modules support the following serial data transmit/receive protocols and configurations: • 7- or 8-bit data words, 1 or 2 stop bits, programmable parity (even, odd or none) • Programmable baud rates up to 5 Mbps. • 32-byte FIFO on Tx and 32 half-word FIFO on Rx supporting auto-baud • Option to operate as 8-pins full UART, DCE, or DTE • UART1/6 support 8-pin, UART2/3/4/5 support 4-pin

Table 2. i.MX 6SoloX Modules List (continued)

Block Mnemonic	Block Name	Subsystem	Brief Description
uSDHC1 uSDHC2 uSDHC3 uSDHC4	SD/MMC and SDXC Enhanced Multi-Media Card / Secure Digital Host Controller	Connectivity Peripherals	i.MX 6SoloX specific SoC characteristics: All four MMC/SD/SDIO controller IPs are identical and are based on the uSDHC IP. They are: • Fully compliant with MMC command/response sets and Physical Layer as defined in the Multimedia Card System Specification, v4.5/4.2/4.3/4.4/4.41/ including high-capacity (size > 2 GB) cards HC MMC. • Fully compliant with SD command/response sets and Physical Layer as defined in the SD Memory Card Specifications, v3.0 including high-capacity SDHC cards up to 32 GB. • Fully compliant with SDIO command/response sets and interrupt/read-wait mode as defined in the SDIO Card Specification, Part E1, v3.0. • Conforms to the SD Host Controller Standard Specification version 3.0. All four ports support: • 1-bit or 4-bit transfer mode specifications for SD and SDIO cards up to UHS-I SDR104 mode (104 MB/s max) • 1-bit, 4-bit, or 8-bit transfer mode specifications for MMC cards up to 52 MHz in both SDR and DDR modes (104 MB/s max) • All ports can work with 1.8 V and 3.3 V cards. Each port is placed on a separate power domain.
USB	Universal Serial Bus 2.0	Connectivity Peripherals	USBOH3 contains: • Two high-speed OTG 2.0 modules with integrated HS USB PHYs • One high-speed Host module connected to HSIC USB port
WDOG1 WDOG3	Watch Dog	Timer Peripherals	The Watch Dog Timer supports two comparison points during each counting period. Each of the comparison points is configurable to evoke an interrupt to the Arm core, and a second point evokes an external event on the WDOG line.
WDOG2 (TZ)	Watch Dog (TrustZone)	Timer Peripherals	The TrustZone Watchdog (TZ WDOG) timer module protects against TrustZone starvation by providing a method of escaping normal mode and forcing a switch to the TZ mode. TZ starvation is a situation where the normal OS prevents switching to the TZ mode. Such situation is undesirable as it can compromise the system's security. Once the TZ WDOG module is activated, it must be serviced by TZ software on a periodic basis. If servicing does not take place, the timer times out. Upon a time-out, the TZ WDOG asserts a TZ mapped interrupt that forces switching to the TZ mode. If it is still not served, the TZ WDOG asserts a security violation signal to the CSU. The TZ WDOG module cannot be programmed or deactivated by a normal mode software.
XTALOSC	Crystal Oscillator Interface	Clocks, Resets, and Power Control	The XTALOSC module connects to an external crystal to provide system clocks.

3.1 Special Signal Considerations

Table 3 lists special signal considerations for the i.MX 6SoloX processors. The signal names are listed in alphabetical order.

The package contact assignments can be found in Section 6, "Package Information and Contact Assignments." Signal descriptions are provided in the *i.MX 6SoloX Applications Processor Reference Manual* (IMX6SXRM).

Table 3. Special Signal Considerations

Signal Name	Remarks
CCM_CLK1_P/ CCM_CLK1_N CCM_CLK2	Two general purpose differential high speed clock Input/outputs are provided. Any or both of them could be used: • To feed external reference clock to the PLLs and further to the modules inside SoC, for example as alternate reference clock for PCIe, Video/Audio interfaces, etc. • To output internal SoC clock to be used outside the SoC as either reference clock or as a functional clock for peripherals See the *i.MX 6SoloX Applications Processor Reference Manual* (IMX6SXRM) for details on the respective clock trees. The clock inputs/outputs are LVDS differential pairs compatible with TIA/EIA-644 standard, the frequency range supported is 0...600 MHz. Alternatively one may use single ended signal to drive CLKx_P input. In this case corresponding CLKx_N input should be tied to the constant voltage level equal 1/2 of the input signal swing. Termination should be provided in case of high frequency signals. See LVDS pad electrical specification for further details. After initialization, the CLKx inputs/outputs could be disabled (if not used). If unused any or both of the CLKx_N/P pairs may be left unconnected.
RTC_XTALI/RTC_XTALO	If the user needs to configure RTC_XTALI and RTC_XTALO as an RTC oscillator, a 32.768 kHz crystal (≤100 kΩ ESR, 10 pF load), should be connected between RTC_XTALI and RTC_XTALO. Keep in mind the capacitors implemented on either side of the crystal are about twice the crystal load capacitor. To hit the exact oscillation frequency, the board capacitors need to be reduced to account for board and chip parasitics. The integrated oscillation amplifier is self biasing, but relatively weak. Care must be taken to limit parasitic leakage from RTC_XTALI and RTC_XTALO to either power or ground (>100 MΩ). This will debias the amplifier and cause a reduction of startup margin. Typically RTC_XTALI and RTC_XTALO should bias to approximately 0.5 V. If it is desired to feed an external low frequency clock into RTC_XTALI the RTC_XTALO pin should be left unconnected or driven with a complimentary signal. The logic level of this forcing clock should not exceed VDD_SNVS_CAP level and the frequency should be <100 kHz under typical conditions. When a high accuracy real time clock is not required, the system can use an internal low frequency ring oscillator. It is recommended to connect RTC_XTALI to GND and leave RTC_XTALO unconnected.
XTALI/XTALO	A 24.0 MHz crystal should be connected between XTALI and XTALO. NXP BSP (board support package) software requires 24 MHz on XTALI/XTALO. For details on crystal selection, see the "i.MX 6SoloX Design Checklist" chapter of the *Hardware Development Guide for i.MX 6SoloX Applications Processors* (IMX6SXHDG), as well as the engineering bulletin *i.MX 6 Series Crystal Drive (24 MHz)* (EB830). The crystal can be eliminated if an external 24 MHz oscillator is available in the system. In this case, XTALI must be directly driven by the external oscillator and XTALO is left unconnected. If this clock is used as a reference for USB and PCIe, then there are strict frequency tolerance and jitter requirements. See OSC24M chapter and relevant interface specifications chapters for details.

Table 3. Special Signal Considerations (continued)

Signal Name	Remarks
DRAM_VREF	When using DDR_VREF with DDR I/O, the nominal reference voltage must be half of the NVCC_DRAM supply. The user must tie DDR_VREF to a precision external resistor divider. Use a 1 kΩ 0.5% resistor to GND and a 1 kΩ 0.5% resistor to NVCC_DRAM. Shunt the resistor from DRAM_VREF to ground with a closely mounted 0.1 µF capacitor. To reduce supply current, a pair of 1.5 kΩ 0.1% resistors can be used. Using resistors with recommended tolerances ensures the ± 2% DDR_VREF tolerance (per the DDR3 specification) is maintained when four DDR3 ICs plus the i.MX 6SoloX are drawing current on the resistor divider.
ZQPAD	DRAM calibration resistor 240 Ω 1% used as reference during DRAM output buffer driver calibration should be connected between this pad and GND.
NVCC_LVDS	On the 19 x 19 package, this ball can be shorted to VDD_HIGH_CAP on the circuit board. On the 17 x 17 and 14 x 14 packages, NVCC_LVDS is internally connected to VDD_HIGH_CAP.
GPANAIO	Analog output for NXP use only. This output must always be left unconnected.
JTAG_*nnnn*	The JTAG interface is summarized in Table 4. Use of external resistors is unnecessary. However, if external resistors are used, the user must ensure that the on-chip pull-up/down configuration is followed. For example, do not use an external pull down on an input that has on-chip pull-up.
	JTAG_TDO is configured with a keeper circuit such that the floating condition is eliminated if an external pull resistor is not present. An external pull resistor on JTAG_TDO is detrimental and should be avoided.
	JTAG_MOD is referenced as SJC_MOD in the *i.MX 6SoloX Applications Processor Reference Manual* (IMX6SXRM). Both names refer to the same signal. JTAG_MOD must be externally connected to GND for normal operation. Termination to GND through an external pull-down resistor (such as 1 kΩ) is allowed. JTAG_MOD set to high configures the JTAG interface to mode compliant with IEEE1149.1 standard. JTAG_MOD set to low configures the JTAG interface for common software debug adding all the system TAPs to the chain.
NC	These signals are No Connect (NC) and should be left unconnected by the user.
POR_B	This cold reset negative logic input resets all modules and logic in the IC.
ONOFF	ONOFF can be configured in debounce, off to on time, and max timeout configurations. The debounce and off to on time configurations supports 0, 50, 100 and 500 msecs. Debounce is used to generate the power off interrupt. While in the ON state, if ONOFF button is pressed longer than the debounce time, the power off interrupt is generated. Off to on time supports the time it takes to request power on after a configured button press time has been reached. While in the OFF state, if ONOFF button is pressed longer than the off to on time, the state will transition from OFF to ON. Max timeout configuration supports 5, 10, 15 secs and disable. Max timeout configuration supports the time it takes to request power down after ONOFF button has been pressed for the defined time.
TEST_MODE	TEST_MODE is for NXP factory use. The user must tie this pin directly to GND.
PCIE_REXT	The impedance calibration process requires connection of reference resistor 200 Ω 1% precision resistor on PCIE_REXT pad to ground.

Table 4. JTAG Controller Interface Summary

JTAG	I/O Type	On-chip Termination
JTAG_TCK	Input	47 kΩ pull-up
JTAG_TMS	Input	47 kΩ pull-up
JTAG_TDI	Input	47 kΩ pull-up

Table 4. JTAG Controller Interface Summary (continued)

JTAG	I/O Type	On-chip Termination
JTAG_TDO	3-state output	Keeper
JTAG_TRSTB	Input	47 kΩ pull-up
JTAG_MOD	Input	100 kΩ pull-up

3.2 Recommended Connections for Unused Analog Interfaces

The recommended connections for unused analog interfaces can be found in the section, "Unused analog interfaces," of the Hardware Development Guide for i.MX 6SoloX Applications Processors (IMX6SXHDG).

4 Electrical Characteristics

This section provides the device and module-level electrical characteristics for the i.MX 6SoloX processors.

4.1 Chip-Level Conditions

This section provides the device-level electrical characteristics for the IC. See Table 5 for a quick reference to the individual tables and sections.

Table 5. i.MX 6SoloX Chip-Level Conditions

For these characteristics, …	Topic appears …
Absolute Maximum Ratings	on page 22
Thermal Resistance	on page 24
Operating Ranges	on page 27
External Clock Sources	on page 30
Maximum Supply Currents	on page 31
Low Power Mode Supply Currents	on page 32
USB PHY Current Consumption	on page 33
PCIe 2.0 Power Consumption	on page 34

4.1.1 Absolute Maximum Ratings

CAUTION

Stresses beyond those listed under Table 6 may cause permanent damage to the device. These are stress ratings only. Functional operation of the device at these or any other conditions beyond those indicated under "recommended operating conditions" is not implied. Exposure to absolute-maximum-rated conditions for extended periods may affect device reliability.

Table 6 shows the absolute maximum operating ratings.

Table 6. Absolute Maximum Ratings

Parameter Description	Symbol[1]	Min	Max	Unit
Core Supplies Input Voltage (LDO Enabled)	VDDSOC_IN VDDARM_IN	-0.3	1.6	V
Core Supplies Input Voltage (LDO Bypass)	VDDSOC_IN VDDARM_IN	-0.3	1.4	V
VDD_HIGH_IN Supply voltage (LDO Enabled)	VDD_HIGH_IN	-0.3	3.7	V
VDD_HIGH_IN Supply voltage (LDO Bypass)	VDD_HIGH_IN	-0.3	2.85	V
Core Supplies Output Voltage (LDO Enabled)	VDD_ARM_CAP VDD_SOC_CAP	-0.3	1.4	V
VDD_HIGH_CAP LDO Output Supply voltage	VDD_HIGH_CAP	-0.3	2.6	V
Supply Input Voltage to Secure Non-Volatile Storage and Real Time Clock	VDD_SNVS_IN	-0.3	3.6	V
USB VBUS Supply	USB_OTG_VBUS	—	5.6	V
Input voltage on USB signals (non-VBUS)	USB_OTG_DP, USB_OTG_DN, USB_H1_DP, USB_H1_DN, USB_OTG_CHD_B	-0.3	3.63	V
Supply for the USB HSIC interface	NVCC_USB_H	—	2.85	V
IO Supply for DDR Interface	NVCC_DRAM	-0.4	1.975[2]	V
Supply for DDR pre-drivers	NVCC_DRAM_2P5	-0.3	2.85	V
IO Supply for RGMII Interface	NVCC_RGMII	-0.5	3.7	V

Table 6. Absolute Maximum Ratings (continued)

Parameter Description	Symbol[1]	Min	Max	Unit
IO Supply for GPIO Type Pins	NVCC_CSI NVCC_ENET NVCC_HIGH NVCC_KEY NVCC_GPIO NVCC_LCD NVCC_LOW NVCC_NAND NVCC_QSPI NVCC_SD NVCC_JTAG	-0.5	3.7	V
IO Supply for LVDS	NVCC_LVDS	-0.3	2.85	V
IO Supply for MLB	Supplies denoted as GPIO supplies	-0.3	2.9	V
VP Supplies for PCIe	PCIE_VP	-0.3	1.4	V
VPH Supplies for PCIe	PCIE_VPH	-0.3	2.85	V
Supply for PCIe PHY	PCIE_VPTX	-0.3	1.4	V
Supply for ADC 3P3V	VDDA_ADC_3P3	—	3.7	V
3.3V Supply for analog circuitry	VDD_AFE_3P3	—	3.7	V
Input/Output Voltage Range (non-DDR pins)	V_{in}/V_{out}	-0.5	OVDD+0.3[3]	V
Input/Output Voltage Range (DDR pins)	V_{in}/V_{out}	-0.5	OVDD[3]+0.4[2]	V
ESD damage Immunity: Human Body Model (HBM)	V_{esd}_HBM	—	2000	V
ESD damage Immunity: Charge Device Model (CDM)	V_{esd}_CDM	—	500	V
Storage Temperature Range	TSTORAGE	-40	150	°C

1 Not all of the supplies shown exist on all packages. See the package ball maps for details on which supplies are used on each package.

2 The absolute maximum voltage includes an allowance for 400 mV of overshoot on the IO pins. Per JEDEC standards, the allowed signal overshoot must be de-rated if NVCC_DRAM exceeds 1.575V.

3 OVDD is the I/O supply voltage.

4.1.2 Thermal Resistance

NOTE

Per JEDEC JESD51-2, the intent of thermal resistance measurements is solely for a thermal performance comparison of one package to another in a standardized environment. This methodology is not meant to and will not predict the performance of a package in an application-specific environment.

4.1.2.1 19x19 mm (VM) Package Thermal Resistance

Table 7 displays the 19x19 mm (VM) package thermal resistance data.

Table 7. 19x19 mm (VM) Package Thermal Resistance Data

Rating	Test Conditions	Symbol	Value	Unit	Notes
Junction to Ambient Natural Convection	Single-layer board (1s)	$R_{\theta JA}$	40.6	°C/W	1,2
Junction to Ambient Natural Convection	Four-layer board (2s2p)	$R_{\theta JA}$	28.0	°C/W	1,2,3
Junction to Ambient (@ 200 ft/min)	Single layer board (1s)	$R_{\theta JMA}$	32.1	°C/W	1,3
Junction to Ambient (@ 200 ft/min)	Four layer board (2s2p)	$R_{\theta JMA}$	23.0	°C/W	1,3
Junction to Board	—	$R_{\theta JB}$	17.9	°C/W	4
Junction to Case	—	$R_{\theta JC}$	7.8	°C/W	5
Junction to Package Top	Natural Convection	Ψ_{JT}	2	°C/W	6
Junction to Package Bottom	Natural Convection	Ψ_{JB}	7.5	°C/W	7

1 Junction temperature is a function of die size, on-chip power dissipation, package thermal resistance, mounting site (board) temperature, ambient temperature, air flow, power dissipation of other components on the board, and board thermal resistance.

2 Per SEMI G38-87 and JEDEC JESD51-2 with the single layer board horizontal.

3 Per JEDEC JESD51-6 with the board horizontal.

4 Thermal resistance between the die and the printed circuit board per JEDEC JESD51-8. Board temperature is measured on the top surface of the board near the package.

5 Thermal resistance between the die and the case top surface as measured by the cold plate method (MIL SPEC-883 Method 1012.1).

6 Thermal characterization parameter indicating the temperature difference between package top and the junction temperature per JEDEC JESD51-2. When Greek letters are not available, the thermal characterization parameter is written as Psi-JT.

7 Thermal characterization parameter indicating the temperature difference between package bottom center and the junction temperature per JEDEC JESD51-12. When Greek letters are not available, the thermal characterization parameter is written as Psi-JB.

4.1.2.2 17x17 mm NP (VO) and 17x17 mm WP (VN) Package Thermal Resistance

Table 8 displays the 17x17 mm NP (VO) and 17x17 mm WP (VN) package thermal resistance data.

Table 8. 17x17 mm NP (VO) and 17x17 mm WP (VN) Thermal Resistance Data

Rating	Test Conditions	Symbol	Value	Unit	Notes
Junction to Ambient Natural Convection	Single-layer board (1s)	$R_{\theta JA}$	44.4	°C/W	1,2
Junction to Ambient Natural Convection	Four-layer board (2s2p)	$R_{\theta JA}$	27.4	°C/W	1,2,3
Junction to Ambient (@ 200 ft/min)	Single layer board (1s)	$R_{\theta JMA}$	35.2	°C/W	1,3
Junction to Ambient (@ 200 ft/min)	Four layer board (2s2p)	$R_{\theta JMA}$	22.5	°C/W	1,3
Junction to Board	—	$R_{\theta JB}$	13.2	°C/W	4
Junction to Case	—	$R_{\theta JC}$	8.4	°C/W	5
Junction to Package Top	Natural Convection	Ψ_{JT}	2	°C/W	6
Junction to Package Bottom	Natural Convection	Ψ_{JB}	8.6	°C/W	7

1 Junction temperature is a function of die size, on-chip power dissipation, package thermal resistance, mounting site (board) temperature, ambient temperature, air flow, power dissipation of other components on the board, and board thermal resistance.

2 Per SEMI G38-87 and JEDEC JESD51-2 with the single layer board horizontal.

3 Per JEDEC JESD51-6 with the board horizontal.

4 Thermal resistance between the die and the printed circuit board per JEDEC JESD51-8. Board temperature is measured on the top surface of the board near the package.

5 Thermal resistance between the die and the case top surface as measured by the cold plate method (MIL SPEC-883 Method 1012.1).

6 Thermal characterization parameter indicating the temperature difference between package top and the junction temperature per JEDEC JESD51-2. When Greek letters are not available, the thermal characterization parameter is written as Psi-JT.

7 Thermal characterization parameter indicating the temperature difference between package bottom center and the junction temperature per JEDEC JESD51-12. When Greek letters are not available, the thermal characterization parameter is written as Psi-JB.

4.1.2.3 14x14 mm (VK) Package Thermal Resistance

Table 9 displays the 14x14 mm (VK) package thermal resistance data.

Table 9. 14x14 mm (VK) Package Thermal Resistance Data

Rating	Test Conditions	Symbol	Value	Unit	Notes
Junction to Ambient Natural Convection	Single-layer board (1s)	$R_{\theta JA}$	41.2	°C/W	1,2
Junction to Ambient Natural Convection	Four-layer board (2s2p)	$R_{\theta JA}$	29.6	°C/W	1,2,3
Junction to Ambient (@ 200 ft/min)	Single layer board (1s)	$R_{\theta JMA}$	40.9	°C/W	1,3
Junction to Ambient (@ 200 ft/min)	Four layer board (2s2p)	$R_{\theta JMA}$	24.7	°C/W	1,3
Junction to Board	—	$R_{\theta JB}$	13.3	°C/W	4
Junction to Case	—	$R_{\theta JC}$	9.0	°C/W	5
Junction to Package Top	Natural Convection	Ψ_{JT}	2	°C/W	6
Junction to Package Bottom	Natural Convection	Ψ_{JB}	9.9	°C/W	7

1 Junction temperature is a function of die size, on-chip power dissipation, package thermal resistance, mounting site (board) temperature, ambient temperature, air flow, power dissipation of other components on the board, and board thermal resistance.

2 Per SEMI G38-87 and JEDEC JESD51-2 with the single layer board horizontal.

3 Per JEDEC JESD51-6 with the board horizontal.

4 Thermal resistance between the die and the printed circuit board per JEDEC JESD51-8. Board temperature is measured on the top surface of the board near the package.

5 Thermal resistance between the die and the case top surface as measured by the cold plate method (MIL SPEC-883 Method 1012.1).

6 Thermal characterization parameter indicating the temperature difference between package top and the junction temperature per JEDEC JESD51-2. When Greek letters are not available, the thermal characterization parameter is written as Psi-JT.

7 Thermal characterization parameter indicating the temperature difference between package bottom center and the junction temperature per JEDEC JESD51-12. When Greek letters are not available, the thermal characterization parameter is written as Psi-JB.

4.1.3 Operating Ranges

Table 10 provides the operating ranges of the i.MX 6SoloX processors. For details on the chip's power structure, see the "Power Management Unit (PMU)" chapter of the *i.MX 6SoloX Applications Processor Reference Manual* (IMX6SXRM).

NOTE

Applying the maximum power supply voltage results in maximum power consumption and heat generation. NXP recommends a voltage set point = (Vmin + the supply tolerance). This results in an optimized power/speed ratio.

Table 10. Operating Ranges

Parameter Description	Symbol	Operating Conditions	Min	Typ	Max[1]	Unit	Notes
Power Supply Operating Ranges							
Run Mode: LDO enabled	VDD_ARM_IN	A9 core at 996 MHz	1.35	—	1.5	V	VDDARM_IN must be 125mV higher than the LDO Output Set Point (VDD_ARM_CAP) for correct supply voltage regulation.
		A9 core at 792 MHz	1.275	—	1.5	V	
		A9 core at 396 MHz	1.175	—	1.5	V	
		A9 core at 198 MHz	1.075	—	1.5	V	
	VDD_ARM_CAP	A9 core at 996 MHz	1.225	—	1.3	V	Output voltage must be set to the following rules: VDD_ARM_CAP – VDD_SOC_CAP < +50 mV VDD_SOC_CAP – VDD_ARM_CAP < +200 mV
		A9 core at 792 MHz	1.15	—	1.3	V	
		A9 core at 396 MHz	1.05	—	1.3	V	
		A9 core at 198 MHz	0.95	—	1.3	V	
	VDD_SOC_IN	—	1.275	—	1.5	V	VDDSOC_IN must be 125mV higher than the LDO Output Set Point (VDD_SOC_CAP) for correct supply voltage regulation.
	VDD_SOC_CAP	—	1.15	—	1.3	V	Output voltage must be set to the following rules: VDD_ARM_CAP – VDD_SOC_CAP < +50 mV VDD_SOC_CAP – VDD_ARM_CAP < +200 mV

Table 10. Operating Ranges (continued)

Parameter Description	Symbol	Operating Conditions	Min	Typ	Max[1]	Unit	Notes
Run Mode: LDO bypassed	VDD_ARM_IN	A9 core at 996 MHz	1.25	—	1.3	V	
		A9 core at 792 MHz	1.15	—	1.3	V	
		A9 core at 396 MHz	1.05	—	1.3	V	
		A9 core at 198 MHz	0.95	—	1.3	V	
	VDD_SOC_IN	—	1.15	—	1.3	V	
Standby/DSM Mode	VDD_ARM_IN	—	0.9	—	1.3	V	See Table 14 and Table 15.
	VDD_SOC_IN	—	1.05	—	1.3	V	
VDD_HIGH internal regulator	VDD_HIGH_IN	—	2.8	—	3.6	V	Must match the range of voltages that the rechargeable backup battery supports.
Backup battery supply range	VDD_SNVS_IN	—	2.4	—	3.6	V	Could be combined with VDD_HIGH_IN if the system does not require real time and other data on off state.
USB supply voltages	USB_OTG1_VBUS/ USB_OTG2_VBUS	—	4.4	—	5.5	V	—
DDR I/O supply	NVCC_DRAM	LPDDR2	1.14	1.2	1.3	V	—
		DDR3L	1.283	1.35	1.45	V	
		DDR3	1.425	1.5	1.575	V	
HSIC I/O supply	NVCC_USB_H	1.2 V operation	1.15	1.2	1.3	V	IOMUXC_SW_PAD_CTL_PAD_USB_H_DATA[DDR_SEL] = ‘10’ IOMUXC_SW_PAD_CTL_PAD_USB_H_STROBE[DDR_SEL] = ‘10’ NVCC_USB_H should be grounded through a 10k resistor if the HSIC pins are not used.
		1.5 V operation	1.425	1.5	1.575	V	IOMUXC_SW_PAD_CTL_PAD_USB_H_DATA[DDR_SEL] = ‘11’ IOMUXC_SW_PAD_CTL_PAD_USB_H_STROBE[DDR_SEL] = ‘11’ NVCC_USB_H should be grounded through a 10k resistor if the HSIC pins are not used.
		1.8 V operation	1.62	1.8	1.98	V	
		2.5 V operation	2.25	2.5	2.75	V	

Table 10. Operating Ranges (continued)

Parameter Description	Symbol	Operating Conditions	Min	Typ	Max[1]	Unit	Notes
RGMII I/O supply	NVCC_RGMII1 NVCC_RGMII2	1.5 V mode	1.43	1.5	1.58	V	—
		1.8 V mode	1.7	1.8	1.9	V	
		2.5 V mode	2.25	2.5	2.625	V	
		3.3 V mode	3.0	3.15/3.3	3.6	V	
GPIO supplies	NVCC_CSI NVCC_ENET NVCC_GPIO NVCC_HIGH NVCC_KEY NVCC_LCD1 NVCC_LOW NVCC_NAND NVCC_QSPI NVCC_SD1 NVCC_SD2 NVCC_SD4 NVCC_JTAG	—	1.65	1.8 2.8 3.15	3.6	V	All digital I/O supplies (NVCC_xxxx) must be powered (unless otherwise specified in this data sheet) under normal conditions whether the associated I/O pins are in use or not and the associated IO pins need to have a pull-up or pull-down resistor applied to limit any floating gate current.
	NVCC_LVDS NVCC_DRAM_2P5	—	2.25	2.5	2.75	V	
PCIe supplies	PCIE_VP	—	1.023	1.1	1.21	V	—
	PCIE_VPH	—	2.325	2.5	2.75	V	
	PCIE_VPTX	—	1.023	1.1	1.21	V	
A/D converter supply	VDDA_ADC_3P3	—	3	3.15	3.6	V	VDDA_ADC_3P3 must be powered even if the ADC is not used. VDDA_ADC_3P3 should not be powered when the other SoC supplies (except VDD_SNVS_IN) are off.
Temperature Operating Ranges							
Junction temperature	T_J	Standard Consumer	0	—	95	°C	See the application note, *i.MX 6SoloX Product Lifetime Usage Estimates* (AN5062) for information on product lifetime (power-on years) for this processor.
		Extended Consumer	–20	—	105	°C	

[1] Applying the maximum voltage results in maximum power consumption and heat generation. NXP recommends a voltage set point = (V_{min} + the supply tolerance). This results in an optimized power/speed ratio.

Table 11 shows on-chip LDO regulators that can supply on-chip loads.

Table 11. On-Chip LDOs[1] and their On-Chip Loads

Voltage Source	Load	Comment
VDD_HIGH_CAP	NVCC_LVDS	Board-level connection to VDD_HIGH_CAP
	NVCC_DRAM_2P5	
	PCIE_VPH	

1 On-chip LDOs are designed to supply i.MX6 loads and must not be used to supply external loads.

4.1.4 External Clock Sources

Each i.MX 6SoloX processor has two external input system clocks: a low frequency (RTC_XTALI) and a high frequency (XTALI).

The RTC_XTALI is used for low-frequency functions. It supplies the clock for wake-up circuit, power-down real time clock operation, and slow system and watch-dog counters. The clock input can be connected to either external oscillator or a crystal using an internal oscillator amplifier. Additionally, there is an internal ring oscillator, which can be used instead of the RTC_XTALI if accuracy is not important.

The system clock input XTALI is used to generate the main system clock. It supplies the PLLs and other peripherals. The system clock input can be connected to either external oscillator or a crystal using an internal oscillator amplifier.

CAUTION

The internal RTC oscillator does not provide an accurate frequency and is affected by process, voltage, and temperature variations. NXP strongly recommends using an external crystal as the RTC_XTALI reference. If the internal oscillator is used, careful consideration must be given to the timing implications on all of the SoC modules dependent on this clock.

Table 12 shows the interface frequency requirements.

Table 12. External Input Clock Frequency

Parameter Description	Symbol	Min	Typ	Max	Unit
RTC_XTALI Oscillator[1,2]	f_{ckil}	—	32.768[3]/32.0	—	kHz
XTALI Oscillator[2,4]	f_{xtal}	—	24	—	MHz

1 External oscillator or a crystal with internal oscillator amplifier.

2 The required frequency stability of this clock source is application dependent. For recommendations, see the Hardware Development Guide for i.MX 6SoloX Applications Processors (IMX6XHDG).

3 Recommended nominal frequency 32.768 kHz.

4 External oscillator or a fundamental frequency crystal with internal oscillator amplifier.

The typical values shown in Table 12 are required for use with NXP BSPs to ensure precise time keeping and USB operation. For RTC_XTALI operation, two clock sources are available.

- On-chip 40 kHz ring oscillator—this clock source has the following characteristics:

— Approximately 25 µA more Idd than crystal oscillator
— Approximately ±50% tolerance
— No external component required
— Starts up quicker than 32 kHz crystal oscillator

- External crystal oscillator with on-chip support circuit:
  — At power up, ring oscillator is utilized. After crystal oscillator is stable, the clock circuit switches over to the crystal oscillator automatically.
  — Higher accuracy than ring oscillator
  — If no external crystal is present, then the ring oscillator is utilized

The decision of choosing a clock source should be taken based on real-time clock use and precision timeout.

4.1.5 Maximum Supply Currents

The data shown in Table 13 represent a use case designed specifically to show the maximum current consumption possible. All cores are running at the defined maximum frequency and are limited to L1 cache accesses only to ensure no pipeline stalls. Although a valid condition, it would have a very limited practical use case, if at all, and be limited to an extremely low duty cycle unless the intention was to specifically show the worst case power consumption.

Table 13. Maximum Supply Currents

Power Line	Conditions	Max Current	Unit
VDD_ARM_IN	996 MHz Arm clock based on Power Virus operation	1100	mA
VDD_SOC_IN	996 MHz Arm clock	1260	mA
VDD_HIGH_IN	—	125[1]	mA
VDD_SNVS_IN	—	400[2]	µA
USB_OTG1_VBUS/USB_OTG2_VBUS (LDO_USB)	—	50[3]	mA
VDDA_ADC_3P3	—	1.5	mA
Primary Interface (IO) Supplies			
NVCC_DRAM	—	(See Note[4])	—
NVCC_DRAM_2P5	—	Use Maximum IO equation [5]	—
NVCC_ENET	N=10	Use Maximum IO equation [5]	—
NVCC_LCD1	N=29	Use Maximum IO equation [5]	—
NVCC_GPIO	N=14	Use Maximum IO equation [5]	—
NVCC_CSI	N=12	Use Maximum IO equation [5]	—
NVCC_QSPI	N=16	Use Maximum IO equation [5]	—
NVCC_JTAG	N=6	Use Maximum IO equation [5]	—

Table 13. Maximum Supply Currents (continued)

Power Line	Conditions	Max Current	Unit
NVCC_RGMII1	N=12	Use Maximum IO equation [5]	—
NVCC_RGMII2	N=12	Use Maximum IO equation [5]	—
NVCC_SD1	N=6	Use Maximum IO equation [5]	—
NVCC_SD2	N=6	Use Maximum IO equation [5]	—
NVCC_SD4	N=11	Use Maximum IO equation [5]	—
NVCC_NAND	N=16	Use Maximum IO equation [5]	—
NVCC_KEY	N=10	Use Maximum IO equation [5]	—
NVCC_LOW	N=10	Use Maximum IO equation [5]	—
NVCC_HIGH	N=10	Use Maximum IO equation [5]	—
NVCC_USB_H	N=2	Use Maximum IO equation [5]	—

[1] The actual maximum current drawn from VDD_HIGH_IN will be as shown plus any additional current drawn from the VDD_HIGH_CAP outputs, depending upon actual application configuration (for example, NVCC_LVDS).

[2] Under normal operating conditions, the maximum current on VDD_SNVS_IN is shown Table 13. The maximum VDD_SNVS_IN current may be higher depending on specific operating configurations, such as BOOT_MODE[1:0] not equal to 00, or use of the Tamper feature. During initial power on, VDD_SNVS_IN can draw up to 1 mA if the supply is capable of sourcing that current. If less than 1 mA is available, the VDD_SNVS_CAP charge time will increase.

[3] This is the maximum current per active USB physical interface.

[4] The DRAM power consumption is dependent on several factors such as external signal termination. DRAM power calculators are typically available from memory vendors which take into account factors such as signal termination.
See the *i.MX 6SoloX Power Consumption Measurement Application Note* (AN5050) for examples of DRAM power consumption during specific use case scenarios.

[5] General equation for estimated, maximum power consumption of an IO power supply:
Imax = N x C x V x (0.5 x F)
Where:
N—Number of IO pins supplied by the power line
C—Equivalent external capacitive load
V—IO voltage
(0.5 xF)—Data change rate. Up to 0.5 of the clock rate (F)
In this equation, Imax is in Amps, C in Farads, V in Volts, and F in Hertz.

4.1.6 Low Power Mode Supply Currents

Table 14 and Table 15 show the current core consumption (not including I/O) of i.MX 6SoloX processors in selected low power modes.

Table 14. Low Power Mode Current and Power Consumption (LDO Bypass Mode)

Mode	Test Conditions	Supply	Typical[1]	Units
System Idle	See the Power Modes table in the Clock and Power Management chapter of the *i.MX 6SoloX Applications Processor Reference Manual* (IMX6SXRM) for the definition of this mode.	VDDARM_IN (1.15 V)	7.469	mA
		VDDSOC_IN (1.15 V)	8.436	
		VDDHIGH_IN (3.3 V)	3.376	
		Total	29.430	mW

Table 14. Low Power Mode Current and Power Consumption (LDO Bypass Mode) (continued)

Mode	Test Conditions	Supply	Typical[1]	Units
Low Power Idle	See the Power Modes table in the Clock and Power Management chapter of the *i.MX 6SoloX Applications Processor Reference Manual* (IMX6SXRM) for the definition of this mode. SOC LDO must be bypassed. Bandgap is disabled.	VDDARM_IN (1.15 V)	0.001	mA
		VDDSOC_IN (1.15 V)	2.337	
		VDDHIGH_IN (3.3 V)	0.404	
		Total	4.022	mW
Suspend/ Deep Sleep mode (DSM)	See the Power Modes table in the Clock and Power Management chapter of the *i.MX 6SoloX Applications Processor Reference Manual* (IMX6SXRM) for the definition of this mode.	VDD_ARM_IN (0.9 V)	0.001	mA
		VDD_SOC_IN (1.05 V)	1.005	
		VDDHIGH_IN (3.3 V)	0.034	
		Total	2.067	mW
SNVS	SNVS power domain powered. All other power domains are off.	VDD_SNVS_IN (2.8 V)	41	µA
		Total	0.115	mW

[1] Typical process material in fab.

Table 15. Low Power Mode Current and Power Consumption (LDO Enabled Mode)

Mode	Test Conditions	Supply	Typical[1]	Units
Low Power Idle	See the Power Modes table in the Clock and Power Management chapter of the *i.MX 6SoloX Applications Processor Reference Manual* (IMX6SXRM) for the definition of this mode. SOC LDO is enabled. Bandgap is enabled.	VDDARM_IN (1.3V)	0.008	mA
		VDDSOC_IN (1.3V)	2.343	
		VDDHIGH_IN (3.3V)	3.376	
		Total	14.196	mW
Suspend/ Deep Sleep mode (DSM	See the Power Modes table in the Clock and Power Management chapter of the *i.MX 6SoloX Applications Processor Reference Manual* (IMX6SXRM) for the definition of this mode.	VDDARM_IN (1.3V)	0.033	mA
		VDDSOC_IN (1.3V)	1.3	
		VDDHIGH_IN (3.3V)	0.034	
		Total	2.231	mW

[1] Typical process material in fab.

4.1.7 USB PHY Current Consumption

4.1.7.1 Power Down Mode

In power down mode, everything is powered down, including the USB_VBUS valid detectors in typical condition. Table 16 shows the USB interface current consumption in power down mode.

Table 16. USB PHY Current Consumption in Power Down Mode

	VDD_USB_CAP (3.0 V)	VDD_HIGH_CAP (2.5 V)	NVCC_PLL (1.1 V)
Current	5.1 µA	1.7 µA	<0.5 µA

NOTE

The currents on the VDD_HIGH_CAP and VDD_USB_CAP were identified to be the voltage divider circuits in the USB-specific level shifters.

4.1.8 PCIe 2.0 Power Consumption

Table 17 provides PCIe PHY currents under certain transmit operating modes.

Table 17. PCIe PHY Current Drain

Mode	Test Conditions	Supply	Max Current	Unit
P0: Normal Operation	5G Operations	PCIE_VPH (2.5 V)	21	mA
	2.5G Operations	PCIE_VPH (2.5 V)	20	
P0s: Low Recovery Time Latency, Power Saving State	5G Operations	PCIE_VPH (2.5 V)	18	mA
	2.5G Operations	PCIE_VPH (2.5 V)	18	
P1: Longer Recovery Time Latency, Lower Power State	—	PCIE_VPH (2.5 V)	12	mA
Power Down	—	PCIE_VPH (2.5 V)	0.36	mA

4.2 Power Supplies Requirements and Restrictions

The system design must comply with power-up sequence, power-down sequence, and steady state guidelines as described in this section to guarantee the reliable operation of the device. Any deviation from these sequences may result in the following situations:

- Excessive current during power-up phase
- Prevention of the device from booting
- Irreversible damage to the processor (worst-case scenario)

4.2.1 Power-Up Sequence

The restrictions that follow must be observed:

- VDD_SNVS_IN supply must be turned on before any other power supply or be connected (shorted) with VDD_HIGH_IN supply.
- If a coin cell is used to power VDD_SNVS_IN, then ensure that it is connected before any other supply is switched on.
- When the SRC_POR_B signal is used to control the processor POR, then SRC_POR_B must be immediately asserted at power-up and remain asserted until the VDD_ARM_CAP and VDD_SOC_CAP supplies are stable. VDD_ARM_IN and VDD_SOC_IN may be applied in either order with no restrictions.

NOTE

Ensure there is no back voltage (leakage) from any supply on the board towards the 3.3 V supply (for example, from the external components that use both the 1.8 V and 3.3 V supplies).

NOTE

USB_OTG1_VBUS and USB_OTG2_VBUS are not part of the power supply sequence and may be powered at any time.

4.2.2 Power-Down Sequence

There are no special restrictions for the i.MX 6SoloX IC.

4.2.3 Power Supplies Usage

All I/O pins must not be externally driven while the I/O power supply for the pin (NVCC_xxx) is OFF. This can cause internal latch-up and malfunctions due to reverse current flows. For information about I/O power supply of each pin, see "Power Rail" columns in pin list tables of Section 6, "Package Information and Contact Assignments."

4.3 Integrated LDO Voltage Regulator Parameters

Various internal supplies can be powered ON from internal LDO voltage regulators. All the supply pins named *_CAP must be connected to external capacitors. The onboard LDOs are intended for internal use only and must not be used to power any external circuitry. See the *i.MX 6SoloX Applications Processor Reference Manual* (IMX6SXRM) for details on the power tree scheme.

NOTE

The *_CAP signals must not be powered externally. These signals are intended for internal LDO operation only.

4.3.1 Digital Regulators (LDO_ARM, LDO_SOC, LDO_PCIE)

There are three digital LDO regulators ("Digital", because of the logic loads that they drive, not because of their construction). The advantages of the regulators are to reduce the input supply variation because of their input supply ripple rejection and their on-die trimming. This translates into more stable voltage for the on-chip logic.

These regulators have two basic modes:

- Power Gate. The regulation FET is switched fully off limiting the current draw from the supply. The analog part of the regulator is powered down here limiting the power consumption.
- Analog regulation mode. The regulation FET is controlled such that the output voltage of the regulator equals the programmed target voltage. The target voltage is fully programmable in 25 mV steps.

For additional information, see the *i.MX 6SoloX Applications Processor Reference Manual* (IMX6SXRM).

4.3.2 Regulators for Analog Modules

4.3.2.1 LDO_1P1

The LDO_1P1 regulator implements a programmable linear-regulator function from VDD_HIGH_IN (see Table 10 for minimum and maximum input requirements). Typical Programming Operating Range is 1.0 V to 1.2 V with the nominal default setting as 1.1 V. The LDO_1P1 supplies the USB Phy, LVDS Phy, and PLLs. A programmable brown-out detector is included in the regulator that can be used by the system to determine when the load capability of the regulator is being exceeded to take the necessary steps. Active-pull-down can also be enabled for systems requiring this feature.

For information on external capacitor requirements for this regulator, see the Hardware Development Guide for i.MX 6SoloX Applications Processors (IMX6XHDG).

For additional information, see the *i.MX 6SoloX Applications Processor Reference Manual* (IMX6SXRM).

4.3.2.2 LDO_2P5

The LDO_2P5 module implements a programmable linear-regulator function from VDD_HIGH_IN (see Table 10 for minimum and maximum input requirements). Typical Programming Operating Range is 2.25 V to 2.75 V with the nominal default setting as 2.5 V. LDO_2P5 supplies the DDR IOs, USB Phy, LVDS Phy, E-fuse module, and PLLs. A programmable brown-out detector is included in the regulator that can be used by the system to determine when the load capability of the regulator is being exceeded, to take the necessary steps. Active-pull-down can also be enabled for systems requiring this feature. An alternate self-biased low-precision weak-regulator is included that can be enabled for applications needing to keep the output voltage alive during low-power modes where the main regulator driver and its associated global bandgap reference module are disabled. The output of the weak-regulator is not programmable and is a function of the input supply as well as the load current. Typically, with a 3 V input supply the weak-regulator output is 2.525 V and its output impedance is approximately 40 Ω.

For information on external capacitor requirements for this regulator, see the Hardware Development Guide for i.MX 6SoloX Applications Processors (IMX6XHDG).

For additional information, see the *i.MX 6SoloX Applications Processor Reference Manual* (IMX6SXRM).

4.3.2.3 LDO_USB

The LDO_USB module implements a programmable linear-regulator function from the USB_OTG1_VBUS and USB_OTG2_VBUS voltages (4.4 V–5.5 V) to produce a nominal 3.0 V output voltage. A programmable brown-out detector is included in the regulator that can be used by the system to determine when the load capability of the regulator is being exceeded, to take the necessary steps. This regulator has a built in power-mux that allows the user to select to run the regulator from either USB_VBUS supply, when both are present. If only one of the USB_VBUS voltages is present, then, the regulator automatically selects this supply. Current limit is also included to help the system meet in-rush current targets.

For information on external capacitor requirements for this regulator, see the Hardware Development Guide for i.MX 6SoloX Applications Processors (IMX6XHDG).

For additional information, see the *i.MX 6SoloX Applications Processor Reference Manual* (IMX6SXRM).

4.4 PLL Electrical Characteristics

4.4.1 Audio/Video PLL Electrical Parameters

Table 18. Audio/Video PLL Electrical Parameters

Parameter	Value
Clock output range	650 MHz ~1.3 GHz
Reference clock	24 MHz
Lock time	<11250 reference cycles

4.4.2 528 MHz PLL

Table 19. 528 MHz PLL Electrical Parameters

Parameter	Value
Clock output range	528 MHz PLL output
Reference clock	24 MHz
Lock time	<11250 reference cycles

4.4.3 Ethernet PLL

Table 20. Ethernet PLL Electrical Parameters

Parameter	Value
Clock output range	500 MHz
Reference clock	24 MHz
Lock time	<11250 reference cycles

4.4.4 480 MHz PLL

Table 21. 480 MHz PLL Electrical Parameters

Parameter	Value
Clock output range	480 MHz PLL output
Reference clock	24 MHz
Lock time	<383 reference cycles

4.4.5 Arm PLL

Table 22. Arm PLL Electrical Parameters

Parameter	Value
Clock output range	650 MHz ~ 1.3 GHz
Reference clock	24 MHz
Lock time	<2250 reference cycles

4.5 On-Chip Oscillators

4.5.1 OSC24M

This block implements an amplifier that when combined with a suitable quartz crystal and external load capacitors implements an oscillator. The oscillator is powered from NVCC_PLL.

The system crystal oscillator consists of a Pierce-type structure running off the digital supply. A straight forward biased-inverter implementation is used.

4.5.2 OSC32K

This block implements an amplifier that when combined with a suitable quartz crystal and external load capacitors implements a low power oscillator. It also implements a power mux such that it can be powered from either a ~3 V backup battery (VDD_SNVS_IN) or VDD_HIGH_IN such as the oscillator consumes power from VDD_HIGH_IN when that supply is available and transitions to the back up battery when VDD_HIGH_IN is lost.

Additionally, if the clock monitor determines that the OSC32K is not present, then the source of the 32 kHz clock will automatically switch to the internal ring oscillator.

CAUTION

The internal RTC oscillator does not provide an accurate frequency and is affected by process, voltage, and temperature variations. NXP strongly recommends using an external crystal as the RTC_XTALI reference. If the internal oscillator is used, careful consideration must be given to the timing implications on all of the SoC modules dependent on this clock.

The OSC32K runs from VDD_SNVS_CAP supply, which comes from the VDD_HIGH_IN/ VDD_SNVS_IN.

Table 23. OSC32K Main Characteristics

Characteristics	Min	Typ	Max	Comments
Fosc	—	32.768 KHz	—	This frequency is nominal and determined mainly by the crystal selected. 32.0 K would work as well.
Current consumption	—	4 μA	—	The 4 μA is the consumption of the oscillator alone (OSC32K). Total supply consumption will depend on what the digital portion of the RTC consumes. The ring oscillator consumes 1 μA when ring oscillator is inactive, 20 μA when the ring oscillator is running. Another 1.5 μA is drawn from VDD_SNVS_IN in the power_detect block. So, the total current is 6.5 μA on VDD_SNVS_IN when the ring oscillator is not running.
Bias resistor	—	14 MΩ	—	This the integrated bias resistor that sets the amplifier into a high gain state. Any leakage through the ESD network, external board leakage, or even a scope probe that is significant relative to this value will debias the amp. The debiasing will result in low gain, and will impact the circuit's ability to start up and maintain oscillations.
Crystal Properties				
Cload	—	10 pF	—	Usually crystals can be purchased tuned for different Cloads. This Cload value is typically 1/2 of the capacitances realized on the PCB on either side of the quartz. A higher Cload will decrease oscillation margin, but increases current oscillating through the crystal.
ESR	—	50 kΩ	100 kΩ	Equivalent series resistance of the crystal. Choosing a crystal with a higher value will decrease the oscillating margin.

4.6 I/O DC Parameters

This section includes the DC parameters of the following I/O types:

- General Purpose I/O (GPIO)
- Double Data Rate I/O (DDR) for LPDDR2 and DDR3 modes
- LVDS I/O

NOTE

The term ‘OVDD’ in this section refers to the associated supply rail of an input or output.

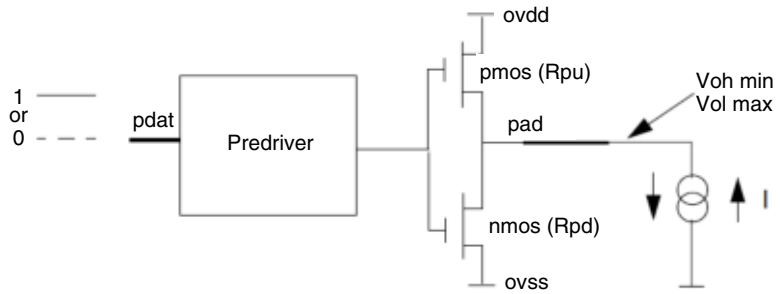

Figure 3. Circuit for Parameters Voh and Vol for I/O Cells

4.6.1 XTALI and RTC_XTALI (Clock Inputs) DC Parameters

Table 24 shows the DC parameters for the clock inputs.

Table 24. XTALI and RTC_XTALI DC Parameters

Parameter	Symbol	Test Conditions	Min	Typ	Max	Unit
XTALI high-level DC input voltage	Vih	—	0.8 x NVCC_PLL	—	NVCC_PLL	V
XTALI low-level DC input voltage	Vil	—	0	—	0.2V	V
RTC_XTALI high-level DC input voltage	Vih	—	0.8	—	1.1[1]	V
RTC_XTALI low-level DC input voltage	Vil	—	0	—	0.2	V
Input Capacitance	C_{IN}	Simulated data	—	5	—	pF
Startup current	$I_{XTALI_STARTUP}$	Power-on startup for 0.15msec with a driven 24 MHz clock at 1.1V. This current draw is present even if an external clock source directly drives XTALI	—	—	600	uA
DC input current	I_{XTALI_DC}	—	—	—	2.5	uA

[1] This voltage specification must not be exceeded and, as such, is an absolute maximum specification.

NOTE

The Vil and Vih specifications only apply when an external clock source is used. If a crystal is used, Vil and Vih do not apply.

4.6.2 Single Voltage General Purpose I/O (GPIO) DC Parameters

Table 25 shows DC parameters for GPIO pads. The parameters in Table 25 are guaranteed per the operating ranges in Table 10, unless otherwise noted.

Table 25. Single Voltage GPIO DC Parameters

Parameter	Symbol	Test Conditions	Min	Max	Units
High-level output voltage[1]	V_{OH}	Ioh= -0.1mA (DSE=001,010) Ioh= -1mA (DSE=011,100,101,110,111)	OVDD-0.15	–	V
Low-level output voltage[1]	VOL	Iol= 0.1mA (DSE=001,010) Iol= 1mA (DSE=011,100,101,110,111)	–	0.15	V
High-Level input voltage[1,2]	VIH	—	0.7*OVDD	OVDD	V
Low-Level input voltage[1,2]	VIL	—	0	0.3*OVDD	V
Input Hysteresis (OVDD= 1.8V)	VHYS_Low VDD	OVDD=1.8 V	250	—	mV
Input Hysteresis (OVDD=3.3V)	VHYS_High VDD	OVDD=3.3 V	250	—	mV
Schmitt trigger VT+ [2,3]	VTH+	—	0.5*OVDD	—	mV

Table 25. Single Voltage GPIO DC Parameters (continued)

Parameter	Symbol	Test Conditions	Min	Max	Units
Schmitt trigger VT- [2,3]	VTH-	—	—	0.5*OVDD	mV
Pull-up resistor (22_kΩ PU)	RPU_22K	Vin=0V	—	212	uA
Pull-up resistor (22_kΩ PU)	RPU_22K	Vin=OVDD	—	1	uA
Pull-up resistor (47_kΩ PU)	RPU_47K	Vin=0V	—	100	uA
Pull-up resistor (47_kΩ PU)	RPU_47K	Vin=OVDD	—	1	uA
Pull-up resistor (100_kΩ PU)	RPU_100K	Vin=0V	—	48	uA
Pull-up resistor (100_kΩ PU)	RPU_100K	Vin=OVDD	—	1	uA
Pull-down resistor (100_kΩ PD)	RPD_100K	Vin=OVDD	—	48	uA
Pull-down resistor (100_kΩ PD)	RPD_100K	Vin=0V	—	1	uA
Input current (no PU/PD)	IIN	VI = 0, VI = OVDD	-1	1	uA
Keeper Circuit Resistance	R_Keeper	VI =0.3*OVDD, VI = 0.7* OVDD	105	175	kΩ

1 Overshoot and undershoot conditions (transitions above OVDD and below GND) on switching pads must be held below 0.6 V, and the duration of the overshoot/undershoot must not exceed 10% of the system clock cycle. Overshoot/ undershoot must be controlled through printed circuit board layout, transmission line impedance matching, signal line termination, or other methods. Non-compliance to this specification may affect device reliability or cause permanent damage to the device.

2 To maintain a valid level, the transition edge of the input must sustain a constant slew rate (monotonic) from the current DC level through to the target DC level, Vil or Vih. Monotonic input transition time is from 0.1 ns to 1 s.

3 Hysteresis of 250 mV is guaranteed over all operating conditions when hysteresis is enabled.

4.6.3 Dual Voltage GPIO I/O DC Parameters

Table 26 shows DC parameters for GPIO pads. The parameters in Table 26 are guaranteed per the operating ranges in Table 10, unless otherwise noted.

Table 26. Dual Voltage GPIO I/O DC Parameters

Parameter	Symbol	Test Conditions	Min	Max	Unit
High-level output voltage[1]	Voh	Ioh = -0.1 mA (DSE[2] = 001, 010) Ioh = -1 mA (DSE = 011, 100, 101, 110, 111)	OVDD – 0.15	—	V
Low-level output voltage[1]	Vol	Iol = 0.1 mA (DSE = 001, 010) Iol = 1mA (DSE = 011, 100, 101, 110, 111)	—	0.15	V
High-Level DC input voltage [1,3]	Vih	—	0.7 × OVDD	OVDD	V
Low-Level DC input voltage[1,3]	Vil	—	0	0.3 × OVDD	V
Input Hysteresis	Vhys	OVDD = 1.8 V OVDD = 3.3 V	0.25	—	V
Schmitt trigger VT+ [3,4]	VT+	—	0.5 × OVDD	—	V
Schmitt trigger VT– [3,4]	VT–	—	—	0.5 × OVDD	V

Table 26. Dual Voltage GPIO I/O DC Parameters (continued)

Parameter	Symbol	Test Conditions	Min	Max	Unit
Input current (no pull-up/down)	Iin	Vin = OVDD or 0	-1.25	1.25	µA
Input current (22 kΩ pull-up)	Iin	Vin = 0 V Vin = OVDD	—	212 1	µA
Input current (47 kΩ pull-up)	Iin	Vin = 0 V Vin = OVDD	—	100 1	µA
Input current (100 kΩ pull-up)	Iin	Vin = 0 V Vin= OVDD	—	48 1	µA
Input current (100 kΩ pull-down)	Iin	Vin = 0 V Vin = OVDD	—	1 48	µA
Keeper circuit resistance	Rkeep	Vin = 0.3 x OVDD Vin = 0.7 x OVDD	105	205	kΩ

1 Overshoot and undershoot conditions (transitions above OVDD and below GND) on switching pads must be held below 0.6 V, and the duration of the overshoot/undershoot must not exceed 10% of the system clock cycle. Overshoot/ undershoot must be controlled through printed circuit board layout, transmission line impedance matching, signal line termination, or other methods. Non-compliance to this specification may affect device reliability or cause permanent damage to the device.

2 DSE is the Drive Strength Field setting in the associated IOMUX control register.

3 To maintain a valid level, the transition edge of the input must sustain a constant slew rate (monotonic) from the current DC level through to the target DC level, Vil or Vih. Monotonic input transition time is from 0.1 ns to 1 s.

4 Hysteresis of 250 mV is guaranteed over all operating conditions when hysteresis is enabled.

4.6.4 DDR I/O DC Parameters

The DDR I/O pads support LPDDR2 and DDR3/DDR3L operational modes.

4.6.4.1 LPDDR2 Mode I/O DC Parameters

For details on supported DDR memory configurations, see Section 4.10, “Multi-mode DDR Controller (MMDC).

Table 27. LPDDR2 I/O DC Electrical Parameters[1]

Parameters	Symbol	Test Conditions	Min	Max	Unit
High-level output voltage	VOH	Ioh= -0.1mA	0.9*OVDD	—	V
Low-level output voltage	VOL	Iol= 0.1mA	—	0.1*OVDD	V
Input Reference Voltage	Vref	—	0.49*OVDD	0.51*OVDD	V
DC High-Level input voltage	Vih_DC	—	Vref+0.13	OVDD	V
DC Low-Level input voltage	Vil_DC	—	OVSS	Vref-0.13	V
Differential Input Logic High	Vih_diff	—	0.26	Note[2]	—
Differential Input Logic Low	Vil_diff	—	Note[3]	-0.26	—
Pull-up/Pull-down Impedance Mismatch	Mmpupd	—	-15	15	%
240 Ω unit calibration resolution	Rres	—	—	10	Ω

Table 27. LPDDR2 I/O DC Electrical Parameters[1] (continued)

Parameters	Symbol	Test Conditions	Min	Max	Unit
Keeper Circuit Resistance	Rkeep	—	110	175	kΩ
Input current (no pull-up/down)	Iin	VI = 0, VI = OVDD	-2.5	2.5	µA

1 Note that the JEDEC LPDDR2 specification (JESD209_2B) supersedes any specification in this document.

2 The single-ended signals need to be within the respective limits (Vih(dc) max, Vil(dc) min) for single-ended signals as well as the limitations for overshoot and undershoot.

3 The single-ended signals need to be within the respective limits (Vih(dc) max, Vil(dc) min) for single-ended signals as well as the limitations for overshoot and undershoot.

4.6.4.2 DDR3/DDR3L Mode I/O DC Parameters

For details on supported DDR memory configurations, see Section 4.10, "Multi-mode DDR Controller (MMDC). The parameters in Table 28 are guaranteed per the operating ranges in Table 10, unless otherwise noted.

Table 28. DDR3/DDR3L I/O DC Electrical Characteristics

Parameters	Symbol	Test Conditions	Min	Max	Unit
High-level output voltage	VOH	Ioh= -0.1mA Voh (for DSE=001)	0.8*OVDD[1]	—	V
Low-level output voltage	VOL	Iol= 0.1mA Vol (for DSE=001)	0.2*OVDD	V	—
High-level output voltage	VOH	Ioh= -1mA Voh (for all except DSE=001)	0.8*OVDD		V
Low-level output voltage	VOL	Iol= 1mA Vol (for all except DSE=001)	0.2*OVDD	V	—
Input Reference Voltage	Vref	—	0.49*ovdd	0.51*ovdd	V
DC High-Level input voltage	Vih_DC	—	Vref[2]+0.1	OVDD	V
DC Low-Level input voltage	Vil_DC	—	OVSS	Vref-0.1	V
Differential Input Logic High	Vih_diff	—	0.2	See Note[3]	V
Differential Input Logic Low	Vil_diff	—	See Note	-0.2	V
Termination Voltage	Vtt	Vtt tracking OVDD/2	0.49*OVDD	0.51*OVDD	V
Pull-up/Pull-down Impedance Mismatch	Mmpupd	—	-10	10	%
240 Ω unit calibration resolution	Rres	—	—	10	Ω
Keeper Circuit Resistance	Rkeep	—	105	165	kΩ
Input current (no pull-up/down)	Iin	VI = 0,VI = OVDD	-2.9	2.9	µA

1 OVDD – I/O power supply (1.425 V–1.575 V for DDR3 and 1.283 V–1.45 V for DDR3L)

2 Vref – DDR3/DDR3L external reference voltage

3 The single-ended signals need to be within the respective limits (Vih(dc) max, Vil(dc) min) for single-ended signals as well as the limitations for overshoot and undershoot.

4.6.5 LVDS I/O DC Parameters

The LVDS interface complies with TIA/EIA 644-A standard. See TIA/EIA STANDARD 644-A, “Electrical Characteristics of Low Voltage Differential Signaling (LVDS) Interface Circuits” for details.

Table 29 shows the Low Voltage Differential Signaling (LVDS) I/O DC parameters.

Table 29. LVDS I/O DC Characteristics

Parameter	Symbol	Test Conditions	Min	Typ	Max	Unit
Output Differential Voltage	VOD	Rload-100 Ω Diff	250	350	450	mV
Output High Voltage	VOH	IOH = 0 mA	1.25	1.375	1.6	V
Output Low Voltage	VOL	IOL = 0 mA	0.9	1.025	1.25	V
Offset Voltage	VOS	—	1.125	1.2	1.375	V

4.7 I/O AC Parameters

This section includes the AC parameters of the following I/O types:

- General Purpose I/O (GPIO)
- Double Data Rate I/O (DDR) for LPDDR2 and DDR3/DDR3L modes
- LVDS I/O

The GPIO and DDR I/O load circuit and output transition time waveforms are shown in Figure 4 and Figure 5.

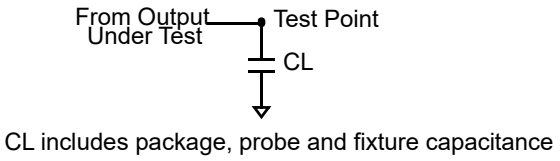

Figure 4. Load Circuit for Output

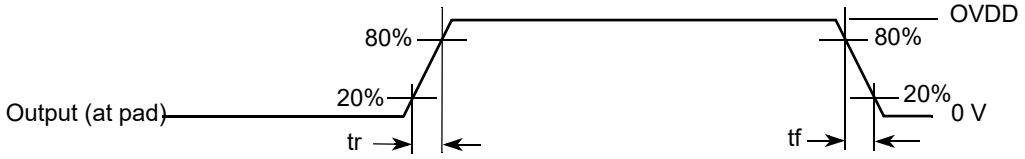

Figure 5. Output Transition Time Waveform

4.7.1 General Purpose I/O AC Parameters

The I/O AC parameters for GPIO in slow and fast modes are presented in the Table 30 and Table 31, respectively. Note that the fast or slow I/O behavior is determined by the appropriate control bits in the IOMUXC control registers.

Table 30. General Purpose I/O AC Parameters 1.8 V Mode

Parameter	Symbol	Test Condition	Min	Typ	Max	Unit
Output Pad Transition Times, rise/fall (Max Drive, DSE=111)	tr, tf	15 pF Cload, slow slew rate 15 pF Cload, fast slew rate	—	—	2.72/2.79 1.51/1.54	ns
Output Pad Transition Times, rise/fall (High Drive, DSE=101)	tr, tf	15 pF Cload, slow slew rate 15 pF Cload, fast slew rate	—	—	3.20/3.36 1.96/2.07	
Output Pad Transition Times, rise/fall (Medium Drive, DSE=100)	tr, tf	15 pF Cload, slow slew rate 15 pF Cload, fast slew rate	—	—	3.64/3.88 2.27/2.53	
Output Pad Transition Times, rise/fall (Low Drive. DSE=011)	tr, tf	15 pF Cload, slow slew rate 15 pF Cload, fast slew rate	—	—	4.32/4.50 3.16/3.17	
Input Transition Times[1]	trm	—	—	—	25	ns

[1] Hysteresis mode is recommended for inputs with transition times greater than 25 ns.

Table 31. General Purpose I/O AC Parameters 3.3 V Mode

Parameter	Symbol	Test Condition	Min	Typ	Max	Unit
Output Pad Transition Times, rise/fall (Max Drive, DSE=101)	tr, tf	15 pF Cload, slow slew rate 15 pF Cload, fast slew rate	—	—	1.70/1.79 1.06/1.15	ns
Output Pad Transition Times, rise/fall (High Drive, DSE=011)	tr, tf	15 pF Cload, slow slew rate 15 pF Cload, fast slew rate	—	—	2.35/2.43 1.74/1.77	
Output Pad Transition Times, rise/fall (Medium Drive, DSE=010)	tr, tf	15 pF Cload, slow slew rate 15 pF Cload, fast slew rate	—	—	3.13/3.29 2.46/2.60	
Output Pad Transition Times, rise/fall (Low Drive, DSE=001)	tr, tf	15 pF Cload, slow slew rate 15 pF Cload, fast slew rate	—	—	5.14/5.57 4.77/5.15	
Input Transition Times[1]	trm	—	—	—	25	ns

[1] Hysteresis mode is recommended for inputs with transition times greater than 25 ns.

4.7.2 DDR I/O AC Parameters

For details on supported DDR memory configurations, see Section 4.10, “Multi-mode DDR Controller (MMDC).

Table 32 shows the AC parameters for DDR I/O operating in LPDDR2 mode.

Table 32. DDR I/O LPDDR2 Mode AC Parameters[1]

Parameter	Symbol	Test Condition	Min	Max	Unit
AC input logic high	Vih(ac)	—	Vref + 0.22	OVDD	V
AC input logic low	Vil(ac)	—	0	Vref - 0.22	V
AC differential input high voltage[2]	Vidh(ac)	—	0.44	—	V
AC differential input low voltage	Vidl(ac)	—	—	0.44	V
Input AC differential cross point voltage[3]	Vix(ac)	Relative to Vref	-0.12	0.12	V
Over/undershoot peak	Vpeak	—	—	0.35	V

Table 32. DDR I/O LPDDR2 Mode AC Parameters[1] (continued)

Parameter	Symbol	Test Condition	Min	Max	Unit
Over/undershoot area (above OVDD or below OVSS)	Varea	400 MHz	—	0.3	V-ns
Single output slew rate, measured between Vol(ac) and Voh(ac)	tsr	50 Ω to Vref. 5 pF load. Drive impedance = 40 Ω ± 30%	1.5	3.5	V/ns
		50 Ω to Vref. 5pF load. Drive impedance = 60 Ω ± 30%	1	2.5	
Skew between pad rise/fall asymmetry + skew caused by SSN	t_{SKD}	clk = 400 MHz	—	0.1	ns

1 Note that the JEDEC LPDDR2 specification (JESD209_2B) supersedes any specification in this document.

2 Vid(ac) specifies the input differential voltage | Vtr - Vcp | required for switching, where Vtr is the “true” input signal and Vcp is the “complementary” input signal. The Minimum value is equal to Vih(ac) - Vil(ac).

3 The typical value of Vix(ac) is expected to be about 0.5 x OVDD. and Vix(ac) is expected to track variation of OVDD. Vix(ac) indicates the voltage at which differential input signal must cross.

Table 33 shows the AC parameters for DDR I/O operating in DDR3/DDR3L mode.

Table 33. DDR I/O DDR3/DDR3L Mode AC Parameters[1]

Parameter	Symbol	Test Condition	Min	Typ	Max	Unit
AC input logic high	Vih(ac)	—	Vref + 0.175	—	OVDD	V
AC input logic low	Vil(ac)	—	0	—	Vref - 0.175	V
AC differential input voltage[2]	Vid(ac)	—	0.35	—	—	V
Input AC differential cross point voltage[3,4]	Vix(ac)	Relative to Vref	Vref - 0.15	—	Vref + 0.15	V
Over/undershoot peak	Vpeak	—	—	—	0.4	V
Over/undershoot area (above OVDD or below OVSS)	Varea	400 MHz	—	—	0.5	V-ns
Single output slew rate, measured between Vol(ac) and Voh(ac)	tsr	Driver impedance = 34 Ω	2.5	—	5	V/ns
Skew between pad rise/fall asymmetry + skew caused by SSN	t_{SKD}	clk = 400 MHz	—	—	0.1	ns

1 Note that the JEDEC JESD79_3C specification supersedes any specification in this document.

2 Vid(ac) specifies the input differential voltage | Vtr-Vcp | required for switching, where Vtr is the “true” input signal and Vcp is the “complementary” input signal. The Minimum value is equal to Vih(ac) - Vil(ac).

3 The typical value of Vix(ac) is expected to be about 0.5 x OVDD. and Vix(ac) is expected to track variation of OVDD. Vix(ac) indicates the voltage at which differential input signal must cross.

4 Extended range for Vix is only allowed for the clock and when the single-ended clock input signals CK and CK# are:
Monotonic with a single-ended swing VSEL/VSEH of at least VDD/2 ±250 mV, and
The differential slew rate of CK - CK# is larger than 3 V/ns

4.7.3 LVDS I/O AC Parameters

The differential output transition time waveform is shown in Figure 6.

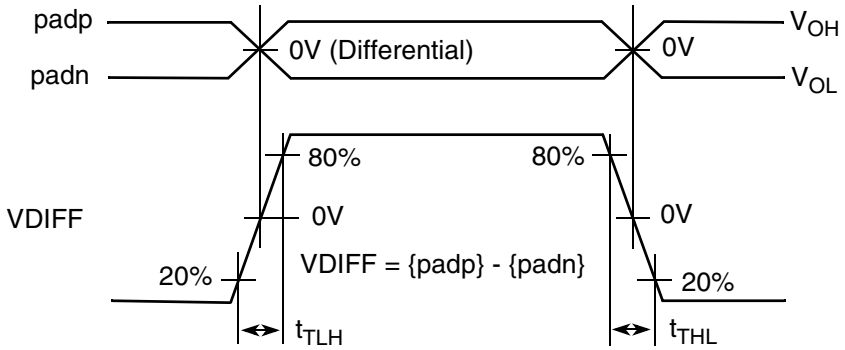

Figure 6. Differential LVDS Driver Transition Time Waveform

Table 34 shows the AC parameters for LVDS I/O.

Table 34. I/O AC Parameters of LVDS Pad

Parameter	Symbol	Test Condition	Min	Typ	Max	Unit
Differential pulse skew[1]	t_{SKD}	Rload = 100 Ω, Cload = 2 pF	—	—	0.25	ns
Transition Low to High Time[2]	t_{TLH}		—	—	0.5	
Transition High to Low Time[2]	t_{THL}		—	—	0.5	
Operating Frequency	f	—	—	600	800	MHz
Offset voltage imbalance	Vos	—	—	—	150	mV

[1] $t_{SKD} = | t_{PHLD} - t_{PLHD} |$, is the magnitude difference in differential propagation delay time between the positive going edge and the negative going edge of the same channel.

[2] Measurement levels are 20-80% from output voltage.

4.8 Output Buffer Impedance Parameters

This section defines the I/O impedance parameters of the i.MX 6SoloX processors for the following I/O types:

- Dual Voltage General Purpose I/O (DVGPIO)
- Single Voltage General Purpose I/O (GPIO)
- Double Data Rate I/O (DDR) for LPDDR2, and DDR3/DDR3L modes
- LVDS I/O

NOTE

GPIO and DDR I/O output driver impedance is measured with “long” transmission line of impedance Ztl attached to I/O pad and incident wave launched into transmission line. Rpu/Rpd and Ztl form a voltage divider that defines specific voltage of incident wave relative to OVDD. Output driver impedance is calculated from this voltage divider (see Figure 7).

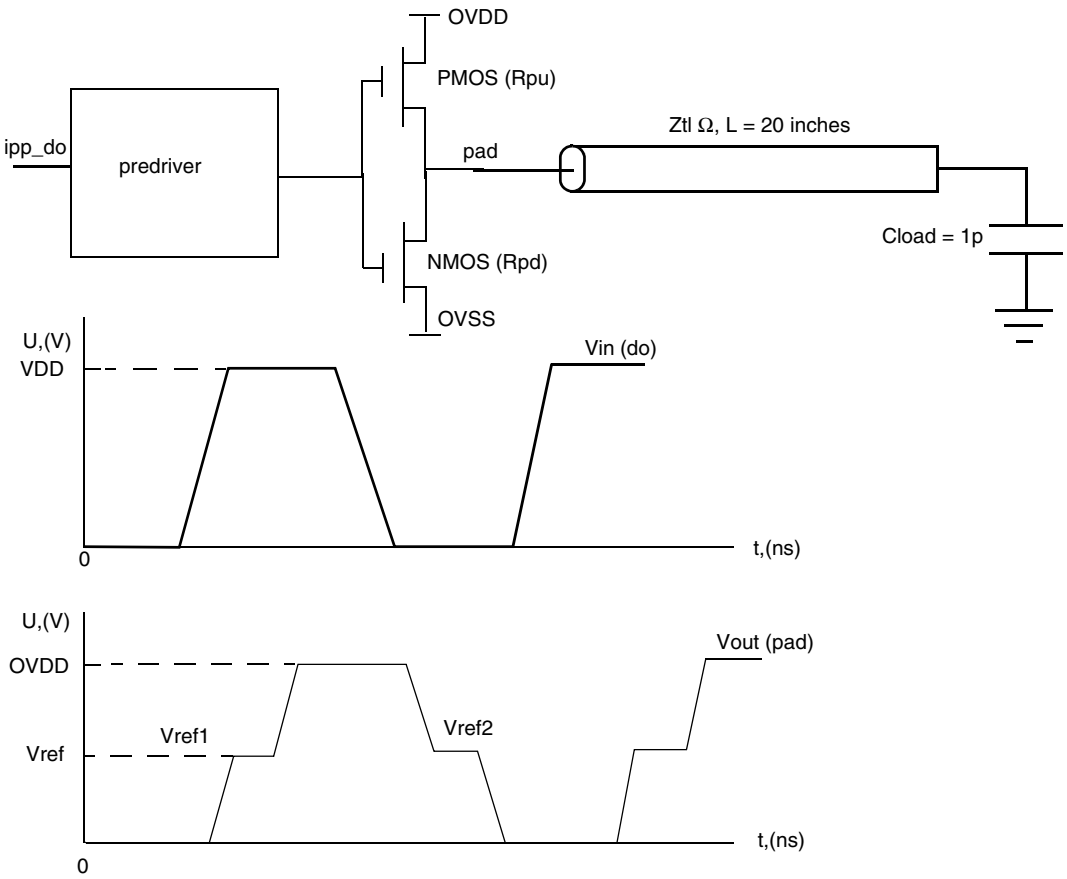

$$Rpu = \frac{Vovdd - Vref1}{Vref1} \times Ztl$$

$$Rpd = \frac{Vref2}{Vovdd - Vref2} \times Ztl$$

Figure 7. Impedance Matching Load for Measurement

4.8.1 Dual Voltage GPIO Output Buffer Impedance

Table 35 shows the GPIO output buffer impedance (OVDD 1.8 V).

Table 35. DVGPIO Output Buffer Average Impedance (OVDD 1.8 V)

Parameter	Symbol	Drive Strength (DSE)	Typical	Typical	Unit
			ADD_DS=1	ADD_DS=0	
Output Driver Impedance	Rdrv	000	Hi-Z	Hi-Z	Ω
		001	262	235	
		010	134	117	
		011	88	78	
		100	62	52	
		101	51	43	
		110	43	36	
		111	37	31	

Table 36 shows the GPIO output buffer impedance (OVDD 3.3 V).

Table 36. DVGPIO Output Buffer Average Impedance (OVDD 3.3 V)

Parameter	Symbol	Drive Strength (DSE)	Typical	Unit
Output Driver Impedance	Rdrv	000 001 010 011 100 101 110 111	Hi-Z 247 126 84 57 47 40 34	Ω

4.8.2 Single Voltage GPIO Output Buffer Impedance

Table 37 shows the GPIO output buffer impedance (OVDD 1.8 V).

Table 37. GPIO Output Buffer Average Impedance (OVDD 1.8 V)

Parameter	Symbol	Drive Strength (DSE)	Typ Value	Unit
Output Driver Impedance	Rdrv	001 010 011 100 101 110 111	260 130 88 65 52 43 37	Ω

Table 38 shows the GPIO output buffer impedance (OVDD 3.3 V).

Table 38. GPIO Output Buffer Average Impedance (OVDD 3.3 V)

Parameter	Symbol	Drive Strength (DSE)	Typ Value	Unit
Output Driver Impedance	Rdrv	001 010 011 100 101 110 111	157 78 53 39 32 26 23	Ω

4.8.3 DDR I/O Output Buffer Impedance

For details on supported DDR memory configurations, see Section 4.10, “Multi-mode DDR Controller (MMDC).

Table 39 shows DDR I/O output buffer impedance of i.MX 6SoloX processors.

Table 39. DDR I/O Output Buffer Impedance

Parameter	Symbol	Test Conditions DSE (Drive Strength)	Typical		Unit
			NVCC_DRAM=1.5 V (DDR3) DDR_SEL=11	NVCC_DRAM=1.2 V (LPDDR2) DDR_SEL=10	
Output Driver Impedance	Rdrv	000	Hi-Z	Hi-Z	Ω
		001	240	240	
		010	120	120	
		011	80	80	
		100	60	60	
		101	48	48	
		110	40	40	
		111	34	34	

Note:

1. Output driver impedance is controlled across PVTs using ZQ calibration procedure.
2. Calibration is done against 240 Ω external reference resistor.
3. Output driver impedance deviation (calibration accuracy) is ±5% (max/min impedance) across PVTs.

4.8.4 USB HSIC I/O Output Buffer Impedance

Table 40 shows the USB HSIC I/O (USB_H_DATA and USB_H_STROBE) output buffer impedance.

Table 40. USB HSIC I/O Output Buffer Impedance

Parameter	Symbol	Drive Strength (DSE)	Typical				Unit
			NVCC_USB_H=1.2V DDR_SEL=10	NVCC_USB_H=1.5V DDR_SEL=11	NVCC_USB_H=1.8V DDR_SEL=11	NVCC_USB_H=2.5V DDR_SEL=11	
Output Driver Impedance	Rdrv	000	Hi-Z	Hi-Z	Hi-Z	Hi-Z	Ω
		001	240	240	247	287	
		010	120	120	113	121	
		011	80	80	73	76	
		100	60	60	55	57	
		101	48	48	43	45	
		110	40	40	36	37	
		111	34	34	30	31	

4.8.5 LVDS I/O Output Buffer Impedance

The LVDS interface complies with TIA/EIA 644-A standard. See, TIA/EIA STANDARD 644-A, “Electrical Characteristics of Low Voltage Differential Signaling (LVDS) Interface Circuits” for details.

4.9 System Modules Timing

This section contains the timing and electrical parameters for the modules in each i.MX 6SoloX processor.

4.9.1 Reset Timing Parameters

Figure 8 shows the reset timing and Table 41 lists the timing parameters.

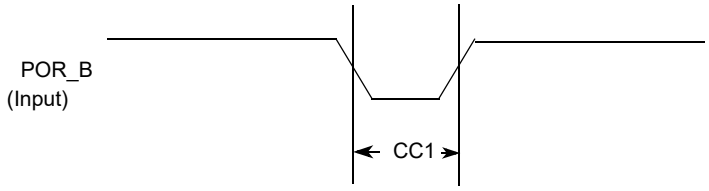

Figure 8. Reset Timing Diagram

Table 41. Reset Timing Parameters

ID	Parameter	Min	Max	Unit
CC1	Duration of POR_B to be qualified as valid.	1	—	RTC_XTALI cycle

4.9.2 WDOG Reset Timing Parameters

Figure 9 shows the WDOG reset timing and Table 42 lists the timing parameters.

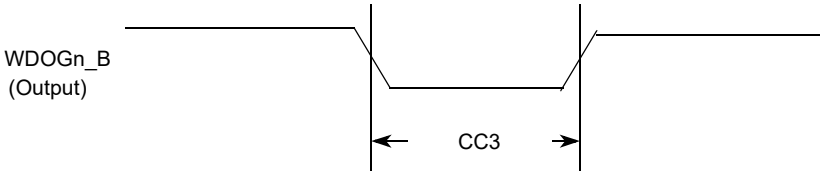

Figure 9. WDOGn_B Timing Diagram

Table 42. WDOGn_B Timing Parameters

ID	Parameter	Min	Max	Unit
CC3	Duration of WDOGn_B Assertion	1	—	RTC_XTALI cycle

NOTE

RTC_XTALI is approximately 32 kHz. RTC_XTALI cycle is one period or approximately 30 µs.

NOTE

WDOG1_B output signals (for each one of the Watchdog modules) do not have dedicated pins, but are muxed out through the IOMUX. See the IOMUX manual for detailed information.

4.9.3 External Interface Module (EIM)

The following subsections provide information on the EIM. Maximum operating frequency for EIM data transfer is 104 MHz. Two system clocks are used with the EIM:

- ACLK_EIM_SLOW_CLK_ROOT is used to clock the EIM module.
  The maximum frequency for CLK_EIM_SLOW_CLK_ROOT is 132 MHz.

- ACLK_EXSC is also used when the EIM is in synchronous mode.
  The maximum frequency for ACLK_EXSC is 132 MHz.

Timing parameters in this section that are given as a function of register settings.

4.9.3.1 EIM Interface Pads Allocation

EIM supports 32-bit, 16-bit and 8-bit devices operating in address/data separate or multiplexed modes. Table 43 provides EIM interface pads allocation in different modes.

Table 43. EIM Internal Module Multiplexing[1]

Setup	Non Multiplexed Address/Data Mode							Multiplexed Address/Data mode	
	8 Bit				16 Bit		32 Bit	16 Bit	32 Bit
	MUM = 0, DSZ = 100	MUM = 0, DSZ = 101	MUM = 0, DSZ = 110	MUM = 0, DSZ = 111	MUM = 0, DSZ = 001	MUM = 0, DSZ = 010	MUM = 0, DSZ = 011	MUM = 1, DSZ = 001	MUM = 1, DSZ = 011
EIM_ADDR [15:00]	EIM_AD [15:00]	EIM_AD [15:00]	EIM_AD [15:00]	EIM_AD [15:00]	EIM_AD [15:00]	EIM_AD [15:00]	EIM_AD [15:00]	EIM_AD [15:00]	EIM_AD [15:00]
EIM_ADDR [25:16]	EIM_ADDR [25:16]	EIM_ADDR [25:16]	EIM_ADDR [25:16]	EIM_ADDR [25:16]	EIM_ADDR [25:16]	EIM_ADDR [25:16]	EIM_ADDR [25:16]	EIM_ADDR [25:16]	EIM_DATA [09:00]
EIM_DATA [07:00], EIM_EB0_B	EIM_DATA [07:00]	—	—	—	EIM_DATA [07:00]	—	EIM_DATA [07:00]	EIM_AD [07:00]	EIM_AD [07:00]
EIM_DATA [15:08], EIM_EB1_B	—	EIM_DATA [15:08]	—	—	EIM_DATA [15:08]	—	EIM_DATA [15:08]	EIM_AD [15:08]	EIM_AD [15:08]
EIM_DATA [23:16], EIM_EB2_B	—	—	EIM_DATA [23:16]	—	—	EIM_DATA [23:16]	EIM_DATA [23:16]	—	EIM_DATA [07:00]
EIM_DATA [31:24], EIM_EB3_B	—	—	—	EIM_DATA [31:24]	—	EIM_DATA [31:24]	EIM_DATA [31:24]	—	EIM_DATA [15:08]

[1] For more information on configuration ports mentioned in this table, see the *i.MX 6SoloX Applications Processor Reference Manual* (IMX6SXRM).

4.9.3.2 General EIM Timing-Synchronous Mode

Figure 10, Figure 11, and Table 44 specify the timings related to the EIM module. All EIM output control signals may be asserted and deasserted by an internal clock synchronized to the EIM_BCLK rising edge according to corresponding assertion/negation control fields.

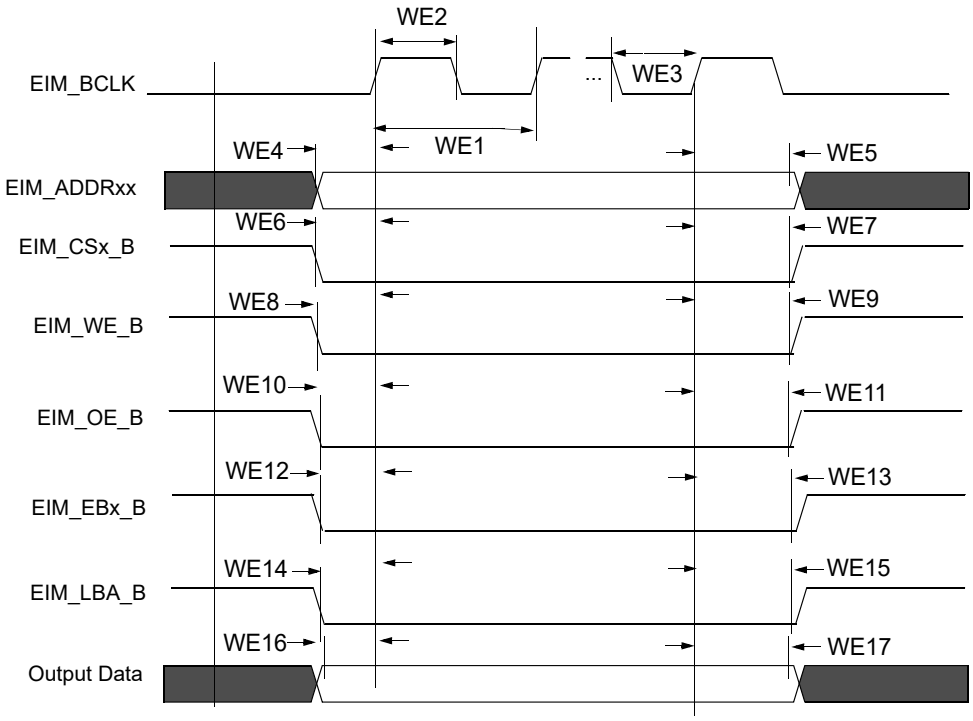

Figure 10. EIM Outputs Timing Diagram

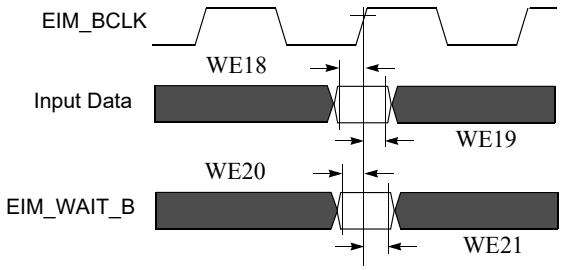

Figure 11. EIM Inputs Timing Diagram

4.9.3.3 Examples of EIM Synchronous Accesses

Table 44. EIM Bus Timing Parameters [1]

ID	Parameter	BCD = 0		BCD = 1		BCD = 2		BCD = 3	
		Min	Max	Min	Max	Min	Max	Min	Max
WE1	EIM_BCLK Cycle time[2]	t	—	2 x t	—	3 x t	—	4 x t	—
WE2	EIM_BCLK Low Level Width	0.4 x t	—	0.8 x t	—	1.2 x t	—	1.6 x t	—
WE3	EIM_BCLK High Level Width	0.4 x t	—	0.8 x t	—	1.2 x t	—	1.6 x t	—
WE4	Clock rise to address valid[3]	-0.5 x t - 1.25	-0.5 x t + 1.75	-t - 1.25	-t + 1.75	-1.5 x t - 1.25	-1.5 x t +1.75	-2 x t - 1.25	-2 x t + 1.75
WE5	Clock rise to address invalid	0.5 x t - 1.25	0.5 x t + 1.75	t - 1.25	t + 1.75	1.5 x t - 1.25	1.5 x t +1.75	2 x t - 1.25	2 x t + 1.75
WE6	Clock rise to EIM_CSx_B valid	-0.5 x t - 1.25	-0.5 x t + 1.75	-t - 1.25	- t + 1.75	-1.5 x t - 1.25	-1.5 x t +1.75	-2 x t - 1.25	-2 x t + 1.75
WE7	Clock rise to EIM_CSx_B invalid	0.5 x t - 1.25	0.5 x t + 1.75	t - 1.25	t + 1.75	1.5 x t - 1.25	1.5 x t +1.75	2 x t - 1.25	2 x t + 1.75
WE8	Clock rise to EIM_WE_B Valid	-0.5 x t - 1.25	-0.5 x t + 1.75	-t - 1.25	- t + 1.75	-1.5 x t - 1.25	-1.5 x t +1.75	-2 x t - 1.25	-2 x t + 1.75
WE9	Clock rise to EIM_WE_B Invalid	0.5 x t - 1.25	0.5 x t + 1.75	t - 1.25	t + 1.75	1.5 x t - 1.25	1.5 x t +1.75	2 x t - 1.25	2 x t + 1.75
WE10	Clock rise to EIM_OE_B Valid	-0.5 x t - 1.25	-0.5 x t + 1.75	-t - 1.25	- t + 1.75	-1.5 x t - 1.25	-1.5 x t +1.75	-2 x t - 1.25	-2 x t + 1.75
WE11	Clock rise to EIM_OE_B Invalid	0.5 x t - 1.25	0.5 x t + 1.75	t - 1.25	t + 1.75	1.5 x t - 1.25	1.5 x t +1.75	2 x t - 1.25	2 x t + 1.75
WE12	Clock rise to EIM_EBx_B Valid	-0.5 x t - 1.25	-0.5 x t + 1.75	-t - 1.25	- t + 1.75	-1.5 x t - 1.25	-1.5 x t +1.75	-2 x t - 1.25	-2 x t + 1.75
WE13	Clock rise to EIM_EBx_B Invalid	0.5 x t - 1.25	0.5 x t + 1.75	t - 1.25	t + 1.75	1.5 x t - 1.25	1.5 x t +1.75	2 x t - 1.25	2 x t + 1.75
WE14	Clock rise to EIM_LBA_B Valid	-0.5 x t - 1.25	-0.5 x t + 1.75	-t - 1.25	- t + 1.75	-1.5 x t - 1.25	-1.5 x t +1.75	-2 x t - 1.25	-2 x t + 1.75
WE15	Clock rise to EIM_LBA_B Invalid	0.5 x t - 1.25	0.5 x t + 1.75	t - 1.25	t + 1.75	1.5 x t - 1.25	1.5 x t +1.75	2 x t - 1.25	2 x t + 1.75
WE16	Clock rise to Output Data Valid	-0.5 x t - 1.25	-0.5 x t + 1.75	-t - 1.25	- t + 1.75	-1.5 x t - 1.25	-1.5 x t +1.75	-2 x t - 1.25	-2 x t + 1.75
WE17	Clock rise to Output Data Invalid	0.5 x t - 1.25	0.5 x t + 1.75	t - 1.25	t + 1.75	1.5 x t - 1.25	1.5 x t +1.75	2 x t - 1.25	2 x t + 1.75
WE18	Input Data setup time to Clock rise	2	—	4	—	—	—	—	—
WE19	Input Data hold time from Clock rise	2	—	2	—	—	—	—	—
WE20	EIM_WAIT_B setup time to Clock rise	2	—	4	—	—	—	—	—
WE21	EIM_WAIT_B hold time from Clock rise	2	—	2	—	—	—	—	—

[1] t is the maximum EIM logic (ACLK_EXSC) cycle time. The maximum allowed axi_clk frequency depends on the fixed/non-fixed latency configuration, whereas the maximum allowed EIM_BCLK frequency is:

—Fixed latency for both read and write is 104 MHz.

—Variable latency for read only is 104 MHz.

—Variable latency for write only is 52 MHz.

In variable latency configuration for write, if BCD = 0 & WBCDD = 1 or BCD = 1, axi_clk must be 104 MHz.Write BCD = 1 and 104 MHz ACLK_EXSC, will result in a EIM_BCLK of 52 MHz. When the clock branch to EIM is decreased to 104 MHz, other buses are impacted which are clocked from this source. See the CCM chapter of the *i.MX 6SoloX Applications Processor Reference Manual* (IMX6SXRM) for a detailed clock tree description.

[2] EIM_BCLK parameters are being measured from the 50% point, that is, high is defined as 50% of signal value and low is defined as 50% as signal value.

[3] For signal measurements, “High” is defined as 80% of signal value and “Low” is defined as 20% of signal value.

Figure 12 to Figure 15 provide few examples of basic EIM accesses to external memory devices with the timing parameters mentioned previously for specific control parameters settings.

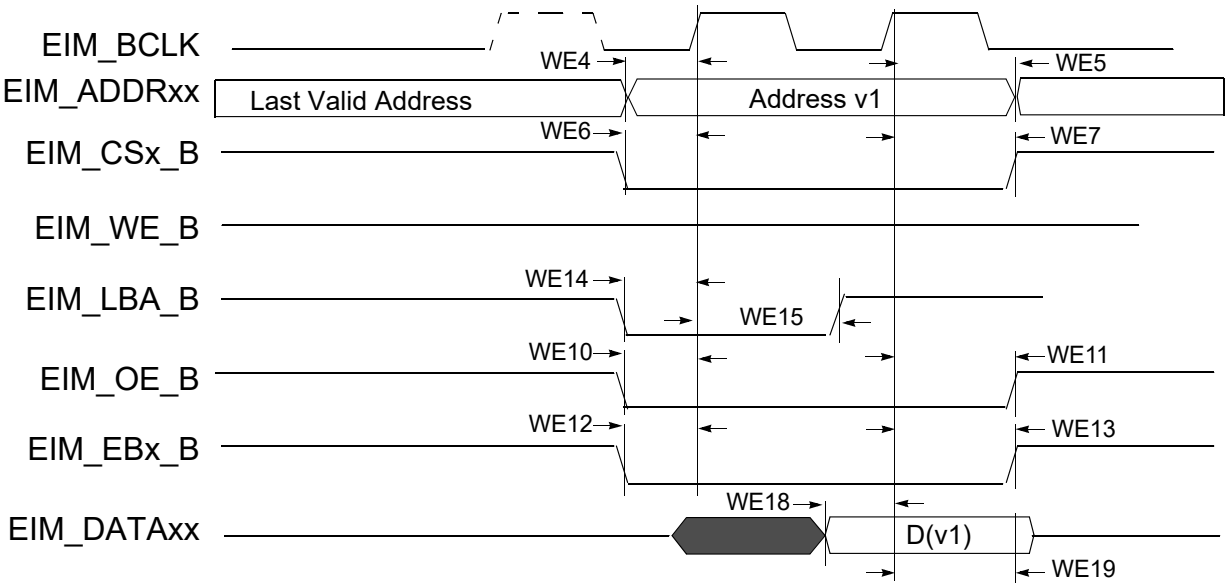

Figure 12. Synchronous Memory Read Access, WSC=1

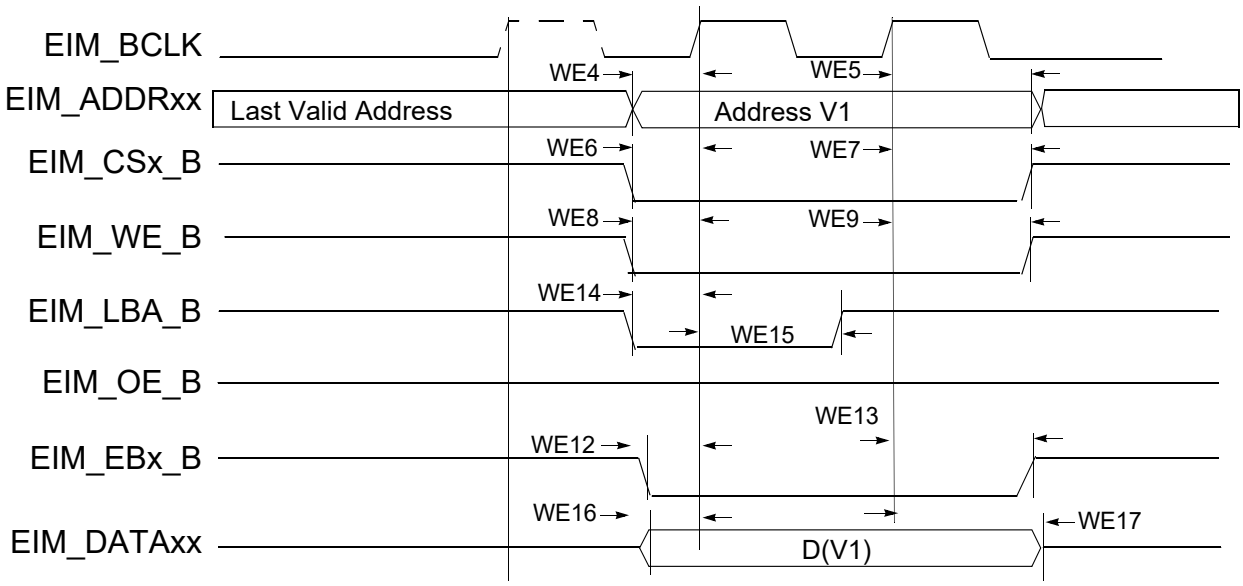

Figure 13. Synchronous Memory, Write Access, WSC=1, WBEA=0 and WADVN=0

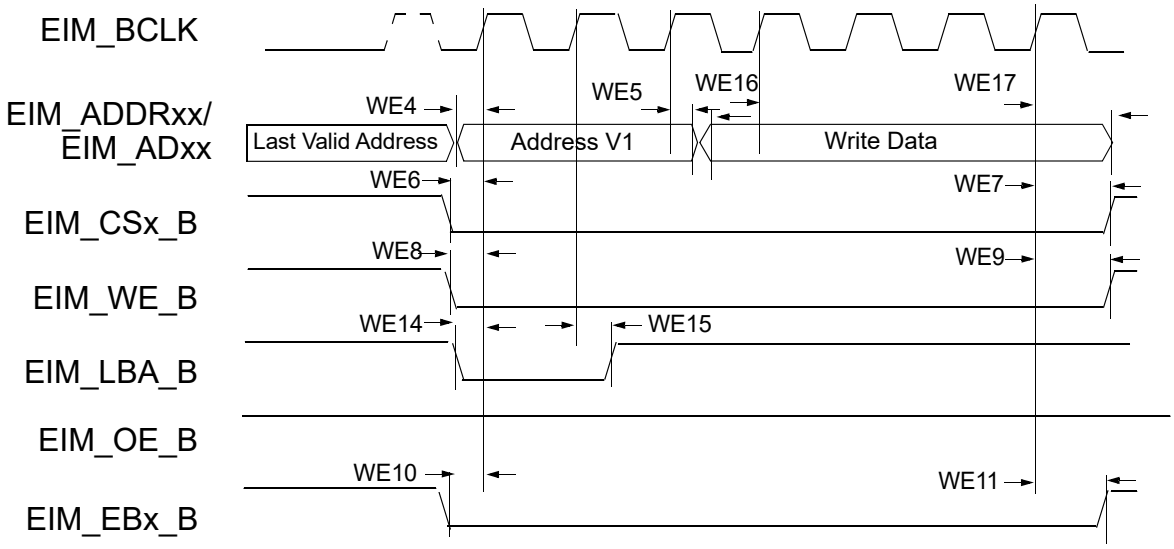

Figure 14. Muxed Address/Data (A/D) Mode, Synchronous Write Access, WSC=6, ADVA=0, ADVN=1, and ADH=1

NOTE

In 32-bit muxed address/data (A/D) mode the 16 MSBs are driven on the data bus.

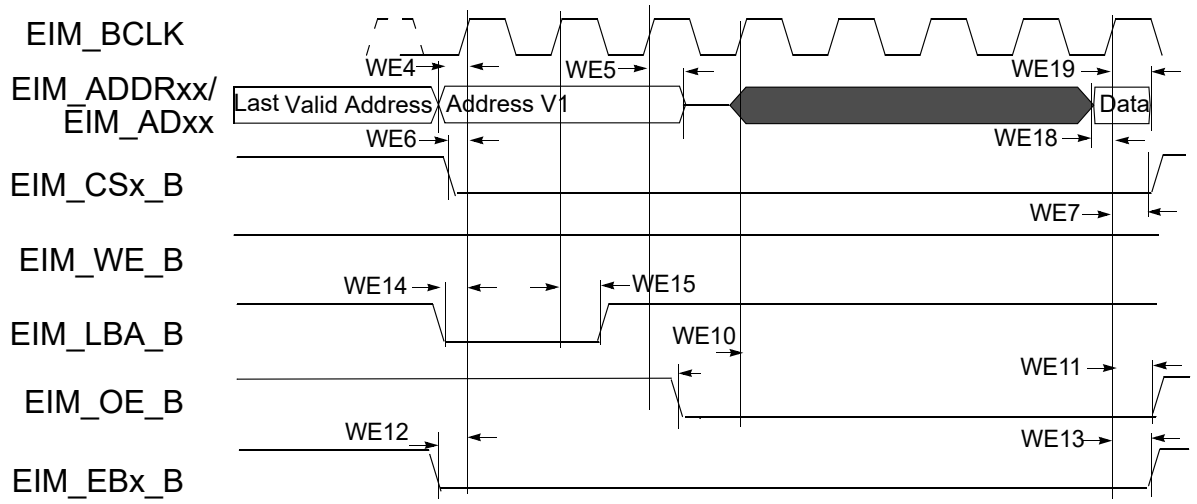

Figure 15. 16-Bit Muxed A/D Mode, Synchronous Read Access, WSC=7, RADVN=1, ADH=1, OEA=0

4.9.3.4 General EIM Timing-Asynchronous Mode

Figure 16 through Figure 21, and Table 45 help you determine timing parameters relative to the chip select (CS) state for asynchronous and DTACK EIM accesses with corresponding EIM bit fields and the timing parameters mentioned above.

Asynchronous read and write access length in cycles may vary from what is shown in Figure 16 through Figure 19 as RWSC, OEN and CSN is configured differently. See the *ii.MX 6SoloX Applications Processor Reference Manual* (IMX6SXRM) for the EIM programming model.

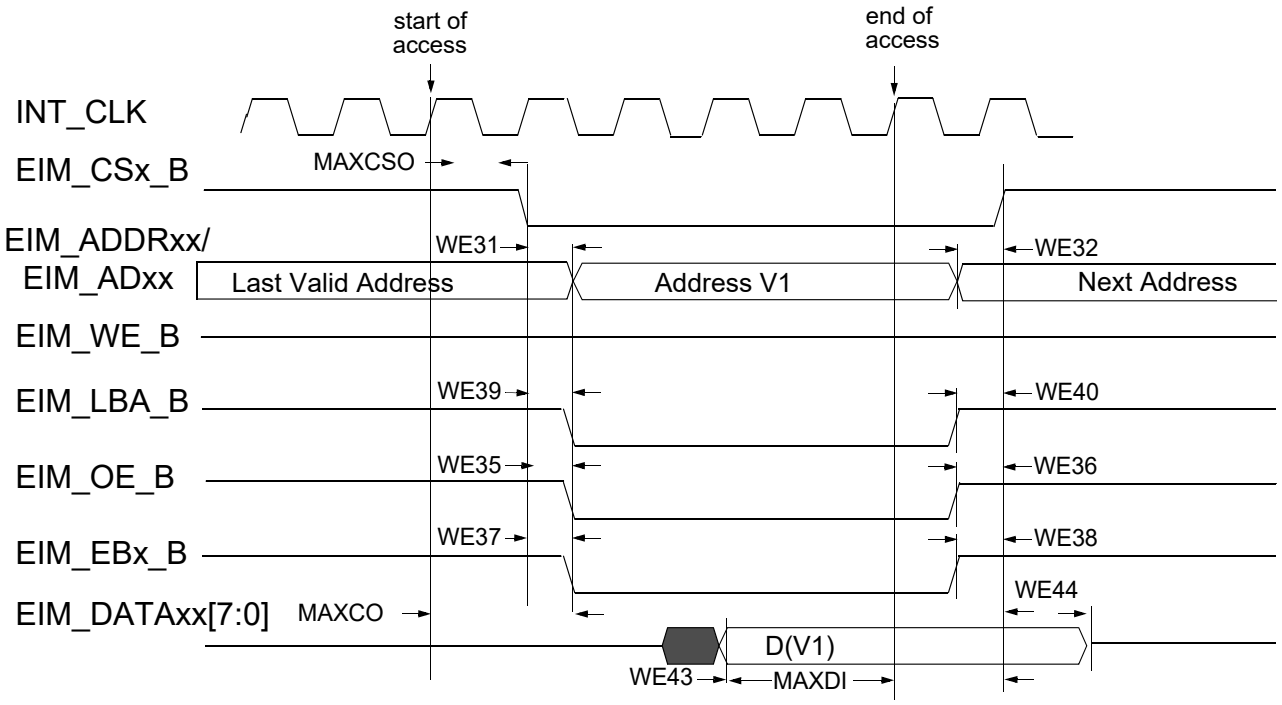

Figure 16. Asynchronous Memory Read Access (RWSC = 5)

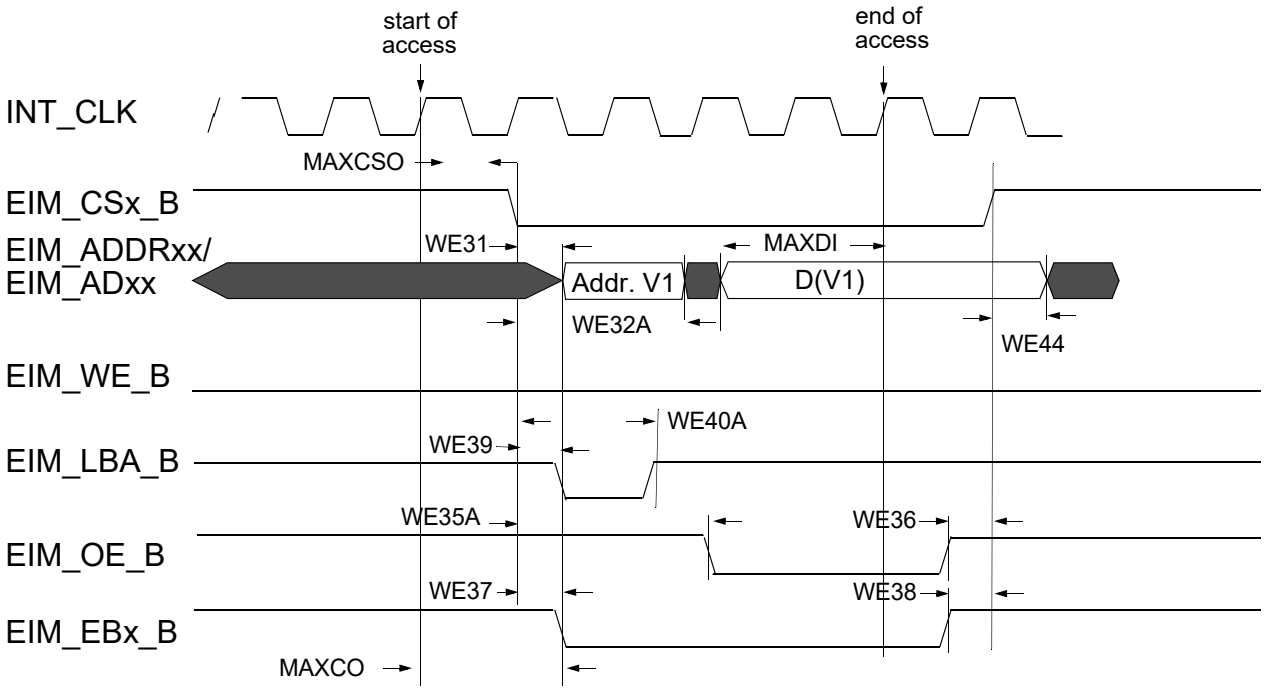

Figure 17. Asynchronous A/D Muxed Read Access (RWSC = 5)

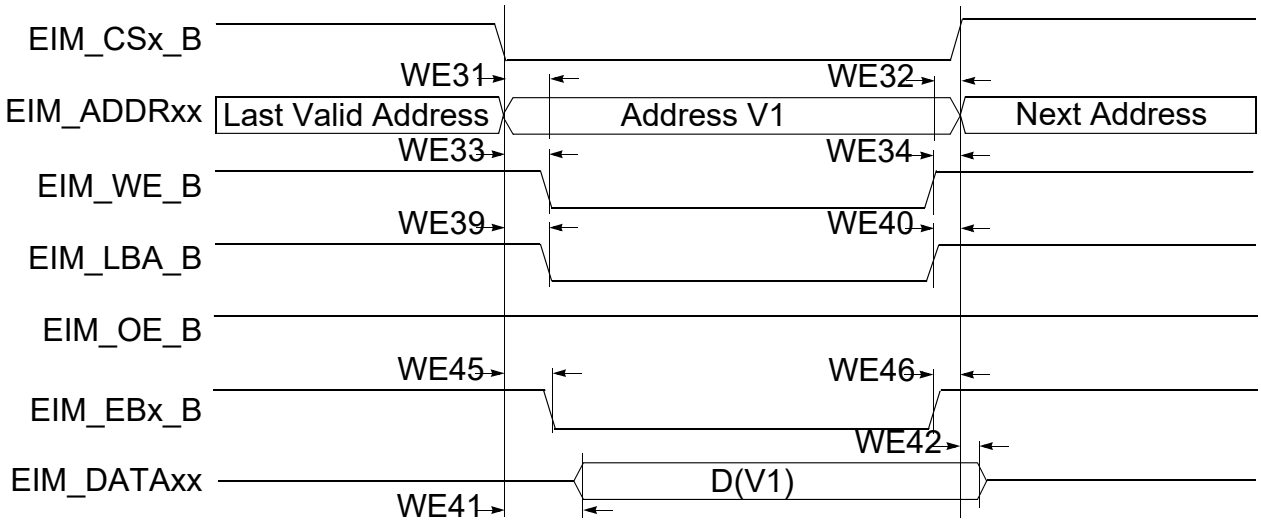

Figure 18. Asynchronous Memory Write Access

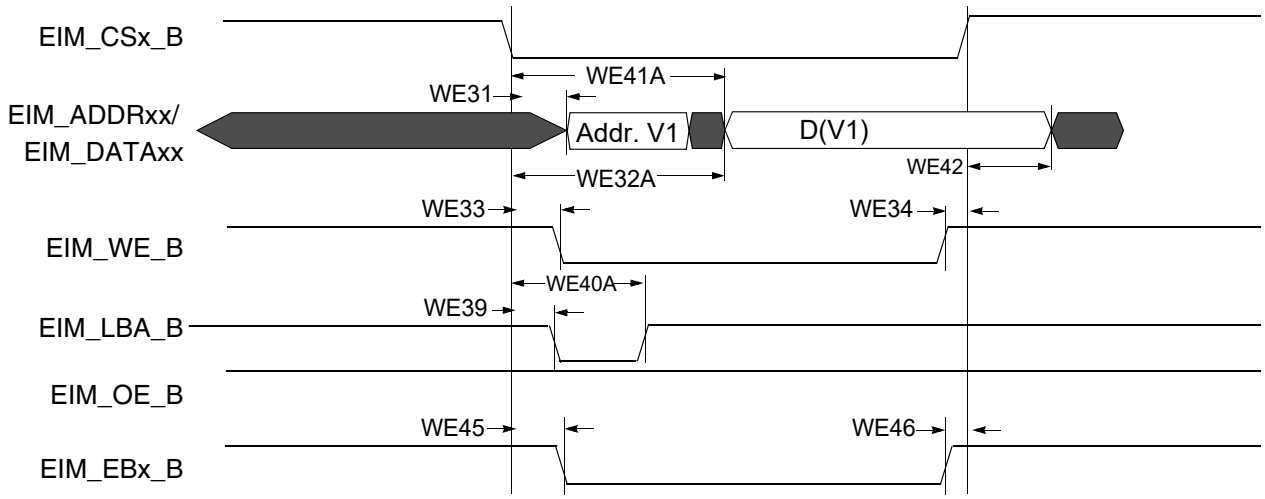

Figure 19. Asynchronous A/D Muxed Write Access

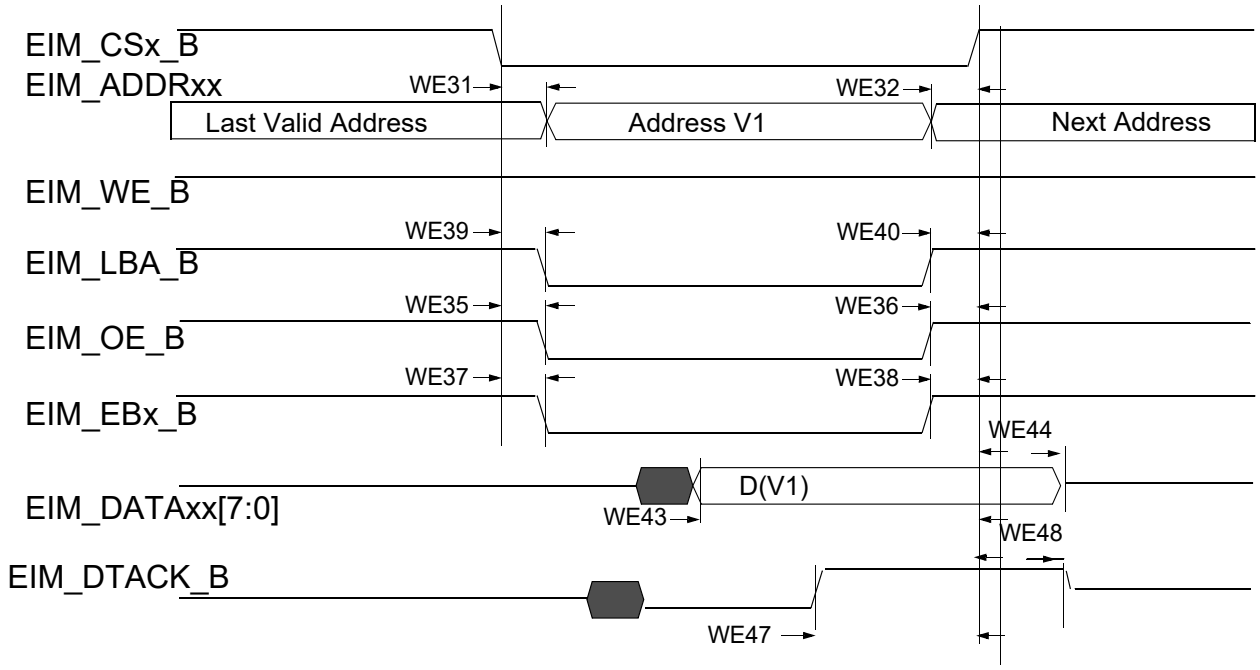

Figure 20. DTACK Mode Read Access (DAP=0)

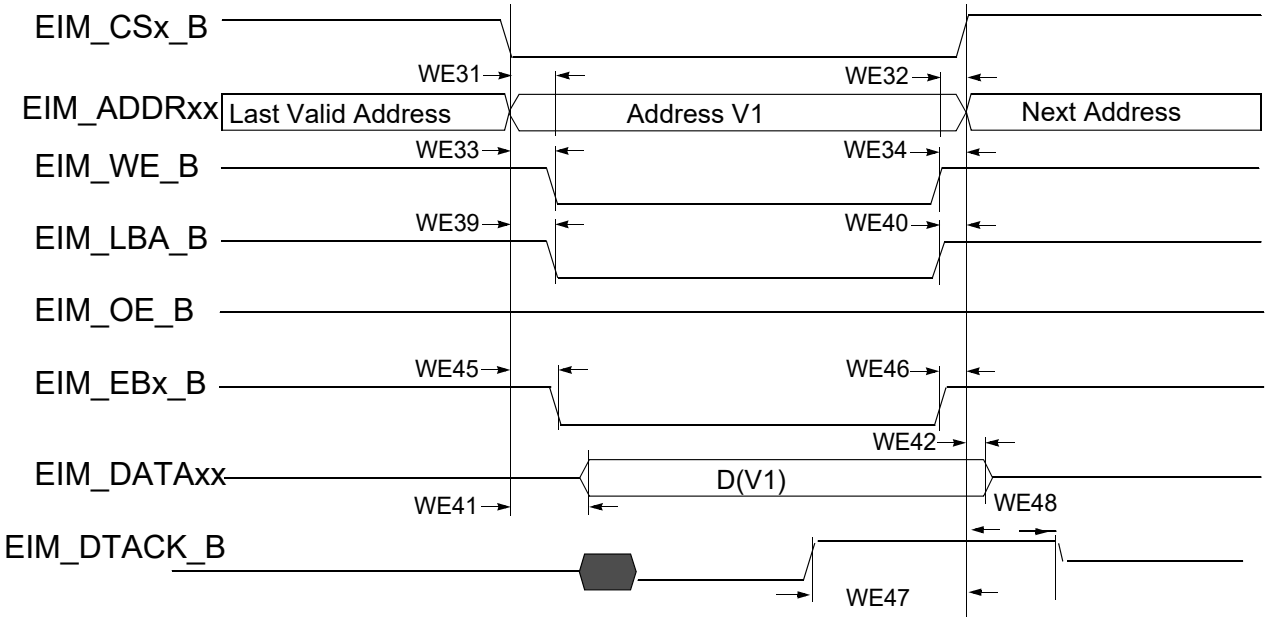

Figure 21. DTACK Mode Write Access (DAP=0)

Table 45. EIM Asynchronous Timing Parameters Relative to Chip Select[1,2]

Ref No.	Parameter	Determination by Synchronous measured parameters	Min	Max	Unit
WE31	EIM_CSx_B valid to Address Valid	WE4-WE6-CSA×t	-3.5-CSA×t	3.5-CSA×t	ns
WE32	Address Invalid to EIM_CSx_B Invalid	WE7-WE5-CSN×t	-3.5-CSN×t	3.5-CSN×t	ns
WE32A (muxed A/D)	EIM_CSx_B valid to Address Invalid	t+WE4-WE7+ (ADVN+ADVA+1-CSA)×t	t - 3.5+(ADVN+ADVA+1-CSA)×t	t + 3.5+(ADVN+ADVA+ 1-CSA)×t	ns
WE33	EIM_CSx_B Valid to EIM_WE_B Valid	WE8-WE6+(WEA-WCSA)×t	-3.5+(WEA-WCSA)×t	3.5+(WEA-WCSA)×t	ns
WE34	EIM_WE_B Invalid to EIM_CSx_B Invalid	WE7-WE9+(WEN-WCSN)×t	-3.5+(WEN-WCSN)×t	3.5+(WEN-WCSN)×t	ns
WE35	EIM_CSx_B Valid to EIM_OE_B Valid	WE10- WE6+(OEA-RCSA)×t	-3.5+(OEA-RCSA)×t	3.5+(OEA-RCSA)×t	ns
WE35A (muxed A/D)	EIM_CSx_B Valid to EIM_OE_B Valid	WE10-WE6+(OEA+RADVN+RADVA+ADH+1-RCSA)×t	-3.5+(OEA+RADVN+RADVA+ADH+1-RCSA)×t	3.5+(OEA+RADVN+RADVA+ADH+1-RCSA)×t	ns
WE36	EIM_OE_B Invalid to EIM_CSx_B Invalid	WE7-WE11+(OEN-RCSN)×t	-3.5+(OEN-RCSN)×t	3.5+(OEN-RCSN)×t	ns
WE37	EIM_CSx_B Valid to EIM_EBx_B Valid (Read access)	WE12-WE6+(RBEA-RCSA)× t	-3.5+(RBEA- RCSA)×t	3.5+(RBEA - RCSA)×t	ns
WE38	EIM_EBx_B Invalid to EIM_CSx_B Invalid (Read access)	WE7-WE13+(RBEN-RCSN)×t	-3.5+ (RBEN-RCSN)×t	3.5+(RBEN-RCSN)×t	ns

Table 45. EIM Asynchronous Timing Parameters Relative to Chip Select[1,2] (continued)

Ref No.	Parameter	Determination by Synchronous measured parameters	Min	Max	Unit
WE39	EIM_CSx_B Valid to EIM_LBA_B Valid	WE14-WE6+(ADVA-CSA)×t	-3.5+(ADVA-CSA)×t	3.5+(ADVA-CSA)×t	ns
WE40	EIM_LBA_B Invalid to EIM_CSx_B Invalid (ADVL is asserted)	WE7-WE15-CSN×t	-3.5-CSN×t	3.5-CSN×t	ns
WE40A (muxed A/D)	EIM_CSx_B Valid to EIM_LBA_B Invalid	WE14-WE6+(ADVN+ADVA+1-CSA)×t	-3.5+(ADVN+ADVA+1-CSA)×t	3.5+(ADVN+ADVA+1-CSA)×t	ns
WE41	EIM_CSx_B Valid to Output Data Valid	WE16-WE6-WCSA×t	-3.5-WCSA×t	3.5-WCSA×t	ns
WE41A (muxed A/D)	EIM_CSx_B Valid to Output Data Valid	WE16-WE6+(WADVN+WADVA+ADH+1-WCSA)×t	-3.5+(WADVN+WADVA+ADH+1-WCSA)×t	3.5+(WADVN+WADVA+ADH+1-WCSA)×t	ns
WE42	Output Data Invalid to EIM_CSx_B Invalid	WE17-WE7-CSN×t	-3.5-CSN×t	3.5-CSN×t	ns
MAXCO	Output maximum delay from internal driving EIM_ADDRxx/control flip-flops to chip outputs.	10	—	10	ns
MAXCSO	Output maximum delay from internal chip selects driving flip-flops to EIM_CSx_B out.	10	—	10	ns
MAXDI	EIM_DATAxx MAXIMUM delay from chip input data to its internal flip-flop	5	—	5	ns
WE43	Input Data Valid to EIM_CSx_B Invalid	MAXCO-MAXCSO+MAXDI	MAXCO-MAXCSO+MAXDI	—	ns
WE44	EIM_CSx_B Invalid to Input Data Invalid	0	0	—	ns
WE45	EIM_CSx_B Valid to EIM_EBx_B Valid (Write access)	WE12-WE6+(WBEA-WCSA)×t	-3.5+(WBEA-WCSA)×t	3.5+(WBEA-WCSA)×t	ns
WE46	EIM_EBx_B Invalid to EIM_CSx_B Invalid (Write access)	WE7-WE13+(WBEN-WCSN)×t	-3.5+(WBEN-WCSN)×t	3.5+(WBEN-WCSN)×t	ns
MAXDTI	Maximum delay from EIM_DTACK_B input to its internal flip-flop + 2 cycles for synchronization	10	—	10	ns
WE47	EIM_DTACK_B Active to EIM_CSx_B Invalid	MAXCO-MAXCSO+MAXDTI	MAXCO-MAXCSO+MAXDTI	—	ns
WE48	EIM_CSx_B Invalid to EIM_DTACK_B invalid	0	0	—	ns

1 For more information on configuration parameters mentioned in this table, see the *i.MX 6SoloX Applications Processor Reference Manual* (IMX6SXRM).

[2] In this table:
t means clock period from axi_clk frequency.
CSA means register setting for WCSA when in write operations or RCSA when in read operations.
CSN means register setting for WCSN when in write operations or RCSN when in read operations.
ADVN means register setting for WADVN when in write operations or RADVN when in read operations.
ADVA means register setting for WADVA when in write operations or RADVA when in read operations.

4.10 Multi-mode DDR Controller (MMDC)

The Multi-mode DDR Controller is a dedicated interface to DDR3/DDR3L/LPDDR2 SDRAM.

4.10.1 MMDC Compatibility with JEDEC-Compliant SDRAMs

The i.MX 6SoloX MMDC supports the following memory types:

- LPDDR2 SDRAM compliant to JESD209-2B LPDDR2 JEDEC standard release June, 2009
- DDR3 SDRAM compliant to JESD79-3D DDR3 JEDEC standard release April, 2008

MMDC operation with the standards stated above is contingent upon the board DDR design adherence to the DDR design and layout requirements stated in the Hardware Development Guide for i.MX 6SoloX Application Processors (IMX6SXHDG).

4.10.2 MMDC Supported DDR3/LPDDR2 Configurations

The table below shows the supported DDR3/LPDDR2 configurations:

Table 46. i.MX 6SoloX Supported DDR3/LPDDR2 Configurations

Parameter	Min	Max	Unit
LPDDR2			
JEDEC LPDDR2 Device Speed Grade[1]	LPDDR2-800	—	—
JEDEC LPDDR2 Device Bus Width	x16	x32	Bits
JEDEC LPDDR2 Device Count[2]	1	2	Devices
DDR3/DDR3L			
JEDEC DDR3/DDR3L Device Speed Grade[3]	DDR3-800	—	—
JEDEC DDR3/DDR3L Device Bus Width	x16	x32	Bits
JEDEC DDR3/DDR3L Device Count[4]	1	2	Devices

[1] Higher speed grade memories are supported as long as they are backward compatible with the speed grade shown.
[2] Supported configurations are one 32-bit DDR memory or two 16-bit DDR memories.
[3] Higher speed grade memories are supported as long as they are backward compatible with the speed grade shown.
[4] Supported configurations are one 32-bit DDR memory or two 16-bit DDR memories.

4.11 General-Purpose Media Interface (GPMI) Timing

The i.MX 6SoloX GPMI controller is a flexible interface NAND Flash controller with 8-bit data width, up to 200 MB/s I/O speed and individual chip select.

It supports Asynchronous timing mode, Source Synchronous timing mode and Samsung Toggle timing mode separately described in the following subsections.

4.11.1 Asynchronous Mode AC Timing (ONFI 1.0 Compatible)

Asynchronous mode AC timings are provided as multiplications of the clock cycle and fixed delay. The maximum I/O speed of GPMI in asynchronous mode is about 50 MB/s. Figure 22 through Figure 25 depicts the relative timing between GPMI signals at the module level for different operations under asynchronous mode. Table 47 describes the timing parameters (NF1–NF17) that are shown in the figures.

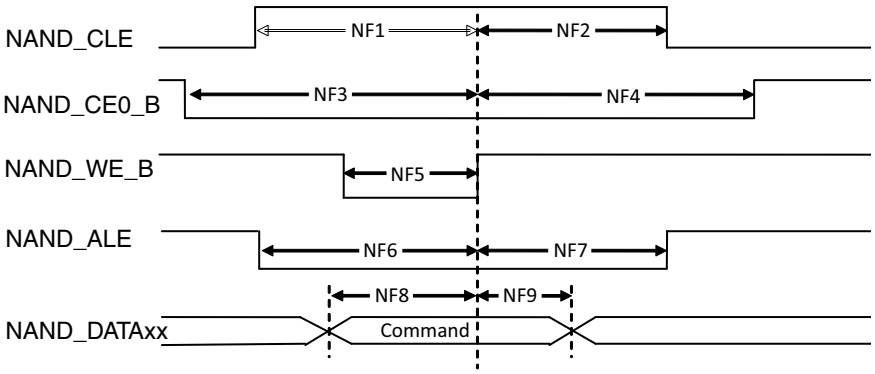

Figure 22. Command Latch Cycle Timing Diagram

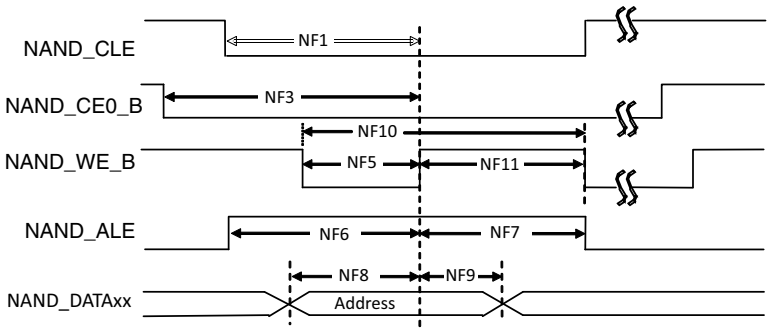

Figure 23. Address Latch Cycle Timing Diagram

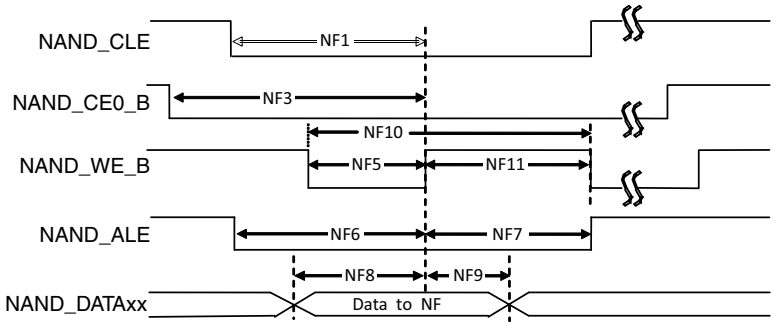

Figure 24. Write Data Latch Cycle Timing Diagram

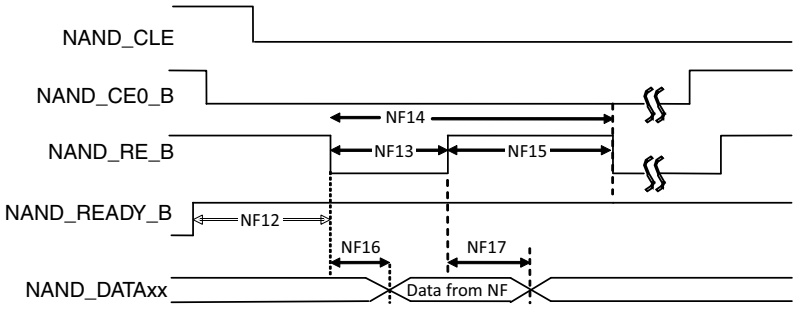

Figure 25. Read Data Latch Cycle Timing Diagram (Non-EDO Mode)

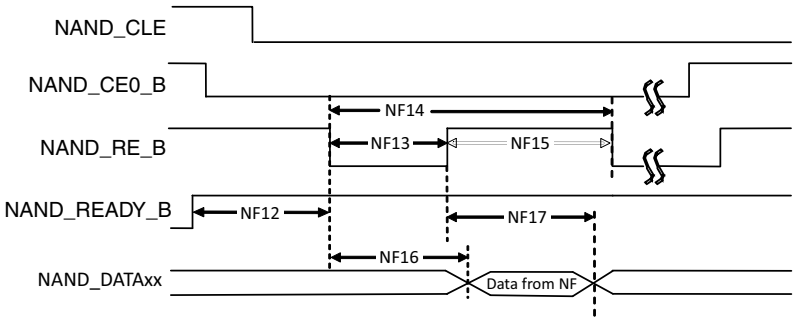

Figure 26. Read Data Latch Cycle Timing Diagram (EDO Mode)

Table 47. Asynchronous Mode Timing Parameters[1]

ID	Parameter	Symbol	Timing T = GPMI Clock Cycle		Unit
			Min	Max	
NF1	NAND_CLE setup time	tCLS	(AS + DS) × T - 0.12 [see [2,3]]		ns
NF2	NAND_CLE hold time	tCLH	DH × T - 0.72 [see [2]]		ns
NF3	NAND_CE0_B setup time	tCS	(AS + DS + 1) × T [see [3,2]]		ns
NF4	NAND_CE0_B hold time	tCH	(DH+1) × T - 1 [see [2]]		ns
NF5	NAND_WE_B pulse width	tWP	DS × T [see [2]]		ns
NF6	NAND_ALE setup time	tALS	(AS + DS) × T - 0.49 [see [3,2]]		ns
NF7	NAND_ALE hold time	tALH	(DH × T - 0.42 [see [2]]		ns

Table 47. Asynchronous Mode Timing Parameters[1] (continued)

ID	Parameter	Symbol	Timing T = GPMI Clock Cycle		Unit
			Min	Max	
NF8	Data setup time	tDS	DS × T - 0.26 [see [2]]		ns
NF9	Data hold time	tDH	DH × T - 1.37 [see [2]]		ns
NF10	Write cycle time	tWC	(DS + DH) × T [see [2]]		ns
NF11	NAND_WE_B hold time	tWH	DH × T [see [2]]		ns
NF12	Ready to NAND_RE_B low	tRR[4]	(AS + 2) × T [see [3,2]]	—	ns
NF13	NAND_RE_B pulse width	tRP	DS × T [see [2]]		ns
NF14	READ cycle time	tRC	(DS + DH) × T [see [2]]		ns
NF15	NAND_RE_B high hold time	tREH	DH × T [see [2]]		ns
NF16	Data setup on read	tDSR	—	(DS × T -0.67)/18.38 [see [5,6]]	ns
NF17	Data hold on read	tDHR	0.82/11.83 [see [5,6]]	—	ns

1 GPMI's Async Mode output timing can be controlled by the module's internal registers HW_GPMI_TIMING0_ADDRESS_SETUP, HW_GPMI_TIMING0_DATA_SETUP, and HW_GPMI_TIMING0_DATA_HOLD. This AC timing depends on these registers settings. In the table, AS/DS/DH represents each of these settings.

2 AS minimum value can be 0, while DS/DH minimum value is 1.

3 T = GPMI clock period -0.075ns (half of maximum p-p jitter).

4 NF12 is guaranteed by the design.

5 Non-EDO mode.

6 EDO mode, GPMI clock ≈ 100 MHz (AS=DS=DH=1, GPMI_CTL1 [RDN_DELAY] = 8, GPMI_CTL1 [HALF_PERIOD] = 0).

In EDO mode (Figure 25), NF16/NF17 are different from the definition in non-EDO mode (Figure 24). They are called tREA/tRHOH (RE# access time/RE# HIGH to output hold). The typical value for them are 16 ns (max for tREA)/15 ns (min for tRHOH) at 50 MB/s EDO mode. In EDO mode, GPMI will sample NAND_DATAxx at rising edge of delayed NAND_RE_B provided by an internal DPLL. The delay value can be controlled by GPMI_CTRL1.RDN_DELAY (see the GPMI chapter of the *i.MX 6SoloX Applications Processor Reference Manual* (IMX6SXRM)). The typical value of this control register is 0x8 at 50 MT/s EDO mode. But if the board delay is big enough and cannot be ignored, the delay value should be made larger to compensate the board delay.

4.11.2 Source Synchronous Mode AC Timing (ONFI 2.x Compatible)

Figure 27 to Figure 29 show the write and read timing of Source Synchronous Mode.

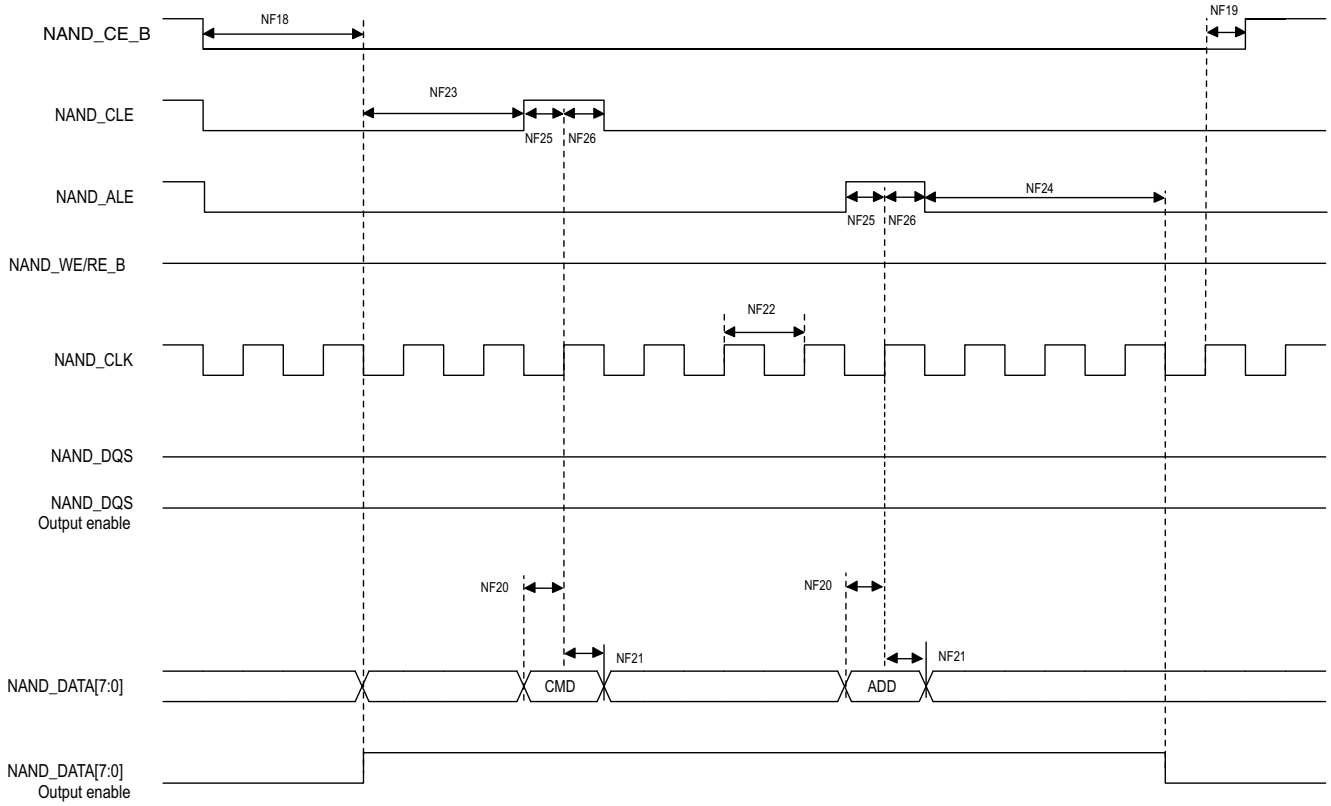

Figure 27. Source Synchronous Mode Command and Address Timing Diagram

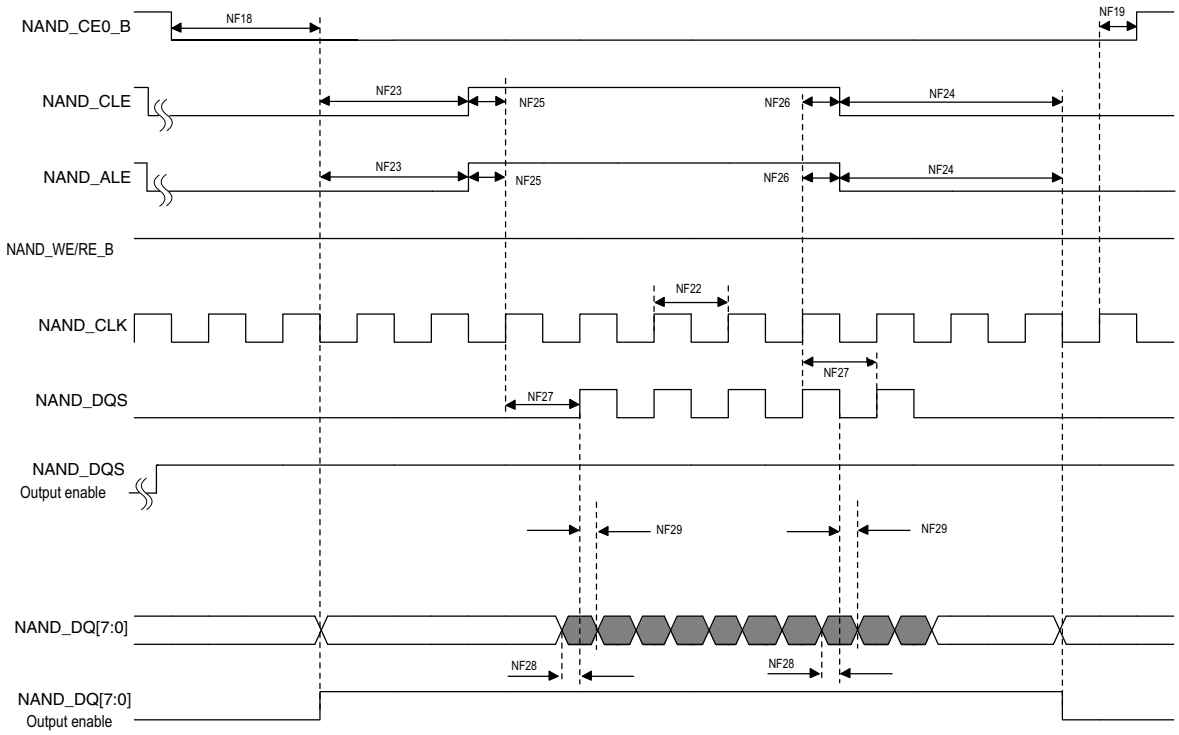

Figure 28. Source Synchronous Mode Data Write Timing Diagram

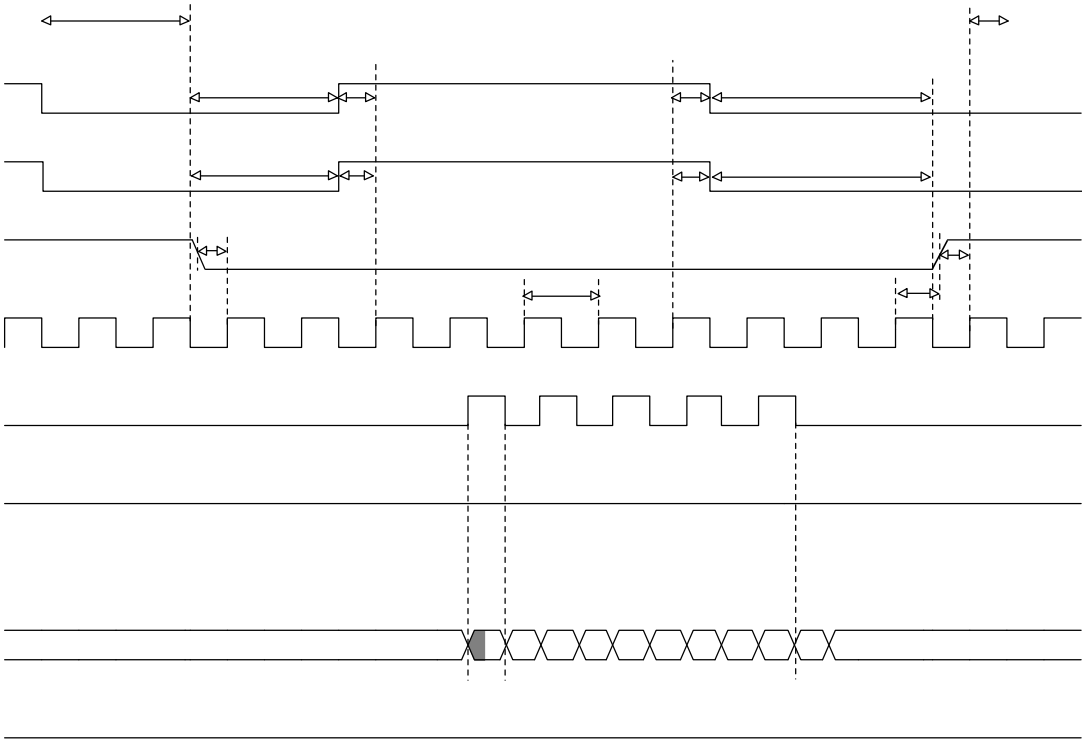

Figure 29. Source Synchronous Mode Data Read Timing Diagram

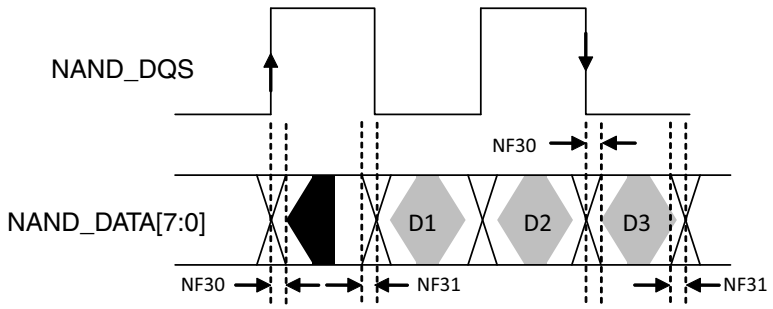

Figure 30. NAND_DQS/NAND_DQ Read Valid Window

Table 48. Source Synchronous Mode Timing Parameters[1]

ID	Parameter	Symbol	Timing T = GPMI Clock Cycle		Unit
			Min	Max	
NF18	NAND_CE0_B access time	tCE	CE_DELAY × T - 0.79 [see [2]]		ns
NF19	NAND_CE0_B hold time	tCH	0.5 × tCK - 0.63 [see [2]]		ns
NF20	Command/address NAND_DATAxx setup time	tCAS	0.5 × tCK - 0.05		ns
NF21	Command/address NAND_DATAxx hold time	tCAH	0.5 × tCK - 1.23		ns
NF22	clock period	tCK	—		ns
NF23	preamble delay	tPRE	PRE_DELAY × T - 0.29 [see [2]]		ns
NF24	postamble delay	tPOST	POST_DELAY × T - 0.78 [see [2]]		ns
NF25	NAND_CLE and NAND_ALE setup time	tCALS	0.5 × tCK - 0.86		ns
NF26	NAND_CLE and NAND_ALE hold time	tCALH	0.5 × tCK - 0.37		ns
NF27	NAND_CLK to first NAND_DQS latching transition	tDQSS	T - 0.41 [see [2]]		ns
NF28	Data write setup	—	0.25 × tCK - 0.35		—
NF29	Data write hold	—	0.25 × tCK - 0.85		—
NF30	NAND_DQS/NAND_DQ read setup skew	—	—	2.06	—
NF31	NAND_DQS/NAND_DQ read hold skew	—	—	1.95	—

[1] GPMI's source synchronous mode output timing can be controlled by the module's internal registers GPMI_TIMING2_CE_DELAY, GPMI_TIMING_PREAMBLE_DELAY, GPMI_TIMING2_POST_DELAY. This AC timing depends on these registers settings. In the table, CE_DELAY/PRE_DELAY/POST_DELAY represents each of these settings.

[2] T = tCK(GPMI clock period) -0.075ns (half of maximum p-p jitter).

For DDR Source sync mode, Figure 30 shows the timing diagram of NAND_DQS/NAND_DATAxx read valid window. The typical value of tDQSQ is 0.85ns (max) and 1ns (max) for tQHS at 200MB/s. GPMI will sample NAND_DATA[7:0] at both rising and falling edge of an delayed NAND_DQS signal, which can be provided by an internal DPLL. The delay value can be controlled by GPMI register GPMI_READ_DDR_DLL_CTRL.SLV_DLY_TARGET (see the GPMI chapter of the *i.MX 6SoloX Applications Processor Reference Manual* (IMX6SXRM)). Generally, the typical delay value of this register is equal to 0x7 which means 1/4 clock cycle delay expected. But if the board delay is big enough and cannot be ignored, the delay value should be made larger to compensate the board delay.

4.11.3 Samsung Toggle Mode AC Timing

4.11.3.1 Command and Address Timing

NOTE

Samsung Toggle Mode command and address timing is the same as ONFI 1.0 compatible Async mode AC timing. See Section 4.11.1, "Asynchronous Mode AC Timing (ONFI 1.0 Compatible)," for details.

4.11.3.2 Read and Write Timing

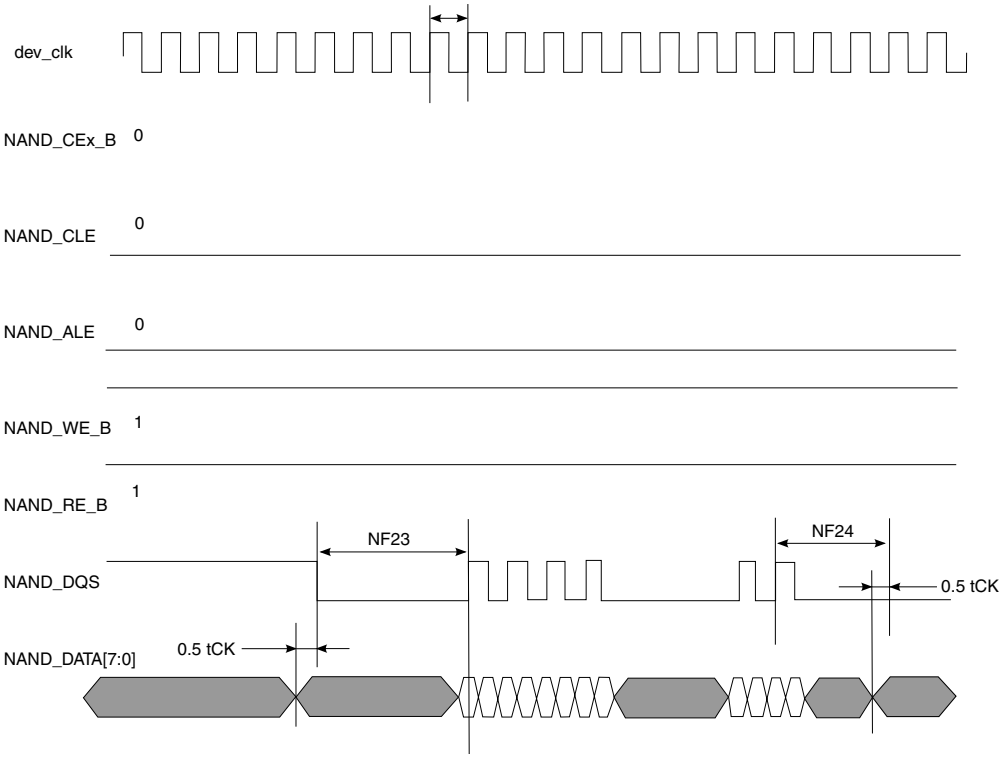

Figure 31. Samsung Toggle Mode Data Write Timing

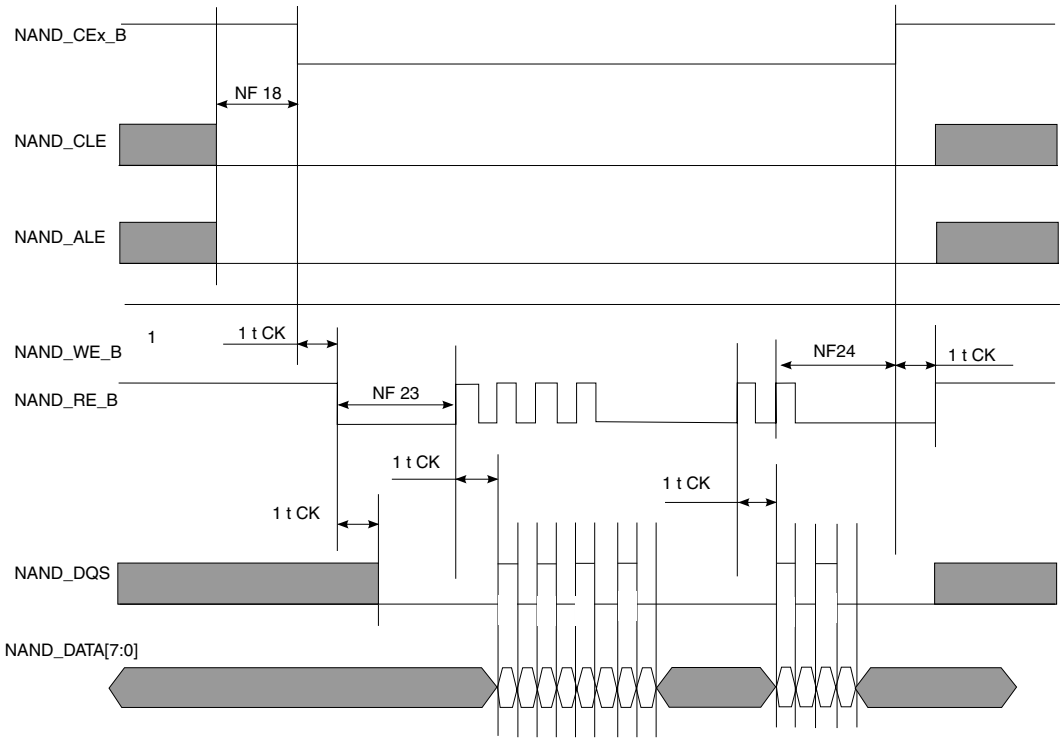

Figure 32. Samsung Toggle Mode Data Read Timing

Table 49. Samsung Toggle Mode Timing Parameters[1]

ID	Parameter	Symbol	Timing T = GPMI Clock Cycle		Unit
			Min	Max	
NF1	NAND_CLE setup time	tCLS	(AS + DS) × T - 0.12 [see [2,3]]		—
NF2	NAND_CLE hold time	tCLH	DH × T - 0.72 [see [2]]		—
NF3	NAND_CE0_B setup time	tCS	(AS + DS) × T - 0.58 [see [3,2]]		—
NF4	NAND_CE0_B hold time	tCH	DH × T - 1 [see [2]]		—
NF5	NAND_WE_B pulse width	tWP	DS × T [see [2]]		—
NF6	NAND_ALE setup time	tALS	(AS + DS) × T - 0.49 [see [3,2]]		—
NF7	NAND_ALE hold time	tALH	DH × T - 0.42 [see [2]]		—
NF8	Command/address NAND_DATAxx setup time	tCAS	DS × T - 0.26 [see [2]]		—
NF9	Command/address NAND_DATAxx hold time	tCAH	DH × T - 1.37 [see [2]]		—
NF18	NAND_CEx_B access time	tCE	CE_DELAY × T [see [4,2]]	—	ns
NF22	clock period	tCK	—	—	ns
NF23	preamble delay	tPRE	PRE_DELAY × T [see [5,2]]	—	ns
NF24	postamble delay	tPOST	POST_DELAY × T +0.43 [see [2]]	—	ns

Table 49. Samsung Toggle Mode Timing Parameters[1] (continued)

ID	Parameter	Symbol	Timing T = GPMI Clock Cycle		Unit
			Min	Max	
NF28	Data write setup	tDS[6]	0.25 × tCK - 0.32	—	ns
NF29	Data write hold	tDH[6]	0.25 × tCK - 0.79	—	ns
NF30	NAND_DQS/NAND_DQ read setup skew	tDQSQ[7]	—	3.18	—
NF31	NAND_DQS/NAND_DQ read hold skew	tQHS[7]	—	3.27	—

1 The GPMI toggle mode output timing can be controlled by the module's internal registers HW_GPMI_TIMING0_ADDRESS_SETUP, HW_GPMI_TIMING0_DATA_SETUP, and HW_GPMI_TIMING0_DATA_HOLD. This AC timing depends on these registers settings. In the table, AS/DS/DH represents each of these settings.

2 AS minimum value can be 0, while DS/DH minimum value is 1.

3 T = tCK (GPMI clock period) -0.075ns (half of maximum p-p jitter).

4 CE_DELAY represents HW_GPMI_TIMING2[CE_DELAY]. NF18 is guaranteed by the design. Read/Write operation is started with enough time of ALE/CLE assertion to low level.

5 PRE_DELAY+1) ≥ (AS+DS)

6 Shown in Figure 31.

7 Shown in Figure 32.

For DDR Toggle mode, Figure 30 shows the timing diagram of NAND_DQS/NAND_DATAxx read valid window. The typical value of tDQSQ is 1.4 ns (max) and 1.4 ns (max) for tQHS at 133 MB/s. GPMI will sample NAND_DATA[7:0] at both rising and falling edge of an delayed NAND_DQS signal, which is provided by an internal DPLL. The delay value of this register can be controlled by GPMI register GPMI_READ_DDR_DLL_CTRL.SLV_DLY_TARGET (see the GPMI chapter of the *i.MX 6SoloX Applications Processor Reference Manual* (IMX6SXRM)). Generally, the typical delay value is equal to 0x7 which means 1/4 clock cycle delay expected. But if the board delay is big enough and cannot be ignored, the delay value should be made larger to compensate the board delay.

4.12 External Peripheral Interface Parameters

The following subsections provide information on external peripheral interfaces.

4.12.1 AUDMUX Timing Parameters

The AUDMUX provides a programmable interconnect logic for voice, audio, and data routing between internal serial interfaces (SSIs) and external serial interfaces (audio and voice codecs). The AC timing of AUDMUX external pins is governed by the SSI module. For more information, see the respective SSI electrical specifications found within this document.

4.12.2 CMOS Sensor Interface (CSI) Timing Parameters

The CSI enables the chip to connect directly to external CMOS image sensors, which are classified as dumb or smart as follows:

- Dumb sensors only support traditional sensor timing (vertical sync (VSYNC) and horizontal sync (HSYNC)) and output-only Bayer and statistics data.

- Smart sensors support CCIR656 video decoder formats and perform additional processing of the image (for example, image compression, image pre-filtering, and various data output formats).

The following subsections describe the CSI timing in gated and ungated clock modes.

4.12.2.1 Gated Clock Mode Timing

Figure 33 and Figure 34 shows the gated clock mode timings for CSI, and Table 50 describes the timing parameters (P1–P7) shown in the figures. A frame starts with a rising/falling edge on CSI_VSYNC (VSYNC), then CSI_HSYNC (HSYNC) is asserted and holds for the entire line. The pixel clock, CSI_PIXCLK (PIXCLK), is valid as long as HSYNC is asserted.

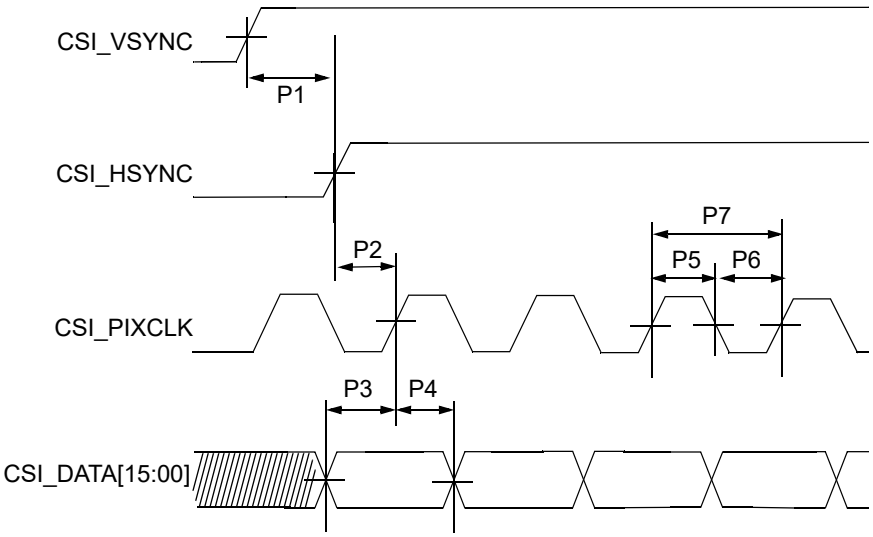

Figure 33. CSI Gated Clock Mode—Sensor Data at Falling Edge, Latch Data at Rising Edge

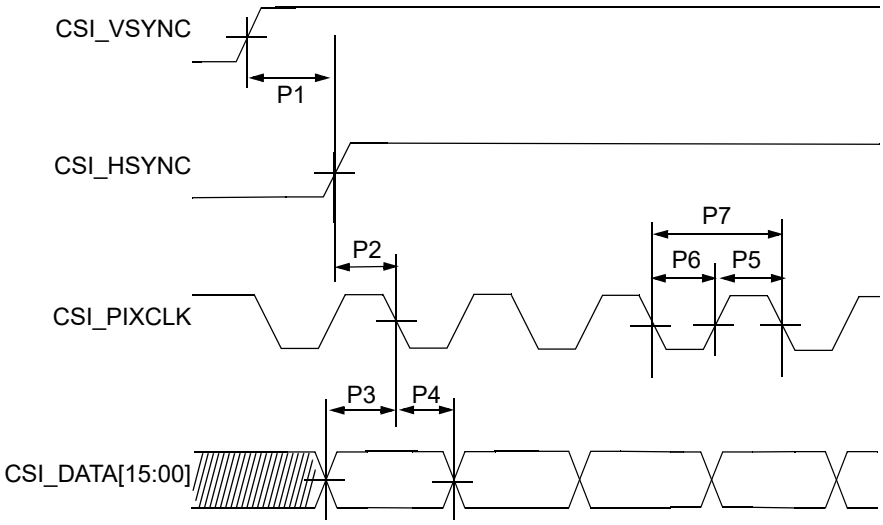

Figure 34. CSI Gated Clock Mode—Sensor Data at Rising Edge, Latch Data at Falling Edge

Table 50. CSI Gated Clock Mode Timing Parameters

ID	Parameter	Symbol	Min	Max	Units
P1	CSI_VSYNC to CSI_HSYNC time	tV2H	33.5	—	ns
P2	CSI_HSYNC setup time	tHsu	1	—	ns
P3	CSI DATA setup time	tDsu	1	—	ns
P4	CSI DATA hold time	tDh	1	—	ns
P5	CSI pixel clock high time	tCLKh	3.75	—	ns
P6	CSI pixel clock low time	tCLKl	3.75	—	ns
P7	CSI pixel clock frequency	fCLK	—	133	MHz

4.12.2.2 Ungated Clock Mode Timing

Figure 35 shows the ungated clock mode timings of CSI, and Table 51 describes the timing parameters (P1–P6) that are shown in the figure. In ungated mode the CSI_VSYNC and CSI_PIXCLK signals are used, and the CSI_HSYNC signal is ignored.

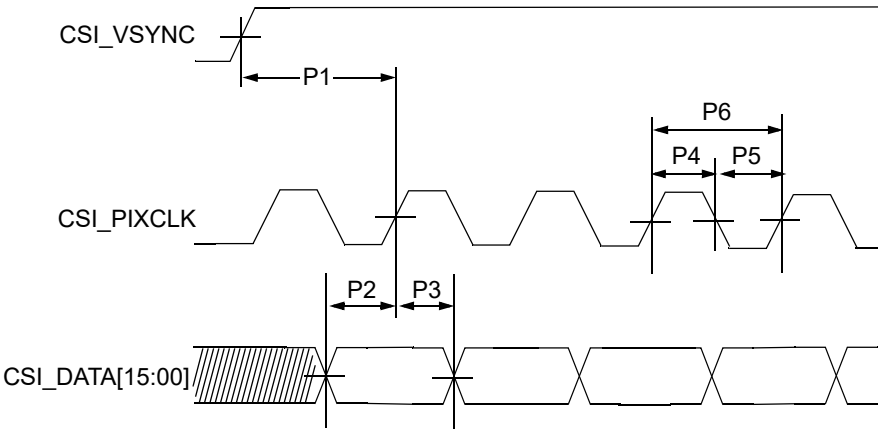

Figure 35. CSI Ungated Clock Mode—Sensor Data at Falling Edge, Latch Data at Rising Edge

Table 51. CSI Ungated Clock Mode Timing Parameters

ID	Parameter	Symbol	Min	Max	Units
P1	CSI_VSYNC to pixel clock time	tVSYNC	33.5	—	ns
P2	CSI DATA setup time	tDsu	1	—	ns
P3	CSI DATA hold time	tDh	1	—	ns
P4	CSI pixel clock high time	tCLKh	3.75	—	ns
P5	CSI pixel clock low time	tCLKl	3.75	—	ns
P6	CSI pixel clock frequency	fCLK	—	133	MHz

4.12.3 ECSPI Timing Parameters

This section describes the timing parameters of the ECSPI blocks. The ECSPI have separate timing parameters for master and slave modes.

4.12.3.1 ECSPI Master Mode Timing

Figure 36 depicts the timing of ECSPI in master mode. Table 52 lists the ECSPI master mode timing characteristics.

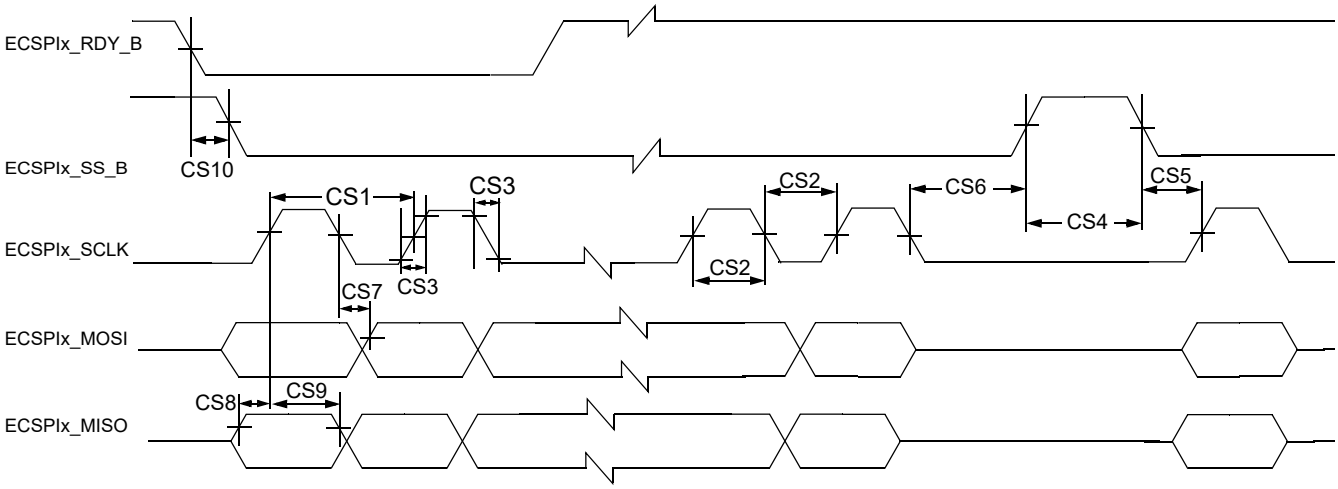

Figure 36. ECSPI Master Mode Timing Diagram

NOTE

ECSPIx_MOSI is always driven (not tri-stated) between actual data transmissions. This limits the ECSPI to be connected between a single master and a single slave.

Table 52. ECSPI Master Mode Timing Parameters

ID	Parameter	Symbol	Min	Max	Unit
CS1	ECSPIx_SCLK Cycle Time–Read ECSPIx_SCLK Cycle Time–Write	t_{clk}	43 15	—	ns
CS2	ECSPIx_SCLK High or Low Time–Read ECSPIx_SCLK High or Low Time–Write	t_{SW}	21.5 7	—	ns
CS3	ECSPIx_SCLK Rise or Fall[1]	$t_{RISE/FALL}$	—	—	ns
CS4	ECSPIx_SS_B pulse width	t_{CSLH}	Half ECSPIx_SCLK period	—	ns
CS5	ECSPIx_SS_B Lead Time (CS setup time)	t_{SCS}	Half ECSPIx_SCLK period - 4	—	ns
CS6	ECSPIx_SS_B Lag Time (CS hold time)	t_{HCS}	Half ECSPIx_SCLK period - 2	—	ns
CS7	ECSPIx_MOSI Propagation Delay (C_{LOAD} = 20 pF)	t_{PDmosi}	-1	1	ns
CS8	ECSPIx_MISO Setup Time	t_{Smiso}	14	—	ns

Table 52. ECSPI Master Mode Timing Parameters (continued)

ID	Parameter	Symbol	Min	Max	Unit
CS9	ECSPIx_MISO Hold Time	t_{Hmiso}	0	—	ns
CS10	RDY to ECSPIx_SS_B Time[2]	t_{SDRY}	5	—	ns

[1] See specific I/O AC parameters Section 4.7, "I/O AC Parameters."

[2] SPI_RDY is sampled internally by ipg_clk and is asynchronous to all other CSPI signals.

4.12.3.2 ECSPI Slave Mode Timing

Figure 37 depicts the timing of ECSPI in slave mode. Table 53 lists the ECSPI slave mode timing characteristics.

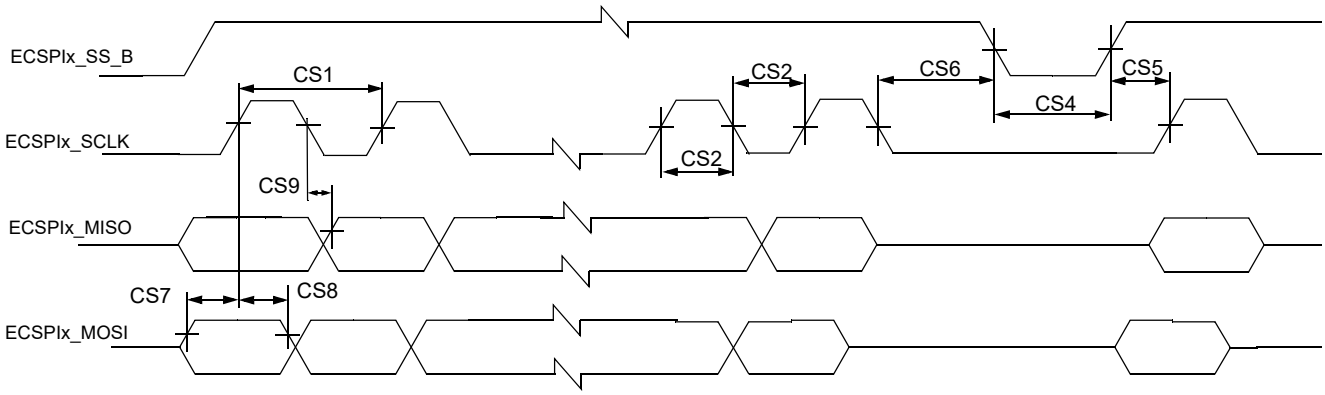

Figure 37. ECSPI Slave Mode Timing Diagram

NOTE

ECSPIx_MISO is always driven (not tri-stated) between actual data transmissions. This limits the ECSPI to be connected between a single master and a single slave.

Table 53. ECSPI Slave Mode Timing Parameters

ID	Parameter	Symbol	Min	Max	Unit
CS1	ECSPIx_SCLK Cycle Time–Read ECSPI_SCLK Cycle Time–Write	t_{clk}	15 43	—	ns
CS2	ECSPIx_SCLK High or Low Time–Read ECSPIx_SCLK High or Low Time–Write	t_{SW}	7 21.5	—	ns
CS4	ECSPIx_SS_B pulse width	t_{CSLH}	Half ECSPIx_SCLK period	—	ns
CS5	ECSPIx_SS_B Lead Time (CS setup time)	t_{SCS}	5	—	ns
CS6	ECSPIx_SS_B Lag Time (CS hold time)	t_{HCS}	5	—	ns
CS7	ECSPIx_MOSI Setup Time	t_{Smosi}	4	—	ns
CS8	ECSPIx_MOSI Hold Time	t_{Hmosi}	4	—	ns
CS9	ECSPIx_MISO Propagation Delay (C_{LOAD} = 20 pF)	t_{PDmiso}	4	19	ns

4.12.4 Enhanced Serial Audio Interface (ESAI) Timing Parameters

The ESAI consists of independent transmitter and receiver sections, each section with its own clock generator. Table 54 shows the interface timing values. The number field in the table refers to timing signals found in Figure 38 and Figure 39.

Table 54. Enhanced Serial Audio Interface (ESAI) Timing

No.	Characteristics[1,2]	Symbol	Expression[2]	Min	Max	Condition[3]	Unit
62	Clock cycle[4]	t_{SSICC}	$4 \times T_C$ $4 \times T_C$	30.0 30.0	— —	i ck i ck	ns
63	Clock high period: • For internal clock • For external clock	 — —	 $2 \times T_C - 9.0$ $2 \times T_C$	 6 15	 — —	 — —	ns
64	Clock low period: • For internal clock • For external clock	 — —	 $2 \times T_C - 9.0$ $2 \times T_C$	 6 15	 — —	 — —	ns
65	ESAI_RX_CLK rising edge to ESAI_RX_FS out (bl) high	— —	— —	— —	17.0 7.0	x ck i ck a	ns
66	ESAI_RX_CLK rising edge to ESAI_RX_FS out (bl) low	— —	— —	— —	17.0 7.0	x ck i ck a	ns
67	ESAI_RX_CLK rising edge to ESAI_RX_FS out (wr) high[5]	— —	— —	— —	19.0 9.0	x ck i ck a	ns
68	ESAI_RX_CLK rising edge to ESAI_RX_FS out (wr) low[5]	— —	— —	— —	19.0 9.0	x ck i ck a	ns
69	ESAI_RX_CLK rising edge to ESAI_RX_FS out (wl) high	— —	— —	— —	16.0 6.0	x ck i ck a	ns
70	ESAI_RX_CLK rising edge to ESAI_RX_FS out (wl) low	— —	— —	— —	17.0 7.0	x ck i ck a	ns
71	Data in setup time before ESAI_RX_CLK (SCK in synchronous mode) falling edge	— —	— —	12.0 19.0	— —	x ck i ck	ns
72	Data in hold time after ESAI_RX_CLK falling edge	— —	— —	3.5 9.0	— —	x ck i ck	ns
73	ESAI_RX_FS input (bl, wr) high before ESAI_RX_CLK falling edge[5]	— —	— —	2.0 12.0	— —	x ck i ck a	ns
74	ESAI_RX_FS input (wl) high before ESAI_RX_CLK falling edge	— —	— —	2.0 12.0	— —	x ck i ck a	ns
75	ESAI_RX_FS input hold time after ESAI_RX_CLK falling edge	— —	— —	2.5 8.5	— —	x ck i ck a	ns
78	ESAI_TX_CLK rising edge to ESAI_TX_FS out (bl) high	— —	— —	— —	18.0 8.0	x ck i ck	ns
79	ESAI_TX_CLK rising edge to ESAI_TX_FS out (bl) low	— —	— —	— —	20.0 10.0	x ck i ck	ns
80	ESAI_TX_CLK rising edge to ESAI_TX_FS out (wr) high[5]	— —	— —	— —	20.0 10.0	x ck i ck	ns

Table 54. Enhanced Serial Audio Interface (ESAI) Timing (continued)

No.	Characteristics[1,2]	Symbol	Expression[2]	Min	Max	Condition[3]	Unit
81	ESAI_TX_CLK rising edge to ESAI_TX_FS out (wr) low[5]	— —	— —	— —	22.0 12.0	x ck i ck	ns
82	ESAI_TX_CLK rising edge to ESAI_TX_FS out (wl) high	— —	— —	— —	19.0 9.0	x ck i ck	ns
83	ESAI_TX_CLK rising edge to ESAI_TX_FS out (wl) low	— —	— —	— —	20.0 10.0	x ck i ck	ns
84	ESAI_TX_CLK rising edge to data out enable from high impedance	— —	— —	— —	22.0 17.0	x ck i ck	ns
86	ESAI_TX_CLK rising edge to data out valid	— —	— —	— —	18.0 13.0	x ck i ck	ns
87	ESAI_TX_CLK rising edge to data out high impedance [6,7]	— —	— —	— —	21.0 16.0	x ck i ck	ns
89	ESAI_TX_FS input (bl, wr) setup time before ESAI_TX_CLK falling edge[5]	— —	— —	2.0 18.0	— —	x ck i ck	ns
90	ESAI_TX_FS input (wl) setup time before ESAI_TX_CLK falling edge	— —	— —	2.0 18.0	— —	x ck i ck	ns
91	ESAI_TX_FS input hold time after ESAI_TX_CLK falling edge	— —	— —	4.0 5.0	— —	x ck i ck	ns
95	ESAI_RX_HF_CLK/ESAI_TX_HF_CLK clock cycle	—	2 x T_C	15	—	—	ns
96	ESAI_TX_HF_CLK input rising edge to ESAI_TX_CLK output	—	—	—	18.0	—	ns
97	ESAI_RX_HF_CLK input rising edge to ESAI_RX_CLK output	—	—	—	18.0	—	ns

1 i ck = internal clock
x ck = external clock
i ck a = internal clock, asynchronous mode
(asynchronous implies that ESAI_TX_CLK and ESAI_RX_CLK are two different clocks)
i ck s = internal clock, synchronous mode
(synchronous implies that ESAI_TX_CLK and ESAI_RX_CLK are the same clock)

2 bl = bit length
wl = word length
wr = word length relative

3 ESAI_TX_CLK(SCKT pin) = transmit clock
ESAI_RX_CLK(SCKR pin) = receive clock
ESAI_TX_FS(FST pin) = transmit frame sync
ESAI_RX_FS(FSR pin) = receive frame sync
ESAI_TX_HF_CLK(HCKT pin) = transmit high frequency clock
ESAI_RX_HF_CLK(HCKR pin) = receive high frequency clock

4 For the internal clock, the external clock cycle is defined by Icyc and the ESAI control register.

5 The word-relative frame sync signal waveform relative to the clock operates in the same manner as the bit-length frame sync signal waveform, but it spreads from one serial clock before the first bit clock (like the bit length frame sync signal), until the second-to-last bit clock of the first word in the frame.

6 Periodically sampled and not 100% tested.

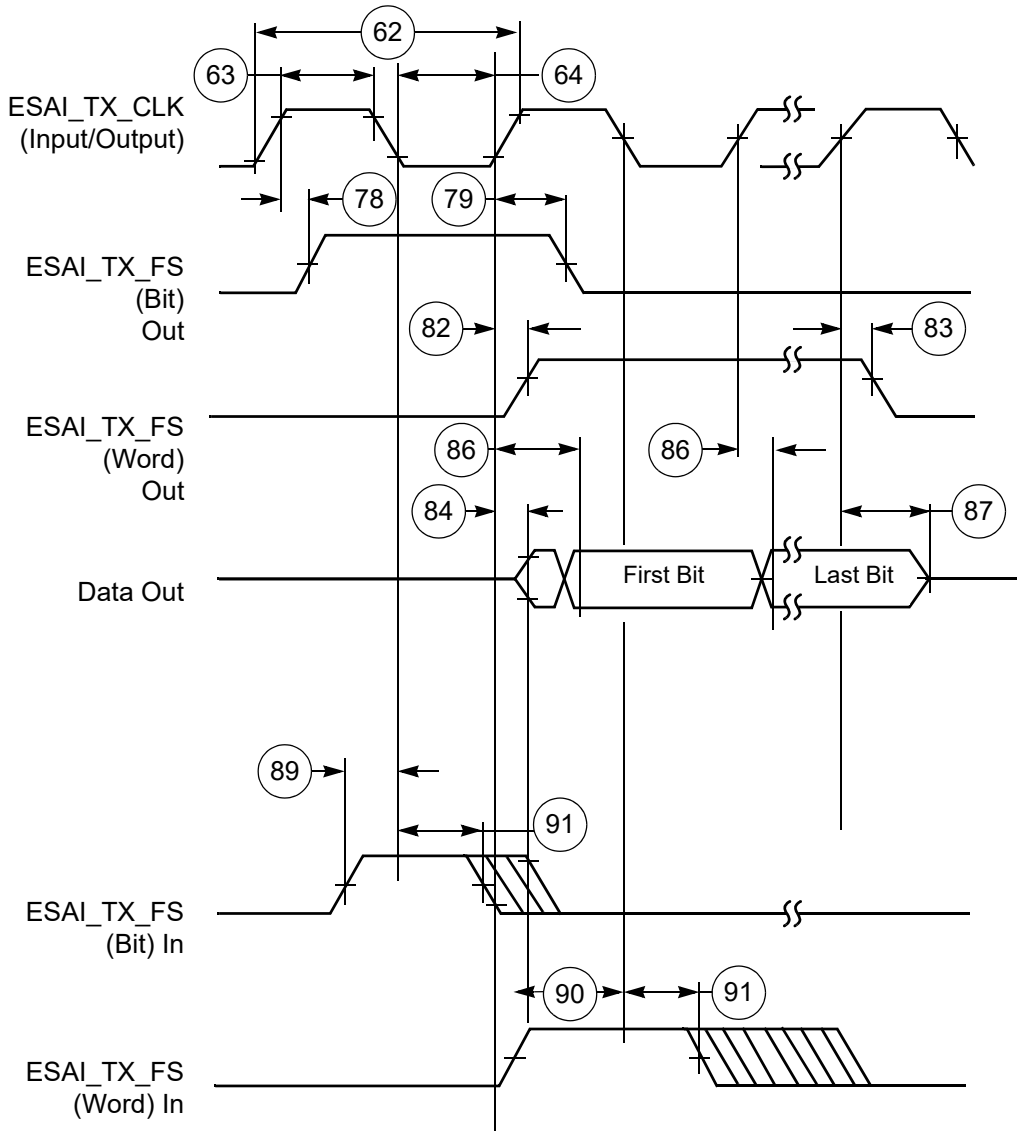

Figure 38. ESAI Transmitter Timing

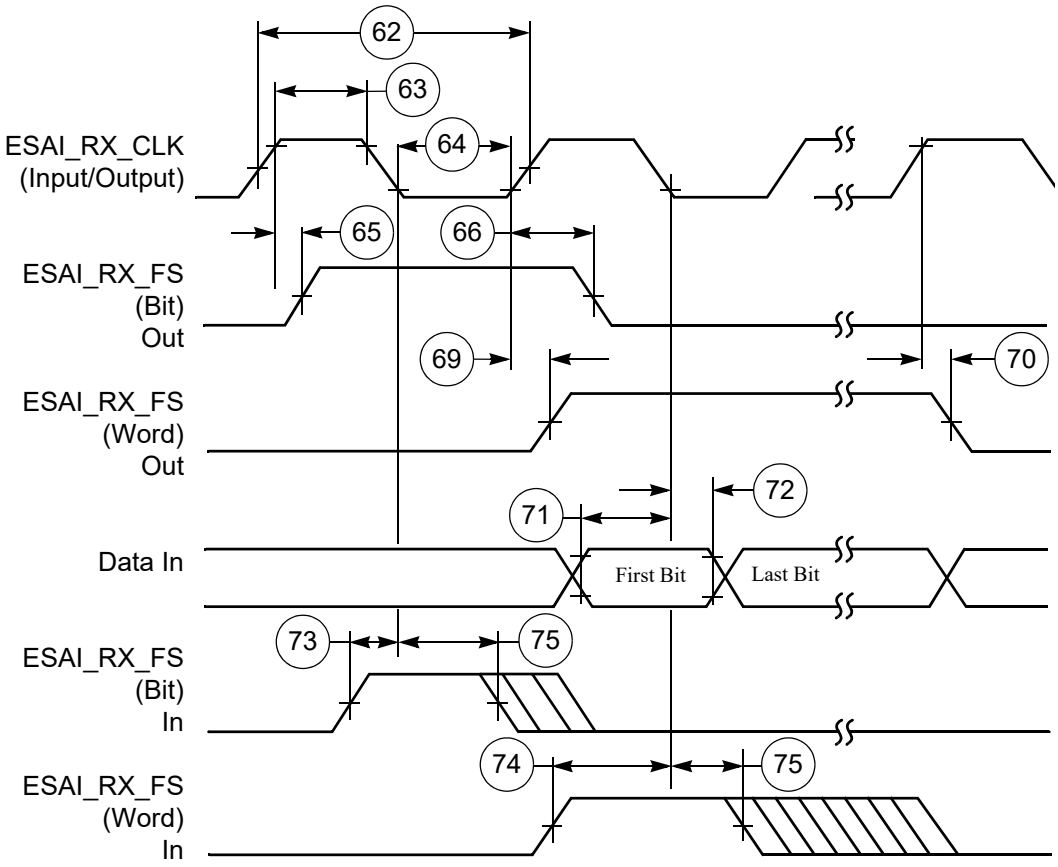

Figure 39. ESAI Receiver Timing

4.12.5 Ultra High Speed SD/SDIO/MMC Host Interface (uSDHC) AC Timing

This section describes the electrical information of the uSDHC, which includes SD/eMMC4.3 (Single Data Rate) timing, eMMC4.4/4.41 (Dual Date Rate) timing and SDR104/50(SD3.0) timing.

4.12.5.1 SD/eMMC4.3 (Single Data Rate) AC Timing

Figure 40 depicts the timing of SD/eMMC4.3, and Table 55 lists the SD/eMMC4.3 timing characteristics.

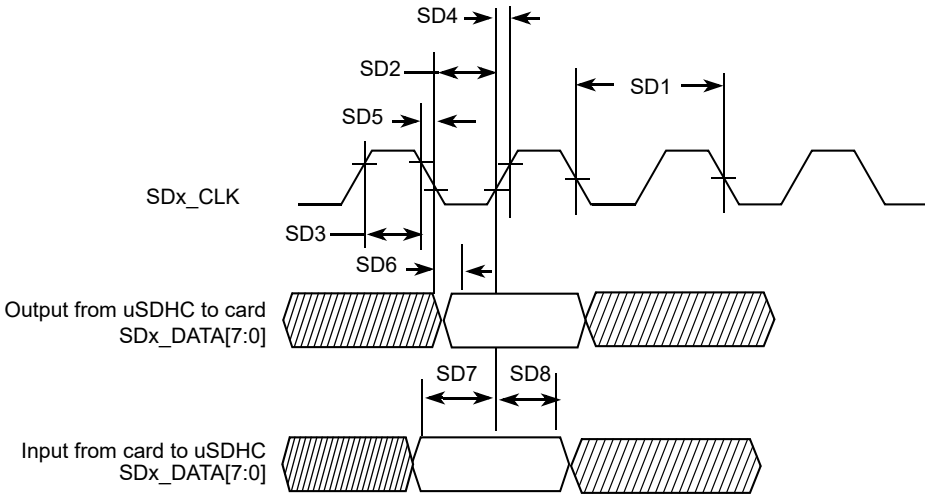

Figure 40. SD/eMMC4.3 Timing

Table 55. SD/eMMC4.3 Interface Timing Specification

ID	Parameter	Symbols	Min	Max	Unit
Card Input Clock					
SD1	Clock Frequency (Low Speed)	f_{PP}[1]	0	400	kHz
	Clock Frequency (SD/SDIO Full Speed/High Speed)	f_{PP}[2]	0	25/50	MHz
	Clock Frequency (MMC Full Speed/High Speed)	f_{PP}[3]	0	20/52	MHz
	Clock Frequency (Identification Mode)	f_{OD}	100	400	kHz
SD2	Clock Low Time	t_{WL}	7	—	ns
SD3	Clock High Time	t_{WH}	7	—	ns
SD4	Clock Rise Time	t_{TLH}	—	3	ns
SD5	Clock Fall Time	t_{THL}	—	3	ns
uSDHC Output/Card Inputs SD_CMD, SDx_DATAx (Reference to CLK)					
SD6	uSDHC Output Delay	t_{OD}	-6.6	3.6	ns

Table 55. SD/eMMC4.3 Interface Timing Specification (continued)

ID	Parameter	Symbols	Min	Max	Unit
uSDHC Input/Card Outputs SD_CMD, SDx_DATAx (Reference to CLK)					
SD7	uSDHC Input Setup Time	t_{ISU}	2.5	—	ns
SD8	uSDHC Input Hold Time[4]	t_{IH}	1.5	—	ns

1 In low speed mode, card clock must be lower than 400 kHz, voltage ranges from 2.7 to 3.6 V.

2 In normal (full) speed mode for SD/SDIO card, clock frequency can be any value between 0—25 MHz. In high-speed mode, clock frequency can be any value between 0—50 MHz.

3 In normal (full) speed mode for MMC card, clock frequency can be any value between 0—20 MHz. In high-speed mode, clock frequency can be any value between 0—52 MHz.

4 To satisfy hold timing, the delay difference between clock input and cmd/data input must not exceed 2 ns.

4.12.5.2 eMMC4.4/4.41 (Dual Data Rate) AC Timing

Figure 41 depicts the timing of eMMC4.4/4.41. Table 56 lists the eMMC4.4/4.41 timing characteristics. Be aware that only DATA is sampled on both edges of the clock (not applicable to CMD).

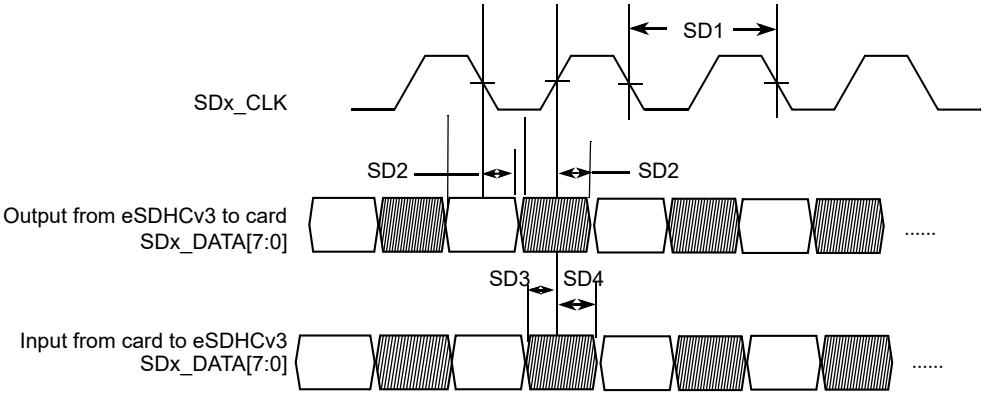

Figure 41. eMMC4.4/4.41 Timing

Table 56. eMMC4.4/4.41 Interface Timing Specification

ID	Parameter	Symbols	Min	Max	Unit
Card Input Clock					
SD1	Clock Frequency (eMMC4.4/4.41 DDR)	f_{PP}	0	52	MHz
SD1	Clock Frequency (SD3.0 DDR)	f_{PP}	0	50	MHz
uSDHC Output / Card Inputs SD_CMD, SDx_DATAx (Reference to CLK)					
SD2	uSDHC Output Delay	t_{OD}	2.8	6.8	ns
uSDHC Input / Card Outputs SD_CMD, SDx_DATAx (Reference to CLK)					
SD3	uSDHC Input Setup Time	t_{ISU}	1.7	—	ns
SD4	uSDHC Input Hold Time	t_{IH}	1.5	—	ns

4.12.5.3 SDR50/SDR104 AC Timing

Figure 42 depicts the timing of SDR50/SDR104, and Table 57 lists the SDR50/SDR104 timing characteristics.

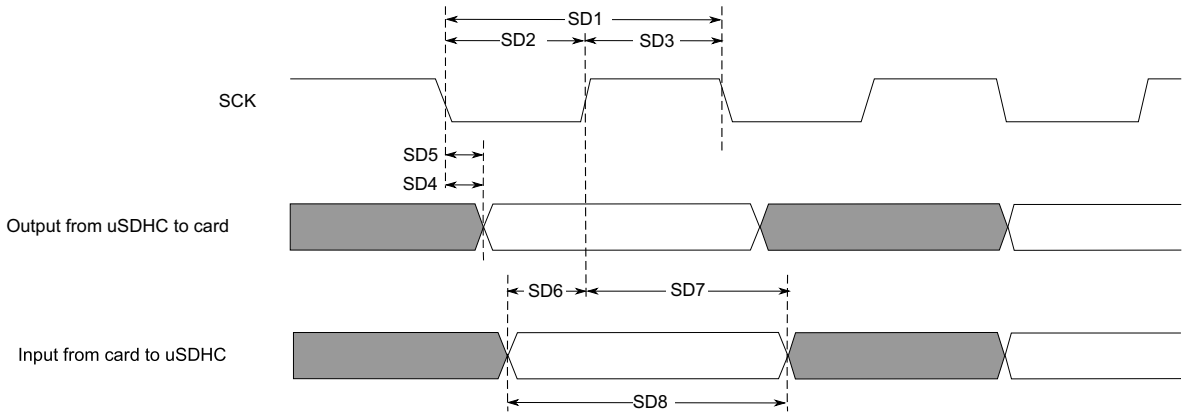

Figure 42. SDR50/SDR104 Timing

Table 57. SDR50/SDR104 Interface Timing Specification

ID	Parameter	Symbols	Min	Max	Unit
Card Input Clock					
SD1	Clock Frequency Period	t_{CLK}	4.8	—	ns
SD2	Clock Low Time	t_{CL}	$0.46 \times t_{CLK}$	$0.54 \times$ tCLK	ns
SD3	Clock High Time	t_{CH}	$0.46 \times t_{CLK}$	$0.54 \times$ tCLK	ns
uSDHC Output/Card Inputs SD_CMD, SDx_DATAx in SDR50 (Reference to CLK)					
SD4	uSDHC Output Delay	t_{OD}	–3	1	ns
uSDHC Output/Card Inputs SD_CMD, SDx_DATAx in SDR104 (Reference to CLK)					
SD5	uSDHC Output Delay	t_{OD}	–1.6	0.74	ns
uSDHC Input/Card Outputs SD_CMD, SDx_DATAx in SDR50 (Reference to CLK)					
SD6	uSDHC Input Setup Time	t_{ISU}	2.5	—	ns
SD7	uSDHC Input Hold Time	t_{IH}	1.5	—	ns
uSDHC Input/Card Outputs SD_CMD, SDx_DATAx in SDR104 (Reference to CLK)[1]					
SD8	Card Output Data Window	t_{ODW}	$0.5 \times$ tCLK	—	ns

[1] Data window in SDR100 mode is variable.

4.12.5.4 HS200 Mode Timing

Figure 43 depicts the timing of HS200 mode, and Table 58 lists the HS200 timing characteristics.

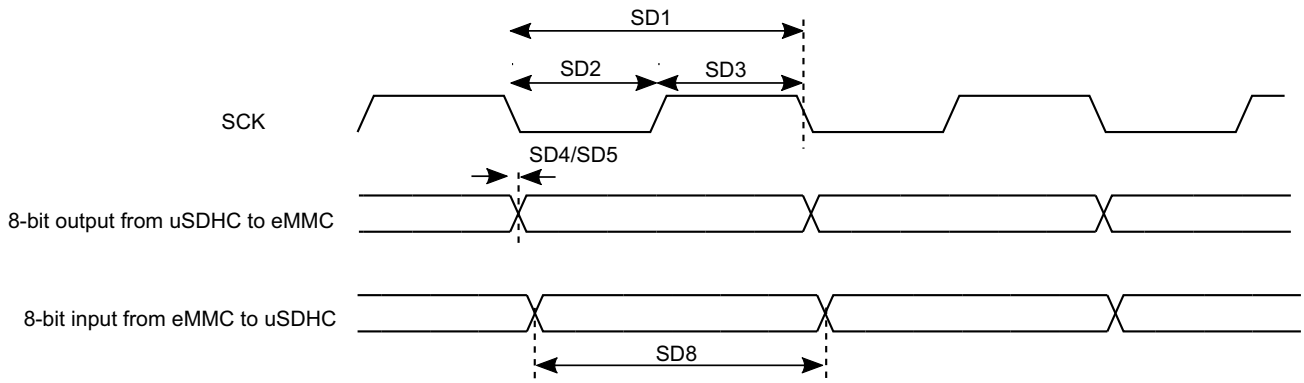

Figure 43. HS200 Mode Timing

Table 58. HS200 Interface Timing Specification

ID	Parameter	Symbols	Min	Max	Unit
Card Input Clock					
SD1	Clock Frequency Period	t_{CLK}	5.0	—	ns
SD2	Clock Low Time	t_{CL}	0.46 x t_{CLK}	0.54 x t_{CLK}	ns
SD3	Clock High Time	t_{CH}	0.46 x t_{CLK}	0.54 x t_{CLK}	ns
uSDHC Output/Card Inputs SD_CMD, SDx_DATAx in HS200 (Reference to CLK)					
SD5	uSDHC Output Delay	t_{OD}	–1.6	0.74	ns
uSDHC Input/Card Outputs SD_CMD, SDx_DATAx in HS200 (Reference to CLK)[1]					
SD8	Card Output Data Window	t_{ODW}	0.5 x t_{CLK}	—	ns

[1]HS200 is for 8 bits while SDR104 is for 4 bits.

4.12.5.5 Bus Operation Condition for 3.3 V and 1.8 V Signaling

Signaling level of SD/eMMC4.3 and eMMC4.4/4.41 modes is 3.3 V. Signaling level of SDR104/SDR50 mode is 1.8 V. The DC parameters for the NVCC_SD1, NVCC_SD2, and NVCC_SD4 supplies are identical to those shown in Table 25, “Single Voltage GPIO DC Parameters”. The DC parameters for the NVCC_LOW/NVCC_HIGH are identical to those shown in Table 26, “Dual Voltage GPIO I/O DC Parameters”.

4.12.6 Ethernet Controller (ENET) AC Electrical Specifications

The following timing specs are defined at the chip I/O pin and must be translated appropriately to arrive at timing specs/constraints for the physical interface.

4.12.6.1 ENET MII Mode Timing

This subsection describes MII receive, transmit, asynchronous inputs, and serial management signal timings.

4.12.6.1.1 MII Receive Signal Timing (ENET_RX_DATA3,2,1,0, ENET_RX_EN, ENET_RX_ER, and ENET_RX_CLK)

The receiver functions correctly up to an ENET_RX_CLK maximum frequency of 25 MHz + 1%. There is no minimum frequency requirement.

Figure 44 shows MII receive signal timings. Table 59 describes the timing parameters (M1–M4) shown in the figure.

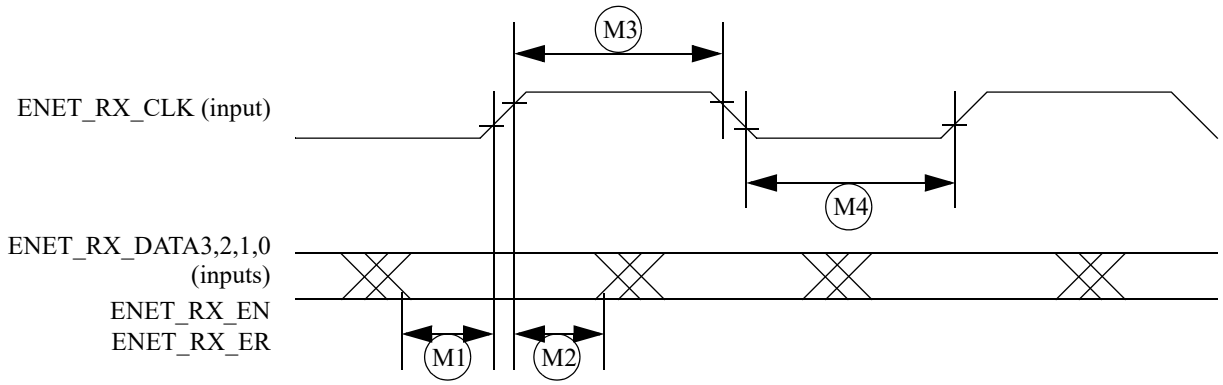

Figure 44. MII Receive Signal Timing Diagram

Table 59. MII Receive Signal Timing

ID	Characteristic[1]	Min	Max	Unit
M1	ENET_RX_DATA3,2,1,0, ENET_RX_EN, ENET_RX_ER to ENET_RX_CLK setup	5	—	ns
M2	ENET_RX_CLK to ENET_RX_DATA3,2,1,0, ENET_RX_EN, ENET_RX_ER hold	5	—	ns
M3	ENET_RX_CLK pulse width high	35%	65%	ENET_RX_CLK period
M4	ENET_RX_CLK pulse width low	35%	65%	ENET_RX_CLK period

[1] ENET_RX_EN, ENET_RX_CLK, and ENET0_RXD0 have the same timing in 10 Mbps 7-wire interface mode.

4.12.6.1.2 MII Transmit Signal Timing (ENET_TX_DATA3,2,1,0, ENET_TX_EN, ENET_TX_ER, and ENET_TX_CLK)

The transmitter functions correctly up to an ENET_TX_CLK maximum frequency of 25 MHz + 1%. There is no minimum frequency requirement.

Figure 45 shows MII transmit signal timings. Table 60 describes the timing parameters (M5–M8) shown in the figure.

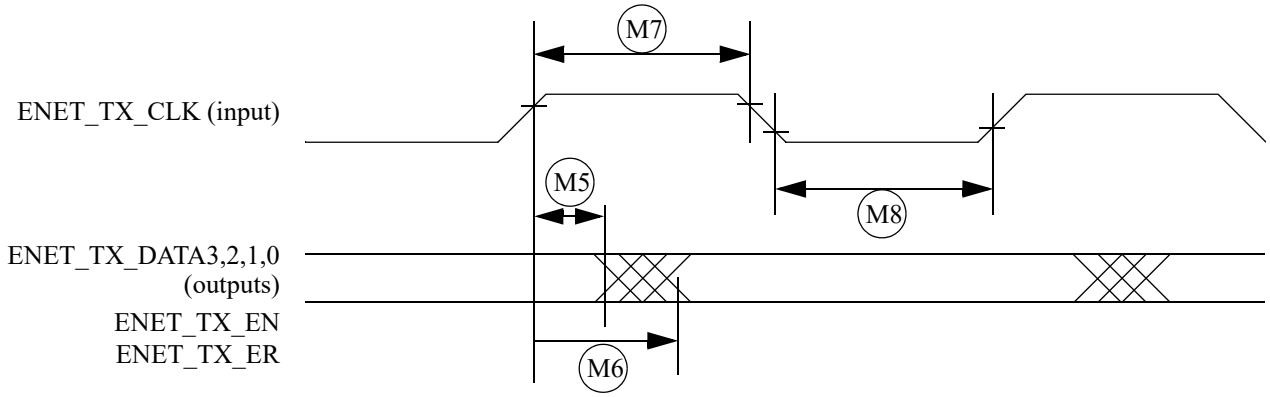

Figure 45. MII Transmit Signal Timing Diagram

Table 60. MII Transmit Signal Timing

ID	Characteristic[1]	Min	Max	Unit
M5	ENET_TX_CLK to ENET_TX_DATA3,2,1,0, ENET_TX_EN, ENET_TX_ER invalid	5	—	ns
M6	ENET_TX_CLK to ENET_TX_DATA3,2,1,0, ENET_TX_EN, ENET_TX_ER valid	—	20	ns
M7	ENET_TX_CLK pulse width high	35%	65%	ENET_TX_CLK period
M8	ENET_TX_CLK pulse width low	35%	65%	ENET_TX_CLK period

[1] ENET_TX_EN, ENET_TX_CLK, and ENET0_TXD0 have the same timing in 10-Mbps 7-wire interface mode.

4.12.6.1.3 MII Asynchronous Inputs Signal Timing (ENET_CRS and ENET_COL)

Figure 46 shows MII asynchronous input timings. Table 61 describes the timing parameter (M9) shown in the figure.

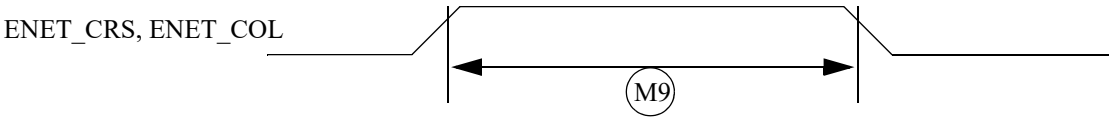

Figure 46. MII Async Inputs Timing Diagram

Table 61. MII Asynchronous Inputs Signal Timing

ID	Characteristic	Min	Max	Unit
M9[1]	ENET_CRS to ENET_COL minimum pulse width	1.5	—	ENET_TX_CLK period

[1] ENET_COL has the same timing in 10-Mbit 7-wire interface mode.

4.12.6.1.4 MII Serial Management Channel Timing (ENET_MDIO and ENET_MDC)

The MDC frequency is designed to be equal to or less than 2.5 MHz to be compatible with the IEEE 802.3 MII specification. However the ENET can function correctly with a maximum MDC frequency of 15 MHz.

Figure 47 shows MII asynchronous input timings. Table 62 describes the timing parameters (M10–M15) shown in the figure.

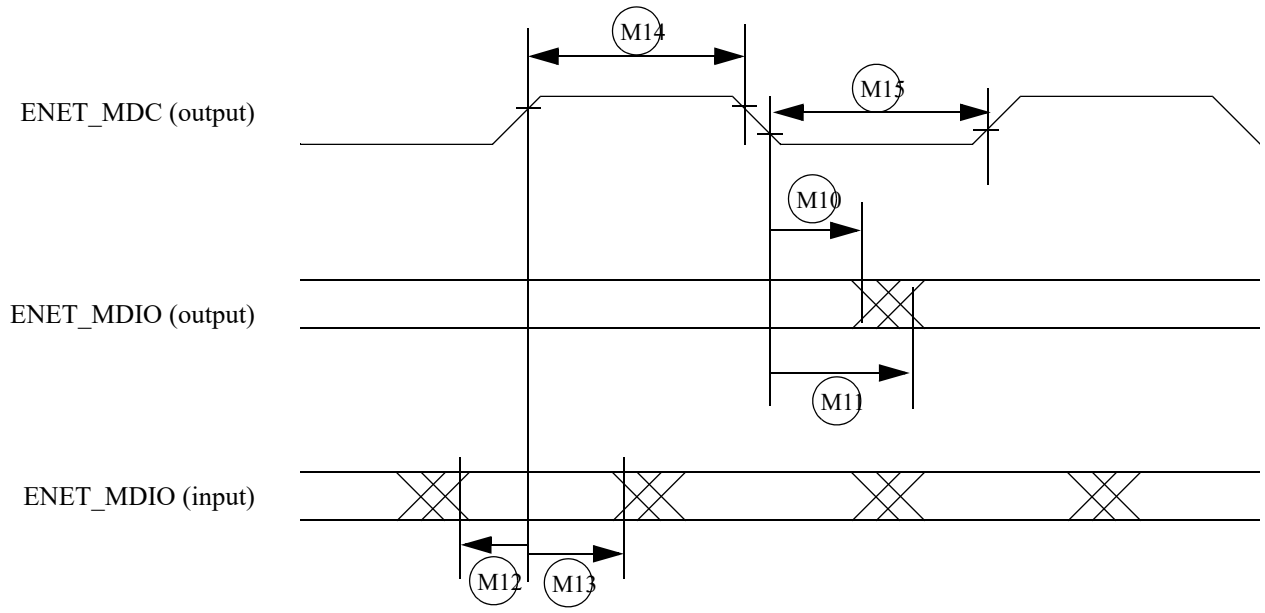

Figure 47. MII Serial Management Channel Timing Diagram

Table 62. MII Serial Management Channel Timing

ID	Characteristic	Min	Max	Unit
M10	ENET_MDC falling edge to ENET_MDIO output invalid (minimum propagation delay)	0	—	ns
M11	ENET_MDC falling edge to ENET_MDIO output valid (maximum propagation delay)	—	5	ns
M12	ENET_MDIO (input) to ENET_MDC rising edge setup	18	—	ns
M13	ENET_MDIO (input) to ENET_MDC rising edge hold	0	—	ns
M14	ENET_MDC pulse width high	40%	60%	ENET_MDC period
M15	ENET_MDC pulse width low	40%	60%	ENET_MDC period

4.12.6.2 RMII Mode Timing

In RMII mode, ENET_CLK is used as the REF_CLK, which is a 50 MHz ± 50 ppm continuous reference clock. ENET_RX_EN is used as the ENET_RX_EN in RMII. Other signals under RMII mode include ENET_TX_EN, ENET_TX_DATA[1:0], ENET_RX_DATA[1:0] and ENET_RX_ER.

Figure 48 shows RMII mode timings. Table 63 describes the timing parameters (M16–M21) shown in the figure.

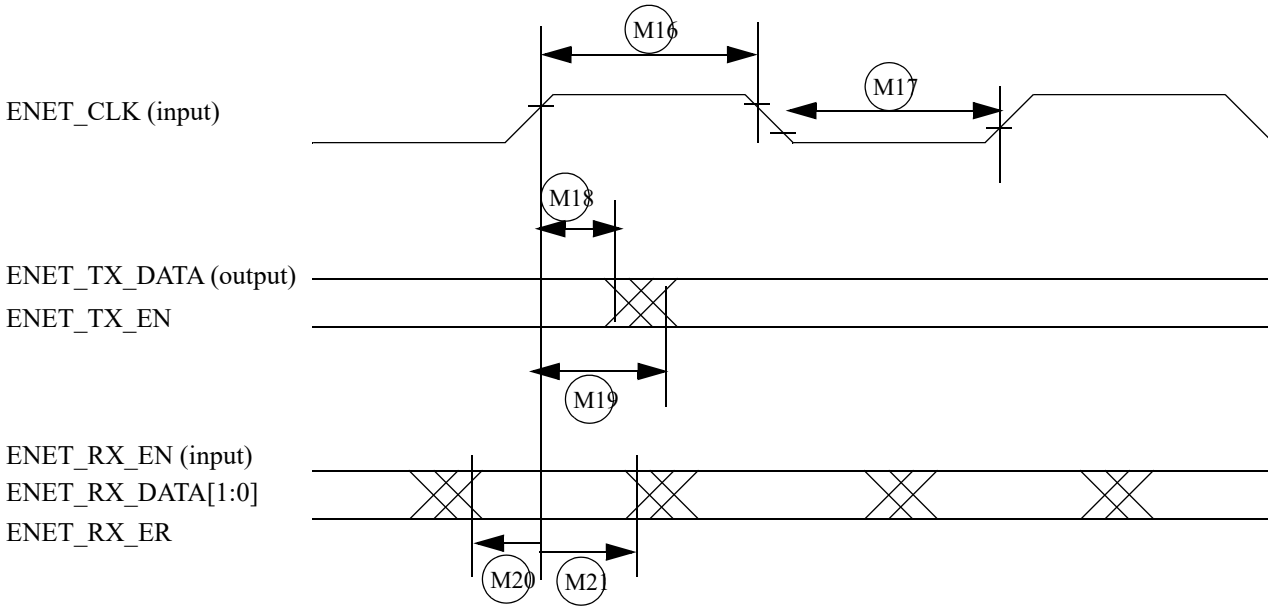

Figure 48. RMII Mode Signal Timing Diagram

Table 63. RMII Signal Timing

ID	Characteristic	Min	Max	Unit
M16	ENET_CLK pulse width high	35%	65%	ENET_CLK period
M17	ENET_CLK pulse width low	35%	65%	ENET_CLK period
M18	ENET_CLK to ENET0_TXD[1:0], ENET_TX_DATA invalid	4	—	ns
M19	ENET_CLK to ENET0_TXD[1:0], ENET_TX_DATA valid	—	13	ns
M20	ENET_RX_DATAD[1:0], ENET_RX_EN(ENET_RX_EN), ENET_RX_ER to ENET_CLK setup	2	—	ns
M21	ENET_CLK to ENET_RX_DATAD[1:0], ENET_RX_EN, ENET_RX_ER hold	2	—	ns

4.12.6.3 Signal Switching Specifications

The following timing specifications meet the requirements for RGMII interfaces for a range of transceiver devices.

Table 64. RGMII Signal Switching Specifications [1]

Symbol	Description	Min	Max	Unit
T_{cyc}[2]	Clock cycle duration	7.2	8.8	ns
T_{skewT}[3]	Data to clock output skew at transmitter	-500	500	ps

Table 64. RGMII Signal Switching Specifications [1] (continued)

Symbol	Description	Min	Max	Unit
T_{skewR}[4]	Data to clock input skew at receiver	1	2.6	ns
Duty_G[5]	Duty cycle for Gigabit	45	55	%
Duty_T[6]	Duty cycle for 10/100T	40	60	%
Tr/Tf	Rise/fall time (20–80%)	—	0.75	ns

1 For all signals, the maximum load is as follows:
CL = 5 pF at 1.8 V
CL = 10 pF at 2.5 V
See Figure 4 for the test circuit.

2 For 10 Mbps and 100 Mbps, T_{cyc} will scale to 400 ns ±40 ns and 40 ns ±4 ns respectively.

3 For all versions of RGMII prior to 2.0; This implies that PC board design will require clocks to be routed such that an additional trace delay of greater than 1.5 ns and less than 2.0 ns will be added to the associated clock signal. For 10/100, the Max value is unspecified.

4 For all versions of RGMII prior to 2.0; This implies that PC board design will require clocks to be routed such that an additional trace delay of greater than 1.5 ns and less than 2.0 ns will be added to the associated clock signal. For 10/100, the Max value is unspecified.

5 Duty cycle may be stretched/shrunk during speed changes or while transitioning to a received packet's clock domain as long as minimum duty cycle is not violated and stretching occurs for no more than three Tcyc of the lowest speed transitioned between.

6 Duty cycle may be stretched/shrunk during speed changes or while transitioning to a received packet's clock domain as long as minimum duty cycle is not violated and stretching occurs for no more than three Tcyc of the lowest speed transitioned between.

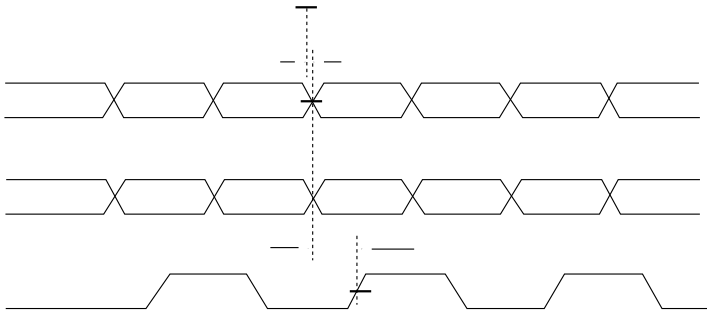

Figure 49. RGMII Transmit Signal Timing Diagram Original

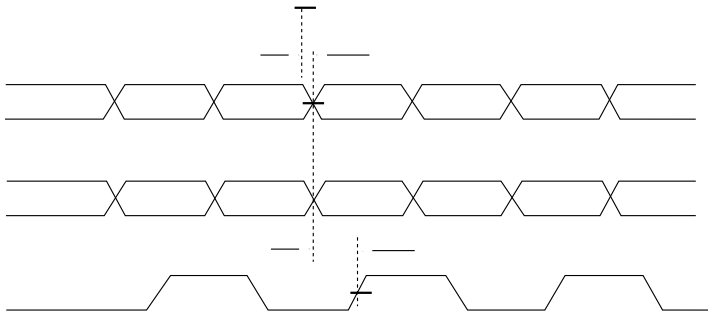

Figure 50. RGMII Receive Signal Timing Diagram Original

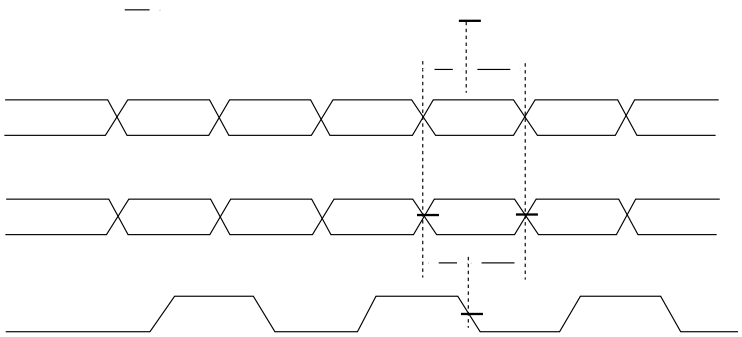

Figure 51. RGMII Receive Signal Timing Diagram with Internal Delay

4.12.7 Flexible Controller Area Network (FLEXCAN) AC Electrical Specifications

The Flexible Controller Area Network (FlexCAN) module is a communication controller implementing the CAN protocol according to the CAN 2.0B protocol specification. The processor has two CAN modules available for systems design. Tx and Rx ports for both modules are multiplexed with other I/O pins. See the IOMUXC chapter of the *i.MX 6SoloX Applications Processor Reference Manual* (IMX6SXRM) to see which pins expose Tx and Rx pins; these ports are named CAN_TX and CAN_RX, respectively.

4.12.8 I²C Module Timing Parameters

This section describes the timing parameters of the I²C module. Figure 52 depicts the timing of I²C module, and Table 65 lists the I²C module timing characteristics.

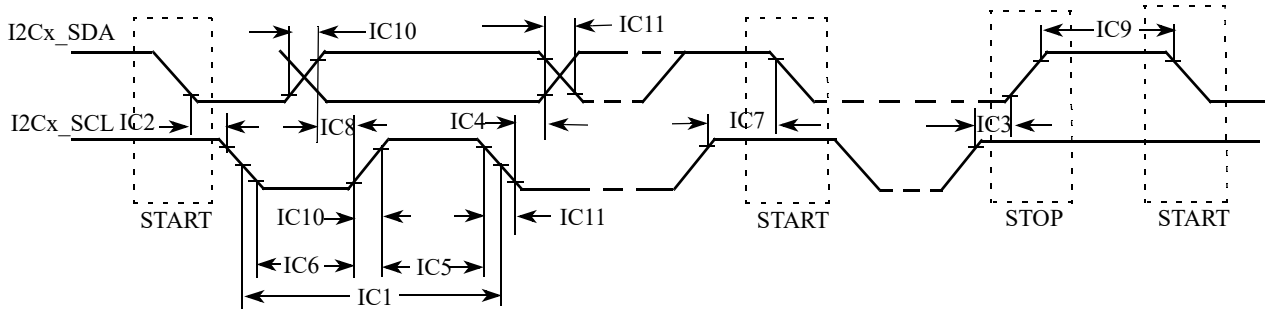

Figure 52. I²C Bus Timing

Table 65. I²C Module Timing Parameters

ID	Parameter	Standard Mode		Fast Mode		Unit
		Min	Max	Min	Max	
IC1	I2Cx_SCL cycle time	10	—	2.5	—	µs
IC2	Hold time (repeated) START condition	4.0	—	0.6	—	µs
IC3	Set-up time for STOP condition	4.0	—	0.6	—	µs
IC4	Data hold time	0[1]	3.45[2]	0[1]	0.9[2]	µs
IC5	HIGH Period of I2Cx_SCL Clock	4.0	—	0.6	—	µs
IC6	LOW Period of the I2Cx_SCL Clock	4.7	—	1.3	—	µs
IC7	Set-up time for a repeated START condition	4.7	—	0.6	—	µs
IC8	Data set-up time	250	—	100[3]	—	ns
IC9	Bus free time between a STOP and START condition	4.7	—	1.3	—	µs
IC10	Rise time of both I2Cx_SDA and I2Cx_SCL signals	—	1000	$20 + 0.1C_b$[4]	300	ns
IC11	Fall time of both I2Cx_SDA and I2Cx_SCL signals	—	300	$20 + 0.1C_b$[4]	300	ns
IC12	Capacitive load for each bus line (C_b)	—	400	—	400	pF

1 A device must internally provide a hold time of at least 300 ns for I2Cx_SDA signal to bridge the undefined region of the falling edge of I2Cx_SCL.

2 The maximum hold time has only to be met if the device does not stretch the LOW period (ID no IC5) of the I2Cx_SCL signal.

3 A Fast-mode I²C-bus device can be used in a Standard-mode I²C-bus system, but the requirement of Set-up time (ID No IC7) of 250 ns must be met. This automatically is the case if the device does not stretch the LOW period of the I2Cx_SCL signal. If such a device does stretch the LOW period of the I2Cx_SCL signal, it must output the next data bit to the I2Cx_SDA line max_rise_time (IC9) + data_setup_time (IC7) = 1000 + 250 = 1250 ns (according to the Standard-mode I²C-bus specification) before the I2Cx_SCL line is released.

4 C_b = total capacitance of one bus line in pF.

4.12.9 LCD Controller (LCDIF) Timing Parameters

Figure 53 shows the LCDIF timing and Table 66 lists the timing parameters.

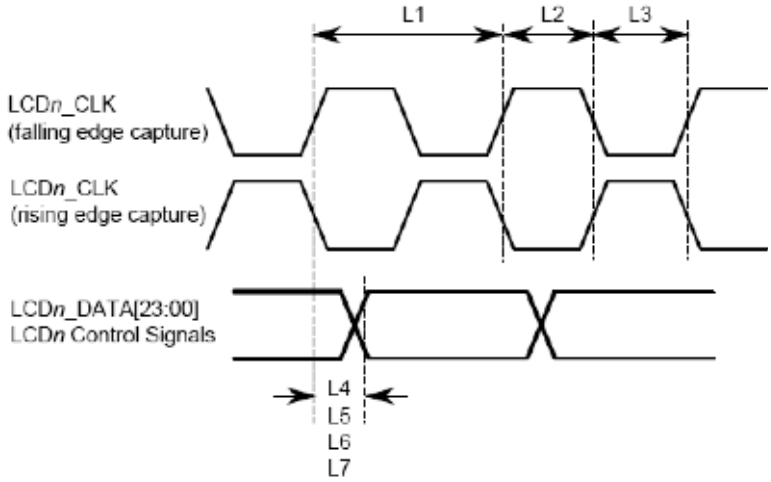

Figure 53. LCD Timing

Table 66. LCD Timing Parameters

ID	Parameter	Symbol	Min	Max	Unit
L1	LCD pixel clock frequency	tCLK(LCD)	-	150	MHz
L2	LCD pixel clock high (falling edge capture)	tCLKH(LCD)	3	-	ns
L3	LCD pixel clock low (rising edge capture)	tCLKL(LCD)	3	-	ns
L4	LCD pixel clock high to data valid (falling edge capture)	td(CLKH-DV)	-1	1	ns
L5	LCD pixel clock low to data valid (rising edge capture)	td(CLKL-DV)	-1	1	ns
L6	LCD pixel clock high to control signals valid (falling edge capture)	td(CLKH-CTRLV)	-1	1	ns
L7	LCD pixel clock low to control signals valid (rising edge capture)	td(CLKL-CTRLV)	-1	1	ns

4.12.9.1 LCDIF Display Interface Signal Mapping

Table 67. LCDIF Display Interface Signal Mapping

Pin Name	8-bit DOTCLK LCD IF	16-bit DOTCLK LCD IF	18-bit DOTCLK LCD IF	24-bit DOTCLK LCD IF	8-bit DVI LCD IF
LCD_RS	—	—	—	—	CCIR_CLK
LCD_CS	—	—	—	—	—
LCD_WR_RWn	—	—	—	—	—
LCD_RD_E	—	—	—	—	—
LCD_VSYNC* (two options)	LCD_VSYNC	LCD_VSYNC	LCD_VSYNC	LCD_VSYNC	—
LCD_HSYNC	LCD_HSYNC	LCD_HSYNC	LCD_HSYNC	LCD_HSYNC	—

Table 67. LCDIF Display Interface Signal Mapping (continued)

Pin Name	8-bit DOTCLK LCD IF	16-bit DOTCLK LCD IF	18-bit DOTCLK LCD IF	24-bit DOTCLK LCD IF	8-bit DVI LCD IF
LCD_DOTCLK	LCD_DOTCLK	LCD_DOTCLK	LCD_DOTCLK	LCD_DOTCLK	—
LCD_ENABLE	LCD_ENABLE	LCD_ENABLE	LCD_ENABLE	LCD_ENABLE	—
LCD_D23	—	—	—	R[7]	—
LCD_D22	—	—	—	R[6]	—
LCD_D21	—	—	—	R[5]	—
LCD_D20	—	—	—	R[4]	—
LCD_D19	—	—	—	R[3]	—
LCD_D18	—	—	—	R[2]	—
LCD_D17	—	—	R[5]	R[1]	—
LCD_D16	—	—	R[4]	R[0]	—
LCD_D15 / VSYNC*	—	R[4]	R[3]	G[7]	—
LCD_D14 / HSYNC**	—	R[3]	R[2]	G[6]	—
LCD_D13 / LCD_DOTCLK**	—	R[2]	R[1]	G[5]	—
LCD_D12 / ENABLE**	—	R[1]	R[0]	G[4]	—
LCD_D11	—	R[0]	G[5]	G[3]	—
LCD_D10	—	G[5]	G[4]	G[2]	—
LCD_D9	—	G[4]	G[3]	G[1]	—
LCD_D8	—	G[3]	G[2]	G[0]	—
LCD_D7	R[2]	G[2]	G[1]	B[7]	Y/C[7]
LCD_D6	R[1]	G[1]	G[0]	B[6]	Y/C[6]
LCD_D5	R[0]	G[0]	B[5]	B[5]	Y/C[5]
LCD_D4	G[2]	B[4]	B[4]	B[4]	Y/C[4]
LCD_D3	G[1]	B[3]	B[3]	B[3]	Y/C[3]
LCD_D2	G[0]	B[2]	B[2]	B[2]	Y/C[2]
LCD_D1	B[1]	B[1]	B[1]	B[1]	Y/C[1]
LCD_D0	B[0]	B[0]	B[0]	B[0]	Y/C[0]
LCD_RESET	LCD_RESET	LCD_RESET	LCD_RESET	LCD_RESET	—
LCD_BUSY / LCD_VSYNC	LCD_BUSY (OR optional LCD_VSYNC)	LCD_BUSY (OR optional LCD_VSYNC)	LCD_BUSY (OR optional LCD_VSYNC)	LCD_BUSY (OR optional LCD_VSYNC)	—

4.12.10 LVDS Display Bridge (LDB) Module Parameters

The LVDS interface complies with TIA/EIA 644-A standard. For more details, see TIA/EIA STANDARD 644-A, “Electrical Characteristics of Low Voltage Differential Signaling (LVDS) Interface Circuits”.

Table 68. LVDS Display Bridge (LDB) Electrical Specification

Parameter	Symbol	Test Condition	Min	Max	Units
Differential Voltage Output Voltage	V_{OD}	100 Ω Differential load	250	450	mV
Output Voltage High	Voh	100 Ω differential load (0 V Diff—Output High Voltage static)	1.25	1.6	V
Output Voltage Low	Vol	100 Ω differential load (0 V Diff—Output Low Voltage static)	0.9	1.25	V
Offset Static Voltage	V_{OS}	Two 49.9 Ω resistors in series between N-P terminal, with output in either Zero or One state, the voltage measured between the 2 resistors.	1.15	1.375	V
VOS Differential	V_{OSDIFF}	Difference in V_{OS} between a One and a Zero state	-50	50	mV
Output short circuited to GND	ISA ISB	With the output common shorted to GND	-24	24	mA
VT Full Load Test	VTLoad	100 Ω Differential load with a 3.74 kΩ load between GND and IO Supply Voltage	247	454	mV

4.12.11 PCIe PHY Parameters

The PCIe interface complies with PCIe specification Gen2 x1 lane and supports the PCI Express 1.1/2.0 standard.

4.12.11.1 PCIE_REXT Reference Resistor Connection

The impedance calibration process requires connection of reference resistor 200 Ω. 1% precision resistor on PCIE_REXT pads to ground. It is used for termination impedance calibration.

4.12.12 Pulse Width Modulator (PWM) Timing Parameters

This section describes the electrical information of the PWM. The PWM can be programmed to select one of three clock signals as its source frequency. The selected clock signal is passed through a prescaler before being input to the counter. The output is available at the pulse-width modulator output (PWMx_OUT) external pin.

Figure 54 depicts the timing of the PWM, and Table 69 lists the PWM timing parameters.

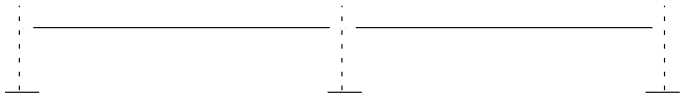

Figure 54. PWM Timing

Table 69. PWM Output Timing Parameters

ID	Parameter	Min	Max	Unit
—	PWM Module Clock Frequency	0	ipg_clk	MHz
P1	PWM output pulse width high	15	—	ns
P2	PWM output pulse width low	15	—	ns

4.12.13 QUAD SPI (QSPI) Timing Parameters

Measurement conditions are with 35 pF load on SCK and SIO pins and input slew rate of 1 V/ns.

4.12.13.1 SDR Mode

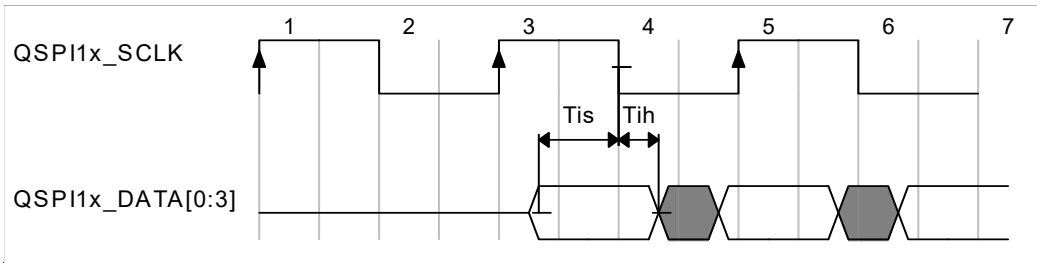

Figure 55. QuadSPI Input/Read Timing (SDR mode with internal sampling)

Table 70. QuadSPI Input/Read Timing (SDR mode with internal sampling)

Symbol	Parameter	Value		Unit
		Min	Max	
T_{is}	Setup time for incoming data	8.67	—	ns
T_{ih}	Hold time requirement for incoming data	0	—	ns

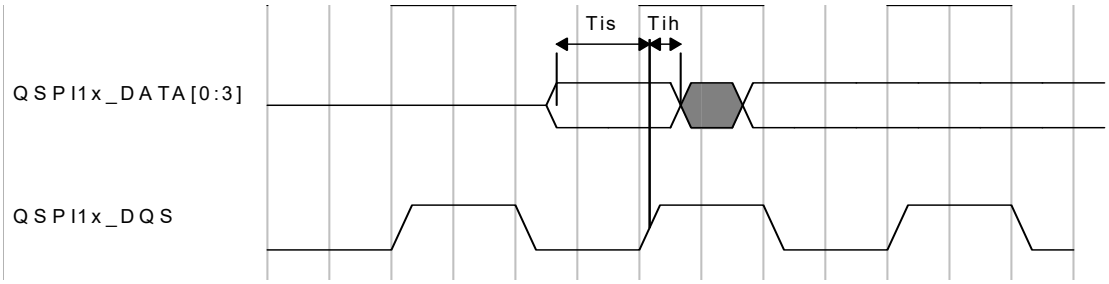

Figure 56. QuadSPI Input/Read Timing (SDR mode with loopback DQS sampling)

Table 71. QuadSPI Input/Read Timing (SDR mode with loopback DQS sampling)

Symbol	Parameter	Value		Unit
		Min	Max	
T_{is}	Setup time for incoming data	1	—	ns
T_{ih}	Hold time requirement for incoming data	1	—	ns

NOTE

- For internal sampling, the timing values assumes using sample point 0, that is QuadSPIx_SMPR[SDRSMP] = 0.
- For loopback DQS sampling, the data strobe is output to the DQS pad together with the serial clock. The data strobe is looped back from DQS pad and used to sample input data.

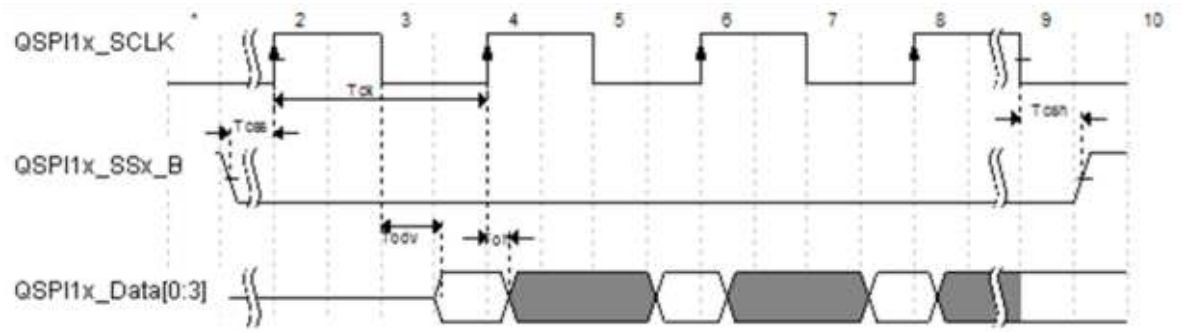

Figure 57. QuadSPI Output/Write Timing (SDR mode)

Table 72. QuadSPI Output/Write Timing (SDR mode)

Symbol	Parameter	Value		Unit
		Min	Max	
T_{ov}	Output Data Valid	—	3.2	ns
T_{oh}	Output Data Hold	0	—	ns
T_{ck}	SCK clock period	12.5	—	ns
T_{css}	Chip select output setup time	3	—	SCK cycle(s)
T_{csh}	Chip select output hold time	3	—	SCK cycle(s)

NOTE

Tcss and Tcsh are configured by the QuadSPIx_FLSHCR register, the default values of 3 are shown on the timing. Please refer to Reference Manual for further details.

4.12.13.2 DDR Mode

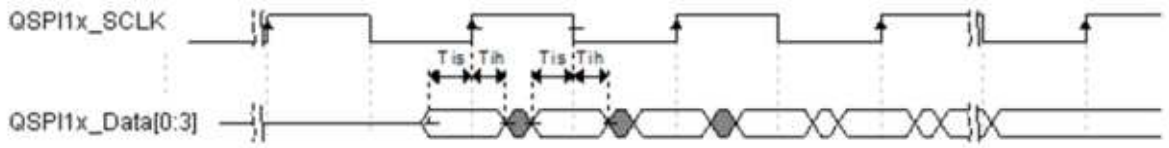

Figure 58. QuadSPI Input/Read Timing (DDR mode with internal sampling)

Table 73. QuadSPI Input/Read Timing (DDR mode with internal sampling)

Symbol	Parameter	Value		Unit
		Min	Max	
T_{is}	Setup time for incoming data	8.67	—	ns
T_{ih}	Hold time requirement for incoming data	0	—	ns

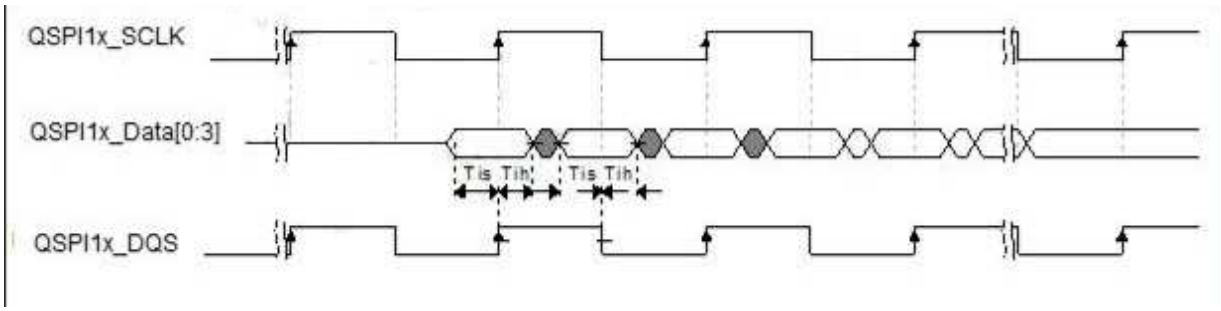

Figure 59. QuadSPI Input/Read Timing (DDR mode with loopback DQS sampling)

Table 74. QuadSPI Input/Read Timing (DDR mode with loopback DQS sampling)

Symbol	Parameter	Value		Unit
		Min	Max	
T_{is}	Setup time for incoming data	1	—	ns
T_{ih}	Hold time requirement for incoming data	1	—	ns

NOTE

- For internal sampling, the timing values assumes sample point 0, that is QuadSPIx_SMPR[DDRSMP] = 0.
- For loopback DQS sampling, the data strobe is output to the DQS pad together with the serial clock. The data strobe is looped back from the DQS pad and used to sample input data.

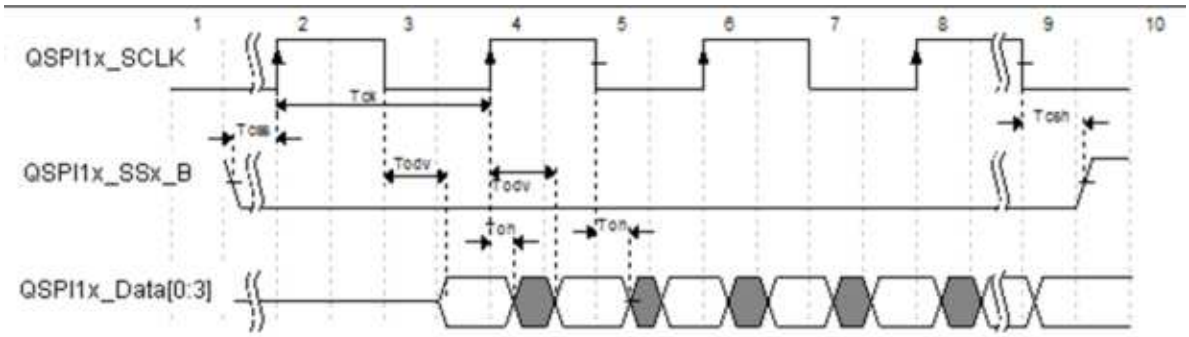

Figure 60. QuadSPI Output/Write Timing (DDR mode)

Table 75. QuadSPI Output/Write Timing (DDR mode)

Symbol	Parameter	Value		Unit
		Min	Max	
T_{ov}	Output Data Valid	—	2	ns
T_{oh}	Output Data Hold	1	—	ns
T_{ck}	SCK clock period	22	—	ns
T_{css}	Chip select output setup time	3	—	SCK cycle(s)
T_{csh}	Chip select output hold time	3	—	SCK cycle(s)

NOTE

Tcss and Tcsh are configured by the QuadSPIx_FLSHCR register, the default register values of 3 are shown on the timing. Please refer to Reference Manual for further details.

4.12.14 SAI/I2S Switching Specifications

This sections provides the AC timings for the SAI in master (clocks driven) and slave (clocks input) modes. All timings are given for non-inverted serial clock polarity (SAI_TCR[TSCKP] = 0, SAI_RCR[RSCKP] = 0) and non-inverted frame sync (SAI_TCR[TFSI] = 0, SAI_RCR[RFSI] = 0). If the polarity of the clock and/or the frame sync have been inverted, all the timings remain valid by inverting the clock signal (SAI_BCLK) and/or the frame sync (SAI_FS) shown in the figures below.

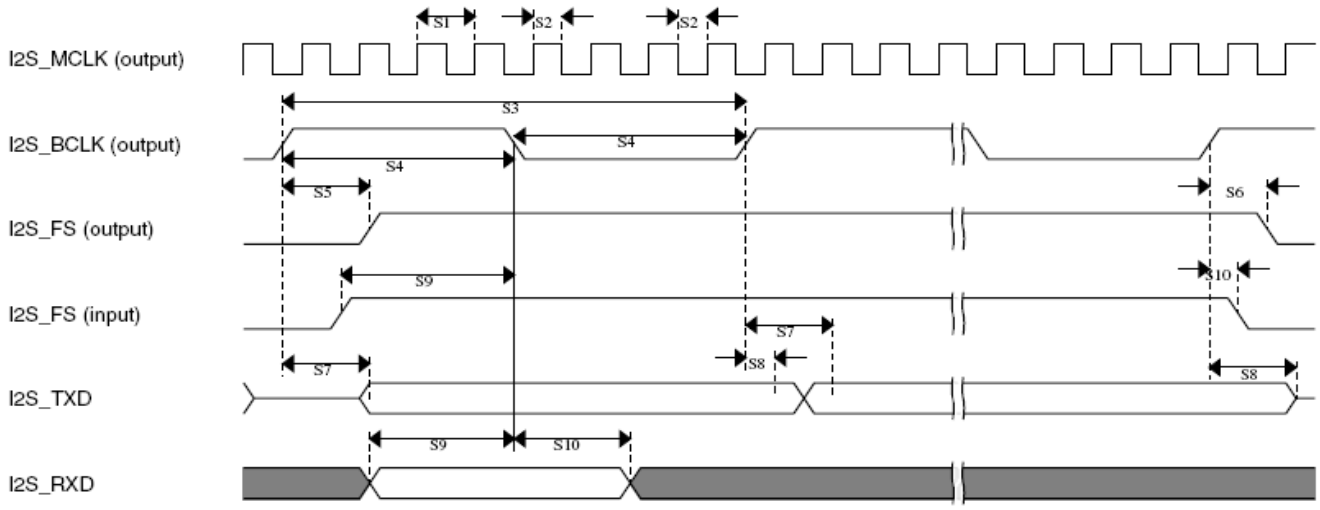

Figure 61. SAI Timing—Master Modes

Table 76. Master Mode SAI Timing

Num	Characteristic	Min	Max	Unit
S1	SAI_MCLK cycle time	20	—	ns
S2	SAI_MCLK pulse width high/low	40%	60%	MCLK period
S3	SAI_BCLK cycle time	2 x S1	—	ns
S4	SAI_BCLK pulse width high/low	40%	60%	BCLK period
S5	SAI_BCLK to SAI_FS output valid	—	15	ns
S6	SAI_BCLK to SAI_FS output invalid	0	—	ns
S7	SAI_BCLK to SAI_TXD valid	—	15	ns
S8	SAI_BCLK to SAI_TXD invalid	0	—	ns
S9	SAI_RXD/SAI_FS input setup before SAI_BCLK	15	—	ns
S10	SAI_RXD/SAI_FS input hold after SAI_BCLK	0	—	ns

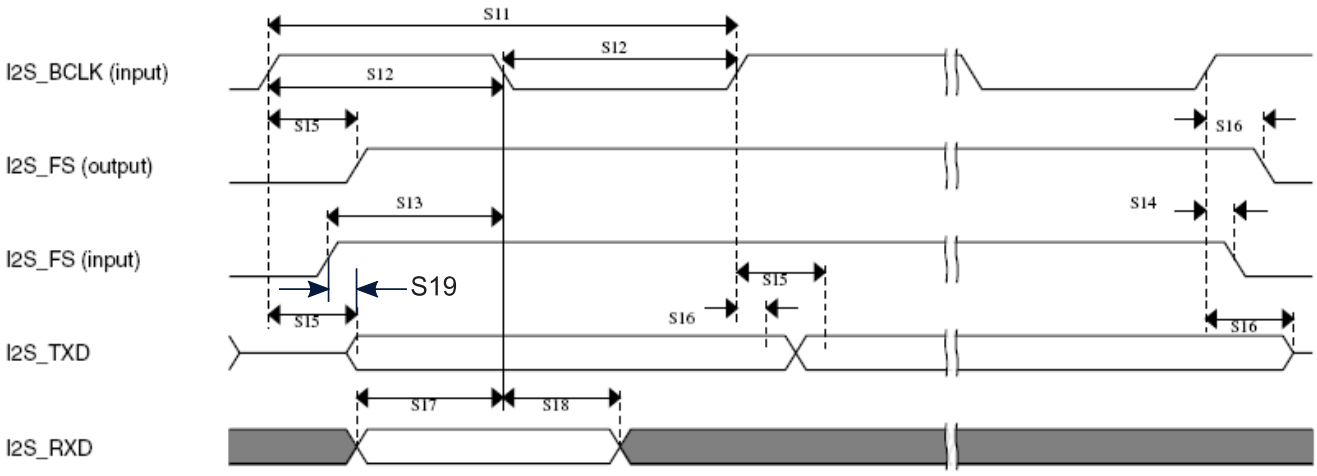

Figure 62. SAI Timing—Slave Modes

Table 77. Slave Mode SAI Timing

Num	Characteristic	Min	Max	Unit
S11	SAI_BCLK cycle time (input)	20	—	ns
S12	SAI_BCLK pulse width high/low (input)	40%	60%	BCLK period
S13	SAI_FS input setup before SAI_BCLK	10	—	ns
S14	SAI_FA input hold after SAI_BCLK	2	—	ns
S15	SAI_BCLK to SAI_TXD/SAI_FS output valid	—	20	ns
S16	SAI_BCLK to SAI_TXD/SAI_FS output invalid	0	—	ns
S17	SAI_RXD setup before SAI_BCLK	10	—	ns
S18	SAI_RXD hold after SAI_BCLK	2	—	ns
S19	I2S_TX_FX input assertion to I2S_TXD output valid[1]	—	25	ns

[1] Applies to first bit in each frame and only if the TCR4[FSE] bit is clear

4.12.15 SCAN JTAG Controller (SJC) Timing Parameters

Figure 63 depicts the SJC test clock input timing. Figure 64 depicts the SJC boundary scan timing. Figure 65 depicts the SJC test access port. Signal parameters are listed in Table 78.

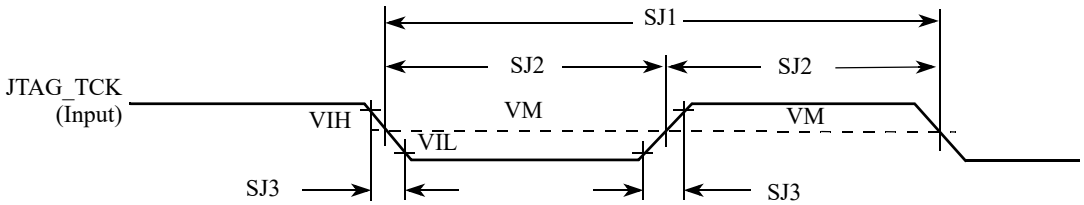

Figure 63. Test Clock Input Timing Diagram

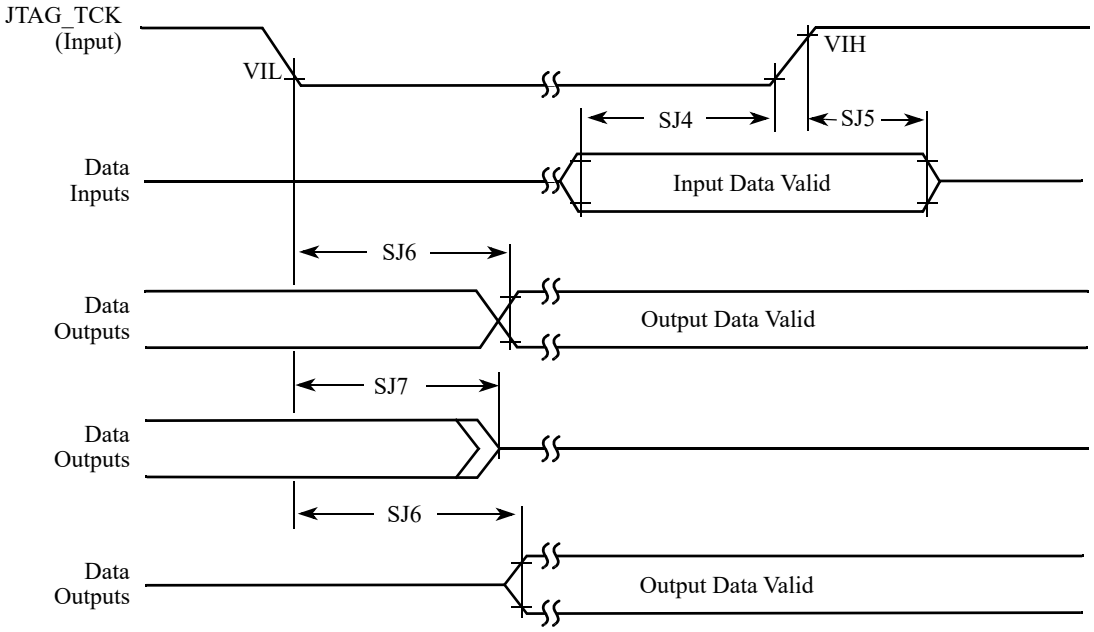

Figure 64. Boundary Scan (JTAG) Timing Diagram

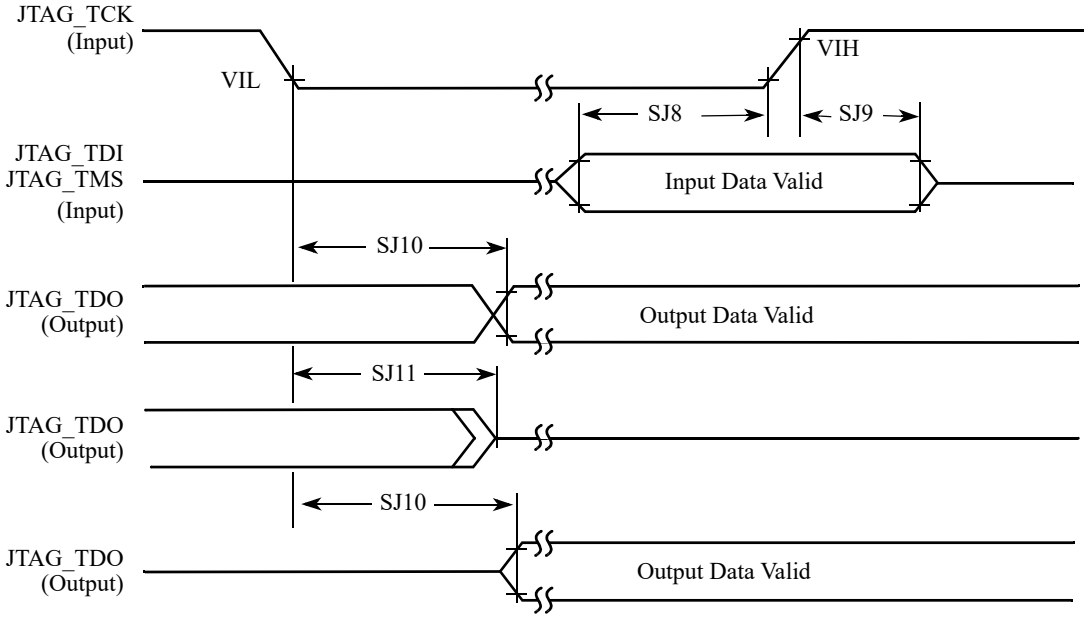

Figure 65. Test Access Port Timing Diagram

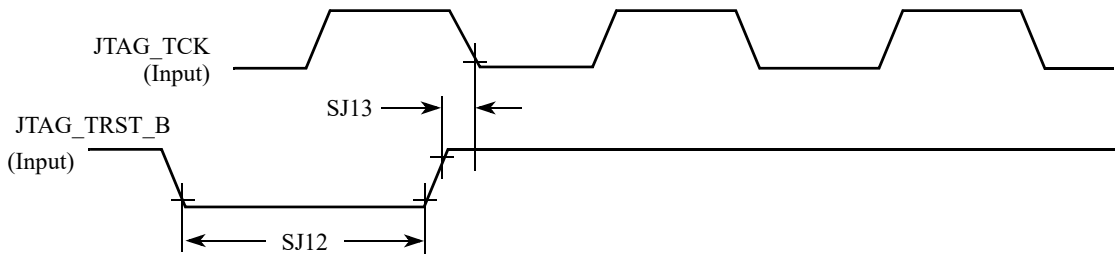

Figure 66. JTAG_TRST_B Timing Diagram

Table 78. JTAG Timing

ID	Parameter[1,2]	All Frequencies		Unit
		Min	Max	
SJ0	JTAG_TCK frequency of operation $1/(3 \bullet T_{DC})$[1]	0.001	22	MHz
SJ1	JTAG_TCK cycle time in crystal mode	45	—	ns
SJ2	JTAG_TCK clock pulse width measured at V_M[2]	22.5	—	ns
SJ3	JTAG_TCK rise and fall times	—	3	ns
SJ4	Boundary scan input data set-up time	5	—	ns
SJ5	Boundary scan input data hold time	24	—	ns
SJ6	JTAG_TCK low to output data valid	—	40	ns
SJ7	JTAG_TCK low to output high impedance	—	40	ns
SJ8	JTAG_TMS, JTAG_TDI data set-up time	5	—	ns
SJ9	JTAG_TMS, JTAG_TDI data hold time	25	—	ns
SJ10	JTAG_TCK low to JTAG_TDO data valid	—	44	ns
SJ11	JTAG_TCK low to JTAG_TDO high impedance	—	44	ns
SJ12	JTAG_TRST_B assert time	100	—	ns
SJ13	JTAG_TRST_B set-up time to JTAG_TCK low	40	—	ns

1 T_{DC} = target frequency of SJC
2 V_M = mid-point voltage

4.12.16 SPDIF Timing Parameters

The Sony/Philips Digital Interconnect Format (SPDIF) data is sent using the bi-phase marking code. When encoding, the SPDIF data signal is modulated by a clock that is twice the bit rate of the data signal.

Table 79 and Figure 67 and Figure 68 show SPDIF timing parameters for the Sony/Philips Digital Interconnect Format (SPDIF), including the timing of the modulating Rx clock (SPDIF_SR_CLK) for SPDIF in Rx mode and the timing of the modulating Tx clock (SPDIF_ST_CLK) for SPDIF in Tx mode.

Table 79. SPDIF Timing Parameters

Characteristics	Symbol	Timing Parameter Range		Unit
		Min	Max	
SPDIF_IN Skew: asynchronous inputs, no specs apply	—	—	0.7	ns
SPDIF_OUT output (Load = 50pf) • Skew • Transition rising • Transition falling	 — — —	 — — —	 1.5 24.2 31.3	ns
SPDIF_OUT1 output (Load = 30pf) • Skew • Transition rising • Transition falling	 — — —	 — — —	 1.5 13.6 18.0	ns
Modulating Rx clock (SPDIF_SR_CLK) period	srckp	40.0	—	ns
SPDIF_SR_CLK high period	srckph	16.0	—	ns
SPDIF_SR_CLK low period	srckpl	16.0	—	ns
Modulating Tx clock (SPDIF_ST_CLK) period	stclkp	40.0	—	ns
SPDIF_ST_CLK high period	stclkph	16.0	—	ns
SPDIF_ST_CLK low period	stclkpl	16.0	—	ns

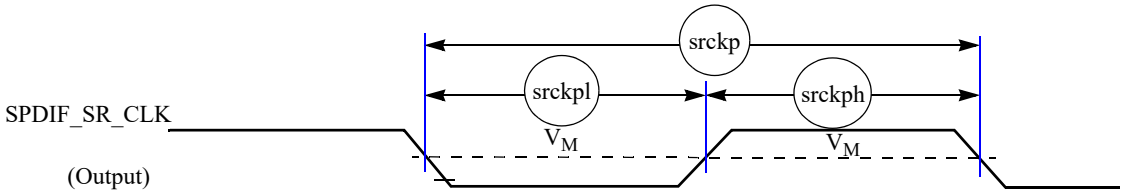

Figure 67. SPDIF_SR_CLK Timing Diagram

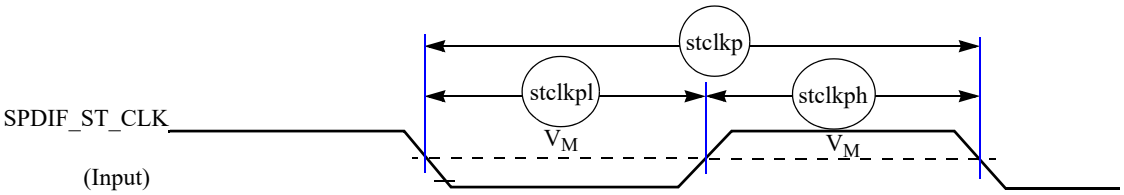

Figure 68. SPDIF_ST_CLK Timing Diagram

4.12.17 SSI Timing Parameters

This section describes the timing parameters of the SSI module. The connectivity of the serial synchronous interfaces are summarized in Table 80.

Table 80. AUDMUX Port Allocation

Port	Signal Nomenclature	Type and Access
AUDMUX port 1	SSI 1	Internal
AUDMUX port 2	SSI 2	Internal
AUDMUX port 3	AUD3	External— LCD or SD4 through IOMUXC
AUDMUX port 4	AUD4	External— ENET or NAND through IOMUXC
AUDMUX port 5	AUD5	External— KPP or SD1 through IOMUXC
AUDMUX port 6	AUD6	External— SD2 or CSI through IOMUXC
AUDMUX port 7	SSI 3	Internal

NOTE

The terms WL and BL used in the timing diagrams and tables refer to Word Length (WL) and Bit Length (BL).

4.12.17.1 SSI Transmitter Timing with Internal Clock

Figure 69 depicts the SSI transmitter internal clock timing and Table 81 lists the timing parameters for the SSI transmitter internal clock.

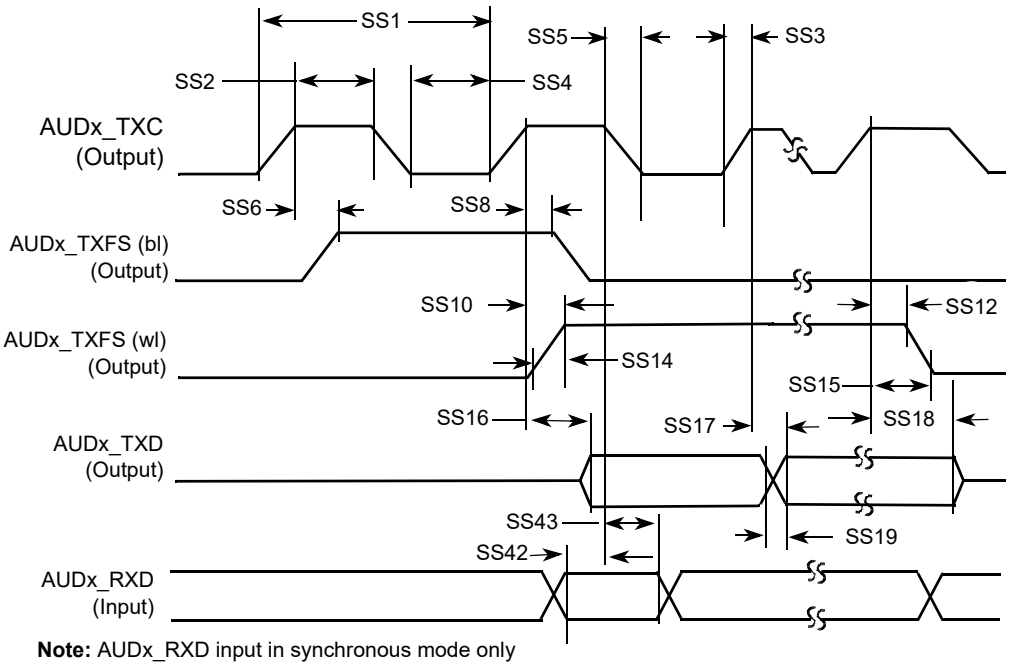

Figure 69. SSI Transmitter Internal Clock Timing Diagram

Table 81. SSI Transmitter Timing with Internal Clock

ID	Parameter	Min	Max	Unit
Internal Clock Operation				
SS1	AUDx_TXC/AUDxRXC clock period	81.4	—	ns
SS2	AUDx_TXC/AUDxRXC clock high period	36.0	—	ns
SS4	AUDx_TXC/AUDxRXC clock low period	36.0	—	ns
SS6	AUDx_TXC high to AUDx_TXFS (bl) high	—	15.0	ns
SS8	AUDx_TXC high to AUDx_TXFS (bl) low	—	15.0	ns
SS10	AUDx_TXC high to AUDx_TXFS (wl) high	—	15.0	ns
SS12	AUDx_TXC high to AUDx_TXFS (wl) low	—	15.0	ns
SS14	AUDx_TXC/AUDxRXC Internal AUDx_TXFS rise time	—	6.0	ns
SS15	AUDx_TXC/AUDxRXC Internal AUDx_TXFS fall time	—	6.0	ns
SS16	AUDx_TXC high to AUDx_TXD valid from high impedance	—	15.0	ns
SS17	AUDx_TXC high to AUDx_TXD high/low	—	15.0	ns
SS18	AUDx_TXC high to AUDx_TXD high impedance	—	15.0	ns
Synchronous Internal Clock Operation				
SS42	AUDx_RXD setup before AUDx_TXC falling	10.0	—	ns
SS43	AUDx_RXD hold after AUDx_TXC falling	0.0	—	ns

NOTE

- All the timings for the SSI are given for a non-inverted serial clock polarity (TSCKP/RSCKP = 0) and a non-inverted frame sync (TFSI/RFSI = 0). If the polarity of the clock and/or the frame sync have been inverted, all the timing remains valid by inverting the clock signal AUDx_TXC/AUDx_RXC and/or the frame sync AUDx_TXFS/AUDx_RXFS shown in the tables and in the figures.
- All timings are on Audiomux Pads when SSI is being used for data transfer.
- The terms, WL and BL, refer to Word Length (WL) and Bit Length (BL).
- For internal Frame Sync operation using external clock, the frame sync timing is same as that of transmit data (for example, during AC97 mode of operation).

4.12.17.2 SSI Receiver Timing with Internal Clock

Figure 70 depicts the SSI receiver internal clock timing and Table 82 lists the timing parameters for the receiver timing with the internal clock.

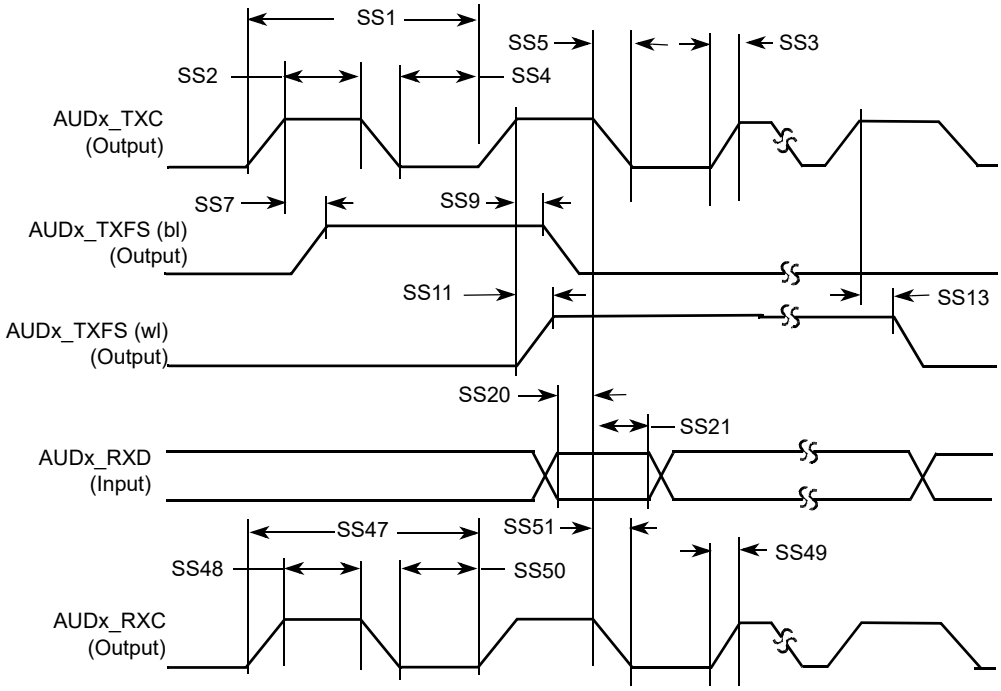

Figure 70. SSI Receiver Internal Clock Timing Diagram

Table 82. SSI Receiver Timing with Internal Clock

ID	Parameter	Min	Max	Unit
Internal Clock Operation				
SS1	AUDx_TXC/AUDx_RXC clock period	81.4	—	ns
SS2	AUDx_TXC/AUDx_RXC clock high period	36.0	—	ns
SS3	AUDx_TXC/AUDx_RXC clock rise time	—	6.0	ns
SS4	AUDx_TXC/AUDx_RXC clock low period	36.0	—	ns
SS5	AUDx_TXC/AUDx_RXC clock fall time	—	6.0	ns
SS7	AUDx_RXC high to AUDx_TXFS (bl) high	—	15.0	ns
SS9	AUDx_RXC high to AUDx_TXFS (bl) low	—	15.0	ns
SS11	AUDx_RXC high to AUDx_TXFS (wl) high	—	15.0	ns
SS13	AUDx_RXC high to AUDx_TXFS (wl) low	—	15.0	ns
SS20	AUDx_RXD setup time before AUDx_RXC low	10.0	—	ns
SS21	AUDx_RXD hold time after AUDx_RXC low	0.0	—	ns

Table 82. SSI Receiver Timing with Internal Clock (continued)

ID	Parameter	Min	Max	Unit
Oversampling Clock Operation				
SS47	Oversampling clock period	15.04	—	ns
SS48	Oversampling clock high period	6.0	—	ns
SS49	Oversampling clock rise time	—	3.0	ns
SS50	Oversampling clock low period	6.0	—	ns
SS51	Oversampling clock fall time	—	3.0	ns

NOTE

- All the timings for the SSI are given for a non-inverted serial clock polarity (TSCKP/RSCKP = 0) and a non-inverted frame sync (TFSI/RFSI = 0). If the polarity of the clock and/or the frame sync have been inverted, all the timing remains valid by inverting the clock signal AUDx_TXC/AUDx_RXC and/or the frame sync AUDx_TXFS/AUDx_RXFS shown in the tables and in the figures.
- All timings are on Audiomux Pads when SSI is being used for data transfer.
- The terms, WL and BL, refer to Word Length (WL) and Bit Length (BL).
- For internal Frame Sync operation using external clock, the frame sync timing is same as that of transmit data (for example, during AC97 mode of operation).

4.12.17.3 SSI Transmitter Timing with External Clock

Figure 71 depicts the SSI transmitter external clock timing and Table 83 lists the timing parameters for the transmitter timing with the external clock.

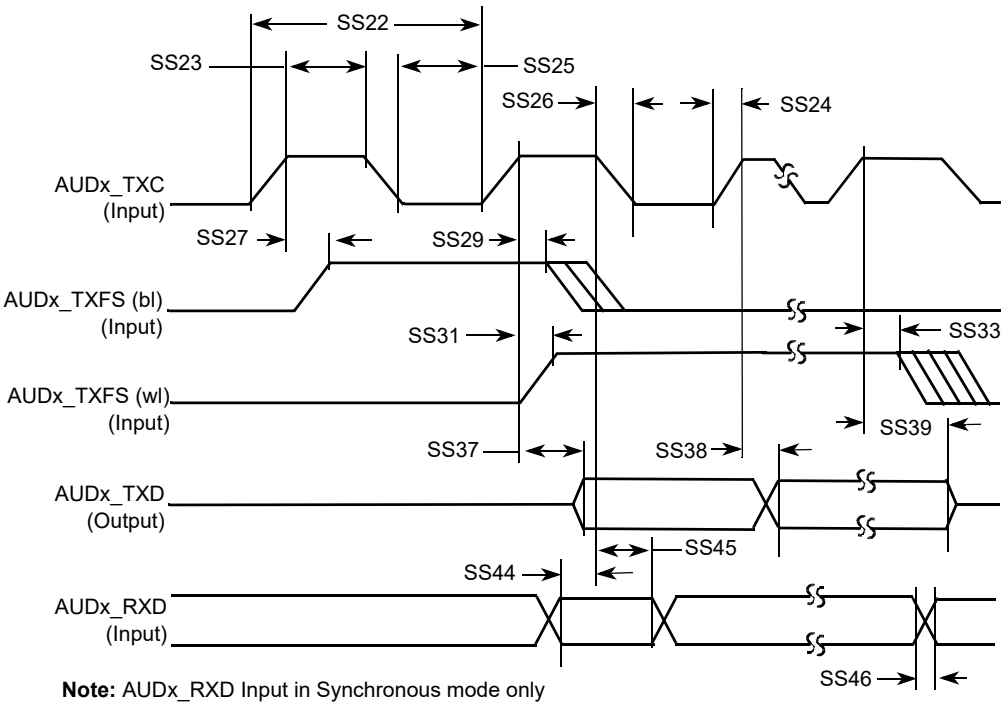

Figure 71. SSI Transmitter External Clock Timing Diagram

Table 83. SSI Transmitter Timing with External Clock

ID	Parameter	Min	Max	Unit
External Clock Operation				
SS22	AUDx_TXC/AUDx_RXC clock period	81.4	—	ns
SS23	AUDx_TXC/AUDx_RXC clock high period	36.0	—	ns
SS24	AUDx_TXC/AUDx_RXC clock rise time	—	6.0	ns
SS25	AUDx_TXC/AUDx_RXC clock low period	36.0	—	ns
SS26	AUDx_TXC/AUDx_RXC clock fall time	—	6.0	ns
SS27	AUDx_TXC high to AUDx_TXFS (bl) high	-10.0	15.0	ns
SS29	AUDx_TXC high to AUDx_TXFS (bl) low	10.0	—	ns
SS31	AUDx_TXC high to AUDx_TXFS (wl) high	-10.0	15.0	ns
SS33	AUDx_TXC high to AUDx_TXFS (wl) low	10.0	—	ns
SS37	AUDx_TXC high to AUDx_TXD valid from high impedance	—	15.0	ns
SS38	AUDx_TXC high to AUDx_TXD high/low	—	15.0	ns
SS39	AUDx_TXC high to AUDx_TXD high impedance	—	15.0	ns

Table 83. SSI Transmitter Timing with External Clock (continued)

ID	Parameter	Min	Max	Unit
Synchronous External Clock Operation				
SS44	AUDx_RXD setup before AUDx_TXC falling	10.0	—	ns
SS45	AUDx_RXD hold after AUDx_TXC falling	2.0	—	ns
SS46	AUDx_RXD rise/fall time	—	6.0	ns

NOTE

- All the timings for the SSI are given for a non-inverted serial clock polarity (TSCKP/RSCKP = 0) and a non-inverted frame sync (TFSI/RFSI = 0). If the polarity of the clock and/or the frame sync have been inverted, all the timing remains valid by inverting the clock signal AUDx_TXC/AUDx_RXC and/or the frame sync AUDx_TXFS/AUDx_RXFS shown in the tables and in the figures.
- All timings are on Audiomux Pads when SSI is being used for data transfer.
- The terms WL and BL refer to Word Length (WL) and Bit Length (BL).
- For internal Frame Sync operation using external clock, the frame sync timing is same as that of transmit data (for example, during AC97 mode of operation).

4.12.17.4 SSI Receiver Timing with External Clock

Figure 72 depicts the SSI receiver external clock timing and Table 84 lists the timing parameters for the receiver timing with the external clock.

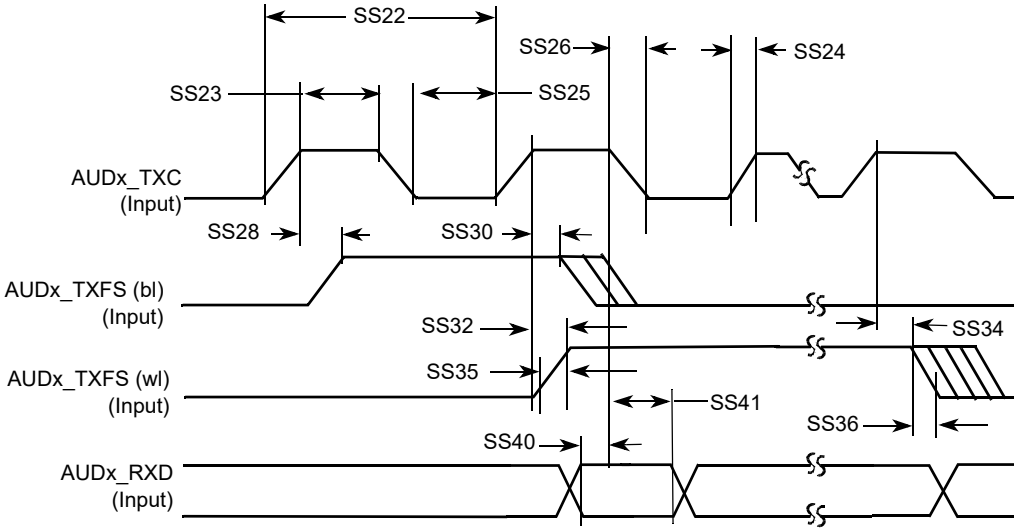

Figure 72. SSI Receiver External Clock Timing Diagram

Table 84. SSI Receiver Timing with External Clock

ID	Parameter	Min	Max	Unit
External Clock Operation				
SS22	AUDx_TXC/AUDx_RXC clock period	81.4	—	ns
SS23	AUDx_TXC/AUDx_RXC clock high period	36	—	ns
SS24	AUDx_TXC/AUDx_RXC clock rise time	—	6.0	ns
SS25	AUDx_TXC/AUDx_RXC clock low period	36	—	ns
SS26	AUDx_TXC/AUDx_RXC clock fall time	—	6.0	ns
SS28	AUDx_RXC high to AUDx_TXFS (bl) high	-10	15.0	ns
SS30	AUDx_RXC high to AUDx_TXFS (bl) low	10	—	ns
SS32	AUDx_RXC high to AUDx_TXFS (wl) high	-10	15.0	ns
SS34	AUDx_RXC high to AUDx_TXFS (wl) low	10	—	ns
SS35	AUDx_TXC/AUDx_RXC External AUDx_TXFS rise time	—	6.0	ns
SS36	AUDx_TXC/AUDx_RXC External AUDx_TXFS fall time	—	6.0	ns
SS40	AUDx_RXD setup time before AUDx_RXC low	10	—	ns
SS41	AUDx_RXD hold time after AUDx_RXC low	2	—	ns

NOTE

- All the timings for the SSI are given for a non-inverted serial clock polarity (TSCKP/RSCKP = 0) and a non-inverted frame sync (TFSI/RFSI = 0). If the polarity of the clock and/or the frame sync have been inverted, all the timing remains valid by inverting the clock signal AUDx_TXC/AUDx_RXC and/or the frame sync AUDx_TXFS/AUDx_RXFS shown in the tables and in the figures.
- All timings are on Audiomux Pads when SSI is being used for data transfer.
- The terms WL and BL refer to Word Length (WL) and Bit Length(BL).
- For internal Frame Sync operation using external clock, the frame sync timing is same as that of transmit data (for example, during AC97 mode of operation).

4.12.18 UART I/O Configuration and Timing Parameters

4.12.18.1 UART RS-232 Serial Mode Timing

The following sections describe the electrical information of the UART module in the RS-232 mode.

4.12.18.1.1 UART Transmitter

Figure 73 depicts the transmit timing of UART in the RS-232 serial mode, with 8 data bit/1 stop bit format. Table 85 lists the UART RS-232 serial mode transmit timing characteristics.

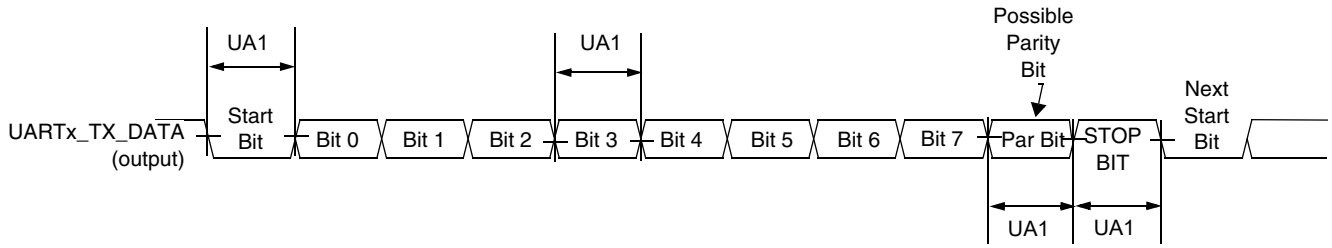

Figure 73. UART RS-232 Serial Mode Transmit Timing Diagram

Table 85. RS-232 Serial Mode Transmit Timing Parameters

ID	Parameter	Symbol	Min	Max	Unit
UA1	Transmit Bit Time	t_{Tbit}	$1/F_{baud_rate}$[1] - T_{ref_clk}[2]	$1/F_{baud_rate} + T_{ref_clk}$	—

[1] F_{baud_rate}: Baud rate frequency. The maximum baud rate the UART can support is (*ipg_perclk* frequency)/16.

[2] T_{ref_clk}: The period of UART reference clock *ref_clk* (*ipg_perclk* after RFDIV divider).

4.12.18.1.2 UART Receiver

Figure 74 depicts the RS-232 serial mode receive timing with 8 data bit/1 stop bit format. Table 86 lists serial mode receive timing characteristics.

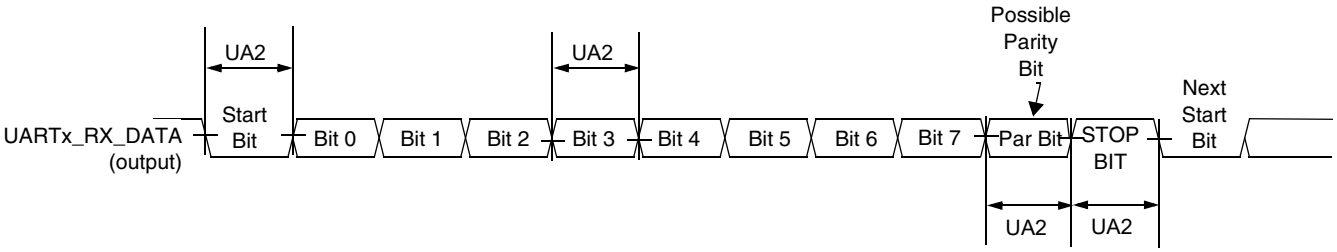

Figure 74. UART RS-232 Serial Mode Receive Timing Diagram

Table 86. RS-232 Serial Mode Receive Timing Parameters

ID	Parameter	Symbol	Min	Max	Unit
UA2	Receive Bit Time[1]	t_{Rbit}	$1/F_{baud_rate}$[2] - $1/(16 \times F_{baud_rate})$	$1/F_{baud_rate} + 1/(16 \times F_{baud_rate})$	—

[1] The UART receiver can tolerate $1/(16 \times F_{baud_rate})$ tolerance in each bit. But accumulation tolerance in one frame must not exceed $3/(16 \times F_{baud_rate})$.

[2] F_{baud_rate}: Baud rate frequency. The maximum baud rate the UART can support is (*ipg_perclk* frequency)/16.

4.12.18.1.3 UART IrDA Mode Timing

The following subsections give the UART transmit and receive timings in IrDA mode.

UART IrDA Mode Transmitter

Figure 75 depicts the UART IrDA mode transmit timing, with 8 data bit/1 stop bit format. Table 87 lists the transmit timing characteristics.

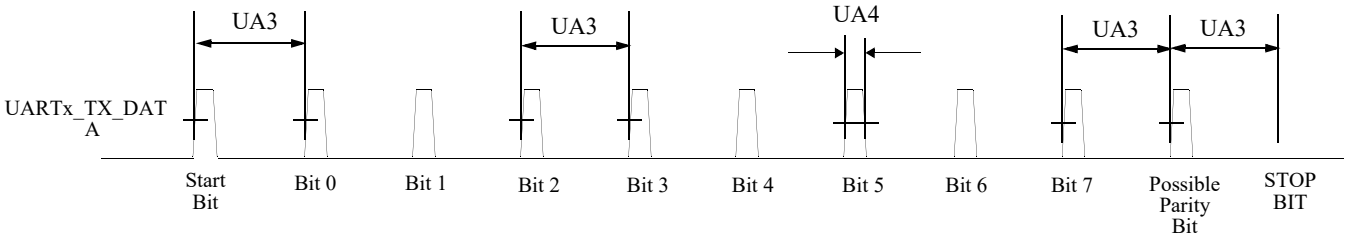

Figure 75. UART IrDA Mode Transmit Timing Diagram

Table 87. IrDA Mode Transmit Timing Parameters

ID	Parameter	Symbol	Min	Max	Unit
UA3	Transmit Bit Time in IrDA mode	t_{TIRbit}	$1/F_{baud_rate}$[1] - T_{ref_clk}[2]	$1/F_{baud_rate} + T_{ref_clk}$	—
UA4	Transmit IR Pulse Duration	$t_{TIRpulse}$	$(3/16) \times (1/F_{baud_rate}) - T_{ref_clk}$	$(3/16) \times (1/F_{baud_rate}) + T_{ref_clk}$	—

[1] F_{baud_rate}: Baud rate frequency. The maximum baud rate the UART can support is (*ipg_perclk* frequency)/16.
[2] T_{ref_clk}: The period of UART reference clock *ref_clk* (*ipg_perclk* after RFDIV divider).

UART IrDA Mode Receiver

Figure 76 depicts the UART IrDA mode receive timing, with 8 data bit/1 stop bit format. Table 88 lists the receive timing characteristics.

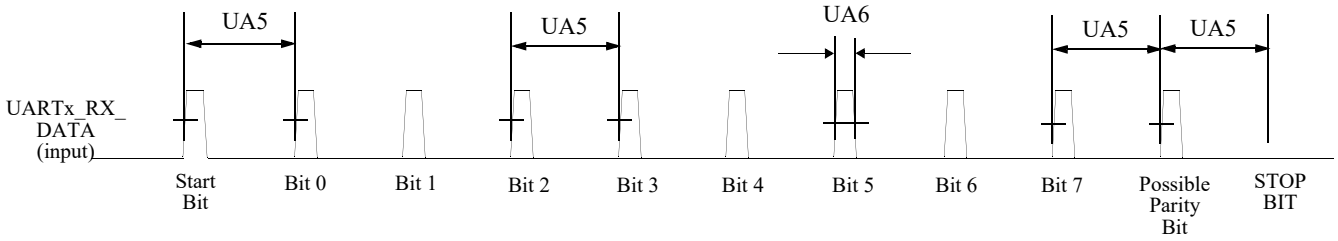

Figure 76. UART IrDA Mode Receive Timing Diagram

Table 88. IrDA Mode Receive Timing Parameters

ID	Parameter	Symbol	Min	Max	Unit
UA5	Receive Bit Time[1] in IrDA mode	t_{RIRbit}	$1/F_{baud_rate}$[2] - $1/(16 \times F_{baud_rate})$	$1/F_{baud_rate} + 1/(16 \times F_{baud_rate})$	—
UA6	Receive IR Pulse Duration	$t_{RIRpulse}$	1.41 µs	$(5/16) \times (1/F_{baud_rate})$	—

[1] The UART receiver can tolerate 1/(16 x F_{baud_rate}) tolerance in each bit. But accumulation tolerance in one frame must not exceed 3/(16 x F_{baud_rate}).

[2] F_{baud_rate}: Baud rate frequency. The maximum baud rate the UART can support is (*ipg_perclk* frequency)/16.

4.12.19 USB HSIC Timings

This section describes the electrical information of the USB HSIC port.

NOTE

In Figure 77, HSIC is a DDR interface and the timing parameters shown refer to both rising and falling edges.

4.12.19.1 Transmit Timing

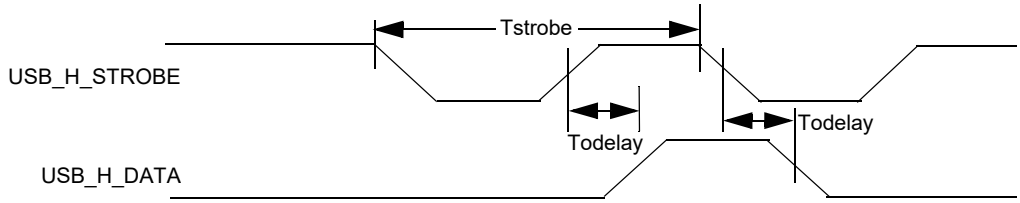

Figure 77. USB HSIC Transmit Waveform

Table 89. USB HSIC Transmit Parameters

Name	Parameter	Min	Max	Unit	Comment
Tstrobe	strobe period	4.166	4.167	ns	—
Todelay	data output delay time	550	1350	ps	Measured at 50% point
Tslew	strobe/data rising/falling time	0.7	2	V/ns	Averaged from 30% – 70% points

4.12.19.2 Receive Timing

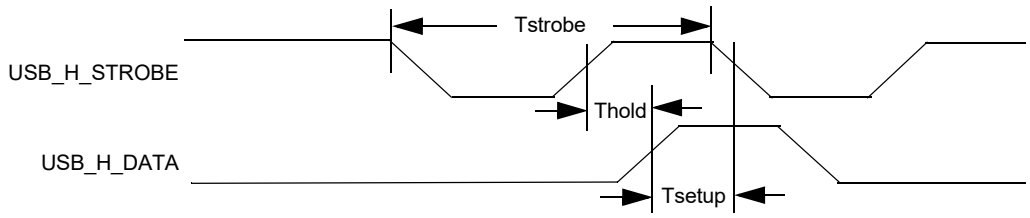

Figure 78. USB HSIC Receive Waveform

Table 90. USB HSIC Receive Parameters[1]

Name	Parameter	Min	Max	Unit	Comment
Tstrobe	strobe period	4.166	4.167	ns	—
Thold	data hold time	300	—	ps	Measured at 50% point

Table 90. USB HSIC Receive Parameters[1] (continued)

Name	Parameter	Min	Max	Unit	Comment
Tsetup	data setup time	365	—	ps	Measured at 50% point
Tslew	strobe/data rising/falling time	0.7	2	V/ns	Averaged from 30% – 70% points

[1] The timings in the table are guaranteed when:
—AC I/O voltage is between 0.9x to 1x of the I/O supply
—DDR_SEL configuration bits of the I/O are set to (10)b

4.12.20 USB PHY Parameters

This section describes the USB-OTG PHY and the USB Host port PHY parameters.

The USB PHY meets the electrical compliance requirements defined in revision 2.0 of the *USB On-The-Go and Embedded Host Supplement to the USB 2.0 Specification* with the amendments below (*On-The-Go and Embedded Host Supplement to the USB Revision 2.0 Specification* is not applicable to Host port).

- USB ENGINEERING CHANGE NOTICE
  - Title: 5V Short Circuit Withstand Requirement Change
  - Applies to: Universal Serial Bus Specification, Revision 2.0
- Errata for USB Revision 2.0 April 27, 2000 as of 12/7/2000
- USB ENGINEERING CHANGE NOTICE
  - Title: Pull-up/Pull-down resistors
  - Applies to: Universal Serial Bus Specification, Revision 2.0
- USB ENGINEERING CHANGE NOTICE
  - Title: Suspend Current Limit Changes
  - Applies to: Universal Serial Bus Specification, Revision 2.0
- USB ENGINEERING CHANGE NOTICE
  - Title: USB 2.0 Phase Locked SOFs
  - Applies to: Universal Serial Bus Specification, Revision 2.0
- On-The-Go and Embedded Host Supplement to the USB Revision 2.0 Specification
  - Revision 2.0 plus errata and ECN June 4, 2010
- Battery Charging Specification (available from USB-IF)
  - Revision 1.2, December 7, 2010
  - Portable device only

4.13 A/D Converter

4.13.1 12-bit ADC Electrical Characteristics

4.13.1.1 12-bit ADC Operating Conditions

Table 91. 12-bit ADC Operating Conditions

Characteristic	Conditions	Symbol	Min	Typ[1]	Max	Unit	Comment
Supply voltage	Absolute	VDDA_ADC_3P3	3.0	-	3.6	V	—
	Delta to VDD (VDD-VDDA_ADC_3P3)[2]	VDDA_ADC_3P3	-100	0	100	mV	—
Ground voltage	Delta to VSS (VSS-VSSAD)	ΔVSSAD	-100	0	100	mV	—
Ref Voltage High	—	V_{REFH}	1.13	VDDA_ADC_3P3	VDDA_ADC_3P3	V	—
Ref Voltage Low	—	V_{REFL}	V_{SSAD}	V_{SSAD}	V_{SSAD}	V	—
Input Voltage	—	V_{ADIN}	V_{REFL}	—	V_{REFH}	V	—
Input Capacitance	8/10/12 bit modes	C_{ADIN}	—	1.5	2	pF	—
Input Resistance	ADLPC=0, ADHSC=1	R_{ADIN}	—	5	7	kohms	—
	ADLPC=0, ADHSC=0		—	12.5	15	kohms	—
	ADLPC=1, ADHSC=0		—	25	30	kohms	—
Analog Source Resistance	12 bit mode f_{ADCK} = 40MHz ADLSMP=0, ADSTS=10, ADHSC=1	R_{AS}	—	—	1	kohms	T_{samp}=150ns
R_{AS} depends on Sample Time Setting (ADLSMP, ADSTS) and ADC Power Mode (ADHSC, ADLPC). See charts for Minimum Sample Time versus R_{AS}							
ADC Conversion Clock Frequency	ADLPC=0, ADHSC=1 12 bit mode	f_{ADCK}	4	—	40	MHz	—
	ADLPC=0, ADHSC=0 12 bit mode		4	—	30	MHz	—
	ADLPC=1, ADHSC=0 12 bit mode		4	—	20	MHz	—

[1] Typical values assume VDDA_ADC_3P3= 3.0 V, Temp = 25°C, f_{ADCK}=20 MHz unless otherwise stated. Typical values are for reference only and are not tested in production.
[2] DC potential difference

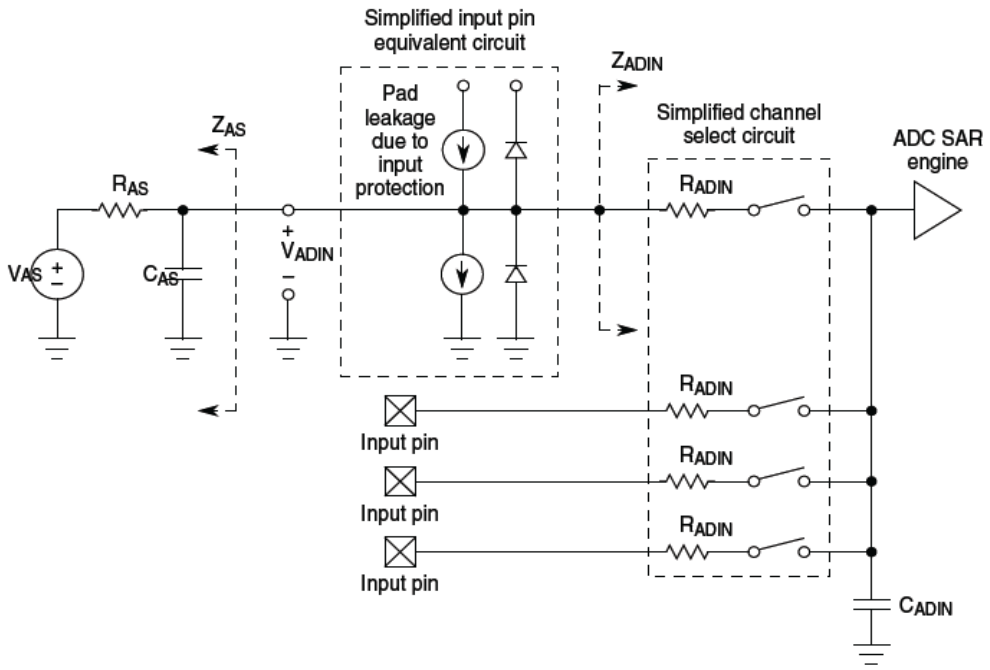

Figure 79. 12-bit ADC Input Impedance Equivalency Diagram

4.13.1.2 12-bit ADC Characteristics

Table 92. 12-bit ADC Characteristics (V_{REFH} = VDDA_ADC_3P3, V_{REFL} = V_{SSAD})

Characteristic	Conditions[1]	Symbol	Min	Typ[2]	Max	Unit	Comment
[L:] Supply Current	ADLPC=1, ADHSC=0	I_{DDAD}	—	250	—	μA	ADLSMP=0 ADSTS=10 ADCO=1
	ADLPC=0, ADHSC=0			350			
	ADLPC=0, ADHSC=1			400			
[L:] Supply Current	Stop, Reset, Module Off	I_{DDAD}	—	0.01	0.8	μA	—
ADC Asynchronous Clock Source	ADHSC=0	f_{ADACK}	—	10	—	MHz	$t_{ADACK} = 1/f_{ADACK}$
	ADHSC=1		—	20	—		
Sample Cycles	ADLSMP=0, ADSTS=00	Csamp	—	2	—	cycles	—
	ADLSMP=0, ADSTS=01			4			
	ADLSMP=0, ADSTS=10			6			
	ADLSMP=0, ADSTS=11			8			
	ADLSMP=1, ADSTS=00			12			
	ADLSMP=1, ADSTS=01			16			
	ADLSMP=1, ADSTS=10			20			
	ADLSMP=1, ADSTS=11			24			

Table 92. 12-bit ADC Characteristics (V_{REFH} = VDDA_ADC_3P3, V_{REFL} = V_{SSAD}) (continued)

Characteristic	Conditions[1]	Symbol	Min	Typ[2]	Max	Unit	Comment
Conversion Cycles	ADLSMP=0 ADSTS=00	Cconv	—	28	—	cycles	—
	ADLSMP=0 ADSTS=01			30			
	ADLSMP=0 ADSTS=10			32			
	ADLSMP=0 ADSTS=11			34			
	ADLSMP=1 ADSTS=00			38			
	ADLSMP=1 ADSTS=01			42			
	ADLSMP=1 ADSTS=10			46			
	ADLSMP=1, ADSTS=11			50			
Conversion Time	ADLSMP=0 ADSTS=00	Tconv	—	0.7	—	μs	Fadc=40 MHz
	ADLSMP=0 ADSTS=01			0.75			
	ADLSMP=0 ADSTS=10			0.8			
	ADLSMP=0 ADSTS=11			0.85			
	ADLSMP=1 ADSTS=00			0.95			
	ADLSMP=1 ADSTS=01			1.05			
	ADLSMP=1 ADSTS=10			1.15			
	ADLSMP=1, ADSTS=11			1.25			
[P:][C:] Total Unadjusted Error	12 bit mode	TUE	-2	—	+5	LSB 1 LSB = $(V_{REFH} - V_{REFL})/2N$	With Max Averaging
	10 bit mode		-0.5	—	+2		
	8 bit mode		-0.25	—	+1.5		
[P:][C:] Differential Non-Linearity	12 bit mode	DNL	—	±0.6	±2.5	LSB	Waiting for histogram method confirmation
	10bit mode		—	±0.5	±1		
	8 bit mode		—	±0.25	±0.5		
[P:][C:] Integral Non-Linearity	12 bit mode	INL	—	±2	±5	LSB	Waiting for histogram method confirmation
	10bit mode		—	±1	±2		
	8 bit mode		—	±0.5	±1		
Zero-Scale Error	12 bit mode	E_{ZS}	—	1	2	LSB	VADIN = V_{REFL} With Max Averaging
	10bit mode		—	0.5	1		
	8 bit mode		—	0.2	0.5		
Full-Scale Error	12 bit mode	E_{FS}	—	±2	+1/-6	LSB	VADIN = V_{REFH} With Max Averaging
	10bit mode		—	±0.5	±1/-2		
	8 bit mode		—	±0.25	±0.75		

Table 92. 12-bit ADC Characteristics (V_{REFH} = VDDA_ADC_3P3, V_{REFL} = V_{SSAD}) (continued)

Characteristic	Conditions[1]	Symbol	Min	Typ[2]	Max	Unit	Comment
[L:] Effective Number of Bits	12 bit mode	ENOB	10.1	10.7	—	Bits	Fin = 100Hz
[L:] Signal to Noise plus Distortion	See ENOB	SINAD	SINAD = 6.02 x ENOB + 1.76			dB	—

1 All accuracy numbers assume the ADC is calibrated with V_{REFH}=VDDA_ADC_3P3

2 Typical values assume VDDA_ADC_3P3 = 3.0 V, Temp = 25°C, F_{adck}=20 MHz unless otherwise stated. Typical values are for reference only and are not tested in production.

NOTE

The ADC electrical spec is met with the calibration enabled configuration.

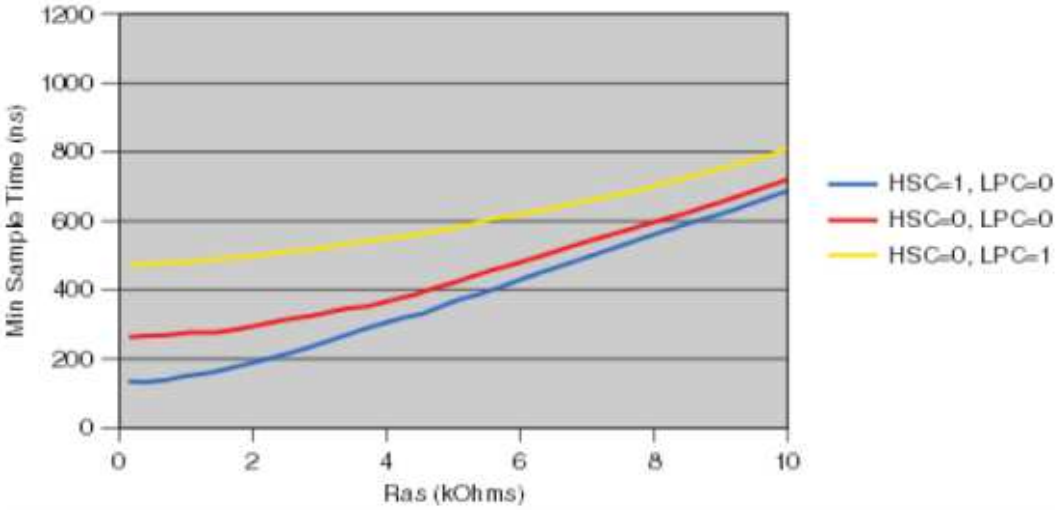

Figure 80. Minimum Sample Time versus Ras (Cas = 2pF)

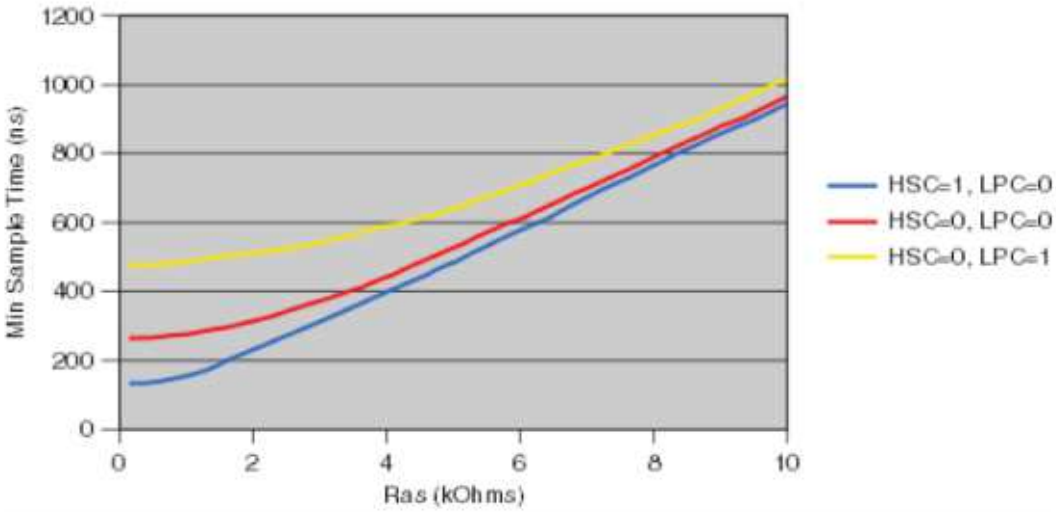

Figure 81. Minimum Sample Time versus Ras (Cas = 5pF)

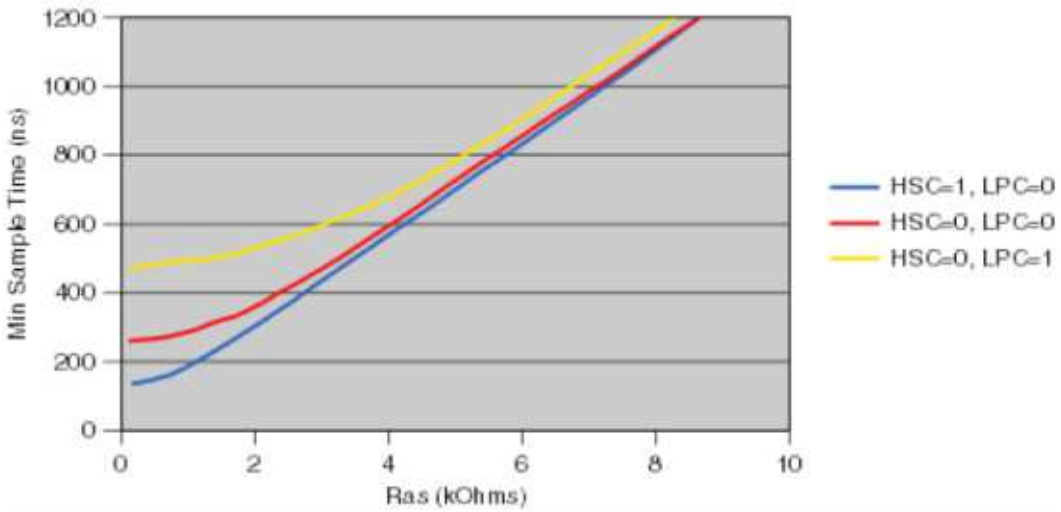

Figure 82. Minimum Sample Time versus Ras (Cas = 10pF)

5 Boot Mode Configuration

This section provides information on boot mode configuration pins allocation and boot devices interfaces allocation.

5.1 Boot Mode Configuration Pins

Table 93 provides boot options, functionality, fuse values, and associated pins. Several input pins are also sampled at reset and can be used to override fuse values, depending on the value of BT_FUSE_SEL fuse. The boot option pins are in effect when BT_FUSE_SEL fuse is ‘0’ (cleared, which is the case for an unblown fuse). For detailed boot mode options configured by the boot mode pins, see the i.MX 6SoloX Fuse Map chapter and the System Boot chapter in *i.MX 6SoloX Applications Processor Reference Manual* (IMX6SXRM).

Table 93. Fuses and Associated Pins Used for Boot

Pin	Direction at reset	eFuse name	State during reset (POR_B asserted)	State after reset (POR_B deasserted)	Details
BOOT_MODE0	Input	N/A	Hi-Z	Hi-Z	Boot mode selection
BOOT_MODE1	Input	N/A	Hi-Z	Hi-Z	Bootmode selection

Table 93. Fuses and Associated Pins Used for Boot (continued)

Pin	Direction at reset	eFuse name	State during reset (POR_B asserted)	State after reset (POR_B deasserted)	Details
LCD1_DATA00	Input	BT_CFG1[0]	100K Pull Down	Keeper	Boot Options, Pin value overrides fuse settings for BT_FUSE_SEL='0'. Signal Configuration as Fuse Override Input at Power Up. These are special I/O lines that control the boot up configuration during product development. In production, the boot configuration can be controlled by fuses.
LCD1_DATA01	Input	BT_CFG1[1]	100K Pull Down	Keeper	
LCD1_DATA02	Input	BT_CFG1[2]	100K Pull Down	Keeper	
LCD1_DATA03	Input	BT_CFG1[3]	100K Pull Down	Keeper	
LCD1_DATA04	Input	BT_CFG1[4]	100K Pull Down	Keeper	
LCD1_DATA05	Input	BT_CFG1[5]	100K Pull Down	Keeper	
LCD1_DATA06	Input	BT_CFG1[6]	100K Pull Down	Keeper	
LCD1_DATA07	Input	BT_CFG1[7]	100K Pull Down	Keeper	
LCD1_DATA08	Input	BT_CFG2[0]	100K Pull Down	Keeper	
LCD1_DATA09	Input	BT_CFG2[1]	100K Pull Down	Keeper	
LCD1_DATA10	Input	BT_CFG2[2]	100K Pull Down	Keeper	
LCD1_DATA11	Input	BT_CFG2[3]	100K Pull Down	Keeper	
LCD1_DATA12	Input	BT_CFG2[4]	100K Pull Down	Keeper	
LCD1_DATA13	Input	BT_CFG2[5]	100K Pull Down	Keeper	
LCD1_DATA14	Input	BT_CFG2[6]	100K Pull Down	Keeper	
LCD1_DATA15	Input	BT_CFG2[7]	100K Pull Down	Keeper	
LCD1_DATA16	Input	BT_CFG4[0]	100K Pull Down	Keeper	
LCD1_DATA17	Input	BT_CFG4[1]	100K Pull Down	Keeper	
LCD1_DATA18	Input	BT_CFG4[2]	100K Pull Down	Keeper	
LCD1_DATA19	Input	BT_CFG4[3]	100K Pull Down	Keeper	
LCD1_DATA20	Input	BT_CFG4[4]	100K Pull Down	Keeper	
LCD1_DATA21	Input	BT_CFG4[5]	100K Pull Down	Keeper	
LCD1_DATA22	Input	BT_CFG4[6]	100K Pull Down	Keeper	
LCD1_DATA23	Input	BT_CFG4[7]	100K Pull Down	Keeper	

5.2 Boot Device Interface Allocation

The tables below list the interfaces that can be used by the boot process in accordance with the specific boot mode configuration. The tables also describe the interface's specific modes and IOMUXC allocation, which are configured during boot when appropriate.

Table 94. QSPI Boot through QSPI1

Ball Name	Signal Name	Mux Mode	Common	Quad Mode	+ Port A DQS	+ Port A CS1	+ Port B	+ Port B DQS	+ Port B CS1
QSPI1A_SCLK	qspi1.A_SCLK	Alt0	Yes	Yes	—	—	—	—	—
QSPI1A_SS0_B	qspi1.A_SS0_B	Alt0	Yes	Yes	—	—	—	—	—
QSPI1A_DATA0	qspi1.A_DATA[0]	Alt0	Yes	Yes	—	—	—	—	—
QSPI1A_DATA1	qspi1.A_DATA[1]	Alt0	Yes	Yes	—	—	—	—	—
QSPI1A_DATA2	qspi1.A_DATA[2]	Alt0	Yes	Yes	—	—	—	—	—
QSPI1A_DATA3	qspi1.A_DATA[3]	Alt0	Yes	Yes	—	—	—	—	—
QSPI1B_DATA3	qspi1.B_DATA[3]	Alt0	—	—	—	—	Yes	—	—
QSPI1B_DATA2	qspi1.B_DATA[2]	Alt0	—	—	—	—	Yes	—	—
QSPI1B_DATA1	qspi1.B_DATA[1]	Alt0	—	—	—	—	Yes	—	—
QSPI1B_DATA0	qspi1.B_DATA[0]	Alt0	—	—	—	—	Yes	—	—
QSPI1B_SS0_B	qspi1.B_SS0_B	Alt0	—	—	—	—	Yes	—	—
QSPI1B_SCLK	qspi1.B_SCLK	Alt0	—	—	—	—	Yes	—	—
QSPI1A_SS1_B	qspi1.A_SS1_B	Alt0	—	—	—	Yes	—	—	—
QSPI1A_DQS	qspi1.A_DQS	Alt0	—	—	Yes	—	—	—	—
QSPI1B_SS1_B	qspi1.B_SS1_B	Alt0	—	—	—	—	—	—	Yes
QSPI1B_DQS	qspi1.B_DQS	Alt0	—	—	—	—	—	Yes	—

Table 95. QPSI Boot through QPSI2

Ball Name	Signal Name	Mux Mode	Common	Quad Mode	+ Port A DQS	+ Port A CS1	+ Port B	+ Port B DQS	+ Port B CS1
NAND_CLE	qspi2.A_SCLK	Alt2	Yes	Yes	—	—	—	—	—
NAND_ALE	qspi2.A_SS0_B	Alt2	Yes	Yes	—	—	—	—	—
NAND_WP_B	qspi2.A_DATA[0]	Alt2	Yes	Yes	—	—	—	—	—
NAND_READY_B	qspi2.A_DATA[1]	Alt2	Yes	Yes	—	—	—	—	—
NAND_CE0_B	qspi2.A_DATA[2]	Alt2	Yes	Yes	—	—	—	—	—
NAND_CE1_B	qspi2.A_DATA[3]	Alt2	Yes	Yes	—	—	—	—	—
NAND_RE_B	qspi2.B_DATA[3]	Alt2	—	—	—	—	Yes	—	—
NAND_WE_B	qspi2.B_DATA[2]	Alt2	—	—	—	—	Yes	—	—
NAND_DATA00	qspi2.B_DATA[1]	Alt2	—	—	—	—	Yes	—	—

Table 95. QPSI Boot through QPSI2 (continued)

Ball Name	Signal Name	Mux Mode	Common	Quad Mode	+ Port A DQS	+ Port A CS1	+ Port B	+ Port B DQS	+ Port B CS1
NAND_DATA01	qspi2.B_DATA[0]	Alt2	—	—	—	—	Yes	—	—
NAND_DATA03	qspi2.B_SS0_B	Alt2	—	—	—	—	Yes	—	—
NAND_DATA02	qspi2.B_SCLK	Alt2	—	—	—	—	Yes	—	—
NAND_DATA06	qspi2.A_SS1_B	Alt2	—	—	—	Yes	—	—	—
NAND_DATA07	qspi2.A_DQS	Alt2	—	—	Yes	—	—	—	—
NAND_DATA04	qspi2.B_SS1_B	Alt2	—	—	—	—	—	—	Yes
NAND_DATA05	qspi2.B_DQS	Alt2	—	—	—	—	—	Yes	—

Table 96. SPI Boot through ECSPI1

Ball Name	Signal Name	Mux Mode	Common	BOOT_CFG 4[5:4]=00b	BOOT_CFG 4[5:4]=01b	BOOT_CFG 4[5:4]=10b	BOOT_CFG 4[5:4]=11b
KEY_COL1	ecspi1.MISO	Alt 3	Yes	—	—	—	—
KEY_ROW0	ecspi1.MOSI	Alt 3	Yes	—	—	—	—
KEY_COL0 (SCLK)	ecspi1.SCLK	Alt 3	Yes	—	—	—	—
KEY_ROW1	ecspi1.SS0	Alt 3	—	Yes	—	—	—
KEY_ROW3	ecspi1.SS1	Alt 7	—	—	Yes	—	—
KEY_COL3	ecspi1.SS2	Alt 7	—	—	—	Yes	—
KEY_ROW2	ecspi1.SS3	Alt 7	—	—	—	—	Yes

Table 97. SPI Boot through ECSPI2

Ball Name	Signal Name	Mux Mode	Common	BOOT_CFG 4[5:4]=00b	BOOT_CFG 4[5:4]=01b	BOOT_CFG 4[5:4]=10b	BOOT_CFG 4[5:4]=11b
SD4_CLK	ecspi2.MISO	Alt 2	Yes	—	—	—	—
SD4_CMD	ecspi2.MOSI	Alt 2	Yes	—	—	—	—
SD4_DATA1	ecspi2.SCLK	Alt 2	Yes	—	—	—	—
SD4_DATA0	ecspi2.SS0	Alt 2	—	Yes	—	—	—
SD3_DATA0	ecspi2.SS1	Alt 2	—	—	Yes	—	—
SD3_DATA1	ecspi2.SS2	Alt 2	—	—	—	Yes	—
SD4_DATA2	ecspi2.SS3	Alt 6	—	—	—	—	Yes

Table 98. SPI Boot through ECSPI3

Ball Name	Signal Name	Mux Mode	Common	BOOT_CFG 4[5:4]=00b	BOOT_CFG 4[5:4]=01b	BOOT_CFG 4[5:4]=10b	BOOT_CFG 4[5:4]=11b
SD4_DATA6	ecspi3.MISO	Alt 3	Yes	—	—	—	—
SD4_DATA5	ecspi3.MOSI	Alt 3	Yes	—	—	—	—
SD4_DATA4	ecspi3.SCLK	Alt 3	Yes	—	—	—	—
SD4_DATA7	ecspi3.SS0	Alt 3	—	Yes	—	—	—
SD4_CMD	ecspi3.SS1	Alt 6	—	—	Yes	—	—
SD4_CLK	ecspi3.SS2	Alt 6	—	—	—	Yes	—
SD4_DATA0	ecspi3.SS3	Alt 6	—	—	—	—	Yes

Table 99. SPI Boot through ECSPI4

Ball Name	Signal Name	Mux Mode	Common	BOOT_CFG4 [5:4]=00b	BOOT_CFG4 [5:4]=01b	BOOT_CFG4 [5:4]=10b	BOOT_CFG4 [5:4]=11b
SD2_DATA3	ecspi4.MISO	Alt 3	Yes	—	—	—	—
SD2_CMD	ecspi4.MOSI	Alt 3	Yes	—	—	—	—
SD2_CLK	ecspi4.SCLK	Alt 3	Yes	—	—	—	—
SD2_DATA2	ecspi4.SS0	Alt 3	—	Yes	—	—	—
SD1_DATA3	ecspi4.SS1	Alt 6	—	—	Yes	—	—
SD2_DATA1	ecspi4.SS2	Alt 6	—	—	—	Yes	—
SD2_DATA0	ecspi4.SS3	Alt 6	—	—	—	—	Yes

Table 100. SPI Boot through ECSPI5

Ball Name	Signal Name	Mux Mode	Common	BOOT_CFG4 [5:4]=00b	BOOT_CFG4 [5:4]=01b	BOOT_CFG4[5:4]=10b	BOOT_CFG4 [5:4]=11b
QSPI1A_SS1_B	ecspi5.MISO	Alt 3	Yes	—	—	—	—
QSPI1A_DQS	ecspi5.MOSI	Alt 3	Yes	—	—	—	—
QSPI1B_SS1_B	ecspi5.SCLK	Alt 3	Yes	—	—	—	—
QSPI1B_DQS	ecspi5.SS0	Alt 3	—	Yes	—	—	—
QSPI1A_DATA2	ecspi5.SS1	Alt 2	—	—	Yes	—	—
QSPI1A_DATA3	ecspi5.SS2	Alt 2	—	—	—	Yes	—
QSPI1B_DATA3	ecspi5.SS3	Alt 2	—	—	—	—	Yes

Table 101. NAND Boot through GPMI

Ball Name	Signal Name	Mux Mode	Common	BOOT_CFG1[3:2]=01b	BOOT_CFG1[3:2]=10b
NAND_CLE	rawnand.CLE	Alt 0	Yes	—	—
NAND_ALE	rawnand.ALE	Alt 0	Yes	—	—
NAND_WP_B	rawnand.WP_B	Alt 0	Yes	—	—
NAND_READY_B	rawnand.READY_B	Alt 0	Yes	—	—
NAND_CE0_B	rawnand.CE0_B	Alt 0	Yes	—	—
NAND_CE1_B	rawnand.CE1_B	Alt 0	—	Yes	—
NAND_RE_B	rawnand.RE_B	Alt 0	Yes	—	—
NAND_WE_B	rawnand.WE_B	Alt 0	Yes	—	—
NAND_DATA00	rawnand.DATA00	Alt 0	Yes	—	—
NAND_DATA01	rawnand.DATA01	Alt 0	Yes	—	—
NAND_DATA02	rawnand.DATA02	Alt 0	Yes	—	—
NAND_DATA03	rawnand.DATA03	Alt 0	Yes	—	—
NAND_DATA04	rawnand.DATA04	Alt 0	Yes	—	—
NAND_DATA05	rawnand.DATA05	Alt 0	Yes	—	—
NAND_DATA06	rawnand.DATA06	Alt 0	Yes	—	—
NAND_DATA07	rawnand.DATA07	Alt 0	Yes	—	—
SD4_RESET_B	rawnand.DQS	Alt 1	Yes	—	—
SD4_DATA5	rawnand.CE2_B	Alt 1	—	—	Yes
SD4_DATA6	rawnand.CE3_B	Alt 1	—	—	Yes

Table 102. SD/MMC Boot through USDHC1

Ball Name	Signal Name	Mux Mode	Common	4-bit	8-bit	BOOT_CFG1[1]=1 (SD Power Cycle or SD boot with SDR50/SDR104)	SDMMC MFG Mode
GPIO1_IO02	usdhc1.CD_B	Alt 1	—	—	—	—	Yes
SD1_CLK	usdhc1.CLK	Alt 0	Yes	—	—	—	—
SD1_CMD	usdhc1.CMD	Alt 0	Yes	—	—	—	—
SD1_DATA0	usdhc1.DATA0	Alt 0	Yes	—	—	—	—
SD1_DATA1	usdhc1.DATA1	Alt 0	—	Yes	Yes	—	—
SD1_DATA2	usdhc1.DATA2	Alt 0	—	Yes	Yes	—	—
SD1_DATA3	usdhc1.DATA3	Alt 0	Yes	—	—	—	—
NAND_DATA00	usdhc1.DATA4	Alt 1	—	—	Yes	—	—
NAND_DATA01	usdhc1.DATA5	Alt 1	—	—	Yes	—	—

Table 102. SD/MMC Boot through USDHC1 (continued)

Ball Name	Signal Name	Mux Mode	Common	4-bit	8-bit	BOOT_CFG1[1]=1 (SD Power Cycle or SD boot with SDR50/SDR104)	SDMMC MFG Mode
NAND_DATA02	usdhc1.DATA6	Alt 1	—	—	Yes	—	—
NAND_DATA03	usdhc1.DATA7	Alt 1	—	—	Yes	—	—
NAND_WP_B	GPIO4_15	Alt 5	—	—	—	Yes	—
NAND_READY_B	usdhc1.VSELECT	Alt 1	—	—	—	Yes	—

Table 103. SD/MMC Boot through USDHC2

Ball Name	Signal Name	Mux Mode	Common	4-bit	8-bit	BOOT_CFG1[1]=1 (SD Power Cycle or SD boot with SDR50/SDR104)
SD2_CLK	usdhc2.CLK	Alt 0	Yes	—	—	—
SD2_CMD	usdhc2.CMD	Alt 0	Yes	—	—	—
SD2_DATA0	usdhc2.DATA0	Alt 0	Yes	—	—	—
SD2_DATA1	usdhc2.DATA1	Alt 0	—	Yes	Yes	—
SD2_DATA2	usdhc2.DATA2	Alt 0	—	Yes	Yes	—
SD2_DATA3	usdhc2.DATA3	Alt 0	Yes	—	—	—
NAND_DATA04	usdhc2.DATA4	Alt 1	—	—	Yes	—
NAND_DATA05	usdhc2.DATA5	Alt 1	—	—	Yes	—
NAND_DATA06	usdhc2.DATA6	Alt 1	—	—	Yes	—
NAND_DATA07	usdhc2.DATA7	Alt 1	—	—	Yes	—
NAND_RE_B	GPIO4_IO12	Alt 5	—	—	—	Yes
NAND_CE0_B	usdhc2.VSELECT	Alt 1	—	—	—	Yes

Table 104. SD/MMC Boot through USDHC3

Ball Name	Signal Name	Mux Mode	Common	4-bit	8-bit	BOOT_CFG1[1]=1 (SD Power Cycle or SD boot with SDR50/SDR104)
SD3_CLK	usdhc3.CLK	Alt 0	Yes	—	—	—
SD3_CMD	usdhc3.CMD	Alt 0	Yes	—	—	—
SD3_DATA0	usdhc3.DATA0	Alt 0	Yes	—	—	—
SD3_DATA1	usdhc3.DATA1	Alt 0	—	Yes	Yes	—
SD3_DATA2	usdhc3.DATA2	Alt 0	—	Yes	Yes	—

Table 104. SD/MMC Boot through USDHC3 (continued)

Ball Name	Signal Name	Mux Mode	Common	4-bit	8-bit	BOOT_CFG1[1]=1 (SD Power Cycle or SD boot with SDR50/SDR104)
SD3_DATA3	usdhc3.DATA3	Alt 0	Yes	—	—	—
SD3_DATA4	usdhc3.DATA4	Alt 0	—	—	Yes	—
SD3_DATA5	usdhc3.DATA5	Alt 0	—	—	Yes	—
SD3_DATA6	usdhc3.DATA6	Alt 0	—	—	Yes	—
SD3_DATA7	usdhc3.DATA7	Alt 0	—	—	Yes	—
KEY_COL1	GPIO2_IO11	Alt 5	—	—	—	Yes

Table 105. SD/MMC Boot through USDHC4

Ball Name	Signal Name	Mux Mode	Common	4-bit	8-bit	BOOT_CFG1[1]=1 (SD Power Cycle or SD boot with SDR50/SDR104)
SD4_CLK	usdhc4.CLK	Alt 0	Yes	—	—	—
SD4_CMD	usdhc4.CMD	Alt 0	Yes	—	—	—
SD4_DATA0	usdhc4.DATA0	Alt 0	Yes	—	—	—
SD4_DATA1	usdhc4.DATA1	Alt 0	—	Yes	Yes	—
SD4_DATA2	usdhc4.DATA2	Alt 0	—	Yes	Yes	—
SD4_DATA3	usdhc4.DATA3	Alt 0	Yes	—	—	—
SD4_DATA4	usdhc4.DATA4	Alt 0	—	—	Yes	—
SD4_DATA5	usdhc4.DATA5	Alt 0	—	—	Yes	—
SD4_DATA6	usdhc4.DATA6	Alt 0	—	—	Yes	—
SD4_DATA7	usdhc4.DATA7	Alt 0	—	—	Yes	—
SD4_RESET_B	GPIO6_IO22	Alt 5	—	—	—	Yes
KEY_ROW1	usdhc4.VSELECT	Alt 1	—	—	—	Yes

Table 106. NOR/OneNAND Boot through EIM

Ball Name	Signal Name	Mux Mode	Common	ADH16 Non-Mux	ADL16 Non-Mux	AD16 Mux
NAND_DATA00	weim.AD[0]	Alt 6	Yes	—	—	—
NAND_DATA01	weim.AD[1]	Alt 6	Yes	—	—	—
NAND_DATA02	weim.AD[2]	Alt 6	Yes	—	—	—
NAND_DATA03	weim.AD[3]	Alt 6	Yes	—	—	—
NAND_DATA04	weim.AD[4]	Alt 6	Yes	—	—	—

Table 106. NOR/OneNAND Boot through EIM (continued)

Ball Name	Signal Name	Mux Mode	Common	ADH16 Non-Mux	ADL16 Non-Mux	AD16 Mux
NAND_DATA05	weim.AD[5]	Alt 6	Yes	—	—	—
NAND_DATA06	weim.AD[6]	Alt 6	Yes	—	—	—
NAND_DATA07	weim.AD[7]	Alt 6	Yes	—	—	—
LCD1_DATA08	weim.AD[8]	Alt 1	Yes	—	—	—
LCD1_DATA09	weim.AD[9]	Alt 1	Yes	—	—	—
LCD1_DATA10	weim.AD[10]	Alt 1	Yes	—	—	—
LCD1_DATA11	weim.AD[11]	Alt 1	Yes	—	—	—
LCD1_DATA12	weim.AD[12]	Alt 1	Yes	—	—	—
LCD1_DATA13	weim.AD[13]	Alt 1	Yes	—	—	—
LCD1_DATA14	weim.AD[14]	Alt 1	Yes	—	—	—
LCD1_DATA15	weim.AD[15]	Alt 1	Yes	—	—	—
LCD1_DATA16	weim.ADDR[16]	Alt 1	—	Yes	Yes	Yes
LCD1_DATA17	weim.ADDR[17]	Alt 1	—	Yes	Yes	Yes
LCD1_DATA18	weim.ADDR[18]	Alt 1	—	Yes	Yes	Yes
LCD1_DATA19	weim.ADDR[19]	Alt 1	—	Yes	Yes	Yes
LCD1_DATA20	weim.ADDR[20]	Alt 1	—	Yes	Yes	Yes
LCD1_DATA21	weim.ADDR[21]	Alt 1	—	Yes	Yes	Yes
LCD1_DATA22	weim.ADDR[22]	Alt 1	—	Yes	Yes	Yes
LCD1_DATA23	weim.ADDR[23]	Alt 1	—	Yes	Yes	Yes
LCD1_DATA03	weim.ADDR[24]	Alt 1	—	Yes	Yes	Yes
LCD1_DATA04	weim.ADDR[25]	Alt 1	—	Yes	Yes	Yes
LCD1_DATA05	weim.ADDR[26]	Alt 1	—	Yes	Yes	Yes
NAND_ALE	weim.CS0_B	Alt 6	Yes	—	—	—
QSPI1A_SCLK	weim.DATA[0]	Alt 6	—	—	Yes	—
QSPI1A_SS0_B	weim.DATA[1]	Alt 6	—	—	Yes	—
QSPI1A_SS1_B	weim.DATA[2]	Alt 6	—	—	Yes	—
QSPI1A_DATA3	weim.DATA[3]	Alt 6	—	—	Yes	—
QSPI1A_DATA2	weim.DATA[4]	Alt 6	—	—	Yes	—
QSPI1A_DATA1	weim.DATA[5]	Alt 6	—	—	Yes	—
QSPI1A_DATA0	weim.DATA[6]	Alt 6	—	—	Yes	—
QSPI1A_DQS	weim.DATA[7]	Alt 6	—	—	Yes	—
QSPI1B_SCLK	weim.DATA[8]	Alt 6	—	—	Yes	—

Table 106. NOR/OneNAND Boot through EIM (continued)

Ball Name	Signal Name	Mux Mode	Common	ADH16 Non-Mux	ADL16 Non-Mux	AD16 Mux
QSPI1B_SS0_B	weim.DATA[9]	Alt 6	—	—	Yes	—
QSPI1B_SS1_B	weim.DATA[10]	Alt 6	—	—	Yes	—
QSPI1B_DATA3	weim.DATA[11]	Alt 6	—	—	Yes	—
QSPI1B_DATA2	weim.DATA[12]	Alt 6	—	—	Yes	—
QSPI1B_DATA1	weim.DATA[13]	Alt 6	—	—	Yes	—
QSPI1B_DATA0	weim.DATA[14]	Alt 6	—	—	Yes	—
QSPI1B_DQS	weim.DATA[15]	Alt 6	—	—	Yes	—
CSI_DATA07	weim.DATA[16]	Alt 6	—	Yes	—	—
CSI_DATA06	weim.DATA[17]	Alt 6	—	Yes	—	—
CSI_DATA05	weim.DATA[18]	Alt 6	—	Yes	—	—
CSI_DATA04	weim.DATA[19]	Alt 6	—	Yes	—	—
CSI_DATA03	weim.DATA[20]	Alt 6	—	Yes	—	—
CSI_DATA02	weim.DATA[21]	Alt 6	—	Yes	—	—
CSI_DATA01	weim.DATA[22]	Alt 6	—	Yes	—	—
CSI_DATA00	weim.DATA[23]	Alt 6	—	Yes	—	—
CSI_VSYNC	weim.DATA[24]	Alt 6	—	Yes	—	—
CSI_HSYNC	weim.DATA[25]	Alt 6	—	Yes	—	—
CSI_MCLK	weim.DATA[26]	Alt 6	—	Yes	—	—
CSI_PIXCLK	weim.DATA[27]	Alt 6	—	Yes	—	—
KEY_COL3	weim.DATA[28]	Alt 6	—	Yes	—	—
KEY_ROW2	weim.DATA[29]	Alt 6	—	Yes	—	—
KEY_COL2	weim.DATA[30]	Alt 6	—	Yes	—	—
KEY_ROW1	weim.DATA[31]	Alt 6	—	Yes	—	—
NAND_WP_B	weim.EB_B[0]	Alt 6	—	—	Yes	Yes
NAND_READY_B	weim.EB_B[1]	Alt 6	—	—	Yes	Yes
LCD1_DATA06	weim.EB_B[2]	Alt 1	—	Yes	—	—
LCD1_DATA07	weim.EB_B[3]	Alt 1	—	Yes	—	—
NAND_CE0_B	weim.LBA_B	Alt 6	Yes	—	—	—
NAND_CE1_B	weim.OE	Alt 6	Yes	—	—	—
NAND_RE_B	weim.RW	Alt 6	Yes	—	—	—

6 Package Information and Contact Assignments

This section includes the contact assignment information and mechanical package drawing.

6.1 i.MX 6SoloX Signal Availability by Package

The i.MX 6SoloX is available in multiple packages. Not all signals are available in all packages. Table 107 summarizes the signal differences and their implications. Signals available on all packages are not shown in this table. This table only shows signals impacted that are not available through another IOMUX option.

Table 107. i.MX 6SoloX Signal Availability by Package

Affected Module	Package				SoC Capability Implication
	19x19 mm [VM]	17x17 mm NP (no PCIe) [VO]	17x17 mm WP (with PCIe) [VN]	14x14 mm [VK]	
ADC	ADC1_IN0	ADC1_IN0	ADC1_IN0	ADC1_IN0	—
	ADC1_IN1	ADC1_IN1	ADC1_IN1	ADC1_IN1	—
	ADC1_IN2	ADC1_IN2	—	ADC1_IN2	—
	ADC1_IN3	ADC1_IN3	—	ADC1_IN3	—
	ADC2_IN0	ADC2_IN0	—	ADC2_IN0	—
	ADC2_IN1	ADC2_IN1	—	ADC2_IN1	—
	ADC2_IN2	ADC2_IN2	—	ADC2_IN2	—
	ADC2_IN3	ADC2_IN3	—	ADC2_IN3	—
	ADC_VREFL	ADC_VREFL	Tied internally to VSS	ADC_VREFL	17x17NP low reference voltage is not controllable.
	ADC_VREFH	ADC_VREFH	Tied internally to VDDA_ADC_3P3	ADC_VREFH	17x17NP high reference voltage is not controllable.
ECSPI4	ECSPI4_RDY	—	—	—	Master mode flow control cannot be used without ECSPI4_RDY
EIM	EIM_DATA[27:16]	—	—	—	Reduced EIM throughput on the smaller packages
ENET1	1588_EVENT1_IN	—	—	—	—
	1588_EVENT1_OUT	—	—	—	—
ENET2	1588_EVENT1_IN	—	—	—	—
	1588_EVENT1_OUT	—	—	—	—

Table 107. i.MX 6SoloX Signal Availability by Package (continued)

Affected Module	Package				SoC Capability Implication
	19x19 mm [VM]	17x17 mm NP (no PCIe) [VO]	17x17 mm WP (with PCIe) [VN]	14x14 mm [VK]	
GPIO	GPIO1_IO[21]	—	—	—	—
	GPIO1_IO[20]	—	—	—	—
	GPIO1_IO[19]	—	—	—	—
	GPIO1_IO[18]	—	—	—	—
	GPIO1_IO[17]	—	—	—	—
	GPIO1_IO[16]	—	—	—	—
	GPIO1_IO[15]	—	—	—	—
	GPIO1_IO[14]	—	—	—	—
	GPIO1_IO[25]	—	—	—	—
	GPIO1_IO[22]	—	—	—	—
	GPIO1_IO[23]	—	—	—	—
	GPIO1_IO[24]	—	—	—	—
	GPIO6_IO[2]	—	—	—	—
	GPIO6_IO[3]	—	—	—	—
	GPIO6_IO[1]	—	—	—	—
	GPIO6_IO[0]	—	—	—	—
	GPIO6_IO[4]	—	—	—	—
	GPIO6_IO[5]	—	—	—	—
GPT	GPT_CAPTURE1	—	—	—	—
	GPT_CAPTURE2	—	—	—	—
	GPT_COMPARE1	—	—	—	—
	GPT_CLK	—	—	—	—
	GPT_COMPARE2	—	—	—	—
	GPT_COMPARE3	—	—	—	—
	GPT_CAPTURE1	—	—	—	—
LVDS I/F	LVDS_CLK_N	—	—	—	—
	LVDS_CLK_P	—	—	—	—
	LVDS_DATA0_N	—	—	—	—
	LVDS_DATA0_P	—	—	—	—
	LVDS_DATA1_N	—	—	—	—
	LVDS_DATA1_P	—	—	—	—
	LVDS_DATA2_N	—	—	—	—
	LVDS_DATA2_P	—	—	—	—
	LVDS_DATA3_N	—	—	—	—
	LVDS_DATA3_P	—	—	—	—
	LVDS_CLK_N	—	—	—	—

Table 107. i.MX 6SoloX Signal Availability by Package (continued)

Affected Module	Package				SoC Capability Implication
	19x19 mm [VM]	17x17 mm NP (no PCIe) [VO]	17x17 mm WP (with PCIe) [VN]	14x14 mm [VK]	
MMDC	DRAM_ADDR15	—	—	—	Address space is limited to 2GB on the smaller packages vs.4 GB on the 19x19 package.
PCIe	PCIE_REXT	—	PCIE_REXT	—	—
	PCIE_RX_N	—	PCIE_RX_N	—	—
	PCIE_RX_P	—	PCIE_RX_P	—	—
	PCIE_TX_N	—	PCIE_TX_N	—	—
	PCIE_TX_P	—	PCIE_TX_P	—	—
	PCIE_VP	—	PCIE_VP	—	—
	—	PCIE_VP_CAP	—	PCIE_VP_CAP	—
	PCIE_VPH	—	PCIE_VPH	—	—
	PCIE_VPTX	—	PCIE_VPTX	—	—
UART6	UART6_DCD_B	—	—	—	—
	UART6_DTR_B	—	—	—	—
	UART6_DSR_B	—	—	—	—
	UART6_RI_B	—	—	—	—
uSDHC1	SD1_DATA0	—	—	—	Entire interface not available on the smaller packages
	SD1_DATA1	—	—	—	—
	SD1_CMD	—	—	—	—
	SD1_CLK	—	—	—	—
	SD1_DATA2	—	—	—	—
	SD1_DATA3	—	—	—	—

6.2 Signals with Different States During Reset and After Reset

For most of the signals, the state during reset is the same as the state after reset as listed in the "Out of Reset Condition" column of the Functional Contact Assignment tables for the various packages (Table 110, Table 114, Table 117, and Table 120). However, there are a few signals for which the state during reset is different from the state after reset. These signals along with their state during reset are given in Table 108.

Table 108. Signals with Different States During Reset and After Reset

Ball Name	State During Reset (POR_B Asserted)	
	Input/Output	Value
GPIO1_IO06	Output	Drive state unknown. This signal should not be used for system functions that will require it to be an input or stable output during reset.
GPIO1_IO09	Output	Drive state unknown. This signal should not be used for system functions that will require it to be an input or stable output during reset.

Table 108. Signals with Different States During Reset and After Reset (continued)

Ball Name	State During Reset (POR_B Asserted)	
	Input/Output	Value
RGMII2_TD3	Output	Drive state unknown. This signal should not be used for system functions that will require it to be an input or stable output during reset.
LCD1_DATA00	Input	BT_CFG[0] with 100K Pull Down
LCD1_DATA01	Input	BT_CFG[1] with 100K Pull Down
LCD1_DATA02	Input	BT_CFG[2] with 100K Pull Down
LCD1_DATA03	Input	BT_CFG[3] with 100K Pull Down
LCD1_DATA04	Input	BT_CFG[4] with 100K Pull Down
LCD1_DATA05	Input	BT_CFG[5] with 100K Pull Down
LCD1_DATA06	Input	BT_CFG[6] with 100K Pull Down
LCD1_DATA07	Input	BT_CFG[7] with 100K Pull Down
LCD1_DATA08	Input	BT_CFG[8] with 100K Pull Down
LCD1_DATA09	Input	BT_CFG[9] with 100K Pull Down
LCD1_DATA10	Input	BT_CFG[10] with 100K Pull Down
LCD1_DATA11	Input	BT_CFG[11] with 100K Pull Down
LCD1_DATA12	Input	BT_CFG[12] with 100K Pull Down
LCD1_DATA13	Input	BT_CFG[13] with 100K Pull Down
LCD1_DATA14	Input	BT_CFG[14] with 100K Pull Down
LCD1_DATA15	Input	BT_CFG[15] with 100K Pull Down
LCD1_DATA16	Input	BT_CFG[24] with 100K Pull Down
LCD1_DATA17	Input	BT_CFG[25] with 100K Pull Down
LCD1_DATA18	Input	BT_CFG[26] with 100K Pull Down
LCD1_DATA19	Input	BT_CFG[27] with 100K Pull Down
LCD1_DATA20	Input	BT_CFG[28] with 100K Pull Down
LCD1_DATA21	Input	BT_CFG[29] with 100K Pull Down
LCD1_DATA22	Input	BT_CFG[30] with 100K Pull Down
LCD1_DATA23	Input	BT_CFG[31] with 100K Pull Down

6.3 19x19 mm Package Information

6.3.1 19x19 mm, 0.8 mm Pitch, 23x23 Ball Matrix

Figure 83 shows the top, bottom, and side views of the 19×19 mm BGA package.

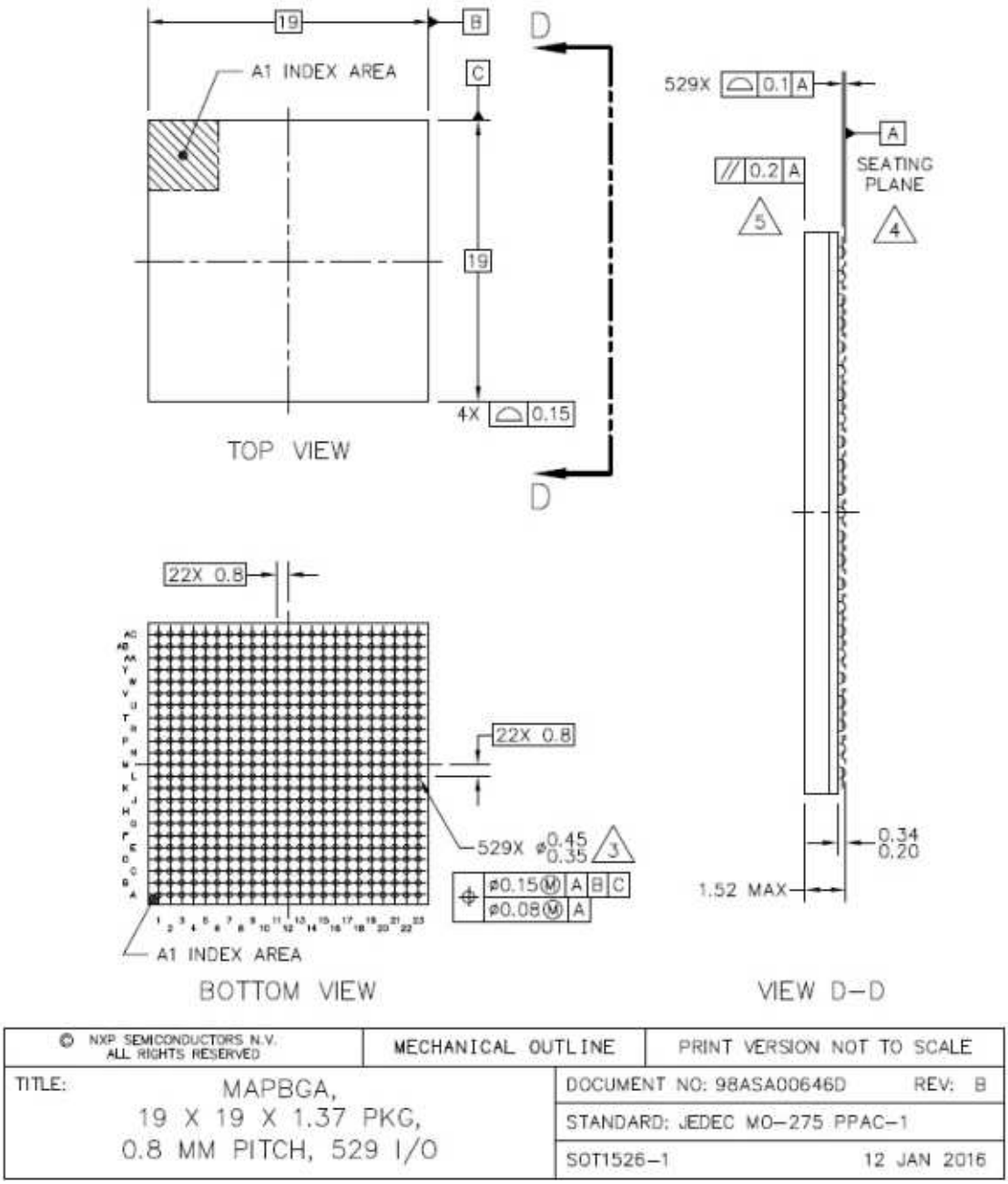

Figure 83. 19x19 mm BGA Package—Top, Bottom, and Side Views

NOTES:

1. ALL DIMENSIONS IN MILLIMETERS.
2. DIMENSIONING AND TOLERANCING PER ASME Y14.5M–1994.
3. MAXIMUM SOLDER BALL DIAMETER MEASURED PARALLEL TO DATUM A.
4. DATUM A, THE SEATING PLANE, IS DETERMINED BY THE SPHERICAL CROWNS OF THE SOLDER BALLS.
5. PARALLELISM MEASUREMENT SHALL EXCLUDE ANY EFFECT OF MARK ON TOP SURFACE OF PACKAGE.

© NXP SEMICONDUCTORS N.V. ALL RIGHTS RESERVED	MECHANICAL OUTLINE	PRINT VERSION NOT TO SCALE
TITLE: MAPBGA, 19 X 19 X 1.37 PKG, 0.8 MM PITCH, 529 I/O	DOCUMENT NO: 98ASA00646D	REV: B
	STANDARD: JEDEC MO–275 PPAC–1	
	SOT1526–1	12 JAN 2016

Figure 84. 19x19 mm BGA Package Notes

6.3.2 19x19 mm Supplies Contact Assignments and Functional Contact Assignments

Table 109 shows supplies contact assignments for the 19x19 mm package.

Table 109. 19x19 mm Supplies Contact Assignments

Supply Rail Name	19x19 Ball(s) Position(s)	Remark
ADC_VREFH	AA16	ADC high reference voltage
ADC_VREFL	U16	ADC low reference voltage
DRAM_VREF	M3	DDR voltage reference input. Connect to a voltage source that is 50% of NVCC_DRAM.
DRAM_ZQPAD	C4	DDR output buffer driver calibration reference voltage input. Connect DRAM_ZQPAD to an external 240 ohm 1% resistor to Vss.
GPANAIO	V18	Analog output for NXP use only. This output must always be left unconnected.
NGND_KEL0	R16	Connect to Vss
NVCC_CSI	P18	Supply input for the CSI interface
NVCC_DRAM	F5, G5, H5, J5, K5, L5, M5, N5, P5, R5, T5, U5, V5	Supply input for the DDR I/O interface
NVCC_DRAM_2P5	M6	Supply input for the DDR interface
NVCC_ENET	F6	Supply input for the ENET interfaces
NVCC_GPIO	G15	Supply input for the GPIO interface
NVCC_HIGH	U12	3.3 V Supply input for the dual-voltage I/Os on the SD3 interface
NVCC_JTAG	U11	Supply input for the JTAG interface
NVCC_KEY	G16	Supply input for the Key Pad Port (KPP) interface
NVCC_LCD1	G17	Supply input for the LCD interface
NVCC_LOW	V11	1.8 V Supply input for the dual-voltage IOs on the SD3 interface
NVCC_LVDS	T18	Supply input for the LVDS interface
NVCC_NAND	U8	Supply input for the Raw NAND flash memories interface
NVCC_PLL	Y23	Supply input for the PLLs
NVCC_QSPI	G14	Supply input for the QSPI interface
NVCC_RGMII1	F8	Supply input for the RGMII1 interface
NVCC_RGMII2	G9	Supply input for the RGMII2 interface
NVCC_SD1	G12	Supply input for the SD1 interface
NVCC_SD2	G11	Supply input for the SD2 interface
NVCC_SD4	U10	Supply input for the SD4 interface
NVCC_USB_H	AA6	Supply input for the USB HSIC interface
PCIE_REXT	M21	PCIe impedance calibration resistor. Connect PCIE_REXT to an external 200 ohm 1% resistor to Vss.
PCIE_VP	L18	Supply input for the PCIe PHY
PCIE_VPH	R18	Supply input for the PCIe PHY

Table 109. 19x19 mm Supplies Contact Assignments (continued)

Supply Rail Name	19x19 Ball(s) Position(s)	Remark
PCIE_VPTX	M18	Supply input for the PCIe PHY
RSVD	E5	Reserved. Do not connect.
USB_OTG1_VBUS	W20	VBUS input for USB_OTG1
USB_OTG2_VBUS	Y18	VBUS input for USB_OTG2
Reserved	K21	Reserved. Leave unconnected.
Reserved	L21	Reserved. Connect to ground through a 10 kΩ resistor.
Reserved	N18	Reserved. Connect to ground through a 10 kΩ resistor.
VDD_ARM_CAP	C18, J12, J13, J14, J15, J16, K16, L16, M16	Supply voltage output from internal LDO_ARM. Requires external capacitor(s).
VDD_ARM_IN	K12, K13, K14, K15, J21, L15, M15	Supply voltage input for internal LDO_ARM.
VDD_HIGH_CAP	U17, U18	Supply voltage output from internal LDO_2P5. Requires external capacitor(s).
VDD_HIGH_IN	U14, U15	Supply voltage input to internal LDO_2P5, LDO_1P1 and LDO_SNVS.
VDD_SNVS_CAP	Y22	Supply voltage output from internal LDO_SNVS. Requires external capacitor(s).
VDD_SNVS_IN	V15	Supply voltage input to the SNVS voltage domain
VDD_SOC_CAP	J7, J8, J9, J10, J11, K7, L7, M7, N7, N16, P7, P16, R7, R8, R9, R10, R11, R12, R13, R14, R15, Y10, AA10	Supply voltage output from internal LDO_SOC. Requires external capacitor(s).
VDD_SOC_IN	C9, K8, K9, K10, K11, L8, M8, N8, N15, P8, P9, P10, P11, P12, P13, P14, P15	Supply voltage input to internal LDO_SOC and LDO_PCIE
VDD_USB_CAP	AA17	Supply voltage output from internal LDO_USB. Requires external capacitor(s).
VDDA_ADC_3P3	U13	Supply voltage input to the ADC. This supply must be provided even if the ADC is not used.
VSS	A1, A6, A23, B3, B6, C2, C3, C5, D7, D9, D11, D13, D15, D17, D19, F2, F3, F20, G6, G7, G8, H6, H7, H8, H9, H10, H11, H12, H13, H14, H15, H16, H17, J2, J3, J6, J17, J20, K6, K17, L2, L3, L6, L9, L10, L11, L12, L13, L14, L17, M9, M10, M11, M12, M13, M14, M17, M20, M22, M23, N2, N3, N6, N9, N10, N11, N12, N13, N14, N17, P6, P17, R2, R3, R6, R17, R20, R21, R22, R23, T6, T7, T8, T9, T10, T11, T12, T13, T14, T15, T16, T17, U6, U7, U20, U21, V2, V3, V8, V9, W19, W21, W22, W23, Y7, Y11, Y13, Y15, Y17, Y20, AA2, AA3, AA5, AA18, AA20, AB3, AB6, AB19, AB21, AB23, AC1, AC6, AC19, AC21, AC23	Ground

Table 110 shows an alpha-sorted list of functional contact assignments for the 19x19 mm package.

Table 110. 19x19 mm Functional Contact Assignments

Ball Name	19x19 Ball	Power Group	Ball Type	Out of Reset Condition			
				Default Mode	Default Function	Input/ Output	Value
ADC1_IN0	AC15	VDDA_ADC_3P3	—	—	ADC1_IN0	Input	—
ADC1_IN1	AB15	VDDA_ADC_3P3	—	—	ADC1_IN1	Input	—
ADC1_IN2	AC16	VDDA_ADC_3P3	—	—	ADC1_IN2	Input	—
ADC1_IN3	AB16	VDDA_ADC_3P3	—	—	ADC1_IN3	Input	—
ADC2_IN0	AC17	VDDA_ADC_3P3	—	—	ADC2_IN0	Input	—
ADC2_IN1	AB17	VDDA_ADC_3P3	—	—	ADC2_IN1	Input	—
ADC2_IN2	AC18	VDDA_ADC_3P3	—	—	ADC2_IN2	Input	—
ADC2_IN3	AB18	VDDA_ADC_3P3	—	—	ADC2_IN3	Input	—
BOOT_MODE0	W14	VDD_SNVS_IN	GPIO	—	BOOT_MODE0	Input	100 kΩ pull-down
BOOT_MODE1	W15	VDD_SNVS_IN	GPIO	—	BOOT_MODE1	Input	100 kΩ pull-down
CCM_CLK1_N	AA22	VDD_HIGH_CAP	—	—	CCM_CLK1_N	—	—
CCM_CLK1_P	AA23	VDD_HIGH_CAP	—	—	CCM_CLK1_P	—	—
CCM_CLK2	W18	VDD_HIGH_CAP	—	—	CCM_CLK2	—	—
CCM_PMIC_STBY_REQ	V16	VDD_SNVS_IN	GPIO	—	CCM_PMIC_STBY_REQ	Output	0
CSI_DATA00	P21	NVCC_CSI	GPIO	ALT5	GPIO1_IO14	Input	Keeper
CSI_DATA01	P20	NVCC_CSI	GPIO	ALT5	GPIO1_IO15	Input	Keeper
CSI_DATA02	P19	NVCC_CSI	GPIO	ALT5	GPIO1_IO16	Input	Keeper
CSI_DATA03	N21	NVCC_CSI	GPIO	ALT5	GPIO1_IO17	Input	Keeper
CSI_DATA04	N19	NVCC_CSI	GPIO	ALT5	GPIO1_IO18	Input	Keeper
CSI_DATA05	N20	NVCC_CSI	GPIO	ALT5	GPIO1_IO19	Input	Keeper
CSI_DATA06	M19	NVCC_CSI	GPIO	ALT5	GPIO1_IO20	Input	Keeper
CSI_DATA07	L19	NVCC_CSI	GPIO	ALT5	GPIO1_IO21	Input	Keeper
CSI_HSYNC	L20	NVCC_CSI	GPIO	ALT5	GPIO1_IO22	Input	Keeper
CSI_MCLK	R19	NVCC_CSI	GPIO	ALT5	GPIO1_IO23	Input	Keeper
CSI_PIXCLK	T19	NVCC_CSI	GPIO	ALT5	GPIO1_IO24	Input	Keeper
CSI_VSYNC	U19	NVCC_CSI	GPIO	ALT5	GPIO1_IO25	Input	Keeper
DRAM_ADDR00	N4	NVCC_DRAM	DDR	—	DRAM_ADDR00	Output	100 kΩ pull-up
DRAM_ADDR01	Y4	NVCC_DRAM	DDR	—	DRAM_ADDR01	Output	100 kΩ pull-up

Table 110. 19x19 mm Functional Contact Assignments (continued)

Ball Name	19x19 Ball	Power Group	Ball Type	Out of Reset Condition			
				Default Mode	Default Function	Input/ Output	Value
DRAM_ADDR02	G4	NVCC_DRAM	DDR	—	DRAM_ADDR02	Output	100 kΩ pull-up
DRAM_ADDR03	H3	NVCC_DRAM	DDR	—	DRAM_ADDR03	Output	100 kΩ pull-up
DRAM_ADDR04	R4	NVCC_DRAM	DDR	—	DRAM_ADDR04	Output	100 kΩ pull-up
DRAM_ADDR05	G3	NVCC_DRAM	DDR	—	DRAM_ADDR05	Output	100 kΩ pull-up
DRAM_ADDR06	Y3	NVCC_DRAM	DDR	—	DRAM_ADDR06	Output	100 kΩ pull-up
DRAM_ADDR07	F4	NVCC_DRAM	DDR	—	DRAM_ADDR07	Output	100 kΩ pull-up
DRAM_ADDR08	T3	NVCC_DRAM	DDR	—	DRAM_ADDR08	Output	100 kΩ pull-up
DRAM_ADDR09	P3	NVCC_DRAM	DDR	—	DRAM_ADDR09	Output	100 kΩ pull-up
DRAM_ADDR10	U4	NVCC_DRAM	DDR	—	DRAM_ADDR10	Output	100 kΩ pull-up
DRAM_ADDR11	T4	NVCC_DRAM	DDR	—	DRAM_ADDR11	Output	100 kΩ pull-up
DRAM_ADDR12	W3	NVCC_DRAM	DDR	—	DRAM_ADDR12	Output	100 kΩ pull-up
DRAM_ADDR13	P4	NVCC_DRAM	DDR	—	DRAM_ADDR13	Output	100 kΩ pull-up
DRAM_ADDR14	W4	NVCC_DRAM	DDR	—	DRAM_ADDR14	Output	100 kΩ pull-up
DRAM_ADDR15	E4	NVCC_DRAM	DDR	—	DRAM_ADDR15	Output	100 kΩ pull-up
DRAM_CAS_B	K4	NVCC_DRAM	DDR	—	DRAM_CAS_B	Output	100 kΩ pull-up
DRAM_CS0_B	J4	NVCC_DRAM	DDR	—	DRAM_CS0_B	Output	100 kΩ pull-up
DRAM_CS1_B	D3	NVCC_DRAM	DDR	—	DRAM_CS1_B	Output	100 kΩ pull-up
DRAM_DATA00	U2	NVCC_DRAM	DDR	—	DRAM_DATA00	Input	100 kΩ pull-up
DRAM_DATA01	W2	NVCC_DRAM	DDR	—	DRAM_DATA01	Input	100 kΩ pull-up
DRAM_DATA02	V1	NVCC_DRAM	DDR	—	DRAM_DATA02	Input	100 kΩ pull-up

Table 110. 19x19 mm Functional Contact Assignments (continued)

Ball Name	19x19 Ball	Power Group	Ball Type	Out of Reset Condition			
				Default Mode	Default Function	Input/ Output	Value
DRAM_DATA03	W1	NVCC_DRAM	DDR	—	DRAM_DATA03	Input	100 kΩ pull-up
DRAM_DATA04	P1	NVCC_DRAM	DDR	—	DRAM_DATA04	Input	100 kΩ pull-up
DRAM_DATA05	N1	NVCC_DRAM	DDR	—	DRAM_DATA05	Input	100 kΩ pull-up
DRAM_DATA06	R1	NVCC_DRAM	DDR	—	DRAM_DATA06	Input	100 kΩ pull-up
DRAM_DATA07	P2	NVCC_DRAM	DDR	—	DRAM_DATA07	Input	100 kΩ pull-up
DRAM_DATA08	J1	NVCC_DRAM	DDR	—	DRAM_DATA08	Input	100 kΩ pull-up
DRAM_DATA09	L1	NVCC_DRAM	DDR	—	DRAM_DATA09	Input	100 kΩ pull-up
DRAM_DATA10	K2	NVCC_DRAM	DDR	—	DRAM_DATA10	Input	100 kΩ pull-up
DRAM_DATA11	G2	NVCC_DRAM	DDR	—	DRAM_DATA11	Input	100 kΩ pull-up
DRAM_DATA12	K1	NVCC_DRAM	DDR	—	DRAM_DATA12	Input	100 kΩ pull-up
DRAM_DATA13	F1	NVCC_DRAM	DDR	—	DRAM_DATA13	Input	100 kΩ pull-up
DRAM_DATA14	E2	NVCC_DRAM	DDR	—	DRAM_DATA14	Input	100 kΩ pull-up
DRAM_DATA15	E1	NVCC_DRAM	DDR	—	DRAM_DATA15	Input	100 kΩ pull-up
DRAM_DATA16	AB1	NVCC_DRAM	DDR	—	DRAM_DATA16	Input	100 kΩ pull-up
DRAM_DATA17	AB5	NVCC_DRAM	DDR	—	DRAM_DATA17	Input	100 kΩ pull-up
DRAM_DATA18	AC5	NVCC_DRAM	DDR	—	DRAM_DATA18	Input	100 kΩ pull-up
DRAM_DATA19	AB4	NVCC_DRAM	DDR	—	DRAM_DATA19	Input	100 kΩ pull-up
DRAM_DATA20	Y2	NVCC_DRAM	DDR	—	DRAM_DATA20	Input	100 kΩ pull-up
DRAM_DATA21	AC3	NVCC_DRAM	DDR	—	DRAM_DATA21	Input	100 kΩ pull-up
DRAM_DATA22	AA1	NVCC_DRAM	DDR	—	DRAM_DATA22	Input	100 kΩ pull-up

Table 110. 19x19 mm Functional Contact Assignments (continued)

Ball Name	19x19 Ball	Power Group	Ball Type	Out of Reset Condition			
				Default Mode	Default Function	Input/ Output	Value
DRAM_DATA23	Y1	NVCC_DRAM	DDR	—	DRAM_DATA23	Input	100 kΩ pull-up
DRAM_DATA24	B4	NVCC_DRAM	DDR	—	DRAM_DATA24	Input	100 kΩ pull-up
DRAM_DATA25	D1	NVCC_DRAM	DDR	—	DRAM_DATA25	Input	100 kΩ pull-up
DRAM_DATA26	B2	NVCC_DRAM	DDR	—	DRAM_DATA26	Input	100 kΩ pull-up
DRAM_DATA27	D2	NVCC_DRAM	DDR	—	DRAM_DATA27	Input	100 kΩ pull-up
DRAM_DATA28	B1	NVCC_DRAM	DDR	—	DRAM_DATA28	Input	100 kΩ pull-up
DRAM_DATA29	A4	NVCC_DRAM	DDR	—	DRAM_DATA29	Input	100 kΩ pull-up
DRAM_DATA30	B5	NVCC_DRAM	DDR	—	DRAM_DATA30	Input	100 kΩ pull-up
DRAM_DATA31	A5	NVCC_DRAM	DDR	—	DRAM_DATA31	Input	100 kΩ pull-up
DRAM_DQM0	T2	NVCC_DRAM	DDR	—	DRAM_DQM0	Output	100 kΩ pull-up
DRAM_DQM1	G1	NVCC_DRAM	DDR	—	DRAM_DQM1	Output	100 kΩ pull-up
DRAM_DQM2	AC4	NVCC_DRAM	DDR	—	DRAM_DQM2	Output	100 kΩ pull-up
DRAM_DQM3	C1	NVCC_DRAM	DDR	—	DRAM_DQM3	Output	100 kΩ pull-up
DRAM_ODT0	AA4	NVCC_DRAM	DDR	—	DRAM_ODT0	Output	100 kΩ pull-down
DRAM_RAS_B	L4	NVCC_DRAM	DDR	—	DRAM_RAS_B	Output	100 kΩ pull-up
DRAM_RESET	D4	NVCC_DRAM	DDR	—	DRAM_RESET	Output	100 kΩ pull-down
DRAM_SDBA0	H4	NVCC_DRAM	DDR	—	DRAM_SDBA0	Output	100 kΩ pull-up
DRAM_SDBA1	U3	NVCC_DRAM	DDR	—	DRAM_SDBA1	Output	100 kΩ pull-up
DRAM_SDBA2	M4	NVCC_DRAM	DDR	—	DRAM_SDBA2	Output	100 kΩ pull-up
DRAM_SDCKE0	V4	NVCC_DRAM	DDR	—	DRAM_SDCKE0	Output	100 kΩ pull-down

Table 110. 19x19 mm Functional Contact Assignments (continued)

Ball Name	19x19 Ball	Power Group	Ball Type	Out of Reset Condition			
				Default Mode	Default Function	Input/ Output	Value
DRAM_SDCKE1	E3	NVCC_DRAM	DDR	—	DRAM_SDCKE1	Output	100 kΩ pull-down
DRAM_SDCLK0_N	M1	NVCC_DRAM	DDRCLK	—	DRAM_SDCLK0_N	—	—
DRAM_SDCLK0_P	M2	NVCC_DRAM	DDRCLK	—	DRAM_SDCLK0_P	Output	Low
DRAM_SDQS0_N	U1	NVCC_DRAM	DDRCLK	—	DRAM_SDQS0_N	—	—
DRAM_SDQS0_P	T1	NVCC_DRAM	DDRCLK	—	DRAM_SDQS0_P	Input	—
DRAM_SDQS1_N	H2	NVCC_DRAM	DDRCLK	—	DRAM_SDQS1_N	—	—
DRAM_SDQS1_P	H1	NVCC_DRAM	DDRCLK	—	DRAM_SDQS1_P	Input	—
DRAM_SDQS2_N	AC2	NVCC_DRAM	DDRCLK	—	DRAM_SDQS2_N	—	—
DRAM_SDQS2_P	AB2	NVCC_DRAM	DDRCLK	—	DRAM_SDQS2_P	Input	—
DRAM_SDQS3_N	A2	NVCC_DRAM	DDRCLK	—	DRAM_SDQS3_N	—	—
DRAM_SDQS3_P	A3	NVCC_DRAM	DDRCLK	—	DRAM_SDQS3_P	Input	—
DRAM_SDWE_B	K3	NVCC_DRAM	DDR	—	DRAM_SDWE_B	Output	100 kΩ pull-up
ENET1_COL	E6	NVCC_ENET	GPIO	ALT5	GPIO2_IO00	Input	Keeper
ENET1_CRS	C7	NVCC_ENET	GPIO	ALT5	GPIO2_IO01	Input	Keeper
ENET1_MDC	F9	NVCC_ENET	GPIO	ALT5	GPIO2_IO02	Input	Keeper
ENET1_MDIO	E7	NVCC_ENET	GPIO	ALT5	GPIO2_IO03	Input	Keeper
ENET1_RX_CLK	B7	NVCC_ENET	GPIO	ALT5	GPIO2_IO04	Input	Keeper
ENET1_TX_CLK	A7	NVCC_ENET	GPIO	ALT5	GPIO2_IO05	Input	Keeper
ENET2_COL	F7	NVCC_ENET	GPIO	ALT5	GPIO2_IO06	Input	Keeper
ENET2_CRS	D6	NVCC_ENET	GPIO	ALT5	GPIO2_IO07	Input	Keeper
ENET2_RX_CLK	D5	NVCC_ENET	GPIO	ALT5	GPIO2_IO08	Input	Keeper
ENET2_TX_CLK	C6	NVCC_ENET	GPIO	ALT5	GPIO2_IO09	Input	Keeper
GPIO1_IO00	A20	NVCC_GPIO	GPIO	ALT5	GPIO1_IO00	Input	Keeper
GPIO1_IO01	B20	NVCC_GPIO	GPIO	ALT5	GPIO1_IO01	Input	Keeper
GPIO1_IO02	C20	NVCC_GPIO	GPIO	ALT5	GPIO1_IO02	Input	Keeper
GPIO1_IO03	D20	NVCC_GPIO	GPIO	ALT5	GPIO1_IO03	Input	Keeper
GPIO1_IO04	A19	NVCC_GPIO	GPIO	ALT5	GPIO1_IO04	Input	Keeper
GPIO1_IO05	B19	NVCC_GPIO	GPIO	ALT5	GPIO1_IO05	Input	Keeper
GPIO1_IO06	C19	NVCC_GPIO	GPIO	ALT5	GPIO1_IO06	Input	Keeper
GPIO1_IO07	A18	NVCC_GPIO	GPIO	ALT5	GPIO1_IO07	Input	Keeper
GPIO1_IO08	B18	NVCC_GPIO	GPIO	ALT5	GPIO1_IO08	Input	Keeper
GPIO1_IO09	D18	NVCC_GPIO	GPIO	ALT5	GPIO1_IO09	Input	Keeper

Table 110. 19x19 mm Functional Contact Assignments (continued)

Ball Name	19x19 Ball	Power Group	Ball Type	Out of Reset Condition			
				Default Mode	Default Function	Input/ Output	Value
GPIO1_IO10	E19	NVCC_GPIO	GPIO	ALT5	GPIO1_IO10	Input	Keeper
GPIO1_IO11	E18	NVCC_GPIO	GPIO	ALT5	GPIO1_IO11	Input	Keeper
GPIO1_IO12	A17	NVCC_GPIO	GPIO	ALT5	GPIO1_IO12	Input	Keeper
GPIO1_IO13	B17	NVCC_GPIO	GPIO	ALT5	GPIO1_IO13	Input	Keeper
JTAG_MOD	U9	NVCC_JTAG	GPIO	—	JTAG_MOD	Input	100 kΩ pull-up
JTAG_TCK	V10	NVCC_JTAG	GPIO	—	JTAG_TCK	Input	47 kΩ pull-up
JTAG_TDI	V12	NVCC_JTAG	GPIO	—	JTAG_TDI	Input	47 kΩ pull-up
JTAG_TDO	W9	NVCC_JTAG	GPIO	—	JTAG_TDO	Output	Keeper
JTAG_TMS	W12	NVCC_JTAG	GPIO	—	JTAG_TMS	Input	47 kΩ pull-up
JTAG_TRST_B	V13	NVCC_JTAG	GPIO	—	JTAG_TRST_B	Input	47 kΩ pull-up
KEY_COL0	C23	NVCC_KEY	GPIO	ALT5	GPIO2_IO10	Input	Keeper
KEY_COL1	C22	NVCC_KEY	GPIO	ALT5	GPIO2_IO11	Input	Keeper
KEY_COL2	B23	NVCC_KEY	GPIO	ALT5	GPIO2_IO12	Input	Keeper
KEY_COL3	B22	NVCC_KEY	GPIO	ALT5	GPIO2_IO13	Input	Keeper
KEY_COL4	A22	NVCC_KEY	GPIO	ALT5	GPIO2_IO14	Input	Keeper
KEY_ROW0	A21	NVCC_KEY	GPIO	ALT5	GPIO2_IO15	Input	Keeper
KEY_ROW1	B21	NVCC_KEY	GPIO	ALT5	GPIO2_IO16	Input	Keeper
KEY_ROW2	C21	NVCC_KEY	GPIO	ALT5	GPIO2_IO17	Input	Keeper
KEY_ROW3	D21	NVCC_KEY	GPIO	ALT5	GPIO2_IO18	Input	Keeper
KEY_ROW4	D22	NVCC_KEY	GPIO	ALT5	GPIO2_IO19	Input	Keeper
LCD1_CLK	H21	NVCC_LCD1	GPIO	ALT5	GPIO3_IO00	Input	Keeper
LCD1_DATA00	J23	NVCC_LCD1	GPIO	ALT5	GPIO3_IO01	Input	Keeper
LCD1_DATA01	J22	NVCC_LCD1	GPIO	ALT5	GPIO3_IO02	Input	Keeper
LCD1_DATA02	K20	NVCC_LCD1	GPIO	ALT5	GPIO3_IO03	Input	Keeper
LCD1_DATA03	K19	NVCC_LCD1	GPIO	ALT5	GPIO3_IO04	Input	Keeper
LCD1_DATA04	K18	NVCC_LCD1	GPIO	ALT5	GPIO3_IO05	Input	Keeper
LCD1_DATA05	J19	NVCC_LCD1	GPIO	ALT5	GPIO3_IO06	Input	Keeper
LCD1_DATA06	J18	NVCC_LCD1	GPIO	ALT5	GPIO3_IO07	Input	Keeper
LCD1_DATA07	H23	NVCC_LCD1	GPIO	ALT5	GPIO3_IO08	Input	Keeper
LCD1_DATA08	H22	NVCC_LCD1	GPIO	ALT5	GPIO3_IO09	Input	Keeper

Table 110. 19x19 mm Functional Contact Assignments (continued)

Ball Name	19x19 Ball	Power Group	Ball Type	Out of Reset Condition			
				Default Mode	Default Function	Input/ Output	Value
LCD1_DATA09	H20	NVCC_LCD1	GPIO	ALT5	GPIO3_IO10	Input	Keeper
LCD1_DATA10	H19	NVCC_LCD1	GPIO	ALT5	GPIO3_IO11	Input	Keeper
LCD1_DATA11	H18	NVCC_LCD1	GPIO	ALT5	GPIO3_IO12	Input	Keeper
LCD1_DATA12	G23	NVCC_LCD1	GPIO	ALT5	GPIO3_IO13	Input	Keeper
LCD1_DATA13	G22	NVCC_LCD1	GPIO	ALT5	GPIO3_IO14	Input	Keeper
LCD1_DATA14	G21	NVCC_LCD1	GPIO	ALT5	GPIO3_IO15	Input	Keeper
LCD1_DATA15	G19	NVCC_LCD1	GPIO	ALT5	GPIO3_IO16	Input	Keeper
LCD1_DATA16	G18	NVCC_LCD1	GPIO	ALT5	GPIO3_IO17	Input	Keeper
LCD1_DATA17	F23	NVCC_LCD1	GPIO	ALT5	GPIO3_IO18	Input	Keeper
LCD1_DATA18	F22	NVCC_LCD1	GPIO	ALT5	GPIO3_IO19	Input	Keeper
LCD1_DATA19	F21	NVCC_LCD1	GPIO	ALT5	GPIO3_IO20	Input	Keeper
LCD1_DATA20	G20	NVCC_LCD1	GPIO	ALT5	GPIO3_IO21	Input	Keeper
LCD1_DATA21	F19	NVCC_LCD1	GPIO	ALT5	GPIO3_IO22	Input	Keeper
LCD1_DATA22	F18	NVCC_LCD1	GPIO	ALT5	GPIO3_IO23	Input	Keeper
LCD1_DATA23	E20	NVCC_LCD1	GPIO	ALT5	GPIO3_IO24	Input	Keeper
LCD1_ENABLE	E21	NVCC_LCD1	GPIO	ALT5	GPIO3_IO25	Input	Keeper
LCD1_HSYNC	D23	NVCC_LCD1	GPIO	ALT5	GPIO3_IO26	Input	Keeper
LCD1_RESET	E22	NVCC_LCD1	GPIO	ALT5	GPIO3_IO27	Input	Keeper
LCD1_VSYNC	E23	NVCC_LCD1	GPIO	ALT5	GPIO3_IO28	Input	Keeper
LVDS_CLK_N	T20	NVCC_LVDS	LVDS	—	LVDS_CLK_N	—	—
LVDS_CLK_P	T21	NVCC_LVDS	LVDS	ALT0	LVDS_CLK_P	Input	—
LVDS_DATA0_N	V22	NVCC_LVDS	LVDS	—	LVDS_DATA0_N	—	—
LVDS_DATA0_P	V23	NVCC_LVDS	LVDS	ALT0	LVDS_DATA0_P	Input	—
LVDS_DATA1_N	V20	NVCC_LVDS	LVDS	—	LVDS_DATA1_N	—	—
LVDS_DATA1_P	V21	NVCC_LVDS	LVDS	ALT0	LVDS_DATA1_P	Input	—
LVDS_DATA2_N	U22	NVCC_LVDS	LVDS	—	LVDS_DATA2_N	—	—
LVDS_DATA2_P	U23	NVCC_LVDS	LVDS	ALT0	LVDS_DATA2_P	Input	—
LVDS_DATA3_N	T22	NVCC_LVDS	LVDS	—	LVDS_DATA3_N	—	—
LVDS_DATA3_P	T23	NVCC_LVDS	LVDS	ALT0	LVDS_DATA3_P	Input	—
NAND_ALE	AB7	NVCC_NAND	GPIO	ALT5	GPIO4_IO00	Input	Keeper
NAND_CE0_B	AB8	NVCC_NAND	GPIO	ALT5	GPIO4_IO01	Input	Keeper
NAND_CE1_B	AC9	NVCC_NAND	GPIO	ALT5	GPIO4_IO02	Input	Keeper
NAND_CLE	AB9	NVCC_NAND	GPIO	ALT5	GPIO4_IO03	Input	Keeper

Table 110. 19x19 mm Functional Contact Assignments (continued)

Ball Name	19x19 Ball	Power Group	Ball Type	Out of Reset Condition			
				Default Mode	Default Function	Input/ Output	Value
NAND_DATA00	V7	NVCC_NAND	GPIO	ALT5	GPIO4_IO04	Input	Keeper
NAND_DATA01	AA8	NVCC_NAND	GPIO	ALT5	GPIO4_IO05	Input	Keeper
NAND_DATA02	W8	NVCC_NAND	GPIO	ALT5	GPIO4_IO06	Input	Keeper
NAND_DATA03	V6	NVCC_NAND	GPIO	ALT5	GPIO4_IO07	Input	Keeper
NAND_DATA04	W7	NVCC_NAND	GPIO	ALT5	GPIO4_IO08	Input	Keeper
NAND_DATA05	W5	NVCC_NAND	GPIO	ALT5	GPIO4_IO09	Input	Keeper
NAND_DATA06	Y8	NVCC_NAND	GPIO	ALT5	GPIO4_IO10	Input	Keeper
NAND_DATA07	W6	NVCC_NAND	GPIO	ALT5	GPIO4_IO11	Input	Keeper
NAND_RE_B	AA9	NVCC_NAND	GPIO	ALT5	GPIO4_IO12	Input	Keeper
NAND_READY_B	AC7	NVCC_NAND	GPIO	ALT5	GPIO4_IO13	Input	Keeper
NAND_WE_B	AA7	NVCC_NAND	GPIO	ALT5	GPIO4_IO14	Input	Keeper
NAND_WP_B	AC8	NVCC_NAND	GPIO	ALT5	GPIO4_IO15	Input	Keeper
ONOFF	W17	VDD_SNVS_IN	GPIO	—	ONOFF	Input	100 kΩ pull-up
PCIE_RX_N	N22	PCIE_VPH	—	—	PCIE_RX_N	—	—
PCIE_RX_P	N23	PCIE_VPH	—	—	PCIE_RX_P	—	—
PCIE_TX_N	P22	PCIE_VPH	—	—	PCIE_TX_N	—	—
PCIE_TX_P	P23	PCIE_VPH	—	—	PCIE_TX_P	—	—
POR_B	V17	VDD_SNVS_IN	GPIO	—	POR_B	Input	100 kΩ pull-up
QSPI1A_DATA0	C16	NVCC_QSPI	GPIO	ALT5	GPIO4_IO16	Input	Keeper
QSPI1A_DATA1	E16	NVCC_QSPI	GPIO	ALT5	GPIO4_IO17	Input	Keeper
QSPI1A_DATA2	D16	NVCC_QSPI	GPIO	ALT5	GPIO4_IO18	Input	Keeper
QSPI1A_DATA3	C17	NVCC_QSPI	GPIO	ALT5	GPIO4_IO19	Input	Keeper
QSPI1A_DQS	E13	NVCC_QSPI	GPIO	ALT5	GPIO4_IO20	Input	Keeper
QSPI1A_SCLK	E17	NVCC_QSPI	GPIO	ALT5	GPIO4_IO21	Input	Keeper
QSPI1A_SS0_B	F16	NVCC_QSPI	GPIO	ALT5	GPIO4_IO22	Input	Keeper
QSPI1A_SS1_B	F17	NVCC_QSPI	GPIO	ALT5	GPIO4_IO23	Input	Keeper
QSPI1B_DATA0	C14	NVCC_QSPI	GPIO	ALT5	GPIO4_IO24	Input	Keeper
QSPI1B_DATA1	E14	NVCC_QSPI	GPIO	ALT5	GPIO4_IO25	Input	Keeper
QSPI1B_DATA2	D14	NVCC_QSPI	GPIO	ALT5	GPIO4_IO26	Input	Keeper
QSPI1B_DATA3	C15	NVCC_QSPI	GPIO	ALT5	GPIO4_IO27	Input	Keeper
QSPI1B_DQS	C13	NVCC_QSPI	GPIO	ALT5	GPIO4_IO28	Input	Keeper
QSPI1B_SCLK	E15	NVCC_QSPI	GPIO	ALT5	GPIO4_IO29	Input	Keeper

Table 110. 19x19 mm Functional Contact Assignments (continued)

Ball Name	19x19 Ball	Power Group	Ball Type	Out of Reset Condition			
				Default Mode	Default Function	Input/ Output	Value
QSPI1B_SS0_B	F14	NVCC_QSPI	GPIO	ALT5	GPIO4_IO30	Input	Keeper
QSPI1B_SS1_B	F15	NVCC_QSPI	GPIO	ALT5	GPIO4_IO31	Input	Keeper
RGMII1_RD0	D8	NVCC_RGMII1	GPIO	ALT5	GPIO5_IO00	Input	Keeper
RGMII1_RD1	E9	NVCC_RGMII1	GPIO	ALT5	GPIO5_IO01	Input	Keeper
RGMII1_RD2	C8	NVCC_RGMII1	GPIO	ALT5	GPIO5_IO02	Input	Keeper
RGMII1_RD3	E8	NVCC_RGMII1	GPIO	ALT5	GPIO5_IO03	Input	Keeper
RGMII1_RX_CTL	E10	NVCC_RGMII1	GPIO	ALT5	GPIO5_IO04	Input	Keeper
RGMII1_RXC	D10	NVCC_RGMII1	GPIO	ALT5	GPIO5_IO05	Input	Keeper
RGMII1_TD0	C12	NVCC_RGMII1	GPIO	ALT5	GPIO5_IO06	Input	Keeper
RGMII1_TD1	D12	NVCC_RGMII1	GPIO	ALT5	GPIO5_IO07	Input	Keeper
RGMII1_TD2	E12	NVCC_RGMII1	GPIO	ALT5	GPIO5_IO08	Input	Keeper
RGMII1_TD3	C11	NVCC_RGMII1	GPIO	ALT5	GPIO5_IO09	Input	Keeper
RGMII1_TX_CTL	C10	NVCC_RGMII1	GPIO	ALT5	GPIO5_IO10	Input	Keeper
RGMII1_TXC	E11	NVCC_RGMII1	GPIO	ALT5	GPIO5_IO11	Input	Keeper
RGMII2_RD0	A9	NVCC_RGMII2	GPIO	ALT5	GPIO5_IO12	Input	Keeper
RGMII2_RD1	B9	NVCC_RGMII2	GPIO	ALT5	GPIO5_IO13	Input	Keeper
RGMII2_RD2	A8	NVCC_RGMII2	GPIO	ALT5	GPIO5_IO14	Input	Keeper
RGMII2_RD3	B8	NVCC_RGMII2	GPIO	ALT5	GPIO5_IO15	Input	Keeper
RGMII2_RX_CTL	B10	NVCC_RGMII2	GPIO	ALT5	GPIO5_IO16	Input	Keeper
RGMII2_RXC	A10	NVCC_RGMII2	GPIO	ALT5	GPIO5_IO17	Input	Keeper
RGMII2_TD0	A12	NVCC_RGMII2	GPIO	ALT5	GPIO5_IO18	Input	Keeper
RGMII2_TD1	B12	NVCC_RGMII2	GPIO	ALT5	GPIO5_IO19	Input	Keeper
RGMII2_TD2	A13	NVCC_RGMII2	GPIO	ALT5	GPIO5_IO20	Input	Keeper
RGMII2_TD3	B13	NVCC_RGMII2	GPIO	ALT5	GPIO5_IO21	Input	Keeper
RGMII2_TX_CTL	B11	NVCC_RGMII2	GPIO	ALT5	GPIO5_IO22	Input	Keeper
RGMII2_TXC	A11	NVCC_RGMII2	GPIO	ALT5	GPIO5_IO23	Input	Keeper
RTC_XTALI	AB20	VDD_SNVS_CAP	—	—	RTC_XTALI	—	—
RTC_XTALO	AC20	VDD_SNVS_CAP	—	—	RTC_XTALO	—	—
SD1_CLK	A15	NVCC_SD1	GPIO	ALT5	GPIO6_IO00	Input	Keeper
SD1_CMD	B15	NVCC_SD1	GPIO	ALT5	GPIO6_IO01	Input	Keeper
SD1_DATA0	B16	NVCC_SD1	GPIO	ALT5	GPIO6_IO02	Input	Keeper
SD1_DATA1	A16	NVCC_SD1	GPIO	ALT5	GPIO6_IO03	Input	Keeper
SD1_DATA2	B14	NVCC_SD1	GPIO	ALT5	GPIO6_IO04	Input	Keeper

Table 110. 19x19 mm Functional Contact Assignments (continued)

Ball Name	19x19 Ball	Power Group	Ball Type	Out of Reset Condition			
				Default Mode	Default Function	Input/ Output	Value
SD1_DATA3	A14	NVCC_SD1	GPIO	ALT5	GPIO6_IO05	Input	Keeper
SD2_CLK	F12	NVCC_SD2	GPIO	ALT5	GPIO6_IO06	Input	Keeper
SD2_CMD	F11	NVCC_SD2	GPIO	ALT5	GPIO6_IO07	Input	Keeper
SD2_DATA0	G13	NVCC_SD2	GPIO	ALT5	GPIO6_IO08	Input	Keeper
SD2_DATA1	F13	NVCC_SD2	GPIO	ALT5	GPIO6_IO09	Input	Keeper
SD2_DATA2	F10	NVCC_SD2	GPIO	ALT5	GPIO6_IO10	Input	Keeper
SD2_DATA3	G10	NVCC_SD2	GPIO	ALT5	GPIO6_IO11	Input	Keeper
SD3_CLK	Y12	NVCC_LOW NVCC_HIGH	GPIO	ALT5	GPIO7_IO00	Input	100 kΩ pull-down
SD3_CMD	W13	NVCC_LOW NVCC_HIGH	GPIO	ALT5	GPIO7_IO01	Input	100 kΩ pull-down
SD3_DATA0	AA11	NVCC_LOW NVCC_HIGH	GPIO	ALT5	GPIO7_IO02	Input	100 kΩ pull-down
SD3_DATA1	W10	NVCC_LOW NVCC_HIGH	GPIO	ALT5	GPIO7_IO03	Input	100 kΩ pull-down
SD3_DATA2	AA15	NVCC_LOW NVCC_HIGH	GPIO	ALT5	GPIO7_IO04	Input	100 kΩ pull-down
SD3_DATA3	Y14	NVCC_LOW NVCC_HIGH	GPIO	ALT5	GPIO7_IO05	Input	100 kΩ pull-down
SD3_DATA4	AA14	NVCC_LOW NVCC_HIGH	GPIO	ALT5	GPIO7_IO06	Input	100 kΩ pull-down
SD3_DATA5	AA13	NVCC_LOW NVCC_HIGH	GPIO	ALT5	GPIO7_IO07	Input	100 kΩ pull-down
SD3_DATA6	AA12	NVCC_LOW NVCC_HIGH	GPIO	ALT5	GPIO7_IO08	Input	100 kΩ pull-down
SD3_DATA7	W11	NVCC_LOW NVCC_HIGH	GPIO	ALT5	GPIO7_IO09	Input	100 kΩ pull-down
SD4_CLK	AB12	NVCC_SD4	GPIO	ALT5	GPIO6_IO12	Input	Keeper
SD4_CMD	AB13	NVCC_SD4	GPIO	ALT5	GPIO6_IO13	Input	Keeper
SD4_DATA0	AC10	NVCC_SD4	GPIO	ALT5	GPIO6_IO14	Input	Keeper
SD4_DATA1	AB10	NVCC_SD4	GPIO	ALT5	GPIO6_IO15	Input	Keeper
SD4_DATA2	AC14	NVCC_SD4	GPIO	ALT5	GPIO6_IO16	Input	Keeper
SD4_DATA3	AB14	NVCC_SD4	GPIO	ALT5	GPIO6_IO17	Input	Keeper
SD4_DATA4	AC13	NVCC_SD4	GPIO	ALT5	GPIO6_IO18	Input	Keeper
SD4_DATA5	AC12	NVCC_SD4	GPIO	ALT5	GPIO6_IO19	Input	Keeper
SD4_DATA6	AC11	NVCC_SD4	GPIO	ALT5	GPIO6_IO20	Input	Keeper

Table 110. 19x19 mm Functional Contact Assignments (continued)

Ball Name	19x19 Ball	Power Group	Ball Type	Out of Reset Condition			
				Default Mode	Default Function	Input/ Output	Value
SD4_DATA7	AB11	NVCC_SD4	GPIO	ALT5	GPIO6_IO21	Input	Keeper
SD4_RESET_B	Y9	NVCC_SD4	GPIO	ALT5	GPIO6_IO22	Input	Keeper
SNVS_PMIC_ON_REQ[1]	W16	VDD_SNVS_IN	GPIO	—	SNVS_PMIC_ON_REQ	Output	100 kΩ pull-up
SNVS_TAMPER	V14	VDD_SNVS_IN	GPIO	—	SNVS_TAMPER	Input	100 kΩ pull-down
TEST_MODE	Y16	VDD_SNVS_IN	—	—	TEST_MODE	Input	100 kΩ pull-down
USB_H_DATA	Y5	NVCC_USB_H	GPIO	ALT5	GPIO7_IO10	Input	100 kΩ pull-down
USB_H_STROBE	Y6	NVCC_USB_H	GPIO	ALT5	GPIO7_IO11	Input	100 kΩ pull-down
USB_OTG1_CHD_B	V19	VDD_USB_CAP	—	—	USB_OTG1_CHD_B	—	—
USB_OTG1_DN	Y21	VDD_USB_CAP	—	—	USB_OTG1_DN	—	—
USB_OTG1_DP	AA21	VDD_USB_CAP	—	—	USB_OTG1_DP	—	—
USB_OTG2_DN	Y19	VDD_USB_CAP	—	—	USB_OTG2_DN	—	—
USB_OTG2_DP	AA19	VDD_USB_CAP	—	—	USB_OTG2_DP	—	—
Reserved	L23	—	—	—	—	—	—
Reserved	L22	—	—	—	—	—	—
Reserved	K23	—	—	—	—	—	—
Reserved	K22	—	—	—	—	—	—
XTALI	AB22	NVCC_PLL	—	—	XTALI	—	—
XTALO	AC22	NVCC_PLL	—	—	XTALO	—	—

[1] On silicon revisions prior to 1.2, the SNVS_PMIC_ON_REQ may briefly go low and then return high during POR. SNVS_PMIC_ON_REQ should be high during POR. An external 100k pull-up is required.

6.3.3 19x19 mm, 0.8 mm Pitch, 23x23 Ball Map

Table 111 shows the 19x19 mm, 0.8 mm pitch ball map for the i.MX 6SoloX.

Table 111. 19x19 mm, 0.8 mm Pitch, 23x23 Ball Map

	A	B	C	D	E	F	G	
1	VSS	DRAM_DATA28	DRAM_DQM3	DRAM_DATA25	DRAM_DATA15	DRAM_DATA13	DRAM_DQM1	1
2	DRAM_SDQS3_N	DRAM_DATA26	VSS	DRAM_DATA27	DRAM_DATA14	VSS	DRAM_DATA11	2
3	DRAM_SDQS3_P	VSS	VSS	DRAM_CS1_B	DRAM_SDCKE1	VSS	DRAM_ADDR05	3
4	DRAM_DATA29	DRAM_DATA24	DRAM_ZQPAD	DRAM_RESET	DRAM_ADDR15	DRAM_ADDR07	DRAM_ADDR02	4
5	DRAM_DATA31	DRAM_DATA30	VSS	ENET2_RX_CLK	RSVD	NVCC_DRAM	NVCC_DRAM	5
6	VSS	VSS	ENET2_TX_CLK	ENET2_CRS	ENET1_COL	NVCC_ENET	VSS	6
7	ENET1_TX_CLK	ENET1_RX_CLK	ENET1_CRS	VSS	ENET1_MDIO	ENET2_COL	VSS	7
8	RGMII2_RD2	RGMII2_RD3	RGMII1_RD2	RGMII1_RD0	RGMII1_RD3	NVCC_RGMII1	VSS	8
9	RGMII2_RD0	RGMII2_RD1	VDD_SOC_IN	VSS	RGMII1_RD1	ENET1_MDC	NVCC_RGMII2	9
10	RGMII2_RXC	RGMII2_RX_CTL	RGMII1_TX_CTL	RGMII1_RXC	RGMII1_RX_CTL	SD2_DATA2	SD2_DATA3	10
11	RGMII2_TXC	RGMII2_TX_CTL	RGMII1_TD3	VSS	RGMII1_TXC	SD2_CMD	NVCC_SD2	11
12	RGMII2_TD0	RGMII2_TD1	RGMII1_TD0	RGMII1_TD1	RGMII1_TD2	SD2_CLK	NVCC_SD1	12
13	RGMII2_TD2	RGMII2_TD3	QSPI1B_DQS	VSS	QSPI1A_DQS	SD2_DATA1	SD2_DATA0	13
14	SD1_DATA3	SD1_DATA2	QSPI1B_DATA0	QSPI1B_DATA2	QSPI1B_DATA1	QSPI1B_SS0_B	NVCC_QSPI	14
15	SD1_CLK	SD1_CMD	QSPI1B_DATA3	VSS	QSPI1B_SCLK	QSPI1B_SS1_B	NVCC_GPIO	15
16	SD1_DATA1	SD1_DATA0	QSPI1A_DATA0	QSPI1A_DATA2	QSPI1A_DATA1	QSPI1A_SS0_B	NVCC_KEY	16
17	GPIO1_IO12	GPIO1_IO13	QSPI1A_DATA3	VSS	QSPI1A_SCLK	QSPI1A_SS1_B	NVCC_LCD1	17
18	GPIO1_IO07	GPIO1_IO08	VDD_ARM_CAP	GPIO1_IO09	GPIO1_IO11	LCD1_DATA22	LCD1_DATA16	18
19	GPIO1_IO04	GPIO1_IO05	GPIO1_IO06	VSS	GPIO1_IO10	LCD1_DATA21	LCD1_DATA15	19
20	GPIO1_IO00	GPIO1_IO01	GPIO1_IO02	GPIO1_IO03	LCD1_DATA23	VSS	LCD1_DATA20	20
21	KEY_ROW0	KEY_ROW1	KEY_ROW2	KEY_ROW3	LCD1_ENABLE	LCD1_DATA19	LCD1_DATA14	21
22	KEY_COL4	KEY_COL3	KEY_COL1	KEY_ROW4	LCD1_RESET	LCD1_DATA18	LCD1_DATA13	22
23	VSS	KEY_COL2	KEY_COL0	LCD1_HSYNC	LCD1_VSYNC	LCD1_DATA17	LCD1_DATA12	23
	A	B	C	D	E	F	G	

Table 111. 19x19 mm, 0.8 mm Pitch, 23x23 Ball Map (continued)

P	N	M	L	K	J	H	
DRAM_DATA04	DRAM_DATA05	DRAM_SDCLK0_N	DRAM_DATA09	DRAM_DATA12	DRAM_DATA08	DRAM_SDQS1_P	**1**
DRAM_DATA07	VSS	DRAM_SDCLK0_P	VSS	DRAM_DATA10	VSS	DRAM_SDQS1_N	**2**
DRAM_ADDR09	VSS	DRAM_VREF	VSS	DRAM_SDWE_B	VSS	DRAM_ADDR03	**3**
DRAM_ADDR13	DRAM_ADDR00	DRAM_SDBA2	DRAM_RAS_B	DRAM_CAS_B	DRAM_CS0_B	DRAM_SDBA0	**4**
NVCC_DRAM	NVCC_DRAM	NVCC_DRAM	NVCC_DRAM	NVCC_DRAM	NVCC_DRAM	NVCC_DRAM	**5**
VSS	VSS	NVCC_DRAM_2P5	VSS	VSS	VSS	VSS	**6**
VDD_SOC_CAP	VDD_SOC_CAP	VDD_SOC_CAP	VDD_SOC_CAP	VDD_SOC_CAP	VDD_SOC_CAP	VSS	**7**
VDD_SOC_IN	VDD_SOC_IN	VDD_SOC_IN	VDD_SOC_IN	VDD_SOC_IN	VDD_SOC_CAP	VSS	**8**
VDD_SOC_IN	VSS	VSS	VSS	VDD_SOC_IN	VDD_SOC_CAP	VSS	**9**
VDD_SOC_IN	VSS	VSS	VSS	VDD_SOC_IN	VDD_SOC_CAP	VSS	**10**
VDD_SOC_IN	VSS	VSS	VSS	VDD_SOC_IN	VDD_SOC_CAP	VSS	**11**
VDD_SOC_IN	VSS	VSS	VSS	VDD_ARM_IN	VDD_ARM_CAP	VSS	**12**
VDD_SOC_IN	VSS	VSS	VSS	VDD_ARM_IN	VDD_ARM_CAP	VSS	**13**
VDD_SOC_IN	VSS	VSS	VSS	VDD_ARM_IN	VDD_ARM_CAP	VSS	**14**
VDD_SOC_IN	VDD_SOC_IN	VDD_ARM_IN	VDD_ARM_IN	VDD_ARM_IN	VDD_ARM_CAP	VSS	**15**
VDD_SOC_CAP	VDD_SOC_CAP	VDD_ARM_CAP	VDD_ARM_CAP	VDD_ARM_CAP	VDD_ARM_CAP	VSS	**16**
VSS	VSS	VSS	VSS	VSS	VSS	VSS	**17**
NVCC_CSI	RSVD	PCIE_VPTX	PCIE_VP	LCD1_DATA04	LCD1_DATA06	LCD1_DATA11	**18**
CSI_DATA02	CSI_DATA04	CSI_DATA06	CSI_DATA07	LCD1_DATA03	LCD1_DATA05	LCD1_DATA10	**19**
CSI_DATA01	CSI_DATA05	VSS	CSI_HSYNC	LCD1_DATA02	VSS	LCD1_DATA09	**20**
CSI_DATA00	CSI_DATA03	PCIE_REXT	RSVD	RSVD	VDD_ARM_IN	LCD1_CLK	**21**
PCIE_TX_N	PCIE_RX_N	VSS	RSVD	RSVD	LCD1_DATA01	LCD1_DATA08	**22**
PCIE_TX_P	PCIE_RX_P	VSS	RSVD	RSVD	LCD1_DATA00	LCD1_DATA07	**23**
P	**N**	**M**	**L**	**K**	**J**	**H**	

Table 111. 19x19 mm, 0.8 mm Pitch, 23x23 Ball Map (continued)

AA	Y	W	V	U	T	R	
DRAM_DATA22	DRAM_DATA23	DRAM_DATA03	DRAM_DATA02	DRAM_SDQS0_N	DRAM_SDQS0_P	DRAM_DATA06	**1**
VSS	DRAM_DATA20	DRAM_DATA01	VSS	DRAM_DATA00	DRAM_DQM0	VSS	**2**
VSS	DRAM_ADDR06	DRAM_ADDR12	VSS	DRAM_SDBA1	DRAM_ADDR08	VSS	**3**
DRAM_ODT0	DRAM_ADDR01	DRAM_ADDR14	DRAM_SDCKE0	DRAM_ADDR10	DRAM_ADDR11	DRAM_ADDR04	**4**
VSS	USB_H_DATA	NAND_DATA05	NVCC_DRAM	NVCC_DRAM	NVCC_DRAM	NVCC_DRAM	**5**
NVCC_USB_H	USB_H_STROBE	NAND_DATA07	NAND_DATA03	VSS	VSS	VSS	**6**
NAND_WE_B	VSS	NAND_DATA04	NAND_DATA00	VSS	VSS	VDD_SOC_CAP	**7**
NAND_DATA01	NAND_DATA06	NAND_DATA02	VSS	NVCC_NAND	VSS	VDD_SOC_CAP	**8**
NAND_RE_B	SD4_RESET_B	JTAG_TDO	VSS	JTAG_MOD	VSS	VDD_SOC_CAP	**9**
VDD_SOC_CAP	VDD_SOC_CAP	SD3_DATA1	JTAG_TCK	NVCC_SD4	VSS	VDD_SOC_CAP	**10**
SD3_DATA0	VSS	SD3_DATA7	NVCC_LOW	NVCC_JTAG	VSS	VDD_SOC_CAP	**11**
SD3_DATA6	SD3_CLK	JTAG_TMS	JTAG_TDI	NVCC_HIGH	VSS	VDD_SOC_CAP	**12**
SD3_DATA5	VSS	SD3_CMD	JTAG_TRST_B	VDDA_ADC_3P3	VSS	VDD_SOC_CAP	**13**
SD3_DATA4	SD3_DATA3	BOOT_MODE0	SNVS_TAMPER	VDD_HIGH_IN	VSS	VDD_SOC_CAP	**14**
SD3_DATA2	VSS	BOOT_MODE1	VDD_SNVS_IN	VDD_HIGH_IN	VSS	VDD_SOC_CAP	**15**
ADC_VREFH	TEST_MODE	SNVS_PMIC_ON_REQ	CCM_PMIC_STBY_REQ	ADC_VREFL	VSS	NGND_KEL0	**16**
VDD_USB_CAP	VSS	ONOFF	POR_B	VDD_HIGH_CAP	VSS	VSS	**17**
VSS	USB_OTG2_VBUS	CCM_CLK2	GPANAIO	VDD_HIGH_CAP	NVCC_LVDS	PCIE_VPH	**18**
USB_OTG2_DP	USB_OTG2_DN	VSS	USB_OTG1_CHD_B	CSI_VSYNC	CSI_PIXCLK	CSI_MCLK	**19**
VSS	VSS	USB_OTG1_VBUS	LVDS_DATA1_N	VSS	LVDS_CLK_N	VSS	**20**
USB_OTG1_DP	USB_OTG1_DN	VSS	LVDS_DATA1_P	VSS	LVDS_CLK_P	VSS	**21**
CCM_CLK1_N	VDD_SNVS_CAP	VSS	LVDS_DATA0_N	LVDS_DATA2_N	LVDS_DATA3_N	VSS	**22**
CCM_CLK1_P	NVCC_PLL	VSS	LVDS_DATA0_P	LVDS_DATA2_P	LVDS_DATA3_P	VSS	**23**
AA	**Y**	**W**	**V**	**U**	**T**	**R**	

Table 111. 19x19 mm, 0.8 mm Pitch, 23x23 Ball Map (continued)

	1	2	3	4	5	6	7	8	9	10	11	12	13	14	15	16	17	18	19	20	21	22	23	
AB	DRAM_DATA16	DRAM_SDQS2_P	VSS	DRAM_DATA19	DRAM_DATA17	VSS	NAND_ALE	NAND_CE0_B	NAND_CLE	SD4_DATA1	SD4_DATA7	SD4_CLK	SD4_CMD	SD4_DATA3	ADC1_IN1	ADC1_IN3	ADC2_IN1	ADC2_IN3	VSS	RTC_XTALI	VSS	XTALI	VSS	**AB**
AC	VSS	DRAM_SDQS2_N	DRAM_DATA21	DRAM_DQM2	DRAM_DATA18	VSS	NAND_READY_B	NAND_WP_B	NAND_CE1_B	SD4_DATA0	SD4_DATA6	SD4_DATA5	SD4_DATA4	SD4_DATA2	ADC1_IN0	ADC1_IN2	ADC2_IN0	ADC2_IN2	VSS	RTC_XTALO	VSS	XTALO	VSS	**AC**
	1	2	3	4	5	6	7	8	9	10	11	12	13	14	15	16	17	18	19	20	21	22	23	

6.4 17x17 mm Package Information

6.4.1 17x17 mm Package Comparison

The i.MX 6SoloX comes in two versions in a 17x17 mm package:

- The 17x17 NP (No PCIe) package does not support PCIe but supports an increased number of ADC input channels.
- The 17x17 WP (With PCIe) package supports PCIe with a reduced number of ADC input channels.

Note that the package pinouts have differences beyond the PCIe and ADC signals.

A summary of the difference between the two packages is shown in Table 112 below. All other signals have the same ball number on both 17x17 package versions.

Table 112. Pinout Differences Between 17x17 NP and 17x17 WP Packages

17x17 NP Package (No PCIe)	17x17 WP Package (With PCIe)	Ball Name
M18	L18	LCD1_DATA01
N19	M18	LCD1_DATA03
N20	N17	LCD1_DATA04
V15	U14	SD3_DATA2
U14	T14	SD3_DATA4
V16	Not in this package	ADC_VREFH[1]
R14	Not in this package	ADC_VREFL[1]
Y15	Not in this package	ADC1_IN2
W15	Not in this package	ADC1_IN3
Y16	Not in this package	ADC2_IN0

Table 112. Pinout Differences Between 17x17 NP and 17x17 WP Packages (continued)

17x17 NP Package (No PCIe)	17x17 WP Package (With PCIe)	Ball Name
W16	Not in this package	ADC2_IN1
T16	Not in this package	ADC2_IN2
U16	Not in this package	ADC2_IN3
N15	U20	BOOT_MODE0
P14	U19	BOOT_MODE1
P19	P16	CCM_CLK1_N
P20	R16	CCM_CLK1_P
T14	R15	CCM_CLK2
N16	P15	CCM_PMIC_STBY_REQ
T15	U16	GPANAIO
U18	W20	NVCC_PLL
R15	N15	ONOFF
Not in this package	N18	PCIE_REXT
Not in this package	P19	PCIE_RX_N
Not in this package	P20	PCIE_RX_P
Not in this package	R19	PCIE_TX_N
Not in this package	R20	PCIE_TX_P
Not in this package	P18	PCIE_VP
L18	Not in this package	PCIE_VP_CAP[2]
Not in this package	R18	PCIE_VPH
Not in this package	P17	PCIE_VPTX
R16	P14	POR_B
V19	W19	RTC_XTALI
V20	Y19	RTC_XTALO
P16	N16	SNVS_PMIC_ON_REQ
P15	R14	SNVS_TAMPER
W20	T17	USB_OTG1_CHD_B
W19	W17	USB_OTG1_DN
Y19	Y17	USB_OTG1_DP
T17	T16	USB_OTG1_VBUS
W17	W15	USB_OTG2_DN
Y17	Y15	USB_OTG2_DP

Table 112. Pinout Differences Between 17x17 NP and 17x17 WP Packages (continued)

17x17 NP Package (No PCIe)	17x17 WP Package (With PCIe)	Ball Name
U17	T15	USB_OTG2_VBUS
N17	V17	VDD_HIGH_CAP
N18	V18	VDD_HIGH_CAP
P17	U17	VDD_HIGH_IN
P18	U18	VDD_HIGH_IN
T18	V16	VDD_SNVS_CAP
R18	T18	VDD_SNVS_IN
V17	V15	VDD_USB_CAP
R19	N19	VSS
R20	N20	VSS
U19	T19	VSS
U20	T20	VSS
V18	Not in this package	VSS
Not in this package	W16	VSS
Not in this package	Y16	VSS
T19	V19	XTALI
T20	V20	XTALO

[1] In the 17x17 WP package, ADC_VREFL is connected internally to VSS. ADC_VREFH is connected internally to VDDA_ADC_3P3.

[2] In the 17x17 NP package, PCIE_VP_CAP must be connected to an external 4.7uF filter capacitor.

6.4.2 17x17 mm, 0.8 mm Pitch, 20x20 Ball Matrix

Figure 85 shows the top, bottom, and side views of the 17×17 mm BGA package.

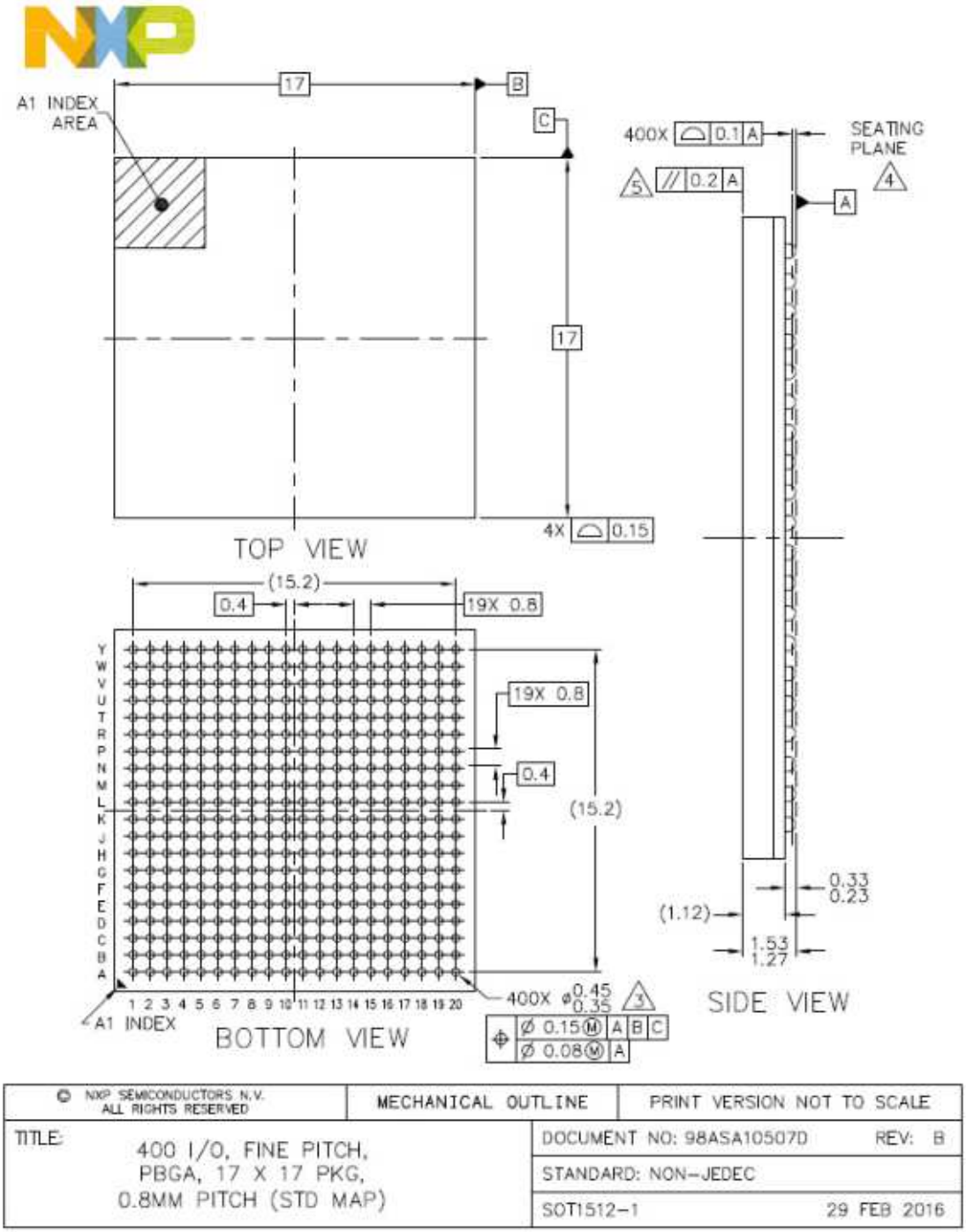

Figure 85. 17x17 mm BGA Package—Top, Bottom, and Side Views

NOTES:

1. ALL DIMENSIONS IN MILLIMETERS.
2. DIMENSIONING AND TOLERANCING PER ASME Y14.5M-1994.
3. MAXIMUM SOLDER BALL DIAMETER MEASURED PARALLEL TO DATUM A.
4. DATUM A, THE SEATING PLANE, IS DETERMINED BY THE SPHERICAL CROWNS OF THE SOLDER BALLS.
5. PARALLELISM MEASUREMENT SHALL EXCLUDE ANY EFFECT OF MARK ON TOP SURFACE OF PACKAGE.

© NXP SEMICONDUCTORS N.V. ALL RIGHTS RESERVED	MECHANICAL OUTLINE	PRINT VERSION NOT TO SCALE
TITLE: 400 I/O, FINE PITCH, PBGA, 17 X 17 PKG. 0.8MM PITCH (STD MAP)	DOCUMENT NO: 98ASA10507D	REV: B
	STANDARD: NON-JEDEC	
	SOT1512-1	29 FEB 2016

Figure 86. 17x17 mm BGA Package Notes

6.4.3 17x17 mm NP (No PCIe) Supplies Contact Assignments and Functional Contact Assignments

Table 113 shows supplies contact assignments for the 17x17 mm NP (No PCIe) package.

Table 113. 17x17 mm NP (no PCIe) Supplies Contact Assignments

Supply Rail Name	17x17 NP [No PCIe] Ball(s) Position(s)	Remark
ADC_VREFH	V16	ADC high reference voltage
ADC_VREFL	R14	ADC low reference voltage
DRAM_VREF	J3	DDR voltage reference input. Connect to a voltage source that is 50% of NVCC_DRAM.
DRAM_ZQPAD	C5	DDR output buffer driver calibration reference voltage input. Connect DRAM_ZQPAD to an external 240 ohm 1% resistor to Vss.
GPANAIO	T15	Analog output for NXP use only. This output must always be left unconnected.
NGND_KEL0	P13	Connect to Vss
NVCC_DRAM	G6, H6, J6, K6, L6, M6, N6, P6	Supply input for the DDR I/O interface
NVCC_DRAM_2P5	K7	Supply input for the DDR interface
NVCC_ENET	F6	Supply input for the ENET interfaces
NVCC_GPIO	F15	Supply input for the GPIO interface
NVCC_HIGH	R12	3.3 V Supply input for the dual-voltage I/Os on the SD3 interface
NVCC_JTAG	R11	Supply input for the JTAG interface
NVCC_KEY	G15	Supply input for the Key Pad Port (KPP) interface
NVCC_LCD1	H15	Supply input for the LCD interface
NVCC_LOW	V13	1.8 V Supply input for the dual-voltage I/Os on the SD3 interface
NVCC_NAND	R6	Supply input for the Raw NAND flash memories interface
NVCC_PLL	U18	Supply input for the PLLs
NVCC_QSPI	F14	Supply input for the QSPI interface
NVCC_RGMII1	F8	Supply input for the RGMII1 interface
NVCC_RGMII2	F9	Supply input for the RGMII2 interface
NVCC_SD2	F13	Supply input for the SD2 interface
NVCC_SD4	V10	Supply input for the SD4 interface
NVCC_USB_H	V5	Supply input for the USB HSIC interface
PCIE_VP_CAP	L18	PCIe LDO output
USB_OTG1_VBUS	T17	VBUS input for USB_OTG1

Table 113. 17x17 mm NP (no PCIe) Supplies Contact Assignments (continued)

Supply Rail Name	17x17 NP [No PCIe] Ball(s) Position(s)	Remark
USB_OTG2_VBUS	U17	VBUS input for USB_OTG2
VDD_ARM_CAP	C16, D16, H10, H11, H12, H13, J13, K13, L13	Supply voltage output from internal LDO_ARM. Requires external capacitor(s).
VDD_ARM_IN	H18, J10, J11, J12, K12, L12	Supply voltage input for internal LDO_ARM.
VDD_HIGH_CAP	N17, N18	Supply voltage output from internal LDO_2P5. Requires external capacitor(s).
VDD_HIGH_IN	P17, P18	Supply voltage input to internal LDO_2P5, LDO_1P1 and LDO_SNVS.
VDD_SNVS_CAP	T18	Supply voltage output from internal LDO_SNVS. Requires external capacitor(s).
VDD_SNVS_IN	R18	Supply voltage input to the SNVS voltage domain
VDD_SOC_CAP	H8, H9, J8, K8, L8, M8, M13, N8, N9, N10, N11, N12, V8	Supply voltage output from internal LDO_SOC. Requires external capacitor(s).
VDD_SOC_IN	C7, C8, J9, K9, L9, M9, M10, M11, M12	Supply voltage input to internal LDO_SOC and LDO_PCIE
VDD_USB_CAP	V17	Supply voltage output from internal LDO_USB. Requires external capacitor(s).
VDDA_ADC_3P3	R13	Supply voltage input to the ADC. This supply must be provided even if the ADC is not used.
VSS	A1, A20, C3, C4, C18, D6, D9, D12, D15, E3, F3, F5, F17, G7, G8, G9, G10, G11, G12, G13, G14, H3, H7, H14, J7, J14, J17, K3, K10, K11, K14, L3, L7, L10, L11, L14, M7, M14, M17, N3, N7, N13, P7, P8, P9, P10, P11, P12, R3, R5, R17, R19, R20, T3, U6, U9, U12, U15, U19, U20, V3, V4, V18, W18, Y1, Y18, Y20	Ground

Table 114 shows an alpha-sorted list of functional contact assignments for the 17x17 mm NP (No PCIe) package.

Table 114. 17x17 mm NP (No PCIe) Functional Contact Assignments

Ball Name	17x17 NP Ball	Power Group	Ball Type	Out of Reset Condition			
				Default Mode	Default Function	Input/ Output	Value
ADC1_IN0	Y14	VDDA_ADC_3P3	—	—	ADC1_IN0	Input	—
ADC1_IN1	W14	VDDA_ADC_3P3	—	—	ADC1_IN1	Input	—
ADC1_IN2	Y15	VDDA_ADC_3P3	—	—	ADC1_IN2	Input	—

Table 114. 17x17 mm NP (No PCIe) Functional Contact Assignments (continued)

Ball Name	17x17 NP Ball	Power Group	Ball Type	Out of Reset Condition			
				Default Mode	Default Function	Input/ Output	Value
ADC1_IN3	W15	VDDA_ADC_3P3	—	—	ADC1_IN3	Input	—
ADC2_IN0	Y16	VDDA_ADC_3P3	—	—	ADC2_IN0	Input	—
ADC2_IN1	W16	VDDA_ADC_3P3	—	—	ADC2_IN1	Input	—
ADC2_IN2	T16	VDDA_ADC_3P3	—	—	ADC2_IN2	Input	—
ADC2_IN3	U16	VDDA_ADC_3P3	—	—	ADC2_IN3	Input	—
BOOT_MODE0	N15	VDD_SNVS_IN	GPIO	—	BOOT_MODE0	Input	100 kΩ pull-down
BOOT_MODE1	P14	VDD_SNVS_IN	GPIO	—	BOOT_MODE1	Input	100 kΩ pull-down
CCM_CLK1_N	P19	VDD_HIGH_CAP	—	—	CCM_CLK1_N	—	—
CCM_CLK1_P	P20	VDD_HIGH_CAP	—	—	CCM_CLK1_P	—	—
CCM_CLK2	T14	VDD_HIGH_CAP	—	—	CCM_CLK2	—	—
CCM_PMIC_STBY_REQ	N16	VDD_SNVS_IN	GPIO	—	CCM_PMIC_STBY_REQ	Output	0
DRAM_ADDR00	L4	NVCC_DRAM	DDR	—	DRAM_ADDR00	Output	100 kΩ pull-up
DRAM_ADDR01	U4	NVCC_DRAM	DDR	—	DRAM_ADDR01	Output	100 kΩ pull-up
DRAM_ADDR02	K5	NVCC_DRAM	DDR	—	DRAM_ADDR02	Output	100 kΩ pull-up
DRAM_ADDR03	G5	NVCC_DRAM	DDR	—	DRAM_ADDR03	Output	100 kΩ pull-up
DRAM_ADDR04	M3	NVCC_DRAM	DDR	—	DRAM_ADDR04	Output	100 kΩ pull-up
DRAM_ADDR05	G4	NVCC_DRAM	DDR	—	DRAM_ADDR05	Output	100 kΩ pull-up
DRAM_ADDR06	T4	NVCC_DRAM	DDR	—	DRAM_ADDR06	Output	100 kΩ pull-up
DRAM_ADDR07	F4	NVCC_DRAM	DDR	—	DRAM_ADDR07	Output	100 kΩ pull-up
DRAM_ADDR08	M5	NVCC_DRAM	DDR	—	DRAM_ADDR08	Output	100 kΩ pull-up
DRAM_ADDR09	L5	NVCC_DRAM	DDR	—	DRAM_ADDR09	Output	100 kΩ pull-up
DRAM_ADDR10	N5	NVCC_DRAM	DDR	—	DRAM_ADDR10	Output	100 kΩ pull-up

Table 114. 17x17 mm NP (No PCIe) Functional Contact Assignments (continued)

Ball Name	17x17 NP Ball	Power Group	Ball Type	Out of Reset Condition			
				Default Mode	Default Function	Input/ Output	Value
DRAM_ADDR11	N4	NVCC_DRAM	DDR	—	DRAM_ADDR11	Output	100 kΩ pull-up
DRAM_ADDR12	P4	NVCC_DRAM	DDR	—	DRAM_ADDR12	Output	100 kΩ pull-up
DRAM_ADDR13	M4	NVCC_DRAM	DDR	—	DRAM_ADDR13	Output	100 kΩ pull-up
DRAM_ADDR14	R4	NVCC_DRAM	DDR	—	DRAM_ADDR14	Output	100 kΩ pull-up
DRAM_CAS_B	J4	NVCC_DRAM	DDR	—	DRAM_CAS_B	Output	100 kΩ pull-up
DRAM_CS0_B	H4	NVCC_DRAM	DDR	—	DRAM_CS0_B	Output	100 kΩ pull-up
DRAM_CS1_B	D3	NVCC_DRAM	DDR	—	DRAM_CS1_B	Output	100 kΩ pull-up
DRAM_DATA00	R1	NVCC_DRAM	DDR	—	DRAM_DATA00	Input	100 kΩ pull-up
DRAM_DATA01	T2	NVCC_DRAM	DDR	—	DRAM_DATA01	Input	100 kΩ pull-up
DRAM_DATA02	T1	NVCC_DRAM	DDR	—	DRAM_DATA02	Input	100 kΩ pull-up
DRAM_DATA03	R2	NVCC_DRAM	DDR	—	DRAM_DATA03	Input	100 kΩ pull-up
DRAM_DATA04	M1	NVCC_DRAM	DDR	—	DRAM_DATA04	Input	100 kΩ pull-up
DRAM_DATA05	M2	NVCC_DRAM	DDR	—	DRAM_DATA05	Input	100 kΩ pull-up
DRAM_DATA06	L2	NVCC_DRAM	DDR	—	DRAM_DATA06	Input	100 kΩ pull-up
DRAM_DATA07	N1	NVCC_DRAM	DDR	—	DRAM_DATA07	Input	100 kΩ pull-up
DRAM_DATA08	H1	NVCC_DRAM	DDR	—	DRAM_DATA08	Input	100 kΩ pull-up
DRAM_DATA09	F2	NVCC_DRAM	DDR	—	DRAM_DATA09	Input	100 kΩ pull-up
DRAM_DATA10	K2	NVCC_DRAM	DDR	—	DRAM_DATA10	Input	100 kΩ pull-up
DRAM_DATA11	J2	NVCC_DRAM	DDR	—	DRAM_DATA11	Input	100 kΩ pull-up

Table 114. 17x17 mm NP (No PCIe) Functional Contact Assignments (continued)

Ball Name	17x17 NP Ball	Power Group	Ball Type	Out of Reset Condition			
				Default Mode	Default Function	Input/ Output	Value
DRAM_DATA12	J1	NVCC_DRAM	DDR	—	DRAM_DATA12	Input	100 kΩ pull-up
DRAM_DATA13	F1	NVCC_DRAM	DDR	—	DRAM_DATA13	Input	100 kΩ pull-up
DRAM_DATA14	E2	NVCC_DRAM	DDR	—	DRAM_DATA14	Input	100 kΩ pull-up
DRAM_DATA15	E1	NVCC_DRAM	DDR	—	DRAM_DATA15	Input	100 kΩ pull-up
DRAM_DATA16	V1	NVCC_DRAM	DDR	—	DRAM_DATA16	Input	100 kΩ pull-up
DRAM_DATA17	W4	NVCC_DRAM	DDR	—	DRAM_DATA17	Input	100 kΩ pull-up
DRAM_DATA18	Y4	NVCC_DRAM	DDR	—	DRAM_DATA18	Input	100 kΩ pull-up
DRAM_DATA19	U2	NVCC_DRAM	DDR	—	DRAM_DATA19	Input	100 kΩ pull-up
DRAM_DATA20	W3	NVCC_DRAM	DDR	—	DRAM_DATA20	Input	100 kΩ pull-up
DRAM_DATA21	Y2	NVCC_DRAM	DDR	—	DRAM_DATA21	Input	100 kΩ pull-up
DRAM_DATA22	U1	NVCC_DRAM	DDR	—	DRAM_DATA22	Input	100 kΩ pull-up
DRAM_DATA23	V2	NVCC_DRAM	DDR	—	DRAM_DATA23	Input	100 kΩ pull-up
DRAM_DATA24	A2	NVCC_DRAM	DDR	—	DRAM_DATA24	Input	100 kΩ pull-up
DRAM_DATA25	D1	NVCC_DRAM	DDR	—	DRAM_DATA25	Input	100 kΩ pull-up
DRAM_DATA26	C1	NVCC_DRAM	DDR	—	DRAM_DATA26	Input	100 kΩ pull-up
DRAM_DATA27	D2	NVCC_DRAM	DDR	—	DRAM_DATA27	Input	100 kΩ pull-up
DRAM_DATA28	C2	NVCC_DRAM	DDR	—	DRAM_DATA28	Input	100 kΩ pull-up
DRAM_DATA29	B3	NVCC_DRAM	DDR	—	DRAM_DATA29	Input	100 kΩ pull-up
DRAM_DATA30	B4	NVCC_DRAM	DDR	—	DRAM_DATA30	Input	100 kΩ pull-up

Table 114. 17x17 mm NP (No PCIe) Functional Contact Assignments (continued)

Ball Name	17x17 NP Ball	Power Group	Ball Type	Out of Reset Condition			
				Default Mode	Default Function	Input/ Output	Value
DRAM_DATA31	A4	NVCC_DRAM	DDR	—	DRAM_DATA31	Input	100 kΩ pull-up
DRAM_DQM0	N2	NVCC_DRAM	DDR	—	DRAM_DQM0	Output	100 kΩ pull-up
DRAM_DQM1	G2	NVCC_DRAM	DDR	—	DRAM_DQM1	Output	100 kΩ pull-up
DRAM_DQM2	Y3	NVCC_DRAM	DDR	—	DRAM_DQM2	Output	100 kΩ pull-up
DRAM_DQM3	A3	NVCC_DRAM	DDR	—	DRAM_DQM3	Output	100 kΩ pull-up
DRAM_ODT0	U3	NVCC_DRAM	DDR	—	DRAM_ODT0	Output	100 kΩ pull-down
DRAM_RAS_B	H5	NVCC_DRAM	DDR	—	DRAM_RAS_B	Output	100 kΩ pull-up
DRAM_RESET	D4	NVCC_DRAM	DDR	—	DRAM_RESET	Output	100 kΩ pull-down
DRAM_SDBA0	G3	NVCC_DRAM	DDR	—	DRAM_SDBA0	Output	100 kΩ pull-up
DRAM_SDBA1	P3	NVCC_DRAM	DDR	—	DRAM_SDBA1	Output	100 kΩ pull-up
DRAM_SDBA2	K4	NVCC_DRAM	DDR	—	DRAM_SDBA2	Output	100 kΩ pull-up
DRAM_SDCKE0	P5	NVCC_DRAM	DDR	—	DRAM_SDCKE0	Output	100 kΩ pull-down
DRAM_SDCKE1	E4	NVCC_DRAM	DDR	—	DRAM_SDCKE1	Output	100 kΩ pull-down
DRAM_SDCLK0_N	L1	NVCC_DRAM	DDRCLK	—	DRAM_SDCLK0_N	—	—
DRAM_SDCLK0_P	K1	NVCC_DRAM	DDRCLK	—	DRAM_SDCLK0_P	Output	Low
DRAM_SDQS0_N	P2	NVCC_DRAM	DDRCLK	—	DRAM_SDQS0_N	—	—
DRAM_SDQS0_P	P1	NVCC_DRAM	DDRCLK	—	DRAM_SDQS0_P	Input	—
DRAM_SDQS1_N	H2	NVCC_DRAM	DDRCLK	—	DRAM_SDQS1_N	—	—
DRAM_SDQS1_P	G1	NVCC_DRAM	DDRCLK	—	DRAM_SDQS1_P	Input	—
DRAM_SDQS2_N	W1	NVCC_DRAM	DDRCLK	—	DRAM_SDQS2_N	—	—
DRAM_SDQS2_P	W2	NVCC_DRAM	DDRCLK	—	DRAM_SDQS2_P	Input	—
DRAM_SDQS3_N	B2	NVCC_DRAM	DDRCLK	—	DRAM_SDQS3_N	—	—
DRAM_SDQS3_P	B1	NVCC_DRAM	DDRCLK	—	DRAM_SDQS3_P	Input	—

Table 114. 17x17 mm NP (No PCIe) Functional Contact Assignments (continued)

Ball Name	17x17 NP Ball	Power Group	Ball Type	Out of Reset Condition			
				Default Mode	Default Function	Input/ Output	Value
DRAM_SDWE_B	J5	NVCC_DRAM	DDR	—	DRAM_SDWE_B	Output	100 kΩ pull-up
ENET1_COL	B5	NVCC_ENET	GPIO	ALT5	GPIO2_IO00	Input	Keeper
ENET1_CRS	C6	NVCC_ENET	GPIO	ALT5	GPIO2_IO01	Input	Keeper
ENET1_MDC	B6	NVCC_ENET	GPIO	ALT5	GPIO2_IO02	Input	Keeper
ENET1_MDIO	A6	NVCC_ENET	GPIO	ALT5	GPIO2_IO03	Input	Keeper
ENET1_RX_CLK	A5	NVCC_ENET	GPIO	ALT5	GPIO2_IO04	Input	Keeper
ENET1_TX_CLK	F7	NVCC_ENET	GPIO	ALT5	GPIO2_IO05	Input	Keeper
ENET2_COL	E7	NVCC_ENET	GPIO	ALT5	GPIO2_IO06	Input	Keeper
ENET2_CRS	E6	NVCC_ENET	GPIO	ALT5	GPIO2_IO07	Input	Keeper
ENET2_RX_CLK	E5	NVCC_ENET	GPIO	ALT5	GPIO2_IO08	Input	Keeper
ENET2_TX_CLK	D5	NVCC_ENET	GPIO	ALT5	GPIO2_IO09	Input	Keeper
GPIO1_IO00	C19	NVCC_GPIO	GPIO	ALT5	GPIO1_IO00	Input	Keeper
GPIO1_IO01	D19	NVCC_GPIO	GPIO	ALT5	GPIO1_IO01	Input	Keeper
GPIO1_IO02	C20	NVCC_GPIO	GPIO	ALT5	GPIO1_IO02	Input	Keeper
GPIO1_IO03	D20	NVCC_GPIO	GPIO	ALT5	GPIO1_IO03	Input	Keeper
GPIO1_IO04	A18	NVCC_GPIO	GPIO	ALT5	GPIO1_IO04	Input	Keeper
GPIO1_IO05	B18	NVCC_GPIO	GPIO	ALT5	GPIO1_IO05	Input	Keeper
GPIO1_IO06	D18	NVCC_GPIO	GPIO	ALT5	GPIO1_IO06	Input	Keeper
GPIO1_IO07	A17	NVCC_GPIO	GPIO	ALT5	GPIO1_IO07	Input	Keeper
GPIO1_IO08	B17	NVCC_GPIO	GPIO	ALT5	GPIO1_IO08	Input	Keeper
GPIO1_IO09	A19	NVCC_GPIO	GPIO	ALT5	GPIO1_IO09	Input	Keeper
GPIO1_IO10	B19	NVCC_GPIO	GPIO	ALT5	GPIO1_IO10	Input	Keeper
GPIO1_IO11	B20	NVCC_GPIO	GPIO	ALT5	GPIO1_IO11	Input	Keeper
GPIO1_IO12	B16	NVCC_GPIO	GPIO	ALT5	GPIO1_IO12	Input	Keeper
GPIO1_IO13	A16	NVCC_GPIO	GPIO	ALT5	GPIO1_IO13	Input	Keeper
JTAG_MOD	R7	NVCC_JTAG	GPIO	—	JTAG_MOD	Input	100 kΩ pull-up
JTAG_TCK	R9	NVCC_JTAG	GPIO	—	JTAG_TCK	Input	47 kΩ pull-up
JTAG_TDI	R10	NVCC_JTAG	GPIO	—	JTAG_TDI	Input	47 kΩ pull-up

Table 114. 17x17 mm NP (No PCIe) Functional Contact Assignments (continued)

Ball Name	17x17 NP Ball	Power Group	Ball Type	Out of Reset Condition			
				Default Mode	Default Function	Input/ Output	Value
JTAG_TDO	R8	NVCC_JTAG	GPIO	—	JTAG_TDO	Output	Keeper
JTAG_TMS	T10	NVCC_JTAG	GPIO	—	JTAG_TMS	Input	47 kΩ pull-up
JTAG_TRST_B	T9	NVCC_JTAG	GPIO	—	JTAG_TRST_B	Input	47 kΩ pull-up
KEY_COL0	G20	NVCC_KEY	GPIO	ALT5	GPIO2_IO10	Input	Keeper
KEY_COL1	F20	NVCC_KEY	GPIO	ALT5	GPIO2_IO11	Input	Keeper
KEY_COL2	G18	NVCC_KEY	GPIO	ALT5	GPIO2_IO12	Input	Keeper
KEY_COL3	E20	NVCC_KEY	GPIO	ALT5	GPIO2_IO13	Input	Keeper
KEY_COL4	E19	NVCC_KEY	GPIO	ALT5	GPIO2_IO14	Input	Keeper
KEY_ROW0	F16	NVCC_KEY	GPIO	ALT5	GPIO2_IO15	Input	Keeper
KEY_ROW1	E18	NVCC_KEY	GPIO	ALT5	GPIO2_IO16	Input	Keeper
KEY_ROW2	F18	NVCC_KEY	GPIO	ALT5	GPIO2_IO17	Input	Keeper
KEY_ROW3	F19	NVCC_KEY	GPIO	ALT5	GPIO2_IO18	Input	Keeper
KEY_ROW4	G19	NVCC_KEY	GPIO	ALT5	GPIO2_IO19	Input	Keeper
LCD1_CLK	L17	NVCC_LCD1	GPIO	ALT5	GPIO3_IO00	Input	Keeper
LCD1_DATA00	M20	NVCC_LCD1	GPIO	ALT5	GPIO3_IO01	Input	Keeper
LCD1_DATA01	M18	NVCC_LCD1	GPIO	ALT5	GPIO3_IO02	Input	Keeper
LCD1_DATA02	M19	NVCC_LCD1	GPIO	ALT5	GPIO3_IO03	Input	Keeper
LCD1_DATA03	N19	NVCC_LCD1	GPIO	ALT5	GPIO3_IO04	Input	Keeper
LCD1_DATA04	N20	NVCC_LCD1	GPIO	ALT5	GPIO3_IO05	Input	Keeper
LCD1_DATA05	M16	NVCC_LCD1	GPIO	ALT5	GPIO3_IO06	Input	Keeper
LCD1_DATA06	M15	NVCC_LCD1	GPIO	ALT5	GPIO3_IO07	Input	Keeper
LCD1_DATA07	L20	NVCC_LCD1	GPIO	ALT5	GPIO3_IO08	Input	Keeper
LCD1_DATA08	K18	NVCC_LCD1	GPIO	ALT5	GPIO3_IO09	Input	Keeper
LCD1_DATA09	L16	NVCC_LCD1	GPIO	ALT5	GPIO3_IO10	Input	Keeper
LCD1_DATA10	L19	NVCC_LCD1	GPIO	ALT5	GPIO3_IO11	Input	Keeper
LCD1_DATA11	L15	NVCC_LCD1	GPIO	ALT5	GPIO3_IO12	Input	Keeper
LCD1_DATA12	K16	NVCC_LCD1	GPIO	ALT5	GPIO3_IO13	Input	Keeper
LCD1_DATA13	K15	NVCC_LCD1	GPIO	ALT5	GPIO3_IO14	Input	Keeper
LCD1_DATA14	K17	NVCC_LCD1	GPIO	ALT5	GPIO3_IO15	Input	Keeper
LCD1_DATA15	H16	NVCC_LCD1	GPIO	ALT5	GPIO3_IO16	Input	Keeper

Table 114. 17x17 mm NP (No PCIe) Functional Contact Assignments (continued)

Ball Name	17x17 NP Ball	Power Group	Ball Type	Out of Reset Condition			
				Default Mode	Default Function	Input/ Output	Value
LCD1_DATA16	H20	NVCC_LCD1	GPIO	ALT5	GPIO3_IO17	Input	Keeper
LCD1_DATA17	K19	NVCC_LCD1	GPIO	ALT5	GPIO3_IO18	Input	Keeper
LCD1_DATA18	K20	NVCC_LCD1	GPIO	ALT5	GPIO3_IO19	Input	Keeper
LCD1_DATA19	J20	NVCC_LCD1	GPIO	ALT5	GPIO3_IO20	Input	Keeper
LCD1_DATA20	H17	NVCC_LCD1	GPIO	ALT5	GPIO3_IO21	Input	Keeper
LCD1_DATA21	G17	NVCC_LCD1	GPIO	ALT5	GPIO3_IO22	Input	Keeper
LCD1_DATA22	H19	NVCC_LCD1	GPIO	ALT5	GPIO3_IO23	Input	Keeper
LCD1_DATA23	G16	NVCC_LCD1	GPIO	ALT5	GPIO3_IO24	Input	Keeper
LCD1_ENABLE	J19	NVCC_LCD1	GPIO	ALT5	GPIO3_IO25	Input	Keeper
LCD1_HSYNC	J16	NVCC_LCD1	GPIO	ALT5	GPIO3_IO26	Input	Keeper
LCD1_RESET	J18	NVCC_LCD1	GPIO	ALT5	GPIO3_IO27	Input	Keeper
LCD1_VSYNC	J15	NVCC_LCD1	GPIO	ALT5	GPIO3_IO28	Input	Keeper
NAND_ALE	W6	NVCC_NAND	GPIO	ALT5	GPIO4_IO00	Input	Keeper
NAND_CE0_B	U7	NVCC_NAND	GPIO	ALT5	GPIO4_IO01	Input	Keeper
NAND_CE1_B	V9	NVCC_NAND	GPIO	ALT5	GPIO4_IO02	Input	Keeper
NAND_CLE	T8	NVCC_NAND	GPIO	ALT5	GPIO4_IO03	Input	Keeper
NAND_DATA00	V6	NVCC_NAND	GPIO	ALT5	GPIO4_IO04	Input	Keeper
NAND_DATA01	W8	NVCC_NAND	GPIO	ALT5	GPIO4_IO05	Input	Keeper
NAND_DATA02	Y7	NVCC_NAND	GPIO	ALT5	GPIO4_IO06	Input	Keeper
NAND_DATA03	U5	NVCC_NAND	GPIO	ALT5	GPIO4_IO07	Input	Keeper
NAND_DATA04	W7	NVCC_NAND	GPIO	ALT5	GPIO4_IO08	Input	Keeper
NAND_DATA05	T5	NVCC_NAND	GPIO	ALT5	GPIO4_IO09	Input	Keeper
NAND_DATA06	Y8	NVCC_NAND	GPIO	ALT5	GPIO4_IO10	Input	Keeper
NAND_DATA07	T6	NVCC_NAND	GPIO	ALT5	GPIO4_IO11	Input	Keeper
NAND_RE_B	U8	NVCC_NAND	GPIO	ALT5	GPIO4_IO12	Input	Keeper
NAND_READY_B	Y6	NVCC_NAND	GPIO	ALT5	GPIO4_IO13	Input	Keeper
NAND_WE_B	T7	NVCC_NAND	GPIO	ALT5	GPIO4_IO14	Input	Keeper
NAND_WP_B	V7	NVCC_NAND	GPIO	ALT5	GPIO4_IO15	Input	Keeper
ONOFF	R15	VDD_SNVS_IN	GPIO	—	ONOFF	Input	100 kΩ pull-up
POR_B	R16	VDD_SNVS_IN	GPIO	—	POR_B	Input	100 kΩ pull-up

Table 114. 17x17 mm NP (No PCIe) Functional Contact Assignments (continued)

Ball Name	17x17 NP Ball	Power Group	Ball Type	Out of Reset Condition			
				Default Mode	Default Function	Input/ Output	Value
QSPI1A_DATA0	E15	NVCC_QSPI	GPIO	ALT5	GPIO4_IO16	Input	Keeper
QSPI1A_DATA1	C15	NVCC_QSPI	GPIO	ALT5	GPIO4_IO17	Input	Keeper
QSPI1A_DATA2	D14	NVCC_QSPI	GPIO	ALT5	GPIO4_IO18	Input	Keeper
QSPI1A_DATA3	E16	NVCC_QSPI	GPIO	ALT5	GPIO4_IO19	Input	Keeper
QSPI1A_DQS	A13	NVCC_QSPI	GPIO	ALT5	GPIO4_IO20	Input	Keeper
QSPI1A_SCLK	D17	NVCC_QSPI	GPIO	ALT5	GPIO4_IO21	Input	Keeper
QSPI1A_SS0_B	C17	NVCC_QSPI	GPIO	ALT5	GPIO4_IO22	Input	Keeper
QSPI1A_SS1_B	E17	NVCC_QSPI	GPIO	ALT5	GPIO4_IO23	Input	Keeper
QSPI1B_DATA0	B14	NVCC_QSPI	GPIO	ALT5	GPIO4_IO24	Input	Keeper
QSPI1B_DATA1	A14	NVCC_QSPI	GPIO	ALT5	GPIO4_IO25	Input	Keeper
QSPI1B_DATA2	D13	NVCC_QSPI	GPIO	ALT5	GPIO4_IO26	Input	Keeper
QSPI1B_DATA3	C13	NVCC_QSPI	GPIO	ALT5	GPIO4_IO27	Input	Keeper
QSPI1B_DQS	B13	NVCC_QSPI	GPIO	ALT5	GPIO4_IO28	Input	Keeper
QSPI1B_SCLK	B15	NVCC_QSPI	GPIO	ALT5	GPIO4_IO29	Input	Keeper
QSPI1B_SS0_B	C14	NVCC_QSPI	GPIO	ALT5	GPIO4_IO30	Input	Keeper
QSPI1B_SS1_B	A15	NVCC_QSPI	GPIO	ALT5	GPIO4_IO31	Input	Keeper
RGMII1_RD0	D8	NVCC_RGMII1	GPIO	ALT5	GPIO5_IO00	Input	Keeper
RGMII1_RD1	C9	NVCC_RGMII1	GPIO	ALT5	GPIO5_IO01	Input	Keeper
RGMII1_RD2	D7	NVCC_RGMII1	GPIO	ALT5	GPIO5_IO02	Input	Keeper
RGMII1_RD3	E8	NVCC_RGMII1	GPIO	ALT5	GPIO5_IO03	Input	Keeper
RGMII1_RX_CTL	C10	NVCC_RGMII1	GPIO	ALT5	GPIO5_IO04	Input	Keeper
RGMII1_RXC	E9	NVCC_RGMII1	GPIO	ALT5	GPIO5_IO05	Input	Keeper
RGMII1_TD0	D11	NVCC_RGMII1	GPIO	ALT5	GPIO5_IO06	Input	Keeper
RGMII1_TD1	C12	NVCC_RGMII1	GPIO	ALT5	GPIO5_IO07	Input	Keeper
RGMII1_TD2	E11	NVCC_RGMII1	GPIO	ALT5	GPIO5_IO08	Input	Keeper
RGMII1_TD3	D10	NVCC_RGMII1	GPIO	ALT5	GPIO5_IO09	Input	Keeper
RGMII1_TX_CTL	E10	NVCC_RGMII1	GPIO	ALT5	GPIO5_IO10	Input	Keeper
RGMII1_TXC	C11	NVCC_RGMII1	GPIO	ALT5	GPIO5_IO11	Input	Keeper
RGMII2_RD0	A8	NVCC_RGMII2	GPIO	ALT5	GPIO5_IO12	Input	Keeper
RGMII2_RD1	B8	NVCC_RGMII2	GPIO	ALT5	GPIO5_IO13	Input	Keeper
RGMII2_RD2	A7	NVCC_RGMII2	GPIO	ALT5	GPIO5_IO14	Input	Keeper

Table 114. 17x17 mm NP (No PCIe) Functional Contact Assignments (continued)

Ball Name	17x17 NP Ball	Power Group	Ball Type	Out of Reset Condition			
				Default Mode	Default Function	Input/ Output	Value
RGMII2_RD3	B7	NVCC_RGMII2	GPIO	ALT5	GPIO5_IO15	Input	Keeper
RGMII2_RX_CTL	B9	NVCC_RGMII2	GPIO	ALT5	GPIO5_IO16	Input	Keeper
RGMII2_RXC	A9	NVCC_RGMII2	GPIO	ALT5	GPIO5_IO17	Input	Keeper
RGMII2_TD0	A11	NVCC_RGMII2	GPIO	ALT5	GPIO5_IO18	Input	Keeper
RGMII2_TD1	B11	NVCC_RGMII2	GPIO	ALT5	GPIO5_IO19	Input	Keeper
RGMII2_TD2	A12	NVCC_RGMII2	GPIO	ALT5	GPIO5_IO20	Input	Keeper
RGMII2_TD3	B12	NVCC_RGMII2	GPIO	ALT5	GPIO5_IO21	Input	Keeper
RGMII2_TX_CTL	B10	NVCC_RGMII2	GPIO	ALT5	GPIO5_IO22	Input	Keeper
RGMII2_TXC	A10	NVCC_RGMII2	GPIO	ALT5	GPIO5_IO23	Input	Keeper
RTC_XTALI	V19	VDD_SNVS_CAP	—	—	RTC_XTALI	—	—
RTC_XTALO	V20	VDD_SNVS_CAP	—	—	RTC_XTALO	—	—
SD2_CLK	E12	NVCC_SD2	GPIO	ALT5	GPIO6_IO06	Input	Keeper
SD2_CMD	F12	NVCC_SD2	GPIO	ALT5	GPIO6_IO07	Input	Keeper
SD2_DATA0	E13	NVCC_SD2	GPIO	ALT5	GPIO6_IO08	Input	Keeper
SD2_DATA1	E14	NVCC_SD2	GPIO	ALT5	GPIO6_IO09	Input	Keeper
SD2_DATA2	F10	NVCC_SD2	GPIO	ALT5	GPIO6_IO10	Input	Keeper
SD2_DATA3	F11	NVCC_SD2	GPIO	ALT5	GPIO6_IO11	Input	Keeper
SD3_CLK	V11	NVCC_LOW NVCC_HIGH	GPIO	ALT5	GPIO7_IO00	Input	100 kΩ pull-down
SD3_CMD	T13	NVCC_LOW NVCC_HIGH	GPIO	ALT5	GPIO7_IO01	Input	100 kΩ pull-down
SD3_DATA0	U10	NVCC_LOW NVCC_HIGH	GPIO	ALT5	GPIO7_IO02	Input	100 kΩ pull-down
SD3_DATA1	T11	NVCC_LOW NVCC_HIGH	GPIO	ALT5	GPIO7_IO03	Input	100 kΩ pull-down
SD3_DATA2	V15	NVCC_LOW NVCC_HIGH	GPIO	ALT5	GPIO7_IO04	Input	100 kΩ pull-down
SD3_DATA3	V14	NVCC_LOW NVCC_HIGH	GPIO	ALT5	GPIO7_IO05	Input	100 kΩ pull-down
SD3_DATA4	U14	NVCC_LOW NVCC_HIGH	GPIO	ALT5	GPIO7_IO06	Input	100 kΩ pull-down
SD3_DATA5	U13	NVCC_LOW NVCC_HIGH	GPIO	ALT5	GPIO7_IO07	Input	100 kΩ pull-down

Table 114. 17x17 mm NP (No PCIe) Functional Contact Assignments (continued)

Ball Name	17x17 NP Ball	Power Group	Ball Type	Out of Reset Condition			
				Default Mode	Default Function	Input/ Output	Value
SD3_DATA6	V12	NVCC_LOW NVCC_HIGH	GPIO	ALT5	GPIO7_IO08	Input	100 kΩ pull-down
SD3_DATA7	U11	NVCC_LOW NVCC_HIGH	GPIO	ALT5	GPIO7_IO09	Input	100 kΩ pull-down
SD4_CLK	W11	NVCC_SD4	GPIO	ALT5	GPIO6_IO12	Input	Keeper
SD4_CMD	W12	NVCC_SD4	GPIO	ALT5	GPIO6_IO13	Input	Keeper
SD4_DATA0	Y9	NVCC_SD4	GPIO	ALT5	GPIO6_IO14	Input	Keeper
SD4_DATA1	W9	NVCC_SD4	GPIO	ALT5	GPIO6_IO15	Input	Keeper
SD4_DATA2	Y13	NVCC_SD4	GPIO	ALT5	GPIO6_IO16	Input	Keeper
SD4_DATA3	W13	NVCC_SD4	GPIO	ALT5	GPIO6_IO17	Input	Keeper
SD4_DATA4	Y12	NVCC_SD4	GPIO	ALT5	GPIO6_IO18	Input	Keeper
SD4_DATA5	Y11	NVCC_SD4	GPIO	ALT5	GPIO6_IO19	Input	Keeper
SD4_DATA6	Y10	NVCC_SD4	GPIO	ALT5	GPIO6_IO20	Input	Keeper
SD4_DATA7	W10	NVCC_SD4	GPIO	ALT5	GPIO6_IO21	Input	Keeper
SD4_RESET_B	T12	NVCC_SD4	GPIO	ALT5	GPIO6_IO22	Input	Keeper
SNVS_PMIC_ON_REQ	P16	VDD_SNVS_IN	GPIO	—	SNVS_PMIC_ON_REQ	Output	100 kΩ pull-up
SNVS_TAMPER	P15	VDD_SNVS_IN	GPIO	—	SNVS_TAMPER	Input	100 kΩ pull-down
TEST_MODE	N14	VDD_SNVS_IN	—	—	TEST_MODE	Input	100 kΩ pull-down
USB_H_DATA	Y5	NVCC_USB_H	GPIO	ALT5	GPIO7_IO10	Input	100 kΩ pull-down
USB_H_STROBE	W5	NVCC_USB_H	GPIO	ALT5	GPIO7_IO11	Input	100 kΩ pull-down
USB_OTG1_CHD_B	W20	VDD_USB_CAP	—	—	USB_OTG1_CHD_B	—	—
USB_OTG1_DN	W19	VDD_USB_CAP	—	—	USB_OTG1_DN	—	—
USB_OTG1_DP	Y19	VDD_USB_CAP	—	—	USB_OTG1_DP	—	—
USB_OTG2_DN	W17	VDD_USB_CAP	—	—	USB_OTG2_DN	—	—
USB_OTG2_DP	Y17	VDD_USB_CAP	—	—	USB_OTG2_DP	—	—
XTALI	T19	NVCC_PLL	—	—	XTALI	—	—
XTALO	T20	NVCC_PLL	—	—	XTALO	—	—

6.4.4 17x17 mm NP (No PCIe), 0.8 mm Pitch, 20x20 Ball Map

Table 115. 17x17 mm (No PCIe), 0.8 mm Pitch, 20x20 Ball Map

G	F	E	D	C	B	A	
DRAM_SDQS1_P	DRAM_DATA13	DRAM_DATA15	DRAM_DATA25	DRAM_DATA26	DRAM_SDQS3_P	VSS	**1**
DRAM_DQM1	DRAM_DATA09	DRAM_DATA14	DRAM_DATA27	DRAM_DATA28	DRAM_SDQS3_N	DRAM_DATA24	**2**
DRAM_SDBA0	VSS	VSS	DRAM_CS1_B	VSS	DRAM_DATA29	DRAM_DQM3	**3**
DRAM_ADDR05	DRAM_ADDR07	DRAM_SDCKE1	DRAM_RESET	VSS	DRAM_DATA30	DRAM_DATA31	**4**
DRAM_ADDR03	VSS	ENET2_RX_CLK	ENET2_TX_CLK	DRAM_ZQPAD	ENET1_COL	ENET1_RX_CLK	**5**
NVCC_DRAM	NVCC_ENET	ENET2_CRS	VSS	ENET1_CRS	ENET1_MDC	ENET1_MDIO	**6**
VSS	ENET1_TX_CLK	ENET2_COL	RGMII1_RD2	VDD_SOC_IN	RGMII2_RD3	RGMII2_RD2	**7**
VSS	NVCC_RGMII1	RGMII1_RD3	RGMII1_RD0	VDD_SOC_IN	RGMII2_RD1	RGMII2_RD0	**8**
VSS	NVCC_RGMII2	RGMII1_RXC	VSS	RGMII1_RD1	RGMII2_RX_CTL	RGMII2_RXC	**9**
VSS	SD2_DATA2	RGMII1_TX_CTL	RGMII1_TD3	RGMII1_RX_CTL	RGMII2_TX_CTL	RGMII2_TXC	**10**
VSS	SD2_DATA3	RGMII1_TD2	RGMII1_TD0	RGMII1_TXC	RGMII2_TD1	RGMII2_TD0	**11**
VSS	SD2_CMD	SD2_CLK	VSS	RGMII1_TD1	RGMII2_TD3	RGMII2_TD2	**12**
VSS	NVCC_SD2	SD2_DATA0	QSPI1B_DATA2	QSPI1B_DATA3	QSPI1B_DQS	QSPI1A_DQS	**13**
VSS	NVCC_QSPI	SD2_DATA1	QSPI1A_DATA2	QSPI1B_SS0_B	QSPI1B_DATA0	QSPI1B_DATA1	**14**
NVCC_KEY	NVCC_GPIO	QSPI1A_DATA0	VSS	QSPI1A_DATA1	QSPI1B_SCLK	QSPI1B_SS1_B	**15**
LCD1_DATA23	KEY_ROW0	QSPI1A_DATA3	VDD_ARM_CAP	VDD_ARM_CAP	GPIO1_IO12	GPIO1_IO13	**16**
LCD1_DATA21	VSS	QSPI1A_SS1_B	QSPI1A_SCLK	QSPI1A_SS0_B	GPIO1_IO08	GPIO1_IO07	**17**
KEY_COL2	KEY_ROW2	KEY_ROW1	GPIO1_IO06	VSS	GPIO1_IO05	GPIO1_IO04	**18**
KEY_ROW4	KEY_ROW3	KEY_COL4	GPIO1_IO01	GPIO1_IO00	GPIO1_IO10	GPIO1_IO09	**19**
KEY_COL0	KEY_COL1	KEY_COL3	GPIO1_IO03	GPIO1_IO02	GPIO1_IO11	VSS	**20**
G	**F**	**E**	**D**	**C**	**B**	**A**	

Table 115. 17x17 mm (No PCIe), 0.8 mm Pitch, 20x20 Ball Map (continued)

N	M	L	K	J	H	
DRAM_DATA07	DRAM_DATA04	DRAM_SDCLK0_N	DRAM_SDCLK0_P	DRAM_DATA12	DRAM_DATA08	**1**
DRAM_DQM0	DRAM_DATA05	DRAM_DATA06	DRAM_DATA10	DRAM_DATA11	DRAM_SDQS1_N	**2**
VSS	DRAM_ADDR04	VSS	VSS	DRAM_VREF	VSS	**3**
DRAM_ADDR11	DRAM_ADDR13	DRAM_ADDR00	DRAM_SDBA2	DRAM_CAS_B	DRAM_CS0_B	**4**
DRAM_ADDR10	DRAM_ADDR08	DRAM_ADDR09	DRAM_ADDR02	DRAM_SDWE_B	DRAM_RAS_B	**5**
NVCC_DRAM	NVCC_DRAM	NVCC_DRAM	NVCC_DRAM	NVCC_DRAM	NVCC_DRAM	**6**
VSS	VSS	VSS	NVCC_DRAM_2P5	VSS	VSS	**7**
VDD_SOC_CAP	VDD_SOC_CAP	VDD_SOC_CAP	VDD_SOC_CAP	VDD_SOC_CAP	VDD_SOC_CAP	**8**
VDD_SOC_CAP	VDD_SOC_IN	VDD_SOC_IN	VDD_SOC_IN	VDD_SOC_IN	VDD_SOC_CAP	**9**
VDD_SOC_CAP	VDD_SOC_IN	VSS	VSS	VDD_ARM_IN	VDD_ARM_CAP	**10**
VDD_SOC_CAP	VDD_SOC_IN	VSS	VSS	VDD_ARM_IN	VDD_ARM_CAP	**11**
VDD_SOC_CAP	VDD_SOC_IN	VDD_ARM_IN	VDD_ARM_IN	VDD_ARM_IN	VDD_ARM_CAP	**12**
VSS	VDD_SOC_CAP	VDD_ARM_CAP	VDD_ARM_CAP	VDD_ARM_CAP	VDD_ARM_CAP	**13**
TEST_MODE	VSS	VSS	VSS	VSS	VSS	**14**
BOOT_MODE0	LCD1_DATA06	LCD1_DATA11	LCD1_DATA13	LCD1_VSYNC	NVCC_LCD1	**15**
CCM_PMIC_STBY_REQ	LCD1_DATA05	LCD1_DATA09	LCD1_DATA12	LCD1_HSYNC	LCD1_DATA15	**16**
VDD_HIGH_CAP	VSS	LCD1_CLK	LCD1_DATA14	VSS	LCD1_DATA20	**17**
VDD_HIGH_CAP	LCD1_DATA01	PCIE_VP_CAP	LCD1_DATA08	LCD1_RESET	VDD_ARM_IN	**18**
LCD1_DATA03	LCD1_DATA02	LCD1_DATA10	LCD1_DATA17	LCD1_ENABLE	LCD1_DATA22	**19**
LCD1_DATA04	LCD1_DATA00	LCD1_DATA07	LCD1_DATA18	LCD1_DATA19	LCD1_DATA16	**20**
N	**M**	**L**	**K**	**J**	**H**	

Table 115. 17x17 mm (No PCIe), 0.8 mm Pitch, 20x20 Ball Map (continued)

	Y	W	V	U	T	R	P	
1	VSS	DRAM_SDQS2_N	DRAM_DATA16	DRAM_DATA22	DRAM_DATA02	DRAM_DATA00	DRAM_SDQS0_P	**1**
2	DRAM_DATA21	DRAM_SDQS2_P	DRAM_DATA23	DRAM_DATA19	DRAM_DATA01	DRAM_DATA03	DRAM_SDQS0_N	**2**
3	DRAM_DQM2	DRAM_DATA20	VSS	DRAM_ODT0	VSS	VSS	DRAM_SDBA1	**3**
4	DRAM_DATA18	DRAM_DATA17	VSS	DRAM_ADDR01	DRAM_ADDR06	DRAM_ADDR14	DRAM_ADDR12	**4**
5	USB_H_DATA	USB_H_STROBE	NVCC_USB_H	NAND_DATA03	NAND_DATA05	VSS	DRAM_SDCKE0	**5**
6	NAND_READY_B	NAND_ALE	NAND_DATA00	VSS	NAND_DATA07	NVCC_NAND	NVCC_DRAM	**6**
7	NAND_DATA02	NAND_DATA04	NAND_WP_B	NAND_CE0_B	NAND_WE_B	JTAG_MOD	VSS	**7**
8	NAND_DATA06	NAND_DATA01	VDD_SOC_CAP	NAND_RE_B	NAND_CLE	JTAG_TDO	VSS	**8**
9	SD4_DATA0	SD4_DATA1	NAND_CE1_B	VSS	JTAG_TRST_B	JTAG_TCK	VSS	**9**
10	SD4_DATA6	SD4_DATA7	NVCC_SD4	SD3_DATA0	JTAG_TMS	JTAG_TDI	VSS	**10**
11	SD4_DATA5	SD4_CLK	SD3_CLK	SD3_DATA7	SD3_DATA1	NVCC_JTAG	VSS	**11**
12	SD4_DATA4	SD4_CMD	SD3_DATA6	VSS	SD4_RESET_B	NVCC_HIGH	VSS	**12**
13	SD4_DATA2	SD4_DATA3	NVCC_LOW	SD3_DATA5	SD3_CMD	VDDA_ADC_3P3	NGND_KEL0	**13**
14	ADC1_IN0	ADC1_IN1	SD3_DATA3	SD3_DATA4	CCM_CLK2	ADC_VREFL	BOOT_MODE1	**14**
15	ADC1_IN2	ADC1_IN3	SD3_DATA2	VSS	GPANAIO	ONOFF	SNVS_TAMPER	**15**
16	ADC2_IN0	ADC2_IN1	ADC_VREFH	ADC2_IN3	ADC2_IN2	POR_B	SNVS_PMIC_ON_REQ	**16**
17	USB_OTG2_DP	USB_OTG2_DN	VDD_USB_CAP	USB_OTG2_VBUS	USB_OTG1_VBUS	VSS	VDD_HIGH_IN	**17**
18	VSS	VSS	VSS	NVCC_PLL	VDD_SNVS_CAP	VDD_SNVS_IN	VDD_HIGH_IN	**18**
19	USB_OTG1_DP	USB_OTG1_DN	RTC_XTALI	VSS	XTALI	VSS	CCM_CLK1_N	**19**
20	VSS	USB_OTG1_CHD_B	RTC_XTALO	VSS	XTALO	VSS	CCM_CLK1_P	**20**
	Y	**W**	**V**	**U**	**T**	**R**	**P**	

6.4.5 17x17 mm WP (with PCIe) Supplies Contact Assignments and Functional Contact Assignments

Table 116 shows supplies contact assignments for the 17x17 mm WP (with PCIe) package.

Table 116. 17x17 mm WP (with PCIe) Supplies Contact Assignments

Supply Rail Name	17x17 WP [with PCIe] Ball(s) Position(s)	Remark
DRAM_VREF	J3	DDR voltage reference input. Connect to a voltage source that is 50% of NVCC_DRAM.
DRAM_ZQPAD	C5	DDR output buffer driver calibration reference voltage input. Connect DRAM_ZQPAD to an external 240 ohm 1% resistor to Vss.
GPANAIO	U16	Analog output for NXP use only. This output must always be left unconnected.
NGND_KEL0	P13	Connect to Vss
NVCC_DRAM	G6, H6, J6, K6, L6, M6, N6, P6	Supply input for the DDR I/O interface
NVCC_DRAM_2P5	K7	Supply input for the DDR interface
NVCC_ENET	F6	Supply input for the ENET interfaces
NVCC_GPIO	F15	Supply input for the GPIO interface
NVCC_HIGH	R12	3.3 V Supply input for the dual-voltage I/Os on the SD3 interface
NVCC_JTAG	R11	Supply input for the JTAG interface
NVCC_KEY	G15	Supply input for the Key Pad Port (KPP) interface
NVCC_LCD1	H15	Supply input for the LCD interface
NVCC_LOW	V13	1.8 V Supply input for the dual-voltage I/Os on the SD3 interface
NVCC_NAND	R6	Supply input for the Raw NAND flash memories interface
NVCC_PLL	W20	Supply input for the PLLs
NVCC_QSPI	F14	Supply input for the QSPI interface
NVCC_RGMII1	F8	Supply input for the RGMII1 interface
NVCC_RGMII2	F9	Supply input for the RGMII2 interface
NVCC_SD2	F13	Supply input for the SD2 interface
NVCC_SD4	V10	Supply input for the SD4 interface
NVCC_USB_H	V5	Supply input for the USB HSIC interface
PCIE_REXT	N18	PCIe impedance calibration resistor. Connect PCIE_REXT to an external 200 ohm 1% resistor to Vss.
PCIE_VP	P18	Supply input for the PCIe PHY
PCIE_VPH	R18	Supply input for the PCIe PHY
PCIE_VPTX	P17	Supply input for the PCIe PHY

Table 116. 17x17 mm WP (with PCIe) Supplies Contact Assignments (continued)

Supply Rail Name	17x17 WP [with PCIe] Ball(s) Position(s)	Remark
USB_OTG1_VBUS	T16	VBUS input for USB_OTG1
USB_OTG2_VBUS	T15	VBUS input for USB_OTG2
VDD_ARM_CAP	C16, D16, H10, H11, H12, H13, J13, K13, L13	Supply voltage output from internal LDO_ARM. Requires external capacitor(s).
VDD_ARM_IN	H18, J10, J11, J12, K12, L12	Supply voltage input for internal LDO_ARM.
VDD_HIGH_CAP	V17, V18	Supply voltage output from internal LDO_2P5. Requires external capacitor(s).
VDD_HIGH_IN	U17, U18	Supply voltage input to internal LDO_2P5, LDO_1P1 and LDO_SNVS.
VDD_SNVS_CAP	V16	Supply voltage output from internal LDO_SNVS. Requires external capacitor(s).
VDD_SNVS_IN	T18	Supply voltage input to the SNVS voltage domain
VDD_SOC_CAP	H8, H9, J8, K8, L8, M8, M13, N8, N9, N10, N11, N12, V8	Supply voltage output from internal LDO_SOC. Requires external capacitor(s).
VDD_SOC_IN	C7, C8, J9, K9, L9, M9, M10, M11, M12	Supply voltage input to internal LDO_SOC and LDO_PCIE
VDD_USB_CAP	V15	Supply voltage output from internal LDO_USB. Requires external capacitor(s).
VDDA_ADC_3P3	R13	Supply voltage input to the ADC. This supply must be provided even if the ADC is not used.
VSS	A1, A20, C3, C4, C18, D6, D9, D12, D15, E3, F3, F5, F17, G7, G8, G9, G10, G11, G12, G13, G14, H3, H7, H14, J7, J14, J17, K3, K10, K11, K14, L3, L7, L10, L11, L14, M7, M14, M17, N3, N7, N13, N19, N20, P7, P8, P9, P10, P11, P12, R3, R5, R17, T3, T19, T20, U6, U9, U12, U15, V3, V4, W16, W18, Y1, Y16, Y18, Y20	Ground

Table 117 shows an alpha-sorted list of functional contact assignments for the 17x17 mm WP (with PCIe) package.

Table 117. 17x17 WP (with PCIe) Functional Contact Assignments

Ball Name	17x17 WP Ball	Power Group	Ball Type	Out of Reset Condition			
				Default Mode	Default Function	Input/ Output	Value
ADC1_IN0	Y14	VDDA_ADC_3P3	—	—	ADC1_IN0	Input	—
ADC1_IN1	W14	VDDA_ADC_3P3	—	—	ADC1_IN1	Input	—

Table 117. 17x17 WP (with PCIe) Functional Contact Assignments (continued)

Ball Name	17x17 WP Ball	Power Group	Ball Type	Out of Reset Condition			
				Default Mode	Default Function	Input/ Output	Value
BOOT_MODE0	U20	VDD_SNVS_IN	GPIO	—	BOOT_MODE0	Input	100 kΩ pull-down
BOOT_MODE1	U19	VDD_SNVS_IN	GPIO	—	BOOT_MODE1	Input	100 kΩ pull-down
CCM_CLK1_N	P16	VDD_HIGH_CAP	—	—	CCM_CLK1_N	—	—
CCM_CLK1_P	R16	VDD_HIGH_CAP	—	—	CCM_CLK1_P	—	—
CCM_CLK2	R15	VDD_HIGH_CAP	—	—	CCM_CLK2	—	—
CCM_PMIC_STBY_REQ	P15	VDD_SNVS_IN	GPIO	—	CCM_PMIC_STBY_REQ	Output	0
DRAM_ADDR00	L4	NVCC_DRAM	DDR	—	DRAM_ADDR00	Output	100 kΩ pull-up
DRAM_ADDR01	U4	NVCC_DRAM	DDR	—	DRAM_ADDR01	Output	100 kΩ pull-up
DRAM_ADDR02	K5	NVCC_DRAM	DDR	—	DRAM_ADDR02	Output	100 kΩ pull-up
DRAM_ADDR03	G5	NVCC_DRAM	DDR	—	DRAM_ADDR03	Output	100 kΩ pull-up
DRAM_ADDR04	M3	NVCC_DRAM	DDR	—	DRAM_ADDR04	Output	100 kΩ pull-up
DRAM_ADDR05	G4	NVCC_DRAM	DDR	—	DRAM_ADDR05	Output	100 kΩ pull-up
DRAM_ADDR06	T4	NVCC_DRAM	DDR	—	DRAM_ADDR06	Output	100 kΩ pull-up
DRAM_ADDR07	F4	NVCC_DRAM	DDR	—	DRAM_ADDR07	Output	100 kΩ pull-up
DRAM_ADDR08	M5	NVCC_DRAM	DDR	—	DRAM_ADDR08	Output	100 kΩ pull-up
DRAM_ADDR09	L5	NVCC_DRAM	DDR	—	DRAM_ADDR09	Output	100 kΩ pull-up
DRAM_ADDR10	N5	NVCC_DRAM	DDR	—	DRAM_ADDR10	Output	100 kΩ pull-up
DRAM_ADDR11	N4	NVCC_DRAM	DDR	—	DRAM_ADDR11	Output	100 kΩ pull-up
DRAM_ADDR12	P4	NVCC_DRAM	DDR	—	DRAM_ADDR12	Output	100 kΩ pull-up
DRAM_ADDR13	M4	NVCC_DRAM	DDR	—	DRAM_ADDR13	Output	100 kΩ pull-up

Table 117. 17x17 WP (with PCIe) Functional Contact Assignments (continued)

Ball Name	17x17 WP Ball	Power Group	Ball Type	Out of Reset Condition			
				Default Mode	Default Function	Input/ Output	Value
DRAM_ADDR14	R4	NVCC_DRAM	DDR	—	DRAM_ADDR14	Output	100 kΩ pull-up
DRAM_CAS_B	J4	NVCC_DRAM	DDR	—	DRAM_CAS_B	Output	100 kΩ pull-up
DRAM_CS0_B	H4	NVCC_DRAM	DDR	—	DRAM_CS0_B	Output	100 kΩ pull-up
DRAM_CS1_B	D3	NVCC_DRAM	DDR	—	DRAM_CS1_B	Output	100 kΩ pull-up
DRAM_DATA00	R1	NVCC_DRAM	DDR	—	DRAM_DATA00	Input	100 kΩ pull-up
DRAM_DATA01	T2	NVCC_DRAM	DDR	—	DRAM_DATA01	Input	100 kΩ pull-up
DRAM_DATA02	T1	NVCC_DRAM	DDR	—	DRAM_DATA02	Input	100 kΩ pull-up
DRAM_DATA03	R2	NVCC_DRAM	DDR	—	DRAM_DATA03	Input	100 kΩ pull-up
DRAM_DATA04	M1	NVCC_DRAM	DDR	—	DRAM_DATA04	Input	100 kΩ pull-up
DRAM_DATA05	M2	NVCC_DRAM	DDR	—	DRAM_DATA05	Input	100 kΩ pull-up
DRAM_DATA06	L2	NVCC_DRAM	DDR	—	DRAM_DATA06	Input	100 kΩ pull-up
DRAM_DATA07	N1	NVCC_DRAM	DDR	—	DRAM_DATA07	Input	100 kΩ pull-up
DRAM_DATA08	H1	NVCC_DRAM	DDR	—	DRAM_DATA08	Input	100 kΩ pull-up
DRAM_DATA09	F2	NVCC_DRAM	DDR	—	DRAM_DATA09	Input	100 kΩ pull-up
DRAM_DATA10	K2	NVCC_DRAM	DDR	—	DRAM_DATA10	Input	100 kΩ pull-up
DRAM_DATA11	J2	NVCC_DRAM	DDR	—	DRAM_DATA11	Input	100 kΩ pull-up
DRAM_DATA12	J1	NVCC_DRAM	DDR	—	DRAM_DATA12	Input	100 kΩ pull-up
DRAM_DATA13	F1	NVCC_DRAM	DDR	—	DRAM_DATA13	Input	100 kΩ pull-up
DRAM_DATA14	E2	NVCC_DRAM	DDR	—	DRAM_DATA14	Input	100 kΩ pull-up

Table 117. 17x17 WP (with PCIe) Functional Contact Assignments (continued)

Ball Name	17x17 WP Ball	Power Group	Ball Type	Out of Reset Condition			
				Default Mode	Default Function	Input/ Output	Value
DRAM_DATA15	E1	NVCC_DRAM	DDR	—	DRAM_DATA15	Input	100 kΩ pull-up
DRAM_DATA16	V1	NVCC_DRAM	DDR	—	DRAM_DATA16	Input	100 kΩ pull-up
DRAM_DATA17	W4	NVCC_DRAM	DDR	—	DRAM_DATA17	Input	100 kΩ pull-up
DRAM_DATA18	Y4	NVCC_DRAM	DDR	—	DRAM_DATA18	Input	100 kΩ pull-up
DRAM_DATA19	U2	NVCC_DRAM	DDR	—	DRAM_DATA19	Input	100 kΩ pull-up
DRAM_DATA20	W3	NVCC_DRAM	DDR	—	DRAM_DATA20	Input	100 kΩ pull-up
DRAM_DATA21	Y2	NVCC_DRAM	DDR	—	DRAM_DATA21	Input	100 kΩ pull-up
DRAM_DATA22	U1	NVCC_DRAM	DDR	—	DRAM_DATA22	Input	100 kΩ pull-up
DRAM_DATA23	V2	NVCC_DRAM	DDR	—	DRAM_DATA23	Input	100 kΩ pull-up
DRAM_DATA24	A2	NVCC_DRAM	DDR	—	DRAM_DATA24	Input	100 kΩ pull-up
DRAM_DATA25	D1	NVCC_DRAM	DDR	—	DRAM_DATA25	Input	100 kΩ pull-up
DRAM_DATA26	C1	NVCC_DRAM	DDR	—	DRAM_DATA26	Input	100 kΩ pull-up
DRAM_DATA27	D2	NVCC_DRAM	DDR	—	DRAM_DATA27	Input	100 kΩ pull-up
DRAM_DATA28	C2	NVCC_DRAM	DDR	—	DRAM_DATA28	Input	100 kΩ pull-up
DRAM_DATA29	B3	NVCC_DRAM	DDR	—	DRAM_DATA29	Input	100 kΩ pull-up
DRAM_DATA30	B4	NVCC_DRAM	DDR	—	DRAM_DATA30	Input	100 kΩ pull-up
DRAM_DATA31	A4	NVCC_DRAM	DDR	—	DRAM_DATA31	Input	100 kΩ pull-up
DRAM_DQM0	N2	NVCC_DRAM	DDR	—	DRAM_DQM0	Output	100 kΩ pull-up
DRAM_DQM1	G2	NVCC_DRAM	DDR	—	DRAM_DQM1	Output	100 kΩ pull-up

Table 117. 17x17 WP (with PCIe) Functional Contact Assignments (continued)

Ball Name	17x17 WP Ball	Power Group	Ball Type	Out of Reset Condition			
				Default Mode	Default Function	Input/ Output	Value
DRAM_DQM2	Y3	NVCC_DRAM	DDR	—	DRAM_DQM2	Output	100 kΩ pull-up
DRAM_DQM3	A3	NVCC_DRAM	DDR	—	DRAM_DQM3	Output	100 kΩ pull-up
DRAM_ODT0	U3	NVCC_DRAM	DDR	—	DRAM_ODT0	Output	100 kΩ pull-down
DRAM_RAS_B	H5	NVCC_DRAM	DDR	—	DRAM_RAS_B	Output	100 kΩ pull-up
DRAM_RESET	D4	NVCC_DRAM	DDR	—	DRAM_RESET	Output	100 kΩ pull-down
DRAM_SDBA0	G3	NVCC_DRAM	DDR	—	DRAM_SDBA0	Output	100 kΩ pull-up
DRAM_SDBA1	P3	NVCC_DRAM	DDR	—	DRAM_SDBA1	Output	100 kΩ pull-up
DRAM_SDBA2	K4	NVCC_DRAM	DDR	—	DRAM_SDBA2	Output	100 kΩ pull-up
DRAM_SDCKE0	P5	NVCC_DRAM	DDR	—	DRAM_SDCKE0	Output	100 kΩ pull-down
DRAM_SDCKE1	E4	NVCC_DRAM	DDR	—	DRAM_SDCKE1	Output	100 kΩ pull-down
DRAM_SDCLK0_N	L1	NVCC_DRAM	DDRCLK	—	DRAM_SDCLK0_N	—	—
DRAM_SDCLK0_P	K1	NVCC_DRAM	DDRCLK	—	DRAM_SDCLK0_P	Output	Low
DRAM_SDQS0_N	P2	NVCC_DRAM	DDRCLK	—	DRAM_SDQS0_N	—	—
DRAM_SDQS0_P	P1	NVCC_DRAM	DDRCLK	—	DRAM_SDQS0_P	Input	—
DRAM_SDQS1_N	H2	NVCC_DRAM	DDRCLK	—	DRAM_SDQS1_N	—	—
DRAM_SDQS1_P	G1	NVCC_DRAM	DDRCLK	—	DRAM_SDQS1_P	Input	—
DRAM_SDQS2_N	W1	NVCC_DRAM	DDRCLK	—	DRAM_SDQS2_N	—	—
DRAM_SDQS2_P	W2	NVCC_DRAM	DDRCLK	—	DRAM_SDQS2_P	Input	—
DRAM_SDQS3_N	B2	NVCC_DRAM	DDRCLK	—	DRAM_SDQS3_N	—	—
DRAM_SDQS3_P	B1	NVCC_DRAM	DDRCLK	—	DRAM_SDQS3_P	Input	—
DRAM_SDWE_B	J5	NVCC_DRAM	DDR	—	DRAM_SDWE_B	Output	100 kΩ pull-up
ENET1_COL	B5	NVCC_ENET	GPIO	ALT5	GPIO2_IO00	Input	Keeper
ENET1_CRS	C6	NVCC_ENET	GPIO	ALT5	GPIO2_IO01	Input	Keeper
ENET1_MDC	B6	NVCC_ENET	GPIO	ALT5	GPIO2_IO02	Input	Keeper

Table 117. 17x17 WP (with PCIe) Functional Contact Assignments (continued)

Ball Name	17x17 WP Ball	Power Group	Ball Type	Out of Reset Condition			
				Default Mode	Default Function	Input/ Output	Value
ENET1_MDIO	A6	NVCC_ENET	GPIO	ALT5	GPIO2_IO03	Input	Keeper
ENET1_RX_CLK	A5	NVCC_ENET	GPIO	ALT5	GPIO2_IO04	Input	Keeper
ENET1_TX_CLK	F7	NVCC_ENET	GPIO	ALT5	GPIO2_IO05	Input	Keeper
ENET2_COL	E7	NVCC_ENET	GPIO	ALT5	GPIO2_IO06	Input	Keeper
ENET2_CRS	E6	NVCC_ENET	GPIO	ALT5	GPIO2_IO07	Input	Keeper
ENET2_RX_CLK	E5	NVCC_ENET	GPIO	ALT5	GPIO2_IO08	Input	Keeper
ENET2_TX_CLK	D5	NVCC_ENET	GPIO	ALT5	GPIO2_IO09	Input	Keeper
GPIO1_IO00	C19	NVCC_GPIO	GPIO	ALT5	GPIO1_IO00	Input	Keeper
GPIO1_IO01	D19	NVCC_GPIO	GPIO	ALT5	GPIO1_IO01	Input	Keeper
GPIO1_IO02	C20	NVCC_GPIO	GPIO	ALT5	GPIO1_IO02	Input	Keeper
GPIO1_IO03	D20	NVCC_GPIO	GPIO	ALT5	GPIO1_IO03	Input	Keeper
GPIO1_IO04	A18	NVCC_GPIO	GPIO	ALT5	GPIO1_IO04	Input	Keeper
GPIO1_IO05	B18	NVCC_GPIO	GPIO	ALT5	GPIO1_IO05	Input	Keeper
GPIO1_IO06	D18	NVCC_GPIO	GPIO	ALT5	GPIO1_IO06	Input	Keeper
GPIO1_IO07	A17	NVCC_GPIO	GPIO	ALT5	GPIO1_IO07	Input	Keeper
GPIO1_IO08	B17	NVCC_GPIO	GPIO	ALT5	GPIO1_IO08	Input	Keeper
GPIO1_IO09	A19	NVCC_GPIO	GPIO	ALT5	GPIO1_IO09	Input	Keeper
GPIO1_IO10	B19	NVCC_GPIO	GPIO	ALT5	GPIO1_IO10	Input	Keeper
GPIO1_IO11	B20	NVCC_GPIO	GPIO	ALT5	GPIO1_IO11	Input	Keeper
GPIO1_IO12	B16	NVCC_GPIO	GPIO	ALT5	GPIO1_IO12	Input	Keeper
GPIO1_IO13	A16	NVCC_GPIO	GPIO	ALT5	GPIO1_IO13	Input	Keeper
JTAG_MOD	R7	NVCC_JTAG	GPIO	—	JTAG_MOD	Input	100 kΩ pull-up
JTAG_TCK	R9	NVCC_JTAG	GPIO	—	JTAG_TCK	Input	47 kΩ pull-up
JTAG_TDI	R10	NVCC_JTAG	GPIO	—	JTAG_TDI	Input	47 kΩ pull-up
JTAG_TDO	R8	NVCC_JTAG	GPIO	—	JTAG_TDO	Output	Keeper
JTAG_TMS	T10	NVCC_JTAG	GPIO	—	JTAG_TMS	Input	47 kΩ pull-up
JTAG_TRST_B	T9	NVCC_JTAG	GPIO	—	JTAG_TRST_B	Input	47 kΩ pull-up
KEY_COL0	G20	NVCC_KEY	GPIO	ALT5	GPIO2_IO10	Input	Keeper

Table 117. 17x17 WP (with PCIe) Functional Contact Assignments (continued)

Ball Name	17x17 WP Ball	Power Group	Ball Type	Out of Reset Condition			
				Default Mode	Default Function	Input/ Output	Value
KEY_COL1	F20	NVCC_KEY	GPIO	ALT5	GPIO2_IO11	Input	Keeper
KEY_COL2	G18	NVCC_KEY	GPIO	ALT5	GPIO2_IO12	Input	Keeper
KEY_COL3	E20	NVCC_KEY	GPIO	ALT5	GPIO2_IO13	Input	Keeper
KEY_COL4	E19	NVCC_KEY	GPIO	ALT5	GPIO2_IO14	Input	Keeper
KEY_ROW0	F16	NVCC_KEY	GPIO	ALT5	GPIO2_IO15	Input	Keeper
KEY_ROW1	E18	NVCC_KEY	GPIO	ALT5	GPIO2_IO16	Input	Keeper
KEY_ROW2	F18	NVCC_KEY	GPIO	ALT5	GPIO2_IO17	Input	Keeper
KEY_ROW3	F19	NVCC_KEY	GPIO	ALT5	GPIO2_IO18	Input	Keeper
KEY_ROW4	G19	NVCC_KEY	GPIO	ALT5	GPIO2_IO19	Input	Keeper
LCD1_CLK	L17	NVCC_LCD1	GPIO	ALT5	GPIO3_IO00	Input	Keeper
LCD1_DATA00	M20	NVCC_LCD1	GPIO	ALT5	GPIO3_IO01	Input	Keeper
LCD1_DATA01	L18	NVCC_LCD1	GPIO	ALT5	GPIO3_IO02	Input	Keeper
LCD1_DATA02	M19	NVCC_LCD1	GPIO	ALT5	GPIO3_IO03	Input	Keeper
LCD1_DATA03	M18	NVCC_LCD1	GPIO	ALT5	GPIO3_IO04	Input	Keeper
LCD1_DATA04	N17	NVCC_LCD1	GPIO	ALT5	GPIO3_IO05	Input	Keeper
LCD1_DATA05	M16	NVCC_LCD1	GPIO	ALT5	GPIO3_IO06	Input	Keeper
LCD1_DATA06	M15	NVCC_LCD1	GPIO	ALT5	GPIO3_IO07	Input	Keeper
LCD1_DATA07	L20	NVCC_LCD1	GPIO	ALT5	GPIO3_IO08	Input	Keeper
LCD1_DATA08	K18	NVCC_LCD1	GPIO	ALT5	GPIO3_IO09	Input	Keeper
LCD1_DATA09	L16	NVCC_LCD1	GPIO	ALT5	GPIO3_IO10	Input	Keeper
LCD1_DATA10	L19	NVCC_LCD1	GPIO	ALT5	GPIO3_IO11	Input	Keeper
LCD1_DATA11	L15	NVCC_LCD1	GPIO	ALT5	GPIO3_IO12	Input	Keeper
LCD1_DATA12	K16	NVCC_LCD1	GPIO	ALT5	GPIO3_IO13	Input	Keeper
LCD1_DATA13	K15	NVCC_LCD1	GPIO	ALT5	GPIO3_IO14	Input	Keeper
LCD1_DATA14	K17	NVCC_LCD1	GPIO	ALT5	GPIO3_IO15	Input	Keeper
LCD1_DATA15	H16	NVCC_LCD1	GPIO	ALT5	GPIO3_IO16	Input	Keeper
LCD1_DATA16	H20	NVCC_LCD1	GPIO	ALT5	GPIO3_IO17	Input	Keeper
LCD1_DATA17	K19	NVCC_LCD1	GPIO	ALT5	GPIO3_IO18	Input	Keeper
LCD1_DATA18	K20	NVCC_LCD1	GPIO	ALT5	GPIO3_IO19	Input	Keeper
LCD1_DATA19	J20	NVCC_LCD1	GPIO	ALT5	GPIO3_IO20	Input	Keeper
LCD1_DATA20	H17	NVCC_LCD1	GPIO	ALT5	GPIO3_IO21	Input	Keeper

Table 117. 17x17 WP (with PCIe) Functional Contact Assignments (continued)

Ball Name	17x17 WP Ball	Power Group	Ball Type	Out of Reset Condition			
				Default Mode	Default Function	Input/ Output	Value
LCD1_DATA21	G17	NVCC_LCD1	GPIO	ALT5	GPIO3_IO22	Input	Keeper
LCD1_DATA22	H19	NVCC_LCD1	GPIO	ALT5	GPIO3_IO23	Input	Keeper
LCD1_DATA23	G16	NVCC_LCD1	GPIO	ALT5	GPIO3_IO24	Input	Keeper
LCD1_ENABLE	J19	NVCC_LCD1	GPIO	ALT5	GPIO3_IO25	Input	Keeper
LCD1_HSYNC	J16	NVCC_LCD1	GPIO	ALT5	GPIO3_IO26	Input	Keeper
LCD1_RESET	J18	NVCC_LCD1	GPIO	ALT5	GPIO3_IO27	Input	Keeper
LCD1_VSYNC	J15	NVCC_LCD1	GPIO	ALT5	GPIO3_IO28	Input	Keeper
NAND_ALE	W6	NVCC_NAND	GPIO	ALT5	GPIO4_IO00	Input	Keeper
NAND_CE0_B	U7	NVCC_NAND	GPIO	ALT5	GPIO4_IO01	Input	Keeper
NAND_CE1_B	V9	NVCC_NAND	GPIO	ALT5	GPIO4_IO02	Input	Keeper
NAND_CLE	T8	NVCC_NAND	GPIO	ALT5	GPIO4_IO03	Input	Keeper
NAND_DATA00	V6	NVCC_NAND	GPIO	ALT5	GPIO4_IO04	Input	Keeper
NAND_DATA01	W8	NVCC_NAND	GPIO	ALT5	GPIO4_IO05	Input	Keeper
NAND_DATA02	Y7	NVCC_NAND	GPIO	ALT5	GPIO4_IO06	Input	Keeper
NAND_DATA03	U5	NVCC_NAND	GPIO	ALT5	GPIO4_IO07	Input	Keeper
NAND_DATA04	W7	NVCC_NAND	GPIO	ALT5	GPIO4_IO08	Input	Keeper
NAND_DATA05	T5	NVCC_NAND	GPIO	ALT5	GPIO4_IO09	Input	Keeper
NAND_DATA06	Y8	NVCC_NAND	GPIO	ALT5	GPIO4_IO10	Input	Keeper
NAND_DATA07	T6	NVCC_NAND	GPIO	ALT5	GPIO4_IO11	Input	Keeper
NAND_RE_B	U8	NVCC_NAND	GPIO	ALT5	GPIO4_IO12	Input	Keeper
NAND_READY_B	Y6	NVCC_NAND	GPIO	ALT5	GPIO4_IO13	Input	Keeper
NAND_WE_B	T7	NVCC_NAND	GPIO	ALT5	GPIO4_IO14	Input	Keeper
NAND_WP_B	V7	NVCC_NAND	GPIO	ALT5	GPIO4_IO15	Input	Keeper
ONOFF	N15	VDD_SNVS_IN	GPIO	—	ONOFF	Input	100 kΩ pull-up
PCIE_RX_N	P19	PCIE_VPH	—	—	PCIE_RX_N	—	—
PCIE_RX_P	P20	PCIE_VPH	—	—	PCIE_RX_P	—	—
PCIE_TX_N	R19	PCIE_VPH	—	—	PCIE_TX_N	—	—
PCIE_TX_P	R20	PCIE_VPH	—	—	PCIE_TX_P	—	—
POR_B	P14	VDD_SNVS_IN	GPIO	—	POR_B	Input	100 kΩ pull-up
QSPI1A_DATA0	E15	NVCC_QSPI	GPIO	ALT5	GPIO4_IO16	Input	Keeper

Table 117. 17x17 WP (with PCIe) Functional Contact Assignments (continued)

Ball Name	17x17 WP Ball	Power Group	Ball Type	Out of Reset Condition			
				Default Mode	Default Function	Input/ Output	Value
QSPI1A_DATA1	C15	NVCC_QSPI	GPIO	ALT5	GPIO4_IO17	Input	Keeper
QSPI1A_DATA2	D14	NVCC_QSPI	GPIO	ALT5	GPIO4_IO18	Input	Keeper
QSPI1A_DATA3	E16	NVCC_QSPI	GPIO	ALT5	GPIO4_IO19	Input	Keeper
QSPI1A_DQS	A13	NVCC_QSPI	GPIO	ALT5	GPIO4_IO20	Input	Keeper
QSPI1A_SCLK	D17	NVCC_QSPI	GPIO	ALT5	GPIO4_IO21	Input	Keeper
QSPI1A_SS0_B	C17	NVCC_QSPI	GPIO	ALT5	GPIO4_IO22	Input	Keeper
QSPI1A_SS1_B	E17	NVCC_QSPI	GPIO	ALT5	GPIO4_IO23	Input	Keeper
QSPI1B_DATA0	B14	NVCC_QSPI	GPIO	ALT5	GPIO4_IO24	Input	Keeper
QSPI1B_DATA1	A14	NVCC_QSPI	GPIO	ALT5	GPIO4_IO25	Input	Keeper
QSPI1B_DATA2	D13	NVCC_QSPI	GPIO	ALT5	GPIO4_IO26	Input	Keeper
QSPI1B_DATA3	C13	NVCC_QSPI	GPIO	ALT5	GPIO4_IO27	Input	Keeper
QSPI1B_DQS	B13	NVCC_QSPI	GPIO	ALT5	GPIO4_IO28	Input	Keeper
QSPI1B_SCLK	B15	NVCC_QSPI	GPIO	ALT5	GPIO4_IO29	Input	Keeper
QSPI1B_SS0_B	C14	NVCC_QSPI	GPIO	ALT5	GPIO4_IO30	Input	Keeper
QSPI1B_SS1_B	A15	NVCC_QSPI	GPIO	ALT5	GPIO4_IO31	Input	Keeper
RGMII1_RD0	D8	NVCC_RGMII1	GPIO	ALT5	GPIO5_IO00	Input	Keeper
RGMII1_RD1	C9	NVCC_RGMII1	GPIO	ALT5	GPIO5_IO01	Input	Keeper
RGMII1_RD2	D7	NVCC_RGMII1	GPIO	ALT5	GPIO5_IO02	Input	Keeper
RGMII1_RD3	E8	NVCC_RGMII1	GPIO	ALT5	GPIO5_IO03	Input	Keeper
RGMII1_RX_CTL	C10	NVCC_RGMII1	GPIO	ALT5	GPIO5_IO04	Input	Keeper
RGMII1_RXC	E9	NVCC_RGMII1	GPIO	ALT5	GPIO5_IO05	Input	Keeper
RGMII1_TD0	D11	NVCC_RGMII1	GPIO	ALT5	GPIO5_IO06	Input	Keeper
RGMII1_TD1	C12	NVCC_RGMII1	GPIO	ALT5	GPIO5_IO07	Input	Keeper
RGMII1_TD2	E11	NVCC_RGMII1	GPIO	ALT5	GPIO5_IO08	Input	Keeper
RGMII1_TD3	D10	NVCC_RGMII1	GPIO	ALT5	GPIO5_IO09	Input	Keeper
RGMII1_TX_CTL	E10	NVCC_RGMII1	GPIO	ALT5	GPIO5_IO10	Input	Keeper
RGMII1_TXC	C11	NVCC_RGMII1	GPIO	ALT5	GPIO5_IO11	Input	Keeper
RGMII2_RD0	A8	NVCC_RGMII2	GPIO	ALT5	GPIO5_IO12	Input	Keeper
RGMII2_RD1	B8	NVCC_RGMII2	GPIO	ALT5	GPIO5_IO13	Input	Keeper
RGMII2_RD2	A7	NVCC_RGMII2	GPIO	ALT5	GPIO5_IO14	Input	Keeper
RGMII2_RD3	B7	NVCC_RGMII2	GPIO	ALT5	GPIO5_IO15	Input	Keeper

Table 117. 17x17 WP (with PCIe) Functional Contact Assignments (continued)

Ball Name	17x17 WP Ball	Power Group	Ball Type	Out of Reset Condition			
				Default Mode	Default Function	Input/ Output	Value
RGMII2_RX_CTL	B9	NVCC_RGMII2	GPIO	ALT5	GPIO5_IO16	Input	Keeper
RGMII2_RXC	A9	NVCC_RGMII2	GPIO	ALT5	GPIO5_IO17	Input	Keeper
RGMII2_TD0	A11	NVCC_RGMII2	GPIO	ALT5	GPIO5_IO18	Input	Keeper
RGMII2_TD1	B11	NVCC_RGMII2	GPIO	ALT5	GPIO5_IO19	Input	Keeper
RGMII2_TD2	A12	NVCC_RGMII2	GPIO	ALT5	GPIO5_IO20	Input	Keeper
RGMII2_TD3	B12	NVCC_RGMII2	GPIO	ALT5	GPIO5_IO21	Input	Keeper
RGMII2_TX_CTL	B10	NVCC_RGMII2	GPIO	ALT5	GPIO5_IO22	Input	Keeper
RGMII2_TXC	A10	NVCC_RGMII2	GPIO	ALT5	GPIO5_IO23	Input	Keeper
RTC_XTALI	W19	VDD_SNVS_CAP	—	—	RTC_XTALI	—	—
RTC_XTALO	Y19	VDD_SNVS_CAP	—	—	RTC_XTALO	—	—
SD2_CLK	E12	NVCC_SD2	GPIO	ALT5	GPIO6_IO06	Input	Keeper
SD2_CMD	F12	NVCC_SD2	GPIO	ALT5	GPIO6_IO07	Input	Keeper
SD2_DATA0	E13	NVCC_SD2	GPIO	ALT5	GPIO6_IO08	Input	Keeper
SD2_DATA1	E14	NVCC_SD2	GPIO	ALT5	GPIO6_IO09	Input	Keeper
SD2_DATA2	F10	NVCC_SD2	GPIO	ALT5	GPIO6_IO10	Input	Keeper
SD2_DATA3	F11	NVCC_SD2	GPIO	ALT5	GPIO6_IO11	Input	Keeper
SD3_CLK	V11	NVCC_LOW NVCC_HIGH	GPIO	ALT5	GPIO7_IO00	Input	100 kΩ pull-down
SD3_CMD	T13	NVCC_LOW NVCC_HIGH	GPIO	ALT5	GPIO7_IO01	Input	100 kΩ pull-down
SD3_DATA0	U10	NVCC_LOW NVCC_HIGH	GPIO	ALT5	GPIO7_IO02	Input	100 kΩ pull-down
SD3_DATA1	T11	NVCC_LOW NVCC_HIGH	GPIO	ALT5	GPIO7_IO03	Input	100 kΩ pull-down
SD3_DATA2	U14	NVCC_LOW NVCC_HIGH	GPIO	ALT5	GPIO7_IO04	Input	100 kΩ pull-down
SD3_DATA3	V14	NVCC_LOW NVCC_HIGH	GPIO	ALT5	GPIO7_IO05	Input	100 kΩ pull-down
SD3_DATA4	T14	NVCC_LOW NVCC_HIGH	GPIO	ALT5	GPIO7_IO06	Input	100 kΩ pull-down
SD3_DATA5	U13	NVCC_LOW NVCC_HIGH	GPIO	ALT5	GPIO7_IO07	Input	100 kΩ pull-down
SD3_DATA6	V12	NVCC_LOW NVCC_HIGH	GPIO	ALT5	GPIO7_IO08	Input	100 kΩ pull-down

Table 117. 17x17 WP (with PCIe) Functional Contact Assignments (continued)

Ball Name	17x17 WP Ball	Power Group	Ball Type	Out of Reset Condition			
				Default Mode	Default Function	Input/ Output	Value
SD3_DATA7	U11	NVCC_LOW NVCC_HIGH	GPIO	ALT5	GPIO7_IO09	Input	100 kΩ pull-down
SD4_CLK	W11	NVCC_SD4	GPIO	ALT5	GPIO6_IO12	Input	Keeper
SD4_CMD	W12	NVCC_SD4	GPIO	ALT5	GPIO6_IO13	Input	Keeper
SD4_DATA0	Y9	NVCC_SD4	GPIO	ALT5	GPIO6_IO14	Input	Keeper
SD4_DATA1	W9	NVCC_SD4	GPIO	ALT5	GPIO6_IO15	Input	Keeper
SD4_DATA2	Y13	NVCC_SD4	GPIO	ALT5	GPIO6_IO16	Input	Keeper
SD4_DATA3	W13	NVCC_SD4	GPIO	ALT5	GPIO6_IO17	Input	Keeper
SD4_DATA4	Y12	NVCC_SD4	GPIO	ALT5	GPIO6_IO18	Input	Keeper
SD4_DATA5	Y11	NVCC_SD4	GPIO	ALT5	GPIO6_IO19	Input	Keeper
SD4_DATA6	Y10	NVCC_SD4	GPIO	ALT5	GPIO6_IO20	Input	Keeper
SD4_DATA7	W10	NVCC_SD4	GPIO	ALT5	GPIO6_IO21	Input	Keeper
SD4_RESET_B	T12	NVCC_SD4	GPIO	ALT5	GPIO6_IO22	Input	Keeper
SNVS_PMIC_ON_REQ	N16	VDD_SNVS_IN	GPIO	—	SNVS_PMIC_ON_REQ	Output	100 kΩ pull-up
SNVS_TAMPER	R14	VDD_SNVS_IN	GPIO	—	SNVS_TAMPER	Input	100 kΩ pull-down
TEST_MODE	N14	VDD_SNVS_IN	—	—	TEST_MODE	Input	100 kΩ pull-down
USB_H_DATA	Y5	NVCC_USB_H	GPIO	ALT5	GPIO7_IO10	Input	100 kΩ pull-down
USB_H_STROBE	W5	NVCC_USB_H	GPIO	ALT5	GPIO7_IO11	Input	100 kΩ pull-down
USB_OTG1_CHD_B	T17	VDD_USB_CAP	—	—	USB_OTG1_CHD_B	—	—
USB_OTG1_DN	W17	VDD_USB_CAP	—	—	USB_OTG1_DN	—	—
USB_OTG1_DP	Y17	VDD_USB_CAP	—	—	USB_OTG1_DP	—	—
USB_OTG2_DN	W15	VDD_USB_CAP	—	—	USB_OTG2_DN	—	—
USB_OTG2_DP	Y15	VDD_USB_CAP	—	—	USB_OTG2_DP	—	—
XTALI	V19	NVCC_PLL	—	—	XTALI	—	—
XTALO	V20	NVCC_PLL	—	—	XTALO	—	—

6.4.6 17x17 mm WP (with PCIe), 0.8 mm Pitch, 20x20 Ball Map

Table 118. 17x17 mm WP (with PCIe), 0.8 mm Pitch, 20x20 Ball Map

	A	B	C	D	E	F	G
1	VSS	DRAM_SDQS3_P	DRAM_DATA26	DRAM_DATA25	DRAM_DATA15	DRAM_DATA13	DRAM_SDQS1_P
2	DRAM_DATA24	DRAM_SDQS3_N	DRAM_DATA28	DRAM_DATA27	DRAM_DATA14	DRAM_DATA09	DRAM_DQM1
3	DRAM_DQM3	DRAM_DATA29	VSS	DRAM_CS1_B	VSS	VSS	DRAM_SDBA0
4	DRAM_DATA31	DRAM_DATA30	VSS	DRAM_RESET	DRAM_SDCKE1	DRAM_ADDR07	DRAM_ADDR05
5	ENET1_RX_CLK	ENET1_COL	DRAM_ZQPAD	ENET2_TX_CLK	ENET2_RX_CLK	VSS	DRAM_ADDR03
6	ENET1_MDIO	ENET1_MDC	ENET1_CRS	VSS	ENET2_CRS	NVCC_ENET	NVCC_DRAM
7	RGMII2_RD2	RGMII2_RD3	VDD_SOC_IN	RGMII1_RD2	ENET2_COL	ENET1_TX_CLK	VSS
8	RGMII2_RD0	RGMII2_RD1	VDD_SOC_IN	RGMII1_RD0	RGMII1_RD3	NVCC_RGMII1	VSS
9	RGMII2_RXC	RGMII2_RX_CTL	RGMII1_RD1	VSS	RGMII1_RXC	NVCC_RGMII2	VSS
10	RGMII2_TXC	RGMII2_TX_CTL	RGMII1_RX_CTL	RGMII1_TD3	RGMII1_TX_CTL	SD2_DATA2	VSS
11	RGMII2_TD0	RGMII2_TD1	RGMII1_TXC	RGMII1_TD0	RGMII1_TD2	SD2_DATA3	VSS
12	RGMII2_TD2	RGMII2_TD3	RGMII1_TD1	VSS	SD2_CLK	SD2_CMD	VSS
13	QSPI1A_DQS	QSPI1B_DQS	QSPI1B_DATA3	QSPI1B_DATA2	SD2_DATA0	NVCC_SD2	VSS
14	QSPI1B_DATA1	QSPI1B_DATA0	QSPI1B_SS0_B	QSPI1A_DATA2	SD2_DATA1	NVCC_QSPI	VSS
15	QSPI1B_SS1_B	QSPI1B_SCLK	QSPI1A_DATA1	VSS	QSPI1A_DATA0	NVCC_GPIO	NVCC_KEY
16	GPIO1_IO13	GPIO1_IO12	VDD_ARM_CAP	VDD_ARM_CAP	QSPI1A_DATA3	KEY_ROW0	LCD1_DATA23
17	GPIO1_IO07	GPIO1_IO08	QSPI1A_SS0_B	QSPI1A_SCLK	QSPI1A_SS1_B	VSS	LCD1_DATA21
18	GPIO1_IO04	GPIO1_IO05	VSS	GPIO1_IO06	KEY_ROW1	KEY_ROW2	KEY_COL2
19	GPIO1_IO09	GPIO1_IO10	GPIO1_IO00	GPIO1_IO01	KEY_COL4	KEY_ROW3	KEY_ROW4
20	VSS	GPIO1_IO11	GPIO1_IO02	GPIO1_IO03	KEY_COL3	KEY_COL1	KEY_COL0
	A	B	C	D	E	F	G

Table 118. 17x17 mm WP (with PCIe), 0.8 mm Pitch, 20x20 Ball Map (continued)

N	M	L	K	J	H	
DRAM_DATA07	DRAM_DATA04	DRAM_SDCLK0_N	DRAM_SDCLK0_P	DRAM_DATA12	DRAM_DATA08	1
DRAM_DQM0	DRAM_DATA05	DRAM_DATA06	DRAM_DATA10	DRAM_DATA11	DRAM_SDQS1_N	2
VSS	DRAM_ADDR04	VSS	VSS	DRAM_VREF	VSS	3
DRAM_ADDR11	DRAM_ADDR13	DRAM_ADDR00	DRAM_SDBA2	DRAM_CAS_B	DRAM_CS0_B	4
DRAM_ADDR10	DRAM_ADDR08	DRAM_ADDR09	DRAM_ADDR02	DRAM_SDWE_B	DRAM_RAS_B	5
NVCC_DRAM	NVCC_DRAM	NVCC_DRAM	NVCC_DRAM	NVCC_DRAM	NVCC_DRAM	6
VSS	VSS	VSS	NVCC_DRAM_2P5	VSS	VSS	7
VDD_SOC_CAP	VDD_SOC_CAP	VDD_SOC_CAP	VDD_SOC_CAP	VDD_SOC_CAP	VDD_SOC_CAP	8
VDD_SOC_CAP	VDD_SOC_IN	VDD_SOC_IN	VDD_SOC_IN	VDD_SOC_IN	VDD_SOC_CAP	9
VDD_SOC_CAP	VDD_SOC_IN	VSS	VSS	VDD_ARM_IN	VDD_ARM_CAP	10
VDD_SOC_CAP	VDD_SOC_IN	VSS	VSS	VDD_ARM_IN	VDD_ARM_CAP	11
VDD_SOC_CAP	VDD_SOC_IN	VDD_ARM_IN	VDD_ARM_IN	VDD_ARM_IN	VDD_ARM_CAP	12
VSS	VDD_SOC_CAP	VDD_ARM_CAP	VDD_ARM_CAP	VDD_ARM_CAP	VDD_ARM_CAP	13
TEST_MODE	VSS	VSS	VSS	VSS	VSS	14
ONOFF	LCD1_DATA06	LCD1_DATA11	LCD1_DATA13	LCD1_VSYNC	NVCC_LCD1	15
SNVS_PMIC_ON_REQ	LCD1_DATA05	LCD1_DATA09	LCD1_DATA12	LCD1_HSYNC	LCD1_DATA15	16
LCD1_DATA04	VSS	LCD1_CLK	LCD1_DATA14	VSS	LCD1_DATA20	17
PCIE_REXT	LCD1_DATA03	LCD1_DATA01	LCD1_DATA08	LCD1_RESET	VDD_ARM_IN	18
VSS	LCD1_DATA02	LCD1_DATA10	LCD1_DATA17	LCD1_ENABLE	LCD1_DATA22	19
VSS	LCD1_DATA00	LCD1_DATA07	LCD1_DATA18	LCD1_DATA19	LCD1_DATA16	20
N	M	L	K	J	H	

Table 118. 17x17 mm WP (with PCIe), 0.8 mm Pitch, 20x20 Ball Map (continued)

	Y	W	V	U	T	R	P	
1	VSS	DRAM_SDQS2_N	DRAM_DATA16	DRAM_DATA22	DRAM_DATA02	DRAM_DATA00	DRAM_SDQS0_P	1
2	DRAM_DATA21	DRAM_SDQS2_P	DRAM_DATA23	DRAM_DATA19	DRAM_DATA01	DRAM_DATA03	DRAM_SDQS0_N	2
3	DRAM_DQM2	DRAM_DATA20	VSS	DRAM_ODT0	VSS	VSS	DRAM_SDBA1	3
4	DRAM_DATA18	DRAM_DATA17	VSS	DRAM_ADDR01	DRAM_ADDR06	DRAM_ADDR14	DRAM_ADDR12	4
5	USB_H_DATA	USB_H_STROBE	NVCC_USB_H	NAND_DATA03	NAND_DATA05	VSS	DRAM_SDCKE0	5
6	NAND_READY_B	NAND_ALE	NAND_DATA00	VSS	NAND_DATA07	NVCC_NAND	NVCC_DRAM	6
7	NAND_DATA02	NAND_DATA04	NAND_WP_B	NAND_CE0_B	NAND_WE_B	JTAG_MOD	VSS	7
8	NAND_DATA06	NAND_DATA01	VDD_SOC_CAP	NAND_RE_B	NAND_CLE	JTAG_TDO	VSS	8
9	SD4_DATA0	SD4_DATA1	NAND_CE1_B	VSS	JTAG_TRST_B	JTAG_TCK	VSS	9
10	SD4_DATA6	SD4_DATA7	NVCC_SD4	SD3_DATA0	JTAG_TMS	JTAG_TDI	VSS	10
11	SD4_DATA5	SD4_CLK	SD3_CLK	SD3_DATA7	SD3_DATA1	NVCC_JTAG	VSS	11
12	SD4_DATA4	SD4_CMD	SD3_DATA6	VSS	SD4_RESET_B	NVCC_HIGH	VSS	12
13	SD4_DATA2	SD4_DATA3	NVCC_LOW	SD3_DATA5	SD3_CMD	VDDA_ADC_3P3	NGND_KEL0	13
14	ADC1_IN0	ADC1_IN1	SD3_DATA3	SD3_DATA2	SD3_DATA4	SNVS_TAMPER	POR_B	14
15	USB_OTG2_DP	USB_OTG2_DN	VDD_USB_CAP	VSS	USB_OTG2_VBUS	CCM_CLK2	CCM_PMIC_STBY_REQ	15
16	VSS	VSS	VDD_SNVS_CAP	GPANAIO	USB_OTG1_VBUS	CCM_CLK1_P	CCM_CLK1_N	16
17	USB_OTG1_DP	USB_OTG1_DN	VDD_HIGH_CAP	VDD_HIGH_IN	USB_OTG1_CHD_B	VSS	PCIE_VPTX	17
18	VSS	VSS	VDD_HIGH_CAP	VDD_HIGH_IN	VDD_SNVS_IN	PCIE_VPH	PCIE_VP	18
19	RTC_XTALO	RTC_XTALI	XTALI	BOOT_MODE1	VSS	PCIE_TX_N	PCIE_RX_N	19
20	VSS	NVCC_PLL	XTALO	BOOT_MODE0	VSS	PCIE_TX_P	PCIE_RX_P	20
	Y	W	V	U	T	R	P	

6.5 14x14 mm Package Information

6.5.1 14x14 mm, 0.65 mm Pitch, 20x20 Ball Matrix

Figure 87 shows the top, bottom, and side views of the 14×14 mm BGA package.

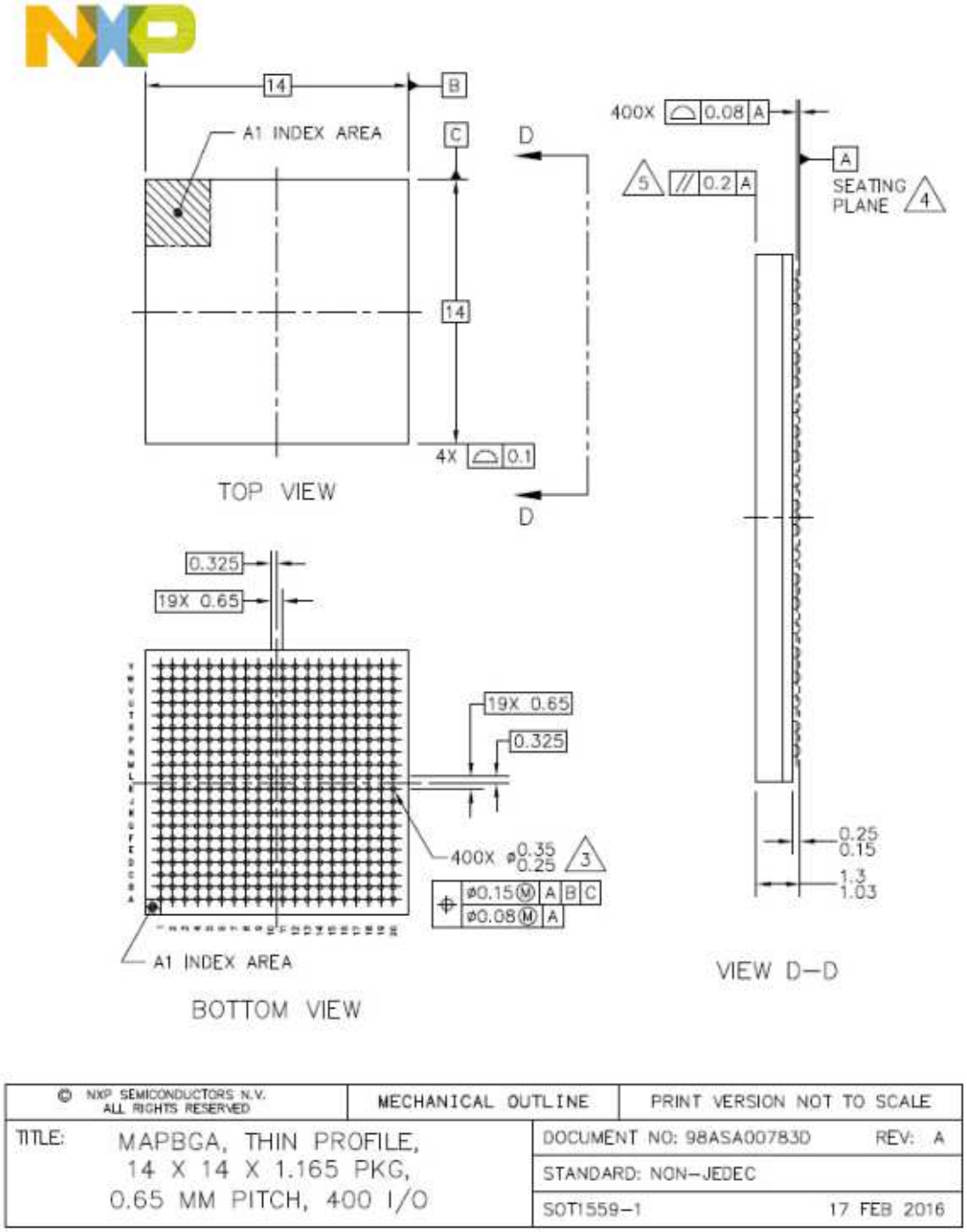

Figure 87. 14x14 mm BGA Package—Top, Bottom, and Side Views

NOTES:

1. ALL DIMENSIONS IN MILLIMETERS.
2. DIMENSIONING AND TOLERANCING PER ASME Y14.5M–1994.
3. MAXIMUM SOLDER BALL DIAMETER MEASURED PARALLEL TO DATUM A.
4. DATUM A, THE SEATING PLANE, IS DETERMINED BY THE SPHERICAL CROWNS OF THE SOLDER BALLS.
5. PARALLELISM MEASUREMENT SHALL EXCLUDE ANY EFFECT OF MARK ON TOP SURFACE OF PACKAGE.

© NXP SEMICONDUCTORS N.V. ALL RIGHTS RESERVED	MECHANICAL OUTLINE	PRINT VERSION NOT TO SCALE
TITLE: MAPBGA, THIN PROFILE, 14 X 14 X 1.165 PKG, 0.65 MM PITCH, 400 I/O	DOCUMENT NO: 98ASA00783D	REV: A
	STANDARD: NON–JEDEC	
	SOT1559–1	17 FEB 2016

Figure 88. 14x14 mm BGA Package Notes

6.5.2 14x14 mm Supplies Contact Assignments and Functional Contact Assignments

Table 119 shows supplies contact assignments for the 14x14 mm package and Table 120 shows the functional contact assignments.

Table 119. 14x14 mm Supplies Contact Assignments

Supply Rail Name	14x14 mm Ball Position(s)	Comments
ADC_VREFH	Y15	ADC high reference voltage
ADC_VREFL	V14	ADC low reference voltage
DRAM_VREF	K4	DDR voltage reference input. Connect to a voltage source that is 50% of NVCC_DRAM.
DRAM_ZQPAD	H2	DDR output buffer driver calibration reference voltage input. Connect DRAM_ZQPAD to an external 240 ohm 1% resistor to Vss.
GPANAIO	P16	Analog output for NXP use only. This output must always be left unconnected.
NVCC_DRAM	G6, H6, J6, K6, L6, M6, N6, P6	Supply input for the DDR I/O interface
NVCC_DRAM_2P5	K7	Supply input for the DDR interface
NVCC_ENET	F6	Supply input for the ENET interfaces
NVCC_GPIO	F15	Supply input for the GPIO interface
NVCC_HIGH	R12	3.3 V Supply input for the dual-voltage I/Os on the SD3 interface
NVCC_JTAG	T9	Supply input for the JTAG interface
NVCC_KEY	G15	Supply input for the Key Pad Port (KPP) interface
NVCC_CSI_LCD1	H15	Supply input for the LCD interface
NVCC_LOW	V13	1.8 V Supply input for the dual-voltage I/Os on the SD3 interface
NVCC_NAND	R6	Supply input for the Raw NAND flash memories interface
NVCC_PLL	U18	Supply input for the PLLs
NVCC_QSPI	F14	Supply input for the QSPI interface
NVCC_RGMII1	F8	Supply input for the RGMII1 interface
NVCC_RGMII2	E11	Supply input for the RGMII2 interface
NVCC_SD1_SD2	F13	Supply input for the SD2 interface
NVCC_SD4	T12	Supply input for the SD4 interface
NVCC_USB_H	V5	Supply input for the USB HSIC interface
NGND_KEL0	T16	Ground
PCIE_VP_CAP	L18	PCIe LDO output. Although this package does not support PCIe, this output requires a 4.7uF capacitor to ground unless the PCIE LDO is disabled.
USB_OTG1_VBUS	W20	VBUS input for USB_OTG1
USB_OTG2_VBUS	U17	VBUS input for USB_OTG2

Table 119. 14x14 mm Supplies Contact Assignments (continued)

Supply Rail Name	14x14 mm Ball Position(s)	Comments
VDD_ARM_CAP	C16, D16, H10, H11, H12, H13, J13, K13, L13	Supply voltage output from internal LDO_ARM. Requires external capacitor(s).
VDD_ARM_IN	H18, J10, J11, J12, K12, L12	Supply voltage input for internal LDO_ARM.
VDD_HIGH_CAP	N17, N18	Supply voltage output from internal LDO_2P5. Requires external capacitor(s).
VDD_HIGH_IN	P17, P18	Supply voltage input to internal LDO_2P5, LDO_1P1 and LDO_SNVS.
VDD_SNVS_CAP	T18	Supply voltage output from internal LDO_SNVS. Requires external capacitor(s).
VDD_SNVS_IN	R18	Supply voltage input to the SNVS voltage domain
VDD_SOC_CAP	H8, H9, J8, K8, L8, M8, M13, N8, N9, N10, N11, N12, V9	Supply voltage output from internal LDO_SOC. Requires external capacitor(s).
VDD_SOC_IN	D7, D8, J9, K9, L9, M9, M10, M11, M12	Supply voltage input to internal LDO_SOC and LDO_PCIE
VDD_USB_CAP	V17	Supply voltage output from internal LDO_USB. Requires external capacitor(s).
VDDA_ADC_3P3	R13	Supply voltage input to the ADC. This supply must be provided even if the ADC is not used.
VSS	A1, A20, C3, C4, C18, D6, D9, D12, D15, E3, F3, F5, F17, G7, G8, G9, G10, G11, G12, G13, G14, H3, H7, H14, J7, J14, J17, K3, K10, K11, K14, L3, L7, L10, L11, L14, M7, M14, M17, N3, N7, N13, P7, P8, P9, P10, P11, P12, R3, R5, R17, R19, R20, T3, U6, U9, U12, U15, U19, U20, V3, V4, V18, W18, Y1, Y18, Y20	Ground

Table 120. 14 x 14 Functional Contact Assignments

Ball Name	14x14 Ball	Power Group	Ball Type	Out of Reset Condition			
				Default Mode	Default Function	Input/ Output	Value
ADC1_IN0	N14	VDDA_ADC_3P3	—	—	ADC1_IN0	Input	—
ADC1_IN1	T15	VDDA_ADC_3P3	—	—	ADC1_IN1	Input	—
ADC1_IN2	W14	VDDA_ADC_3P3	—	—	ADC1_IN2	Input	—
ADC1_IN3	P13	VDDA_ADC_3P3	—	—	ADC1_IN3	Input	—
ADC2_IN0	W15	VDDA_ADC_3P3	—	—	ADC2_IN0	Input	—
ADC2_IN1	R14	VDDA_ADC_3P3	—	—	ADC2_IN1	Input	—
ADC2_IN2	N15	VDDA_ADC_3P3	—	—	ADC2_IN2	Input	—
ADC2_IN3	R15	VDDA_ADC_3P3	—	—	ADC2_IN3	Input	—
BOOT_MODE0	Y16	VDD_SNVS_IN	GPIO	—	BOOT_MODE0	Input	100 kΩ pull-down
BOOT_MODE1	W16	VDD_SNVS_IN	GPIO	—	BOOT_MODE1	Input	100 kΩ pull-down
CCM_CLK1_N	P20	VDD_HIGH_CAP	—	—	CCM_CLK1_N	—	—
CCM_CLK1_P	P19	VDD_HIGH_CAP	—	—	CCM_CLK1_P	—	—
CCM_CLK2	V16	VDD_HIGH_CAP	—	—	CCM_CLK2	—	—
CCM_PMIC_STBY_REQ	N16	VDD_SNVS_IN	GPIO	—	CCM_PMIC_STBY_REQ	Output	0
DRAM_ADDR00	N5	NVCC_DRAM	DDR	—	DRAM_ADDR00	Output	100 kΩ pull-up
DRAM_ADDR01	P5	NVCC_DRAM	DDR	—	DRAM_ADDR01	Output	100 kΩ pull-up
DRAM_ADDR02	M4	NVCC_DRAM	DDR	—	DRAM_ADDR02	Output	100 kΩ pull-up
DRAM_ADDR03	K5	NVCC_DRAM	DDR	—	DRAM_ADDR03	Output	100 kΩ pull-up
DRAM_ADDR04	H5	NVCC_DRAM	DDR	—	DRAM_ADDR04	Output	100 kΩ pull-up
DRAM_ADDR05	F4	NVCC_DRAM	DDR	—	DRAM_ADDR05	Output	100 kΩ pull-up
DRAM_ADDR06	N4	NVCC_DRAM	DDR	—	DRAM_ADDR06	Output	100 kΩ pull-up
DRAM_ADDR07	G5	NVCC_DRAM	DDR	—	DRAM_ADDR07	Output	100 kΩ pull-up
DRAM_ADDR08	J4	NVCC_DRAM	DDR	—	DRAM_ADDR08	Output	100 kΩ pull-up
DRAM_ADDR09	L2	NVCC_DRAM	DDR	—	DRAM_ADDR09	Output	100 kΩ pull-up
DRAM_ADDR10	H4	NVCC_DRAM	DDR	—	DRAM_ADDR10	Output	100 kΩ pull-up
DRAM_ADDR11	M3	NVCC_DRAM	DDR	—	DRAM_ADDR11	Output	100 kΩ pull-up
DRAM_ADDR12	M5	NVCC_DRAM	DDR	—	DRAM_ADDR12	Output	100 kΩ pull-up
DRAM_ADDR13	J3	NVCC_DRAM	DDR	—	DRAM_ADDR13	Output	100 kΩ pull-up
DRAM_ADDR14	R1	NVCC_DRAM	DDR	—	DRAM_ADDR14	Output	100 kΩ pull-up

Table 120. 14 x 14 Functional Contact Assignments (continued)

Ball Name	14x14 Ball	Power Group	Ball Type	Out of Reset Condition			
				Default Mode	Default Function	Input/ Output	Value
DRAM_CAS_B	N2	NVCC_DRAM	DDR	—	DRAM_CAS_B	Output	100 kΩ pull-up
DRAM_CS0_B	L4	NVCC_DRAM	DDR	—	DRAM_CS0_B	Output	100 kΩ pull-up
DRAM_CS1_B	K2	NVCC_DRAM	DDR	—	DRAM_CS1_B	Output	100 kΩ pull-up
DRAM_DATA00	T2	NVCC_DRAM	DDR	—	DRAM_DATA00	Input	100 kΩ pull-up
DRAM_DATA01	U2	NVCC_DRAM	DDR	—	DRAM_DATA01	Input	100 kΩ pull-up
DRAM_DATA02	U1	NVCC_DRAM	DDR	—	DRAM_DATA02	Input	100 kΩ pull-up
DRAM_DATA03	R2	NVCC_DRAM	DDR	—	DRAM_DATA03	Input	100 kΩ pull-up
DRAM_DATA04	U3	NVCC_DRAM	DDR	—	DRAM_DATA04	Input	100 kΩ pull-up
DRAM_DATA05	R4	NVCC_DRAM	DDR	—	DRAM_DATA05	Input	100 kΩ pull-up
DRAM_DATA06	P3	NVCC_DRAM	DDR	—	DRAM_DATA06	Input	100 kΩpull-up
DRAM_DATA07	P4	NVCC_DRAM	DDR	—	DRAM_DATA07	Input	100 kΩ pull-up
DRAM_DATA08	F1	NVCC_DRAM	DDR	—	DRAM_DATA08	Input	100 kΩ pull-up
DRAM_DATA09	F2	NVCC_DRAM	DDR	—	DRAM_DATA09	Input	100 kΩ pull-up
DRAM_DATA10	G3	NVCC_DRAM	DDR	—	DRAM_DATA10	Input	100 kΩ pull-up
DRAM_DATA11	E2	NVCC_DRAM	DDR	—	DRAM_DATA11	Input	100 kΩ pull-up
DRAM_DATA12	E4	NVCC_DRAM	DDR	—	DRAM_DATA12	Input	100 kΩ pull-up
DRAM_DATA13	D1	NVCC_DRAM	DDR	—	DRAM_DATA13	Input	100 kΩ pull-up
DRAM_DATA14	E1	NVCC_DRAM	DDR	—	DRAM_DATA14	Input	100 kΩ pull-up
DRAM_DATA15	D2	NVCC_DRAM	DDR	—	DRAM_DATA15	Input	100 kΩ pull-up
DRAM_DATA16	Y4	NVCC_DRAM	DDR	—	DRAM_DATA16	Input	100 kΩ pull-up
DRAM_DATA17	W4	NVCC_DRAM	DDR	—	DRAM_DATA17	Input	100 kΩ pull-up
DRAM_DATA18	Y3	NVCC_DRAM	DDR	—	DRAM_DATA18	Input	100 kΩ pull-up
DRAM_DATA19	U4	NVCC_DRAM	DDR	—	DRAM_DATA19	Input	100 kΩ pull-up
DRAM_DATA20	W3	NVCC_DRAM	DDR	—	DRAM_DATA20	Input	100 kΩ pull-up
DRAM_DATA21	Y2	NVCC_DRAM	DDR	—	DRAM_DATA21	Input	100 kΩ pull-up
DRAM_DATA22	T4	NVCC_DRAM	DDR	—	DRAM_DATA22	Input	100 kΩ pull-up
DRAM_DATA23	W2	NVCC_DRAM	DDR	—	DRAM_DATA23	Input	100 kΩ pull-up
DRAM_DATA24	D3	NVCC_DRAM	DDR	—	DRAM_DATA24	Input	100 kΩ pull-up
DRAM_DATA25	B3	NVCC_DRAM	DDR	—	DRAM_DATA25	Input	100 kΩ pull-up
DRAM_DATA26	A3	NVCC_DRAM	DDR	—	DRAM_DATA26	Input	100 kΩ pull-up
DRAM_DATA27	C2	NVCC_DRAM	DDR	—	DRAM_DATA27	Input	100 kΩ pull-up

Table 120. 14 x 14 Functional Contact Assignments (continued)

Ball Name	14x14 Ball	Power Group	Ball Type	Out of Reset Condition			
				Default Mode	Default Function	Input/ Output	Value
DRAM_DATA28	A2	NVCC_DRAM	DDR	—	DRAM_DATA28	Input	100 kΩ pull-up
DRAM_DATA29	C5	NVCC_DRAM	DDR	—	DRAM_DATA29	Input	100 kΩ pull-up
DRAM_DATA30	B4	NVCC_DRAM	DDR	—	DRAM_DATA30	Input	100 kΩ pull-up
DRAM_DATA31	A4	NVCC_DRAM	DDR	—	DRAM_DATA31	Input	100 kΩ pull-up
DRAM_DQM0	N1	NVCC_DRAM	DDR	—	DRAM_DQM0	Output	100 kΩ pull-up
DRAM_DQM1	G2	NVCC_DRAM	DDR	—	DRAM_DQM1	Output	100 kΩ pull-up
DRAM_DQM2	W1	NVCC_DRAM	DDR	—	DRAM_DQM2	Output	100 kΩ pull-up
DRAM_DQM3	C1	NVCC_DRAM	DDR	—	DRAM_DQM3	Output	100 kΩ pull-up
DRAM_ODT0	T1	NVCC_DRAM	DDR	—	DRAM_ODT0	Output	100 kΩ pull-down
DRAM_RAS_B	J1	NVCC_DRAM	DDR	—	DRAM_RAS_B	Output	100 kΩ pull-up
DRAM_RESET	D4	NVCC_DRAM	DDR	—	DRAM_RESET	Output	100 kΩ pull-down
DRAM_SDBA0	G4	NVCC_DRAM	DDR	—	DRAM_SDBA0	Output	100 kΩ pull-up
DRAM_SDBA1	M2	NVCC_DRAM	DDR	—	DRAM_SDBA1	Output	100 kΩ pull-up
DRAM_SDBA2	J2	NVCC_DRAM	DDR	—	DRAM_SDBA2	Output	100 kΩ pull-up
DRAM_SDCKE0	L5	NVCC_DRAM	DDR	—	DRAM_SDCKE0	Output	100 kΩ pull-down
DRAM_SDCKE1	J5	NVCC_DRAM	DDR	—	DRAM_SDCKE1	Output	100 kΩ pull-down
DRAM_SDCLK0_N	L1	NVCC_DRAM	DDRCLK	—	DRAM_SDCLK0_N	—	—
DRAM_SDCLK0_P	K1	NVCC_DRAM	DDRCLK	—	DRAM_SDCLK0_P	Output	Low
DRAM_SDQS0_N	P2	NVCC_DRAM	DDRCLK	—	DRAM_SDQS0_N	—	—
DRAM_SDQS0_P	P1	NVCC_DRAM	DDRCLK	—	DRAM_SDQS0_P	Input	—
DRAM_SDQS1_N	H1	NVCC_DRAM	DDRCLK	—	DRAM_SDQS1_N	—	—
DRAM_SDQS1_P	G1	NVCC_DRAM	DDRCLK	—	DRAM_SDQS1_P	Input	—
DRAM_SDQS2_N	V2	NVCC_DRAM	DDRCLK	—	DRAM_SDQS2_N	—	—
DRAM_SDQS2_P	V1	NVCC_DRAM	DDRCLK	—	DRAM_SDQS2_P	Input	—
DRAM_SDQS3_N	B1	NVCC_DRAM	DDRCLK	—	DRAM_SDQS3_N	—	—

Table 120. 14 x 14 Functional Contact Assignments (continued)

Ball Name	14x14 Ball	Power Group	Ball Type	Out of Reset Condition			
				Default Mode	Default Function	Input/ Output	Value
DRAM_SDQS3_P	B2	NVCC_DRAM	DDRCLK	—	DRAM_SDQS3_P	Input	—
DRAM_SDWE_B	M1	NVCC_DRAM	DDR	—	DRAM_SDWE_B	Output	100 kΩ pull-up
ENET1_COL	B5	NVCC_ENET	GPIO	ALT5	GPIO2_IO00	Input	Keeper
ENET1_CRS	C6	NVCC_ENET	GPIO	ALT5	GPIO2_IO01	Input	Keeper
ENET1_MDC	B6	NVCC_ENET	GPIO	ALT5	GPIO2_IO02	Input	Keeper
ENET1_MDIO	A6	NVCC_ENET	GPIO	ALT5	GPIO2_IO03	Input	Keeper
ENET1_RX_CLK	A5	NVCC_ENET	GPIO	ALT5	GPIO2_IO04	Input	Keeper
ENET1_TX_CLK	F7	NVCC_ENET	GPIO	ALT5	GPIO2_IO05	Input	Keeper
ENET2_COL	E7	NVCC_ENET	GPIO	ALT5	GPIO2_IO06	Input	Keeper
ENET2_CRS	E6	NVCC_ENET	GPIO	ALT5	GPIO2_IO07	Input	Keeper
ENET2_RX_CLK	E5	NVCC_ENET	GPIO	ALT5	GPIO2_IO08	Input	Keeper
ENET2_TX_CLK	D5	NVCC_ENET	GPIO	ALT5	GPIO2_IO09	Input	Keeper
GPIO1_IO00	B20	NVCC_GPIO	GPIO	ALT5	GPIO1_IO00	Input	Keeper
GPIO1_IO01	D19	NVCC_GPIO	GPIO	ALT5	GPIO1_IO01	Input	Keeper
GPIO1_IO02	C19	NVCC_GPIO	GPIO	ALT5	GPIO1_IO02	Input	Keeper
GPIO1_IO03	D20	NVCC_GPIO	GPIO	ALT5	GPIO1_IO03	Input	Keeper
GPIO1_IO04	E16	NVCC_GPIO	GPIO	ALT5	GPIO1_IO04	Input	Keeper
GPIO1_IO05	B18	NVCC_GPIO	GPIO	ALT5	GPIO1_IO05	Input	Keeper
GPIO1_IO06	D18	NVCC_GPIO	GPIO	ALT5	GPIO1_IO06	Input	Keeper
GPIO1_IO07	A17	NVCC_GPIO	GPIO	ALT5	GPIO1_IO07	Input	Keeper
GPIO1_IO08	E17	NVCC_GPIO	GPIO	ALT5	GPIO1_IO08	Input	Keeper
GPIO1_IO09	A19	NVCC_GPIO	GPIO	ALT5	GPIO1_IO09	Input	Keeper
GPIO1_IO10	B19	NVCC_GPIO	GPIO	ALT5	GPIO1_IO10	Input	Keeper
GPIO1_IO11	C20	NVCC_GPIO	GPIO	ALT5	GPIO1_IO11	Input	Keeper
GPIO1_IO12	D17	NVCC_GPIO	GPIO	ALT5	GPIO1_IO12	Input	Keeper
GPIO1_IO13	A16	NVCC_GPIO	GPIO	ALT5	GPIO1_IO13	Input	Keeper
JTAG_MOD	R8	NVCC_JTAG	GPIO	—	JTAG_MOD	Input	100 kΩ pull-up
JTAG_TCK	R9	NVCC_JTAG	GPIO	—	JTAG_TCK	Input	47 kΩ pull-up
JTAG_TDI	R10	NVCC_JTAG	GPIO	—	JTAG_TDI	Input	47 kΩ pull-up
JTAG_TDO	Y9	NVCC_JTAG	GPIO	—	JTAG_TDO	Output	Keeper
JTAG_TMS	W9	NVCC_JTAG	GPIO	—	JTAG_TMS	Input	47 kΩ pull-up

Table 120. 14 x 14 Functional Contact Assignments (continued)

Ball Name	14x14 Ball	Power Group	Ball Type	Out of Reset Condition			
				Default Mode	Default Function	Input/ Output	Value
JTAG_TRST_B	V8	NVCC_JTAG	GPIO	—	JTAG_TRST_B	Input	47 kΩ pull-up
KEY_COL0	F18	NVCC_KEY	GPIO	ALT5	GPIO2_IO10	Input	Keeper
KEY_COL1	F19	NVCC_KEY	GPIO	ALT5	GPIO2_IO11	Input	Keeper
KEY_COL2	G17	NVCC_KEY	GPIO	ALT5	GPIO2_IO12	Input	Keeper
KEY_COL3	E20	NVCC_KEY	GPIO	ALT5	GPIO2_IO13	Input	Keeper
KEY_COL4	E19	NVCC_KEY	GPIO	ALT5	GPIO2_IO14	Input	Keeper
KEY_ROW0	F16	NVCC_KEY	GPIO	ALT5	GPIO2_IO15	Input	Keeper
KEY_ROW1	E18	NVCC_KEY	GPIO	ALT5	GPIO2_IO16	Input	Keeper
KEY_ROW2	F20	NVCC_KEY	GPIO	ALT5	GPIO2_IO17	Input	Keeper
KEY_ROW3	G20	NVCC_KEY	GPIO	ALT5	GPIO2_IO18	Input	Keeper
KEY_ROW4	H19	NVCC_KEY	GPIO	ALT5	GPIO2_IO19	Input	Keeper
LCD1_CLK	L19	NVCC_LCD1	GPIO	ALT5	GPIO3_IO00	Input	Keeper
LCD1_DATA00	M19	NVCC_LCD1	GPIO	ALT5	GPIO3_IO01	Input	Keeper
LCD1_DATA01	L17	NVCC_LCD1	GPIO	ALT5	GPIO3_IO02	Input	Keeper
LCD1_DATA02	M18	NVCC_LCD1	GPIO	ALT5	GPIO3_IO03	Input	Keeper
LCD1_DATA03	N20	NVCC_LCD1	GPIO	ALT5	GPIO3_IO04	Input	Keeper
LCD1_DATA04	N19	NVCC_LCD1	GPIO	ALT5	GPIO3_IO05	Input	Keeper
LCD1_DATA05	M15	NVCC_LCD1	GPIO	ALT5	GPIO3_IO06	Input	Keeper
LCD1_DATA06	M16	NVCC_LCD1	GPIO	ALT5	GPIO3_IO07	Input	Keeper
LCD1_DATA07	J19	NVCC_LCD1	GPIO	ALT5	GPIO3_IO08	Input	Keeper
LCD1_DATA08	K18	NVCC_LCD1	GPIO	ALT5	GPIO3_IO09	Input	Keeper
LCD1_DATA09	L15	NVCC_LCD1	GPIO	ALT5	GPIO3_IO10	Input	Keeper
LCD1_DATA10	K19	NVCC_LCD1	GPIO	ALT5	GPIO3_IO11	Input	Keeper
LCD1_DATA11	L16	NVCC_LCD1	GPIO	ALT5	GPIO3_IO12	Input	Keeper
LCD1_DATA12	K15	NVCC_LCD1	GPIO	ALT5	GPIO3_IO13	Input	Keeper
LCD1_DATA13	K16	NVCC_LCD1	GPIO	ALT5	GPIO3_IO14	Input	Keeper
LCD1_DATA14	K17	NVCC_LCD1	GPIO	ALT5	GPIO3_IO15	Input	Keeper
LCD1_DATA15	H16	NVCC_LCD1	GPIO	ALT5	GPIO3_IO16	Input	Keeper
LCD1_DATA16	H20	NVCC_LCD1	GPIO	ALT5	GPIO3_IO17	Input	Keeper
LCD1_DATA17	M20	NVCC_LCD1	GPIO	ALT5	GPIO3_IO18	Input	Keeper
LCD1_DATA18	L20	NVCC_LCD1	GPIO	ALT5	GPIO3_IO19	Input	Keeper

Table 120. 14 x 14 Functional Contact Assignments (continued)

Ball Name	14x14 Ball	Power Group	Ball Type	Out of Reset Condition			
				Default Mode	Default Function	Input/ Output	Value
LCD1_DATA19	J20	NVCC_LCD1	GPIO	ALT5	GPIO3_IO20	Input	Keeper
LCD1_DATA20	H17	NVCC_LCD1	GPIO	ALT5	GPIO3_IO21	Input	Keeper
LCD1_DATA21	G18	NVCC_LCD1	GPIO	ALT5	GPIO3_IO22	Input	Keeper
LCD1_DATA22	G19	NVCC_LCD1	GPIO	ALT5	GPIO3_IO23	Input	Keeper
LCD1_DATA23	G16	NVCC_LCD1	GPIO	ALT5	GPIO3_IO24	Input	Keeper
LCD1_ENABLE	K20	NVCC_LCD1	GPIO	ALT5	GPIO3_IO25	Input	Keeper
LCD1_HSYNC	J15	NVCC_LCD1	GPIO	ALT5	GPIO3_IO26	Input	Keeper
LCD1_RESET	J18	NVCC_LCD1	GPIO	ALT5	GPIO3_IO27	Input	Keeper
LCD1_VSYNC	J16	NVCC_LCD1	GPIO	ALT5	GPIO3_IO28	Input	Keeper
NAND_ALE	W6	NVCC_NAND	GPIO	ALT5	GPIO4_IO00	Input	Keeper
NAND_CE0_B	U7	NVCC_NAND	GPIO	ALT5	GPIO4_IO01	Input	Keeper
NAND_CE1_B	T8	NVCC_NAND	GPIO	ALT5	GPIO4_IO02	Input	Keeper
NAND_CLE	R7	NVCC_NAND	GPIO	ALT5	GPIO4_IO03	Input	Keeper
NAND_DATA00	V6	NVCC_NAND	GPIO	ALT5	GPIO4_IO04	Input	Keeper
NAND_DATA01	W8	NVCC_NAND	GPIO	ALT5	GPIO4_IO05	Input	Keeper
NAND_DATA02	Y7	NVCC_NAND	GPIO	ALT5	GPIO4_IO06	Input	Keeper
NAND_DATA03	U5	NVCC_NAND	GPIO	ALT5	GPIO4_IO07	Input	Keeper
NAND_DATA04	W7	NVCC_NAND	GPIO	ALT5	GPIO4_IO08	Input	Keeper
NAND_DATA05	T5	NVCC_NAND	GPIO	ALT5	GPIO4_IO09	Input	Keeper
NAND_DATA06	Y8	NVCC_NAND	GPIO	ALT5	GPIO4_IO10	Input	Keeper
NAND_DATA07	T6	NVCC_NAND	GPIO	ALT5	GPIO4_IO11	Input	Keeper
NAND_RE_B	U8	NVCC_NAND	GPIO	ALT5	GPIO4_IO12	Input	Keeper
NAND_READY_B	Y6	NVCC_NAND	GPIO	ALT5	GPIO4_IO13	Input	Keeper
NAND_WE_B	T7	NVCC_NAND	GPIO	ALT5	GPIO4_IO14	Input	Keeper
NAND_WP_B	V7	NVCC_NAND	GPIO	ALT5	GPIO4_IO15	Input	Keeper
ONOFF	U16	VDD_SNVS_IN	GPIO	—	ONOFF	Input	100 kΩ pull-up
POR_B	R16	VDD_SNVS_IN	GPIO	—	POR_B	Input	100 kΩ pull-up
QSPI1A_DATA0	E15	NVCC_QSPI	GPIO	ALT5	GPIO4_IO16	Input	Keeper
QSPI1A_DATA1	C15	NVCC_QSPI	GPIO	ALT5	GPIO4_IO17	Input	Keeper
QSPI1A_DATA2	D14	NVCC_QSPI	GPIO	ALT5	GPIO4_IO18	Input	Keeper
QSPI1A_DATA3	A18	NVCC_QSPI	GPIO	ALT5	GPIO4_IO19	Input	Keeper

Table 120. 14 x 14 Functional Contact Assignments (continued)

Ball Name	14x14 Ball	Power Group	Ball Type	Out of Reset Condition			
				Default Mode	Default Function	Input/ Output	Value
QSPI1A_DQS	A13	NVCC_QSPI	GPIO	ALT5	GPIO4_IO20	Input	Keeper
QSPI1A_SCLK	B16	NVCC_QSPI	GPIO	ALT5	GPIO4_IO21	Input	Keeper
QSPI1A_SS0_B	C17	NVCC_QSPI	GPIO	ALT5	GPIO4_IO22	Input	Keeper
QSPI1A_SS1_B	B17	NVCC_QSPI	GPIO	ALT5	GPIO4_IO23	Input	Keeper
QSPI1B_DATA0	A15	NVCC_QSPI	GPIO	ALT5	GPIO4_IO24	Input	Keeper
QSPI1B_DATA1	A14	NVCC_QSPI	GPIO	ALT5	GPIO4_IO25	Input	Keeper
QSPI1B_DATA2	C13	NVCC_QSPI	GPIO	ALT5	GPIO4_IO26	Input	Keeper
QSPI1B_DATA3	D13	NVCC_QSPI	GPIO	ALT5	GPIO4_IO27	Input	Keeper
QSPI1B_DQS	B13	NVCC_QSPI	GPIO	ALT5	GPIO4_IO28	Input	Keeper
QSPI1B_SCLK	B14	NVCC_QSPI	GPIO	ALT5	GPIO4_IO29	Input	Keeper
QSPI1B_SS0_B	C14	NVCC_QSPI	GPIO	ALT5	GPIO4_IO30	Input	Keeper
QSPI1B_SS1_B	B15	NVCC_QSPI	GPIO	ALT5	GPIO4_IO31	Input	Keeper
RGMII1_RD0	E8	NVCC_RGMII1	GPIO	ALT5	GPIO5_IO00	Input	Keeper
RGMII1_RD1	A7	NVCC_RGMII1	GPIO	ALT5	GPIO5_IO01	Input	Keeper
RGMII1_RD2	C7	NVCC_RGMII1	GPIO	ALT5	GPIO5_IO02	Input	Keeper
RGMII1_RD3	C8	NVCC_RGMII1	GPIO	ALT5	GPIO5_IO03	Input	Keeper
RGMII1_RX_CTL	B7	NVCC_RGMII1	GPIO	ALT5	GPIO5_IO04	Input	Keeper
RGMII1_RXC	C10	NVCC_RGMII1	GPIO	ALT5	GPIO5_IO05	Input	Keeper
RGMII1_TD0	E10	NVCC_RGMII1	GPIO	ALT5	GPIO5_IO06	Input	Keeper
RGMII1_TD1	A8	NVCC_RGMII1	GPIO	ALT5	GPIO5_IO07	Input	Keeper
RGMII1_TD2	F9	NVCC_RGMII1	GPIO	ALT5	GPIO5_IO08	Input	Keeper
RGMII1_TD3	E9	NVCC_RGMII1	GPIO	ALT5	GPIO5_IO09	Input	Keeper
RGMII1_TX_CTL	D10	NVCC_RGMII1	GPIO	ALT5	GPIO5_IO10	Input	Keeper
RGMII1_TXC	B8	NVCC_RGMII1	GPIO	ALT5	GPIO5_IO11	Input	Keeper
RGMII2_RD0	C11	NVCC_RGMII2	GPIO	ALT5	GPIO5_IO12	Input	Keeper
RGMII2_RD1	A9	NVCC_RGMII2	GPIO	ALT5	GPIO5_IO13	Input	Keeper
RGMII2_RD2	A11	NVCC_RGMII2	GPIO	ALT5	GPIO5_IO14	Input	Keeper
RGMII2_RD3	D11	NVCC_RGMII2	GPIO	ALT5	GPIO5_IO15	Input	Keeper
RGMII2_RX_CTL	B9	NVCC_RGMII2	GPIO	ALT5	GPIO5_IO16	Input	Keeper
RGMII2_RXC	A12	NVCC_RGMII2	GPIO	ALT5	GPIO5_IO17	Input	Keeper
RGMII2_TD0	A10	NVCC_RGMII2	GPIO	ALT5	GPIO5_IO18	Input	Keeper

Table 120. 14 x 14 Functional Contact Assignments (continued)

Ball Name	14x14 Ball	Power Group	Ball Type	Out of Reset Condition			
				Default Mode	Default Function	Input/ Output	Value
RGMII2_TD1	C12	NVCC_RGMII2	GPIO	ALT5	GPIO5_IO19	Input	Keeper
RGMII2_TD2	B10	NVCC_RGMII2	GPIO	ALT5	GPIO5_IO20	Input	Keeper
RGMII2_TD3	B12	NVCC_RGMII2	GPIO	ALT5	GPIO5_IO21	Input	Keeper
RGMII2_TX_CTL	C9	NVCC_RGMII2	GPIO	ALT5	GPIO5_IO22	Input	Keeper
RGMII2_TXC	B11	NVCC_RGMII2	GPIO	ALT5	GPIO5_IO23	Input	Keeper
RTC_XTALI	Y17	VDD_SNVS_CAP	—	—	RTC_XTALI	—	—
RTC_XTALO	W17	VDD_SNVS_CAP	—	—	RTC_XTALO	—	—
SD2_CLK	E12	NVCC_SD1_SD2	GPIO	ALT5	GPIO6_IO06	Input	Keeper
SD2_CMD	F12	NVCC_SD1_SD2	GPIO	ALT5	GPIO6_IO07	Input	Keeper
SD2_DATA0	E13	NVCC_SD1_SD2	GPIO	ALT5	GPIO6_IO08	Input	Keeper
SD2_DATA1	E14	NVCC_SD1_SD2	GPIO	ALT5	GPIO6_IO09	Input	Keeper
SD2_DATA2	F10	NVCC_SD1_SD2	GPIO	ALT5	GPIO6_IO10	Input	Keeper
SD2_DATA3	F11	NVCC_SD1_SD2	GPIO	ALT5	GPIO6_IO11	Input	Keeper
SD3_CLK	V11	NVCC_LOW NVCC_HIGH	GPIO	ALT5	GPIO7_IO00	Input	100 kΩ pull-down
SD3_CMD	T13	NVCC_LOW NVCC_HIGH	GPIO	ALT5	GPIO7_IO01	Input	100 kΩ pull-down
SD3_DATA0	R11	NVCC_LOW NVCC_HIGH	GPIO	ALT5	GPIO7_IO02	Input	100 kΩ pull-down
SD3_DATA1	T11	NVCC_LOW NVCC_HIGH	GPIO	ALT5	GPIO7_IO03	Input	100 kΩ pull-down
SD3_DATA2	Y14	NVCC_LOW NVCC_HIGH	GPIO	ALT5	GPIO7_IO04	Input	100 kΩ pull-down
SD3_DATA3	T14	NVCC_LOW NVCC_HIGH	GPIO	ALT5	GPIO7_IO05	Input	100 kΩ pull-down
SD3_DATA4	U14	NVCC_LOW NVCC_HIGH	GPIO	ALT5	GPIO7_IO06	Input	100 kΩ pull-down
SD3_DATA5	U13	NVCC_LOW NVCC_HIGH	GPIO	ALT5	GPIO7_IO07	Input	100 kΩ pull-down
SD3_DATA6	V12	NVCC_LOW NVCC_HIGH	GPIO	ALT5	GPIO7_IO08	Input	100 kΩ pull-down
SD3_DATA7	U11	NVCC_LOW NVCC_HIGH	GPIO	ALT5	GPIO7_IO09	Input	100 kΩ pull-down
SD4_CLK	T10	NVCC_SD4	GPIO	ALT5	GPIO6_IO12	Input	Keeper
SD4_CMD	W12	NVCC_SD4	GPIO	ALT5	GPIO6_IO13	Input	Keeper

Table 120. 14 x 14 Functional Contact Assignments (continued)

Ball Name	14x14 Ball	Power Group	Ball Type	Out of Reset Condition			
				Default Mode	Default Function	Input/ Output	Value
SD4_DATA0	Y10	NVCC_SD4	GPIO	ALT5	GPIO6_IO14	Input	Keeper
SD4_DATA1	Y11	NVCC_SD4	GPIO	ALT5	GPIO6_IO15	Input	Keeper
SD4_DATA2	Y13	NVCC_SD4	GPIO	ALT5	GPIO6_IO16	Input	Keeper
SD4_DATA3	W13	NVCC_SD4	GPIO	ALT5	GPIO6_IO17	Input	Keeper
SD4_DATA4	Y12	NVCC_SD4	GPIO	ALT5	GPIO6_IO18	Input	Keeper
SD4_DATA5	W10	NVCC_SD4	GPIO	ALT5	GPIO6_IO19	Input	Keeper
SD4_DATA6	U10	NVCC_SD4	GPIO	ALT5	GPIO6_IO20	Input	Keeper
SD4_DATA7	W11	NVCC_SD4	GPIO	ALT5	GPIO6_IO21	Input	Keeper
SD4_RESET_B	V10	NVCC_SD4	GPIO	ALT5	GPIO6_IO22	Input	Keeper
SNVS_PMIC_ON_REQ	P15	VDD_SNVS_IN	GPIO	—	SNVS_PMIC_ON _REQ	Output	100 kΩ pull-up
SNVS_TAMPER	P14	VDD_SNVS_IN	GPIO	—	SNVS_TAMPER	Input	100 kΩ pull-down
TEST_MODE	V15	VDD_SNVS_IN	—	—	TEST_MODE	Input	100 kΩ pull-down
USB_H_DATA	Y5	NVCC_USB_H	GPIO	ALT5	GPIO7_IO10	Input	100 kΩ pull-down
USB_H_STROBE	W5	NVCC_USB_H	GPIO	ALT5	GPIO7_IO11	Input	100 kΩ pull-down
USB_OTG1_CHD_B	T17	VDD_USB_CAP	—	—	USB_OTG1_CHD _B	—	—
USB_OTG1_DN	V19	VDD_USB_CAP	—	—	USB_OTG1_DN	—	—
USB_OTG1_DP	V20	VDD_USB_CAP	—	—	USB_OTG1_DP	—	—
USB_OTG2_DN	Y19	VDD_USB_CAP	—	—	USB_OTG2_DN	—	—
USB_OTG2_DP	W19	VDD_USB_CAP	—	—	USB_OTG2_DP	—	—
XTALI	T19	NVCC_PLL	—	—	XTALI	—	—
XTALO	T20	NVCC_PLL	—	—	XTALO	—	—

6.5.3 14 x 14 mm, 0.65 mm pitch, 20 x 20 Ball Map

Table 121 shows the 14 x14 mm, 0.65 mm pitch, 20 x 20 ball map for the i.MX 6SoloX.

Table 121. 14 x 14 mm Ball Map

G	F	E	D	C	B	A	
DRAM_SDQS1_P	DRAM_DATA08	DRAM_DATA14	DRAM_DATA13	DRAM_DQM3	DRAM_SDQS3_N	VSS	**1**
DRAM_DQM1	DRAM_DATA09	DRAM_DATA11	DRAM_DATA15	DRAM_DATA27	DRAM_SDQS3_P	DRAM_DATA28	**2**
DRAM_DATA10	VSS	VSS	DRAM_DATA24	VSS	DRAM_DATA25	DRAM_DATA26	**3**
DRAM_SDBA0	DRAM_ADDR05	DRAM_DATA12	DRAM_RESET	VSS	DRAM_DATA30	DRAM_DATA31	**4**
DRAM_ADDR07	VSS	ENET2_RX_CLK	ENET2_TX_CLK	DRAM_DATA29	ENET1_COL	ENET1_RX_CLK	**5**
NVCC_DRAM	NVCC_ENET	ENET2_CRS	VSS	ENET1_CRS	ENET1_MDC	ENET1_MDIO	**6**
VSS	ENET1_TX_CLK	ENET2_COL	VDD_SOC_IN	RGMII1_RD2	RGMII1_RX_CTL	RGMII1_RD1	**7**
VSS	NVCC_RGMII1	RGMII1_RD0	VDD_SOC_IN	RGMII1_RD3	RGMII1_TXC	RGMII1_TD1	**8**
VSS	RGMII1_TD2	RGMII1_TD3	VSS	RGMII2_TX_CTL	RGMII2_RX_CTL	RGMII2_RD1	**9**
VSS	SD2_DATA2	RGMII1_TD0	RGMII1_TX_CTL	RGMII1_RXC	RGMII2_TD2	RGMII2_TD0	**10**
VSS	SD2_DATA3	NVCC_RGMII2	RGMII2_RD3	RGMII2_RD0	RGMII2_TXC	RGMII2_RD2	**11**
VSS	SD2_CMD	SD2_CLK	VSS	RGMII2_TD1	RGMII2_TD3	RGMII2_RXC	**12**
VSS	NVCC_SD1_SD2	SD2_DATA0	QSPI1B_DATA3	QSPI1B_DATA2	QSPI1B_DQS	QSPI1A_DQS	**13**
VSS	NVCC_QSPI	SD2_DATA1	QSPI1A_DATA2	QSPI1B_SS0_B	QSPI1B_SCLK	QSPI1B_DATA1	**14**
NVCC_KEY	NVCC_GPIO	QSPI1A_DATA0	VSS	QSPI1A_DATA1	QSPI1B_SS1_B	QSPI1B_DATA0	**15**
LCD1_DATA23	KEY_ROW0	GPIO1_IO04	VDD_ARM_CAP	VDD_ARM_CAP	QSPI1A_SCLK	GPIO1_IO13	**16**
KEY_COL2	VSS	GPIO1_IO08	GPIO1_IO12	QSPI1A_SS0_B	QSPI1A_SS1_B	GPIO1_IO07	**17**
LCD1_DATA21	KEY_COL0	KEY_ROW1	GPIO1_IO06	VSS	GPIO1_IO05	QSPI1A_DATA3	**18**
LCD1_DATA22	KEY_COL1	KEY_COL4	GPIO1_IO01	GPIO1_IO02	GPIO1_IO10	GPIO1_IO09	**19**
KEY_ROW3	KEY_ROW2	KEY_COL3	GPIO1_IO03	GPIO1_IO11	GPIO1_IO00	VSS	**20**

Table 121. 14 x 14 mm Ball Map (continued)

N	M	L	K	J	H	
DRAM_DQM0	DRAM_SDWE_B	DRAM_SDCLK0_N	DRAM_SDCLK0_P	DRAM_RAS_B	DRAM_SDQS1_N	**1**
DRAM_CAS_B	DRAM_SDBA1	DRAM_ADDR09	DRAM_CS1_B	DRAM_SDBA2	DRAM_ZQPAD	**2**
VSS	DRAM_ADDR11	VSS	VSS	DRAM_ADDR13	VSS	**3**
DRAM_ADDR06	DRAM_ADDR02	DRAM_CS0_B	DRAM_VREF	DRAM_ADDR08	DRAM_ADDR10	**4**
DRAM_ADDR00	DRAM_ADDR12	DRAM_SDCKE0	DRAM_ADDR03	DRAM_SDCKE1	DRAM_ADDR04	**5**
NVCC_DRAM	NVCC_DRAM	NVCC_DRAM	NVCC_DRAM	NVCC_DRAM	NVCC_DRAM	**6**
VSS	VSS	VSS	NVCC_DRAM_2P5	VSS	VSS	**7**
VDD_SOC_CAP	VDD_SOC_CAP	VDD_SOC_CAP	VDD_SOC_CAP	VDD_SOC_CAP	VDD_SOC_CAP	**8**
VDD_SOC_CAP	VDD_SOC_IN	VDD_SOC_IN	VDD_SOC_IN	VDD_SOC_IN	VDD_SOC_CAP	**9**
VDD_SOC_CAP	VDD_SOC_IN	VSS	VSS	VDD_ARM_IN	VDD_ARM_CAP	**10**
VDD_SOC_CAP	VDD_SOC_IN	VSS	VSS	VDD_ARM_IN	VDD_ARM_CAP	**11**
VDD_SOC_CAP	VDD_SOC_IN	VDD_ARM_IN	VDD_ARM_IN	VDD_ARM_IN	VDD_ARM_CAP	**12**
VSS	VDD_SOC_CAP	VDD_ARM_CAP	VDD_ARM_CAP	VDD_ARM_CAP	VDD_ARM_CAP	**13**
ADC1_IN0	VSS	VSS	VSS	VSS	VSS	**14**
ADC2_IN2	LCD1_DATA05	LCD1_DATA09	LCD1_DATA12	LCD1_HSYNC	NVCC_CSI_LCD1	**15**
CCM_PMIC_STBY_REQ	LCD1_DATA06	LCD1_DATA11	LCD1_DATA13	LCD1_VSYNC	LCD1_DATA15	**16**
VDD_HIGH_CAP	VSS	LCD1_DATA01	LCD1_DATA14	VSS	LCD1_DATA20	**17**
VDD_HIGH_CAP	LCD1_DATA02	PCIE_VP_CAP	LCD1_DATA08	LCD1_RESET	VDD_ARM_IN	**18**
LCD1_DATA04	LCD1_DATA00	LCD1_CLK	LCD1_DATA10	LCD1_DATA07	KEY_ROW4	**19**
LCD1_DATA03	LCD1_DATA17	LCD1_DATA18	LCD1_ENABLE	LCD1_DATA19	LCD1_DATA16	**20**

Table 121. 14 x 14 mm Ball Map (continued)

Y	W	V	U	T	R	P	
VSS	DRAM_DQM2	DRAM_SDQS2_P	DRAM_DATA02	DRAM_ODT0	DRAM_ADDR14	DRAM_SDQS0_P	**1**
DRAM_DATA21	DRAM_DATA23	DRAM_SDQS2_N	DRAM_DATA01	DRAM_DATA00	DRAM_DATA03	DRAM_SDQS0_N	**2**
DRAM_DATA18	DRAM_DATA20	VSS	DRAM_DATA04	VSS	VSS	DRAM_DATA06	**3**
DRAM_DATA16	DRAM_DATA17	VSS	DRAM_DATA19	DRAM_DATA22	DRAM_DATA05	DRAM_DATA07	**4**
USB_H_DATA	USB_H_STROBE	NVCC_USB_H	NAND_DATA03	NAND_DATA05	VSS	DRAM_ADDR01	**5**
NAND_READY_B	NAND_ALE	NAND_DATA00	VSS	NAND_DATA07	NVCC_NAND	NVCC_DRAM	**6**
NAND_DATA02	NAND_DATA04	NAND_WP_B	NAND_CE0_B	NAND_WE_B	NAND_CLE	VSS	**7**
NAND_DATA06	NAND_DATA01	JTAG_TRST_B	NAND_RE_B	NAND_CE1_B	JTAG_MOD	VSS	**8**
JTAG_TDO	JTAG_TMS	VDD_SOC_CAP	VSS	NVCC_JTAG	JTAG_TCK	VSS	**9**
SD4_DATA0	SD4_DATA5	SD4_RESET_B	SD4_DATA6	SD4_CLK	JTAG_TDI	VSS	**10**
SD4_DATA1	SD4_DATA7	SD3_CLK	SD3_DATA7	SD3_DATA1	SD3_DATA0	VSS	**11**
SD4_DATA4	SD4_CMD	SD3_DATA6	VSS	NVCC_SD4	NVCC_HIGH	VSS	**12**
SD4_DATA2	SD4_DATA3	NVCC_LOW	SD3_DATA5	SD3_CMD	VDDA_ADC_3P3	ADC1_IN3	**13**
SD3_DATA2	ADC1_IN2	ADC_VREFL	SD3_DATA4	SD3_DATA3	ADC2_IN1	SNVS_TAMPER	**14**
ADC_VREFH	ADC2_IN0	TEST_MODE	VSS	ADC1_IN1	ADC2_IN3	SNVS_PMIC_ON_REQ	**15**
BOOT_MODE0	BOOT_MODE1	CCM_CLK2	ONOFF	NGND_KEL0	POR_B	GPANAIO	**16**
RTC_XTALI	RTC_XTALO	VDD_USB_CAP	USB_OTG2_VBUS	USB_OTG1_CHD_B	VSS	VDD_HIGH_IN	**17**
VSS	VSS	VSS	NVCC_PLL	VDD_SNVS_CAP	VDD_SNVS_IN	VDD_HIGH_IN	**18**
USB_OTG2_DN	USB_OTG2_DP	USB_OTG1_DN	VSS	XTALI	VSS	CCM_CLK1_P	**19**
VSS	USB_OTG1_VBUS	USB_OTG1_DP	VSS	XTALO	VSS	CCM_CLK1_N	**20**

7 Revision History

Table 122 provides a revision history for this data sheet.

Table 122. i.MX 6SoloX Data Sheet Document Revision History

Rev. Number	Date	Substantive Change(s)
4	10/2018	Changes for this revision include: • Table 1, “Part Number Nomenclature—i.MX 6SoloX,” on page 5, – Part Differentiator section: Removed VADC column.” • Section 4.12.6.1.1, “MII Receive Signal Timing (ENET_RX_DATA3,2,1,0, ENET_RX_EN, ENET_RX_ER, and ENET_RX_CLK)” on page 84, and Section 4.12.6.1.2, “MII Transmit Signal Timing (ENET_TX_DATA3,2,1,0, ENET_TX_EN, ENET_TX_ER, and ENET_TX_CLK)” on page 84 – Removed sentence: Additionally, the processor clock frequency must exceed twice the ENET_RX_CLK frequency.” • Table 6, “Absolute Maximum Ratings,” on page 22, – Row VDD_SNVS_IN: Corrected maximum value from 3.4V to 3.6V. • Table 24, “XTALI and RTC_XTALI DC Parameters,” on page 40, – Row: XTALI input leakage current at startup, $I_{XTALI_STARTUP}$: Changed from “... driven 32KHz RTC clock @ 1.1V” to “...driven 24 MHz clock at 1.1V.” • Table 56, “eMMC4.4/4.41 Interface Timing Specification,” on page 81, – Row: SD2, uSDHC Output Delay: Changed t_{OD} from 2.5ns minimum to 2.8ns and 7.1ns maximum to 6.8ns. • Table 67, “LCDIF Display Interface Signal Mapping,” on page 91, – Rows LCD_D23 and LCD_D22: Corrected Column 24-bit DOTCLK LCD IF from G[7] to R[7] and G[6] to R[6].

Table 122. i.MX 6SoloX Data Sheet Document Revision History (continued)

Rev. Number	Date	Substantive Change(s)
3	09/2017	• Minor formatting updates and editorial corrections throughout. • Removed references of 'NTSC/PAL analog video input interface' from features and throughout. • Removed support of Video ADC (VADC) and TVDECODE throughout. • Replaced ipp_dse with DSE throughout. • Section 1, "Introduction: Replaced LVDDR3 with DDR3L in text description. • Table 1: Added orderable part numbers in the Ordering Information table. • Figure 1: – Changed the Part Differentiator table's ADC column to include channel count. – Included Rev 1.4 in Silicon Revision section • Figure 2: Removed VADC and TV Decoder blocks from the block diagram. • Section 1.2, "Features": – Modified "Displays" information *from* "Total two interfaces available" *to* "Total three interfaces available". Also added "Two parallel 24-bit display ports, each up to 1080P at 60 Hz" to the list. Removed "One Parallel 24-bit display port, up to dual WXGA at 60 Hz". – Clarified the Miscellaneous interfaces *from* "Two 4-channel …(ADC)" *to* "Up to two 4-channel …(ADC)". • Table 6: – IO Supply for DDR Interface row, added the footnote "The absolute maximum voltage includes an allowance for 400 mV of overshoot on the IO pins. Per JEDEC standards, the allowed signal overshoot must be de-rated if NVCC_DRAM exceeds 1.575V." – IO Supply for RGMII Interface row, maximum value *from* 2.725 V *to* 3.7 V. – Input/Output Voltage Range row, split the row into DDR and non-DDR and added the corresponding details. – 1.2V supply for video A/D converter row, removed – 3.3V supply for video A/D converter row, parameter name changed to 3.3V supply for analog circuitry. • Table 10: – GPIO supplies row, added NVCC_NAND to the Symbol column. – Video A/D converter supply row, removed • Table 13:Following rows removed: VDD_AFE_1P2, VDDA_AFE_3P3 • Table 57: SDR50/SDR104 Interface Timing Specification table, changed duplicate SD2 to SD3. Minor format changes to minimum and maximum columns for SD2 and SD3 rows. • Updated introductory text of the following sections: Section 4.6.4.1, "LPDDR2 Mode I/O DC Parameters, Section 4.6.4.2, "DDR3/DDR3L Mode I/O DC Parameters, Section 4.7.2, "DDR I/O AC Parameters, Section 4.8.3, "DDR I/O Output Buffer Impedance. • Corrected Figure 19, "Asynchronous A/D Muxed Write Access," on page 59 • Table 56: Minimum value of 'uSDHC Input Setup Time' corrected to 1.7ns. • Added Section 4.12.5.4, "HS200 Mode Timing. • Added Section 4.12.9.1, "LCDIF Display Interface Signal Mapping. • Removed phrase "Case x" from figure titles of all package diagrams. Also updated the diagrams with NXP branding. • Table 109: – Made the following ball positions Reserved: K21, L21, N18. • Table 110: – Made the following balls Reserved: L23, L22, K23, and K22. • Table 111: – Made the following balls Reserved: K21, K22, K23, L21, L22, L23, N18.

Table 122. i.MX 6SoloX Data Sheet Document Revision History (continued)

Rev. Number	Date	Substantive Change(s)
2	06/2016	• Changed throughout: - VDD_AFE_3P3 to VDDA_AFE_3P3 - VDDAD to VDDA_ADC_3P3 • Table 1, changed all instances of “2N19K” to “2N19K or 3N19K”. • Figure 1, added new row under Silicon Rev, “Rev 1.3 Production...” • Table 2, i.MX 6SoloX Modules List: - BCH, deleted “encryption/decryption” in Brief Description column - eCSPI1-eCSPI5: deleted “with data rate...” in Brief Description column - uSDHC1-uSDHC4: added “Conforms to the SD...” - uSDHC1-uSDHC4: deleted 7th and 8th paragraphs - uSDHC1-uSDHC4: added “Each port is placed...” • Table 3, Special Signal Considerations - Signal Name, GPANAIO: updated text to “Analog output for NXP...” - Signal Name, POR_B: deleted second sentence • Section 3.2, “Recommended Connections for Unused Analog Interfaces”, removed text and original table, Recommended Connections for Unused Analog Interfaces, and referred reader to the Hardware Development Guide. • Section 4.1.1, “Absolute Maximum Ratings - added new CAUTION - updated Table 6, Absolute Maximum Ratings • Section 4.1.2, “Thermal Resistance, added NOTE • Table 7, 19x19 mm (VM)..., corrected Junction to Package Top value 0.2 to 2 • Table 8, 17x17 mm NP (VO)..., corrected Junction to Package Top value 0.2 to 2 • Table 9, 14x14 mm (VK)..., updated Junction to Package Top value 0.2 to 2 • Table 10, Operating ranges, USB supply voltages: changed 5.25 to 5.5 • Table 13, Maximum Supply Currents - added text: Use Maximum IO equation - added footnotes • Section 4.2.1, “Power-Up Sequence, - Removed references to the internal POR function. Internal POR is not supported on the i.MX 6SoloX.” - Deleted bullets 4 and 5 • Section 4.3.2.3, “LDO_USB, changed 5.25 to 5.5 • Section 4.6.1, “XTALI and RTC_XTALI (Clock Inputs) DC Parameters, added new NOTE. • Table 24, XTALI and RTC_XTALI DC Parameters, added new footnote, “This voltage specification...” • Section 4.10, “Multi-mode DDR Controller (MMDC) this new section added, replacing the original section 4.9.4 DDR SRAM Specific Parameters (DDR3/DDR3L and LPDDR2). • Table 57, SDR50/SDR104 Interface..., changed SD2 Min and max values to 0.46 and 0.54. Changed SD5 Max to 0.74. • Table 64, RGMII Signal Switching Specifications, deleted footnote 1. • Table 76, Master Mode SAI Timing: - changed S1 Min value to 20 - changed S3 Min value to 2 x S1 *(continued on next page)*

Table 122. i.MX 6SoloX Data Sheet Document Revision History (continued)

Rev. Number	Date	Substantive Change(s)
2	06/2016	*(continued from previous next page)* • Table 77, Slave Mode SAI Timing: - changed title from Master Mode Timing to Slave Mode SAI Timing - changed S11 Min value to 20 - added new row, S19 - added new footnote • Figure 62, SAI Timing — Slave Modes: added S19 • Table 91, 12-bit ADC Operating Conditions: changed Supply Voltage Min value to 3.0 • Table 105, SD/MMC boot through USDHC4, changed Signal Names from usdhc3.DATA4 - usdhc3.DATA7, to usdhc4.DATA4 - usdhc4.DATA7 • Table 109, 19x19 mm Supplies Contact Assignments: changed GPANAIO Remark from “Test signal...” to “Analog output for NXP use...” • Table 110, 19x19 mm Functional Contact Assignments: DRAM_SDCLK_0, updated “Input” to “Output” and Value to “0” • Table 113, 17x17 mm NP (no PCIe) supplies contact assignments: - GPANAIO: changed remark from “Test signal...” to “Analog output for NXP use...” - VDD_SOC_CAP: deleted L9 - VDD_SOC_IN: added L9 - DRAM_SDCLK0_P: updated “Input” to “Output” and Value to “Low” • Table 116, 17x17 mm WP (with PCIe) supplies contact assignments: - GPANAIO: changed remark from “Test signal...” to “Analog output for NXP use...” - VDD_SOC_IN: added L9 • Table 117 17x17 mm WP (with PCIe) Functional Contact Assignments, DRAM_SDCLK0_P: updated “Input” to “Output” and Value to “Low” • Table 119 14x14 mm supplies contact assignments: - added rows ADC_VREFL and PCIE_CP_CAP - VDD_HIGH_CAP: added N18 - VDD_HIGH_IN: added P18 - VDD_SOC_IN: added L9 • Table 120, 14x14 mm Functional Contact Assignments, DRAM_SDCLK0_P: updated “Input” to “Output” and Value to “Low” - RGMII1_TX_CTL: updated to D10

Table 122. i.MX 6SoloX Data Sheet Document Revision History (continued)

Rev. Number	Date	Substantive Change(s)
1	7/2015	• Throughout: – Updated Arm Cortex-M4 core operation speed as 227 MHz – Corrected signal name from NVCC_LVDS_2P5 to NVCC_LVDS – For supply rail NVCC_LOW, corrected supply input voltage from 3.3 V to 1.8 V • On page 2, in the list of i.MX 6SoloX features, updated the first bullet, adding that FreeRTOS can be run on the Cortex-M4. • Table 1, "Ordering Information," on page 3: – Updated Cortex-M4 core operation speed as 227 MHz – Added footnote on "Cortex-A9 Speed" column • In Section 1.2, "Features": – Corrected second bullet under "External memory interfaces" to say, "16-bit NAND-Flash, including support for Raw MLC/SLC, 2 KB, 4 KB, and 8 KB page size, BA-NAND, PBA-NAND, LBA-NAND, OneNAND and others. BCH ECC up to 62 bits. 16-bit boot is supported from OneNAND. 8-bit boot is supported from other NAND types." – Corrected second bullet under "USB" to say, "One HS-IC USB (High Speed Inter-Chip USB) host" – Corrected first bullet under "Miscellaneous IPs and interfaces" to say, "Three SSIs and two SAIs supporting up to five I2S or AC97 ports" – Updated ninth bullet under "Miscellaneous IPs and interfaces" to say, "Two Gigabit Ethernet Controllers (designed to be compatible with IEEE AVB standards and IEEE Std 1588®), 10/100/1000 Mbps" • Updated Section 2.1, "Block Diagram": – In "Shared Peripherals" block, corrected from UART(5) to UART(1) and added ASRC and ESAI. In "AP Peripherals" block, added UART(5) and eCSPI(1). – Updated note regarding number of module instances • Updated Table 2, "i.MX 6SoloX Modules List," on page 11 • In Table 3, "Special Signal Considerations," on page 19: – In XTALI/XTALO row, added references to engineering bulletin and reference manual – In row for NVCC_LVDS_2P5, corrected signal name to NVCC_LVDS and updated remarks • Updated Table 5, "Recommended Connections for Unused Analog Interfaces," on page 21: – Deleted row for RTC – Added row for NVCC_USB_H – Updated footnote pertaining to PCIe • Updated Table 6, "Absolute Maximum Ratings," on page 22: – Added footnote pertaining to "Symbol" column – Updated maximum value for VDD_SNVS_IN supply voltage • Updated Table 10, "Operating Ranges," on page 27. Table reformatted since previous release; not a specification change. • In Section 4.1.4, "External Clock Sources," added caution about use of the internal RTC oscillator vs. an external crystal. • Updated Table 14, "Low Power Mode Current and Power Consumption (LDO Bypass Mode)," on page 32 • In Section 4.5.2, "OSC32K," – Added caution about use of the internal RTC oscillator vs. an external crystal – Updated description of result when the clock monitor determines that the OSC32K is not present – Removed text pertaining to ~3 V coin-cell battery • Updated Table 24, "XTALI and RTC_XTALI DC Parameters," on page 40 *(continued on next page)*

Table 122. i.MX 6SoloX Data Sheet Document Revision History (continued)

Rev. Number	Date	Substantive Change(s)
1	7/2015	*(continued from previous page)* • Updated Table 45, “EIM Asynchronous Timing Parameters Relative to Chip Select›,” on page 60. Elaborated to show results of calculations. No specification change. • In Table 64, “DDR3/DDR3L Read Cycle,” on page 93, updated minimum value for DDR26 • Added note regarding ECSPIx_MOSI to Figure 36, "ECSPI Master Mode Timing Diagram," on page 74 • Added note regarding ECSPIx_MISO to Figure 37, "ECSPI Slave Mode Timing Diagram," on page 75 • Updated Figure 42, "SDR50/SDR104 Timing," on page 82 • In Table 68, “LVDS Display Bridge (LDB) Electrical Specification,” on page 93: – Corrected units for V_{OH} values from ‘mV’ to ‘V’ – Corrected units for V_{OL} values from ‘mV’ to ‘V’ • In Section 4.12.20, “USB PHY Parameters,” in list of amendments to Rev. 2 of the The USB PHY meets the electrical compliance requirements defined in revision 2.0 of the *USB On-The-Go and Embedded Host Supplement to the USB 2.0 Specification,* added “Portable device only” under “Battery Charging Specification” • Added Table 108, “Signals with Different States During Reset and After Reset,” on page 130 • In Table 110, “19x19 mm Functional Contact Assignments,” on page 136, corrected GPIO signal names • In Table 113, “17x17 mm NP (no PCIe) Supplies Contact Assignments,” on page 155, added ball L9 to the VDD_SOC_CAP row • In Table 120, “14 x 14 Functional Contact Assignments,” on page 189, corrected power group for SD2 ball names to ‘NVCC_SD1_SD2’
0	2/2015	• Initial public release

How to Reach Us:

Home Page:
nxp.com

Web Support:
nxp.com/support

Information in this document is provided solely to enable system and software implementers to use NXP products. There are no express or implied copyright licenses granted hereunder to design or fabricate any integrated circuits based on the information in this document. NXP reserves the right to make changes without further notice to any products herein.

NXP makes no warranty, representation, or guarantee regarding the suitability of its products for any particular purpose, nor does NXP assume any liability arising out of the application or use of any product or circuit, and specifically disclaims any and all liability, including without limitation consequential or incidental damages. “Typical” parameters that may be provided in NXP data sheets and/or specifications can and do vary in different applications, and actual performance may vary over time. All operating parameters, including “typicals,” must be validated for each customer application by customer’s technical experts. NXP does not convey any license under its patent rights nor the rights of others. NXP sells products pursuant to standard terms and conditions of sale, which can be found at the following address: nxp.com/SalesTermsandConditions.

While NXP has implemented advanced security features, all products may be subject to unidentified vulnerabilities. Customers are responsible for the design and operation of their applications and products to reduce the effect of these vulnerabilities on customer’s applications and products, and NXP accepts no liability for any vulnerability that is discovered. Customers should implement appropriate design and operating safeguards to minimize the risks associated with their applications and products.

NXP, the NXP logo, NXP SECURE CONNECTIONS FOR A SMARTER WORLD, COOLFLUX, EMBRACE, GREENCHIP, HITAG, I2C BUS, ICODE, JCOP, LIFE VIBES, MIFARE, MIFARE CLASSIC, MIFARE DESFire, MIFARE PLUS, MIFARE FLEX, MANTIS, MIFARE ULTRALIGHT, MIFARE4MOBILE, MIGLO, NTAG, ROADLINK, SMARTLX, SMARTMX, STARPLUG, TOPFET, TRENCHMOS, UCODE, Freescale, the Freescale logo, AltiVec, C?5, CodeTEST, CodeWarrior, ColdFire, ColdFire+, C?Ware, the Energy Efficient Solutions logo, Kinetis, Layerscape, MagniV, mobileGT, PEG, PowerQUICC, Processor Expert, QorIQ, QorIQ Qonverge, Ready Play, SafeAssure, the SafeAssure logo, StarCore, Symphony, VortiQa, Vybrid, Airfast, BeeKit, BeeStack, CoreNet, Flexis, MXC, Platform in a Package, QUICC Engine, SMARTMOS, Tower, TurboLink, and UMEMS are trademarks of NXP B.V. All other product or service names are the property of their respective owners. Arm, AMBA, Artisan, Cortex, Jazelle, Keil, SecurCore, Thumb, TrustZone, and µVision are registered trademarks of Arm Limited (or its subsidiaries) in the EU and/or elsewhere. Arm7, Arm9, Arm11, big.LITTLE, CoreLink, CoreSight, DesignStart, Mali, Mbed, NEON, POP, Sensinode, Socrates, ULINK and Versatile are trademarks of Arm Limited (or its subsidiaries) in the EU and/or elsewhere. All rights reserved. Oracle and Java are registered trademarks of Oracle and/or its affiliates. The Power Architecture and Power.org word marks and the Power and Power.org logos and related marks are trademarks and service marks licensed by Power.org.

© 2015-2018 NXP B.V.

Document Number: IMX6SXCEC
Rev. 4
11/2018