MOSFET

Metal Oxide Semiconductor Field Effect Transistor

CoolMOS™ E6 600V

600V CoolMOS™ E6 Power Transistor
IPx60R600E6

Data Sheet

Rev. 2.4
Final

Power Management & Multimarket

Downloaded from Arrow.com.

1 Description

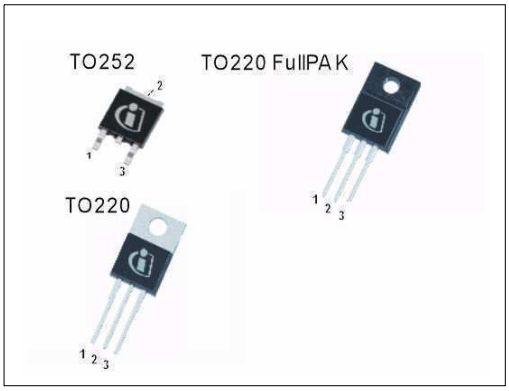

CoolMOS™ is a revolutionary technology for high voltage power MOSFETs, designed according to the superjunction (SJ) principle and pioneered by Infineon Technologies. CoolMOS™ E6 series combines the experience of the leading SJ MOSFET supplier with high class innovation. The offered devices provide all benefits of a fast switching SJ MOSFET while not sacrificing ease of use. Extremely low switching and conduction losses make switching applications even more efficient, more compact, lighter, and cooler.

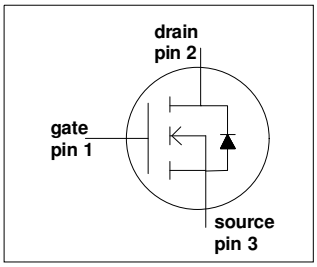

Features

- Extremely low losses due to very low FOM R_{dson}*Q_g and E_{oss}
- Very high commutation ruggedness
- Easy to use/drive, Pb-free plating, halogen free
- Fully qualified according to JEDEC for Industrial Applications

Applications

PFC stages, hard switching PWM stages and resonant switching PWM stages for e.g. PC Silverbox, Adapter, LCD & PDP TV, Lighting, Server, Telecom and UPS.

Please note: For MOSFET paralleling the use of ferrite beads on the gate or separate totem poles is generally recommended.

Table 1 Key Performance Parameters

Parameter	Value	Unit
V_{DS} @ $T_{j,max}$	650	V
$R_{DS(on),max}$	0.6	Ω
$Q_{g,typ}$	20.5	nC
$I_{D,pulse}$	19	A
E_{oss} @ 400V	1.9	µJ
Body diode di/dt	500	A/µs

Type / Ordering Code	Package	Marking	Related Links
IPD60R600E6	PG-TO252	6R600E6	IFX CoolMOS Webpage
IPP60R600E6	PG-TO220		IFX Design tools
IPA60R600E6	PG-TO220 FullPAK		

Downloaded from Arrow.com.

Table of Contents

1 Description 2
Table of Contents 3
2 Maximum ratings 4
3 Thermal characteristics 5
4 Electrical characteristics 6
5 Electrical characteristics diagrams 8
6 Test circuits 13
7 Package outlines 14
8 Revision History 18

Downloaded from Arrow.com.

2 Maximum ratings

at T_j = 25 °C, unless otherwise specified.

Table 2 Maximum ratings

Parameter	Symbol	Values			Unit	Note / Test Condition
		Min.	Typ.	Max.		
Continuous drain current[1]	I_D	-	-	7.3	A	T_C= 25 °C
				4.6		T_C= 100°C
Pulsed drain current[2]	$I_{D,pulse}$	-	-	19	A	T_C=25 °C
Avalanche energy, single pulse	E_{AS}	-	-	133	mJ	I_D=1.3 A, V_{DD}=50 V (see table 21)
Avalanche energy, repetitive	E_{AR}	-	-	0.2		I_D=1.3 A, V_{DD}=50 V
Avalanche current, repetitive	I_{AR}	-	-	1.3	A	
MOSFET dv/dt ruggedness	dv/dt	-	-	50	V/ns	V_{DS}=0...480 V
Gate source voltage	V_{GS}	-20	-	20	V	static
		-30		30		AC (f>1 Hz)
Power dissipation for TO-220, TO-252	P_{tot}	-	-	63	W	T_C=25 °C
Power dissipation for TO-220 FullPAK	P_{tot}	-	-	28	W	T_C=25 °C
Operating and storage temperature	T_j, T_{stg}	-55	-	150	°C	
Mounting torque TO-220		-	-	60	Ncm	M3 and M3.5 screws
Mounting torque TO-220 FullPAK				50		M2.5 screws
Continuous diode forward current	I_S	-	-	6.3	A	T_C=25 °C
Diode pulse current[2]	$I_{S,pulse}$	-	-	19	A	T_C=25 °C
Reverse diode dv/dt[3]	dv/dt	-	-	15	V/ns	V_{DS}=0...400 V, $I_{SD} \leq I_D$, T_j=25 °C
Maximum diode commutation speed[3]	di_f/dt			500	A/µs	(see table 22)

1) Limited by $T_{j,max.}$ Maximum duty cycle D=0.75
2) Pulse width t_p limited by $T_{j,max}$
3) Identical low side and high side switch with identical R_G

Downloaded from Arrow.com.

3 Thermal characteristics

Table 3 Thermal characteristics TO-220 (IPP60R600E6)

Parameter	Symbol	Values			Unit	Note / Test Condition
		Min.	Typ.	Max.		
Thermal resistance, junction - case	R_{thJC}	-	-	2.0	°C/W	
Thermal resistance, junction - ambient	R_{thJA}	-	-	62		leaded
Soldering temperature, wavesoldering only allowed at leads	T_{sold}	-	-	260	°C	1.6 mm (0.063 in.) from case for 10 s

Table 4 Thermal characteristics TO-220FullPAK (IPA60R600E6)

Parameter	Symbol	Values			Unit	Note / Test Condition
		Min.	Typ.	Max.		
Thermal resistance, junction - case	R_{thJC}	-	-	4.5	°C/W	
Thermal resistance, junction - ambient	R_{thJA}	-	-	80		leaded
Soldering temperature, wavesoldering only allowed at leads	T_{sold}	-	-	260	°C	1.6 mm (0.063 in.) from case for 10 s

Table 5 Thermal characteristics TO-252 (IPD60R600E6)

Parameter	Symbol	Values			Unit	Note / Test Condition
		Min.	Typ.	Max.		
Thermal resistance, junction - case	R_{thJC}	-	-	2.0	°C/W	
Thermal resistance, junction - ambient	R_{thJA}	-	-	62		SMD version, device on PCB, minimal footprint
			35			SMD version, device on PCB, 6cm^2 cooling area[1)]
Soldering temperature, wave- & reflow soldering allowed	T_{sold}	-	-	260	°C	reflow MSL1

1) Device on 40mm*40mm*1.5mm one layer epoxy PCB FR4 with 6cm^2 copper area (thickness 70µm) for drain connection. PCB is vertical without air stream cooling.

Downloaded from Arrow.com.

4 Electrical characteristics

Electrical characteristics, at T_j=25 °C, unless otherwise specified.

Table 6 Static characteristics

Parameter	Symbol	Values			Unit	Note / Test Condition
		Min.	Typ.	Max.		
Drain-source breakdown voltage	$V_{(BR)DSS}$	600	-	-	V	V_{GS}=0 V, I_D=0.25 mA
Gate threshold voltage	$V_{GS(th)}$	2.5	3	3.5		V_{DS}=V_{GS}, I_D=0.20mA
Zero gate voltage drain current	I_{DSS}	-	-	1	µA	V_{DS}=600 V, V_{GS}=0 V, T_j=25 °C
		-	10	-		V_{DS}=600 V, V_{GS}=0 V, T_j=150 °C
Gate-source leakage current	I_{GSS}	-	-	100	nA	V_{GS}=20 V, V_{DS}=0 V
Drain-source on-state resistance	$R_{DS(on)}$	-	0.54	0.60	Ω	V_{GS}=10 V, I_D=2.4 A, T_j=25 °C
		-	1.40	-		V_{GS}=10 V, I_D=2.4A, T_j=150 °C
Gate resistance	R_G	-	10	-	Ω	f=1 MHz, open drain

Table 7 Dynamic characteristics

Parameter	Symbol	Values			Unit	Note / Test Condition
		Min.	Typ.	Max.		
Input capacitance	C_{iss}	-	440	-	pF	V_{GS}=0 V, V_{DS}=100 V, f=1 MHz
Output capacitance	C_{oss}	-	30	-		
Effective output capacitance, energy related[1)]	$C_{o(er)}$	-	21	-		V_{GS}=0 V, V_{DS}=0...480 V
Effective output capacitance, time related[2)]	$C_{o(tr)}$	-	88	-		I_D=constant, V_{GS}=0 V V_{DS}=0...480V
Turn-on delay time	$t_{d(on)}$	-	10	-	ns	V_{DD}=400 V, V_{GS}=13 V, I_D=3 A, R_G= 6.8 Ω (see table 20)
Rise time	t_r	-	8	-		
Turn-off delay time	$t_{d(off)}$	-	58	-		
Fall time	t_f	-	11	-		

1) $C_{o(er)}$ is a fixed capacitance that gives the same stored energy as C_{oss} while V_{DS} is rising from 0 to 80% $V_{(BR)DSS}$

2) $C_{o(tr)}$ is a fixed capacitance that gives the same charging time as C_{oss} while V_{DS} is rising from 0 to 80% $V_{(BR)DSS}$

Downloaded from Arrow.com.

Table 8 Gate charge characteristics

Parameter	Symbol	Values			Unit	Note / Test Condition
		Min.	Typ.	Max.		
Gate to source charge	Q_{gs}	-	2.5	-	nC	V_{DD}=480 V, I_D=3.0A, V_{GS}=0 to 10 V
Gate to drain charge	Q_{gd}	-	10.5	-		
Gate charge total	Q_g	-	20.5	-		
Gate plateau voltage	$V_{plateau}$	-	5.4	-	V	

Table 9 Reverse diode characteristics

Parameter	Symbol	Values			Unit	Note / Test Condition
		Min.	Typ.	Max.		
Diode forward voltage	V_{SD}	-	0.9	-	V	V_{GS}=0 V, I_F=3.0A, T_j=25 °C
Reverse recovery time	t_{rr}	-	250	-	ns	V_R=400 V, I_F=3.0A, di_F/dt=100 A/µs (see table 22)
Reverse recovery charge	Q_{rr}	-	2.1	-	µC	
Peak reverse recovery current	I_{rrm}	-	16	-	A	

Downloaded from Arrow.com.

5 Electrical characteristics diagrams

Table 10

Power dissipation TO-220, TO-252	Power dissipation TO-220 FullPAK
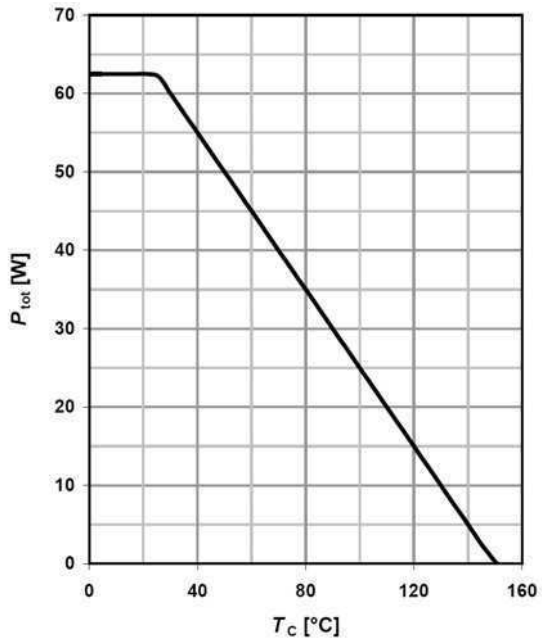	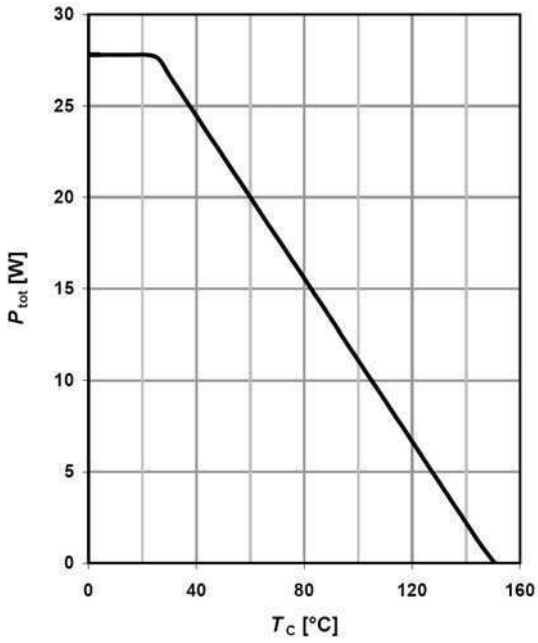
$P_{tot} = f(T_C)$	$P_{tot} = f(T_C)$

Table 11

Max. transient thermal impedance TO-220, TO-252	Max. transient thermal impedance TO-220 FullPAK
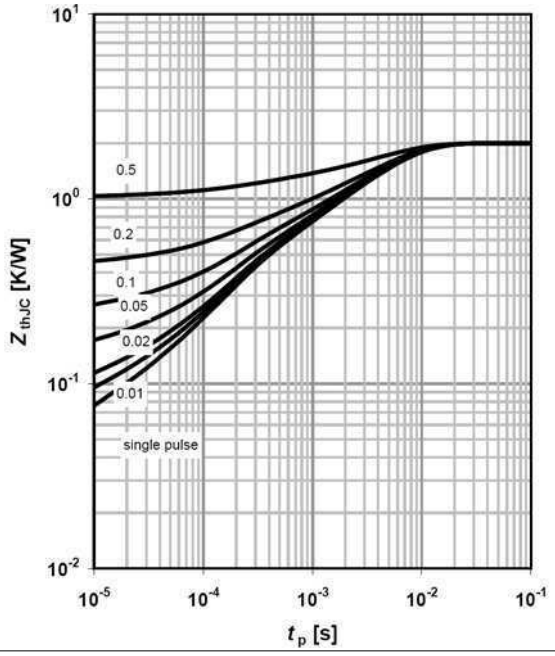	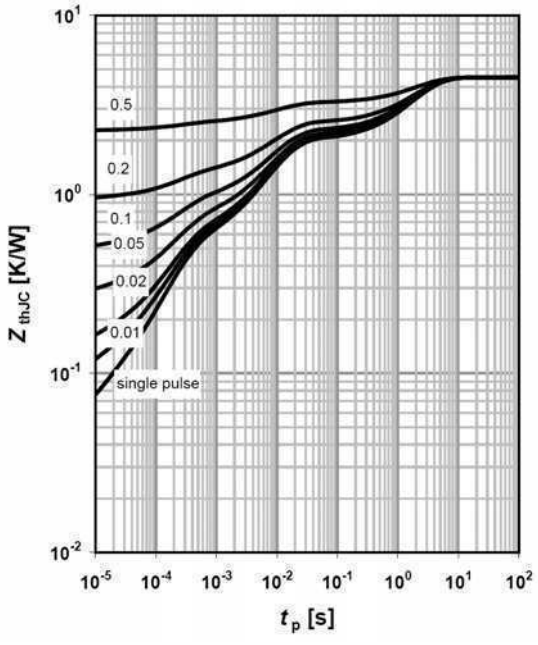
$Z_{(thJC)}$=f(tp); parameter: D=t_p/T	$Z_{(thJC)}$=f(tp); parameter: D=t_p/T

Downloaded from Arrow.com.

Table 12

Safe operating area T_C=25 °C TO-220, TO-252	Safe operating area T_C=25 °C TO-220 FullPAK
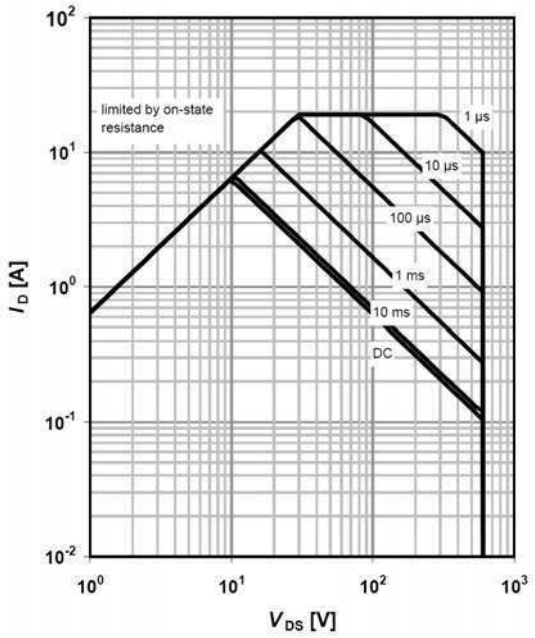	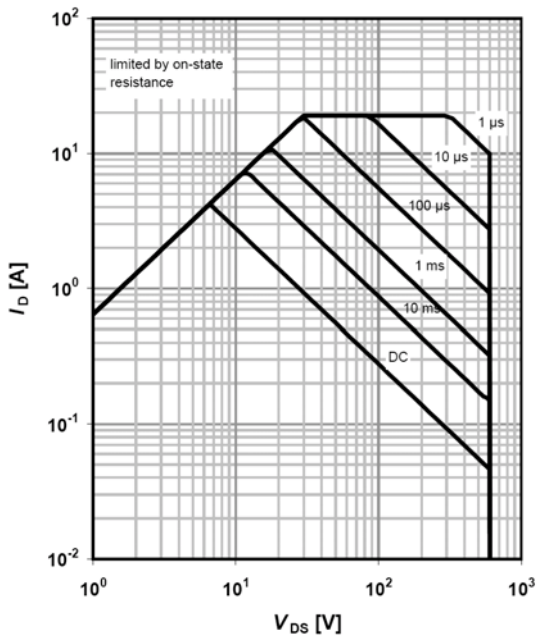
I_D=f(V_{DS}); T_C=25 °C; D=0; parameter t_p	I_D=f(V_{DS}); T_C=25 °C; D=0; parameter t_p

Table 13

Safe operating area T_C=80 °C TO-220, TO-252	Safe operating area T_C=80 °C TO-220 FullPAK
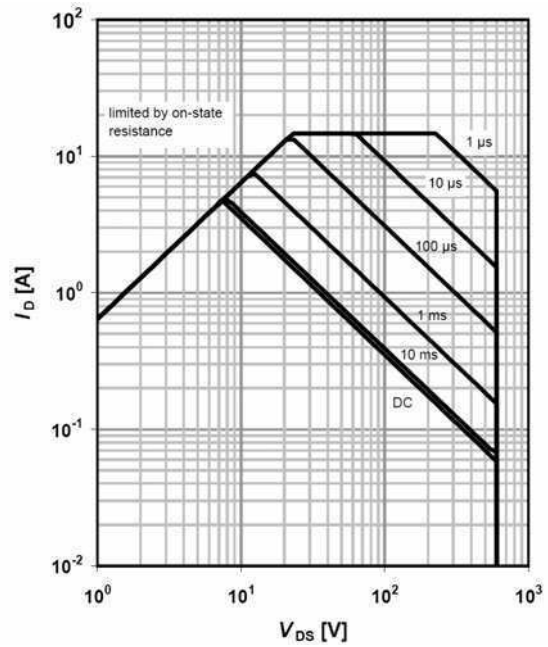	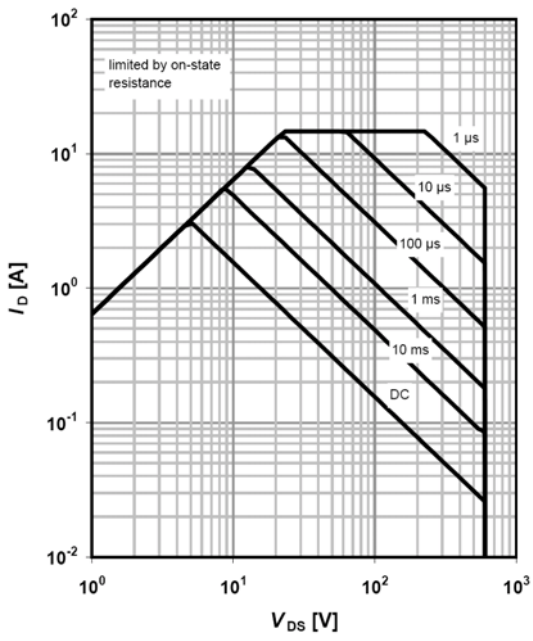
I_D=f(V_{DS}); T_C=80 °C; D=0; parameter t_p	I_D=f(V_{DS}); T_C=80 °C; D=0; parameter t_p

Downloaded from Arrow.com.

Table 14

Typ. output characteristics T_C=25 °C	Typ. output characteristics T_j=125 °C
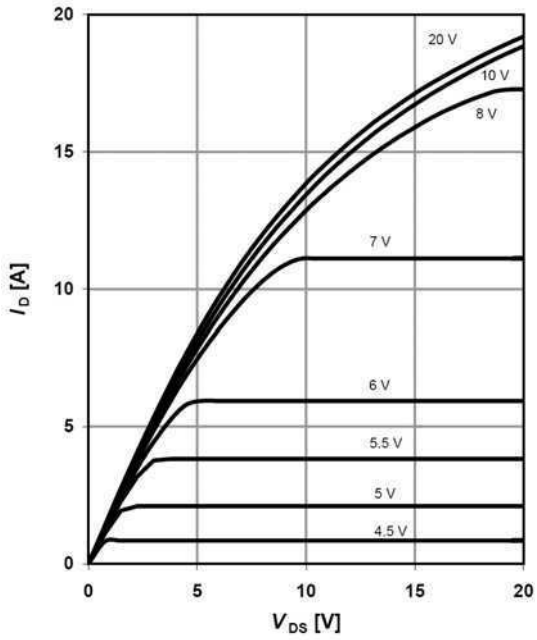	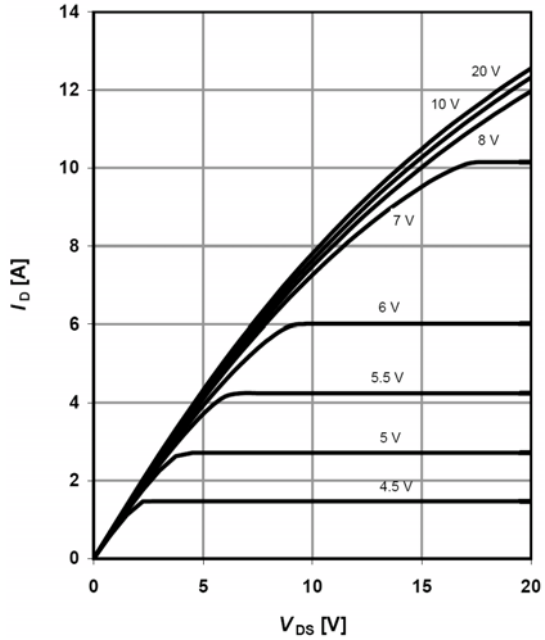
I_D=f(V_{DS}); T_j=25 °C; parameter: V_{GS}	I_D=f(V_{DS}); T_j=125 °C; parameter: V_{GS}

Table 15

Typ. drain-source on-state resistance	Drain-source on-state resistance
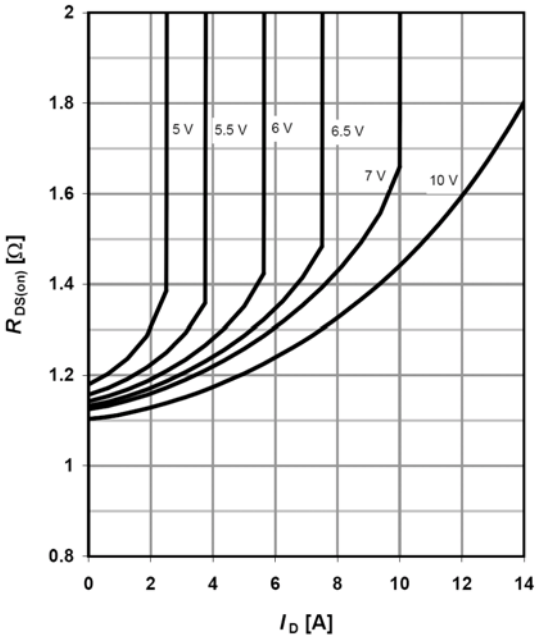	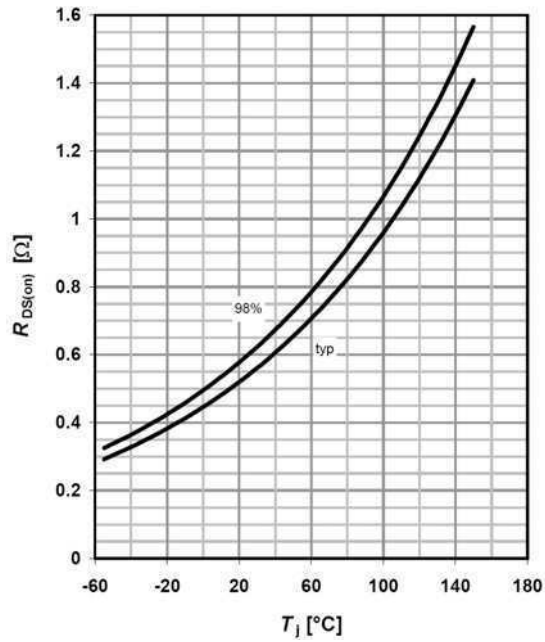
$R_{DS(on)}$=f(I_D); T_j=125 °C; parameter: V_{GS}	$R_{DS(on)}$=f(T_j); I_D=2.4 A; V_{GS}=10 V

Downloaded from Arrow.com.

Table 16

Typ. transfer characteristics	Typ. gate charge
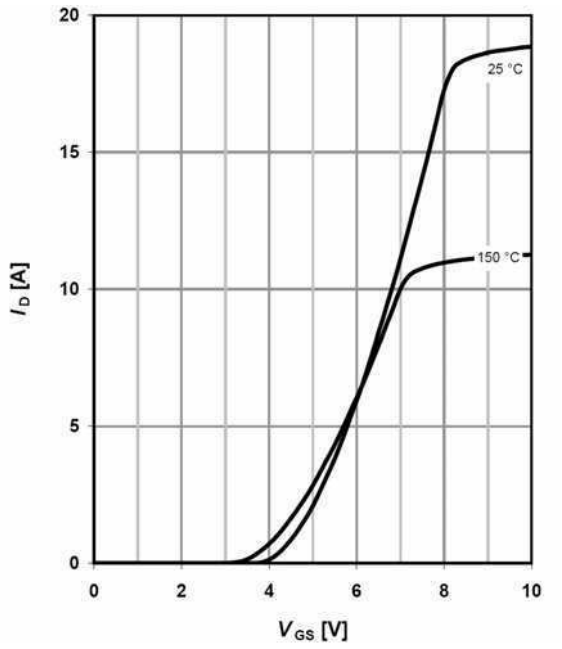	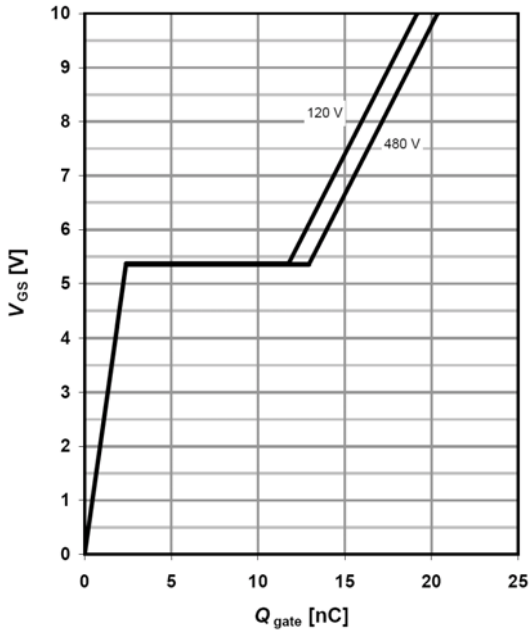
I_D=f(V_{GS}); V_{DS}=20V	V_{GS}=f(Q_{gate}), I_D=3.0A pulsed

Table 17

Avalanche energy	Drain-source breakdown voltage
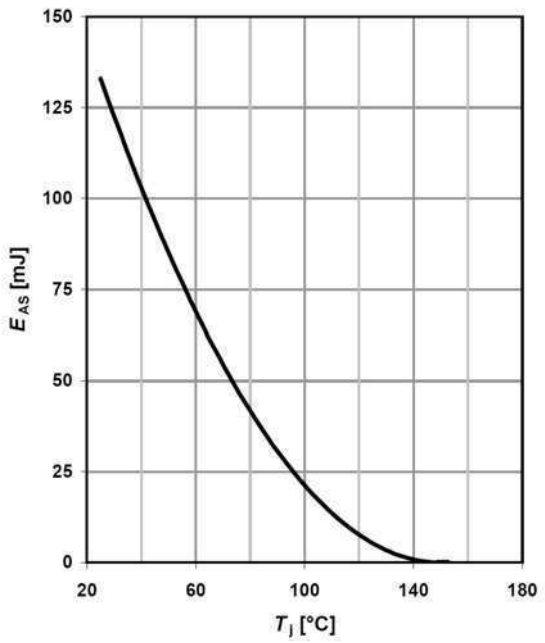	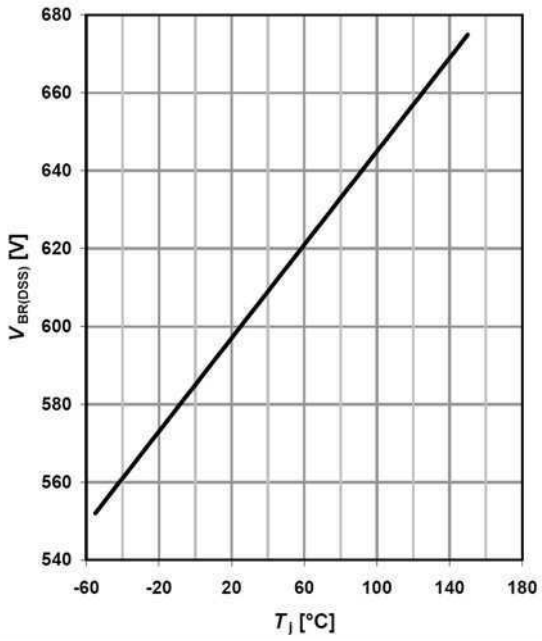
E_{AS}=f(T_j); I_D=1.3 A; V_{DD}=50 V	$V_{BR(DSS)}$=f(T_j); I_D=0.25 mA

Downloaded from Arrow.com.

Table 18

Typ. capacitances	Typ. C_{oss} stored energy
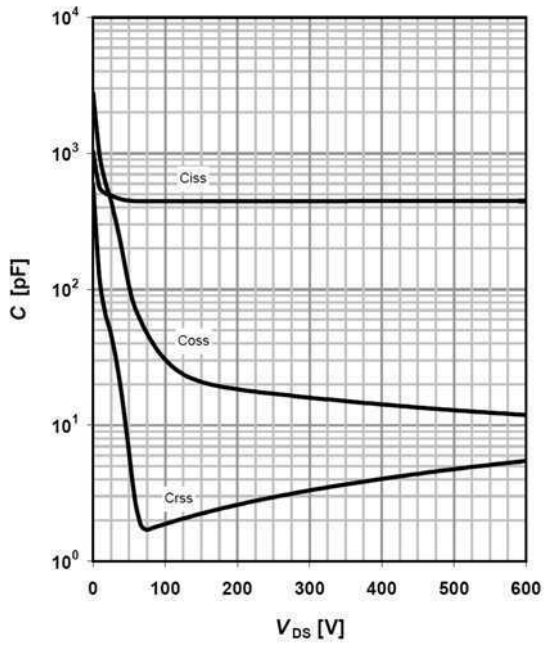	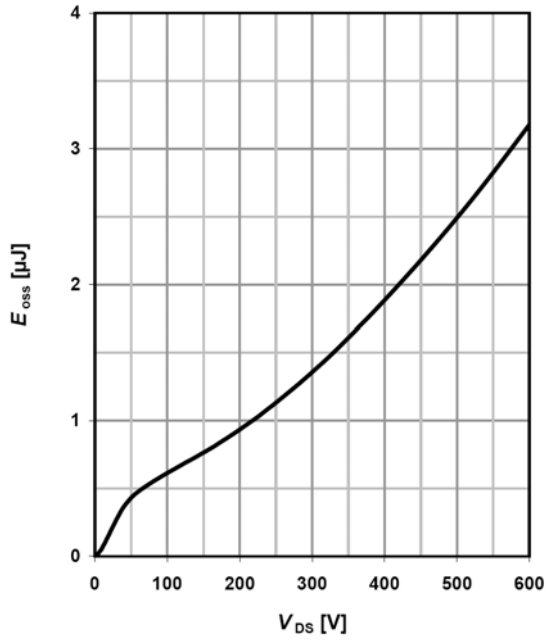
C=f(V_{DS}); V_{GS}=0 V; f=1 MHz	E_{oss}=f(V_{DS})

Table 19

Forward characteristics of reverse diode
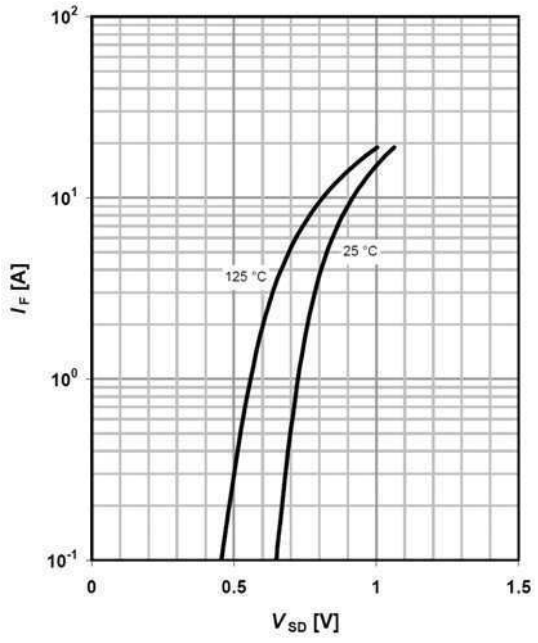
I_F=f(V_{SD}); parameter: T_j

Downloaded from Arrow.com.

6 Test circuits

Table 20 Switching times test circuit and waveform for inductive load

Switching times test circuit for inductive load	Switching time waveform
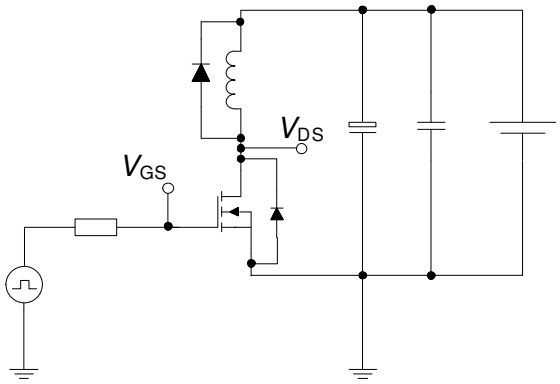	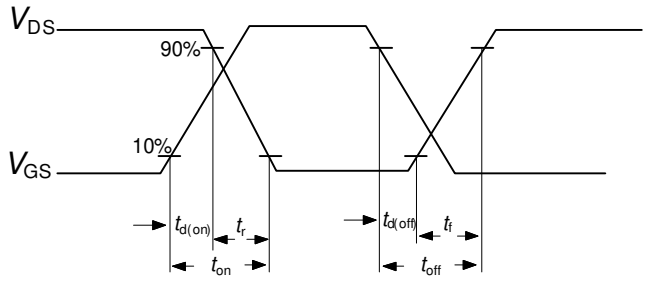

Table 21 Unclamped inductive load test circuit and waveform

Unclamped inductive load test circuit	Unclamped inductive waveform
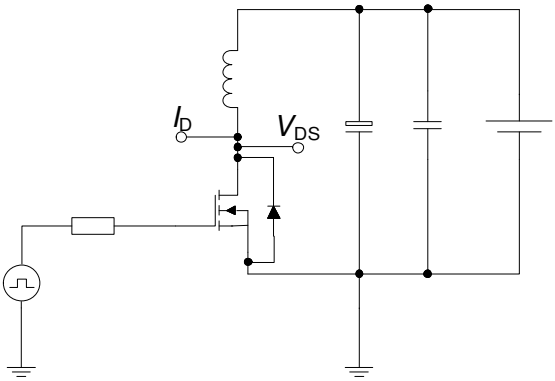	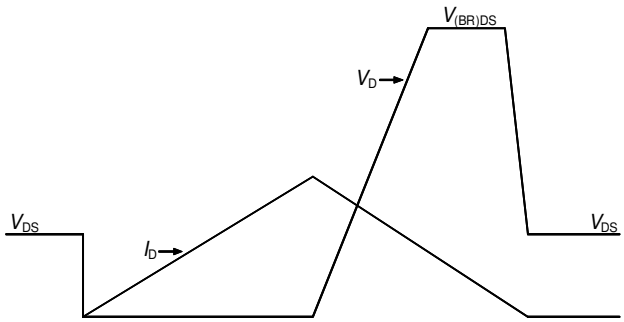

Table 22 Test circuit and waveform for diode characteristics

Test circuit for diode characteristics	Diode recovery waveform
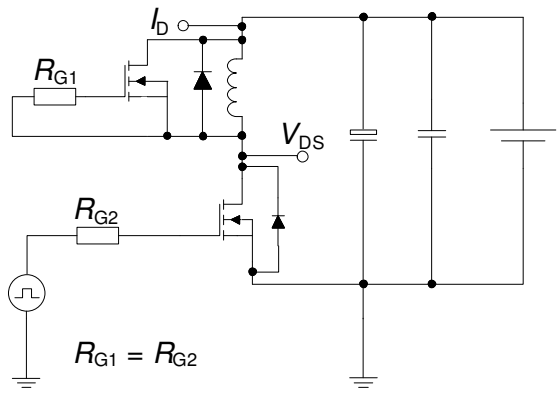	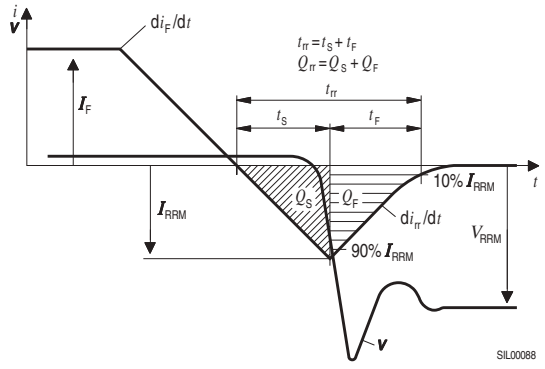

Downloaded from Arrow.com.

7 Package outlines

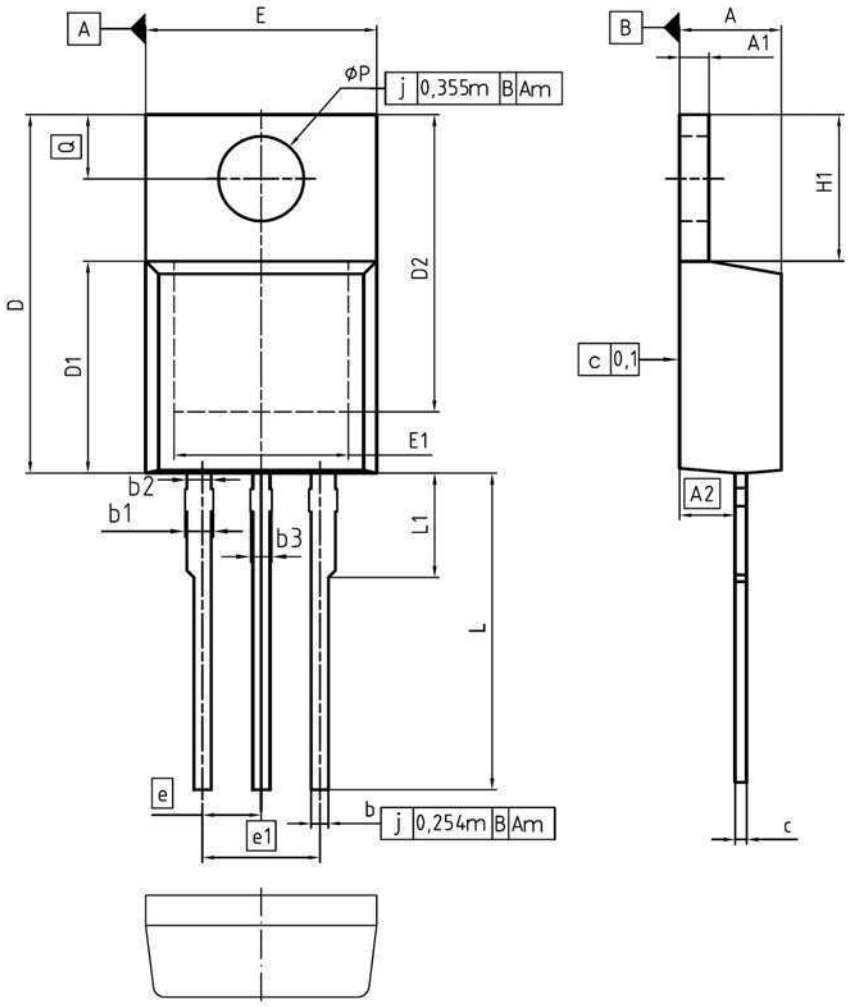

DIM	MILLIMETERS		INCHES	
	MIN	MAX	MIN	MAX
A	4.30	4.57	0.169	0.180
A1	1.17	1.40	0.046	0.055
A2	2.15	2.72	0.085	0.107
b	0.65	0.86	0.026	0.034
b1	0.95	1.40	0.037	0.055
b2	0.95	1.15	0.037	0.045
b3	0.65	1.15	0.026	0.045
c	0.33	0.60	0.013	0.024
D	14.81	15.95	0.583	0.628
D1	8.51	9.45	0.335	0.372
D2	12.19	13.10	0.480	0.516
E	9.70	10.36	0.382	0.408
E1	6.50	8.60	0.256	0.339
e	2.54		0.100	
e1	5.08		0.200	
N	3		3	
H1	5.90	6.90	0.232	0.272
L	13.00	14.00	0.512	0.551
L1	-	4.80	-	0.189
øP	3.60	3.89	0.142	0.153
Q	2.60	3.00	0.102	0.118

DOCUMENT NO.
Z8B00003318

SCALE 0 2.5 0 2.5 5mm

EUROPEAN PROJECTION

ISSUE DATE
23-08-2007

REVISION
05

Figure 1 Outlines TO-220, dimensions in mm/inches

Downloaded from Arrow.com.

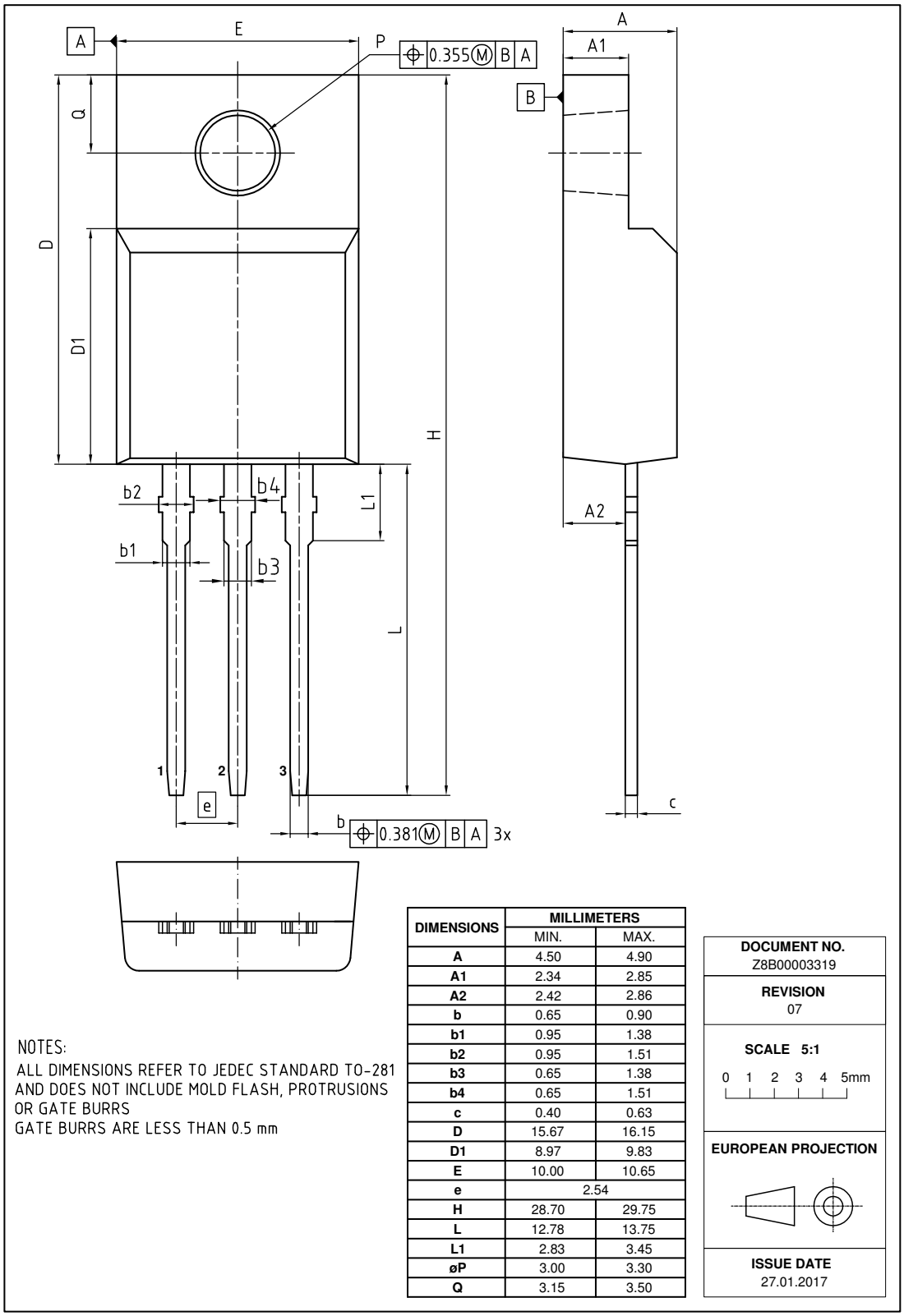

DIMENSIONS	MILLIMETERS	
	MIN.	MAX.
A	4.50	4.90
A1	2.34	2.85
A2	2.42	2.86
b	0.65	0.90
b1	0.95	1.38
b2	0.95	1.51
b3	0.65	1.38
b4	0.65	1.51
c	0.40	0.63
D	15.67	16.15
D1	8.97	9.83
E	10.00	10.65
e	2.54	
H	28.70	29.75
L	12.78	13.75
L1	2.83	3.45
øP	3.00	3.30
Q	3.15	3.50

NOTES:
ALL DIMENSIONS REFER TO JEDEC STANDARD TO-281 AND DOES NOT INCLUDE MOLD FLASH, PROTRUSIONS OR GATE BURRS
GATE BURRS ARE LESS THAN 0.5 mm

DOCUMENT NO.
Z8B00003319

REVISION
07

SCALE 5:1
0 1 2 3 4 5mm

EUROPEAN PROJECTION

ISSUE DATE
27.01.2017

Figure 2 Outline PG-TO 220 FullPAK, dimensions in mm

Downloaded from Arrow.com.

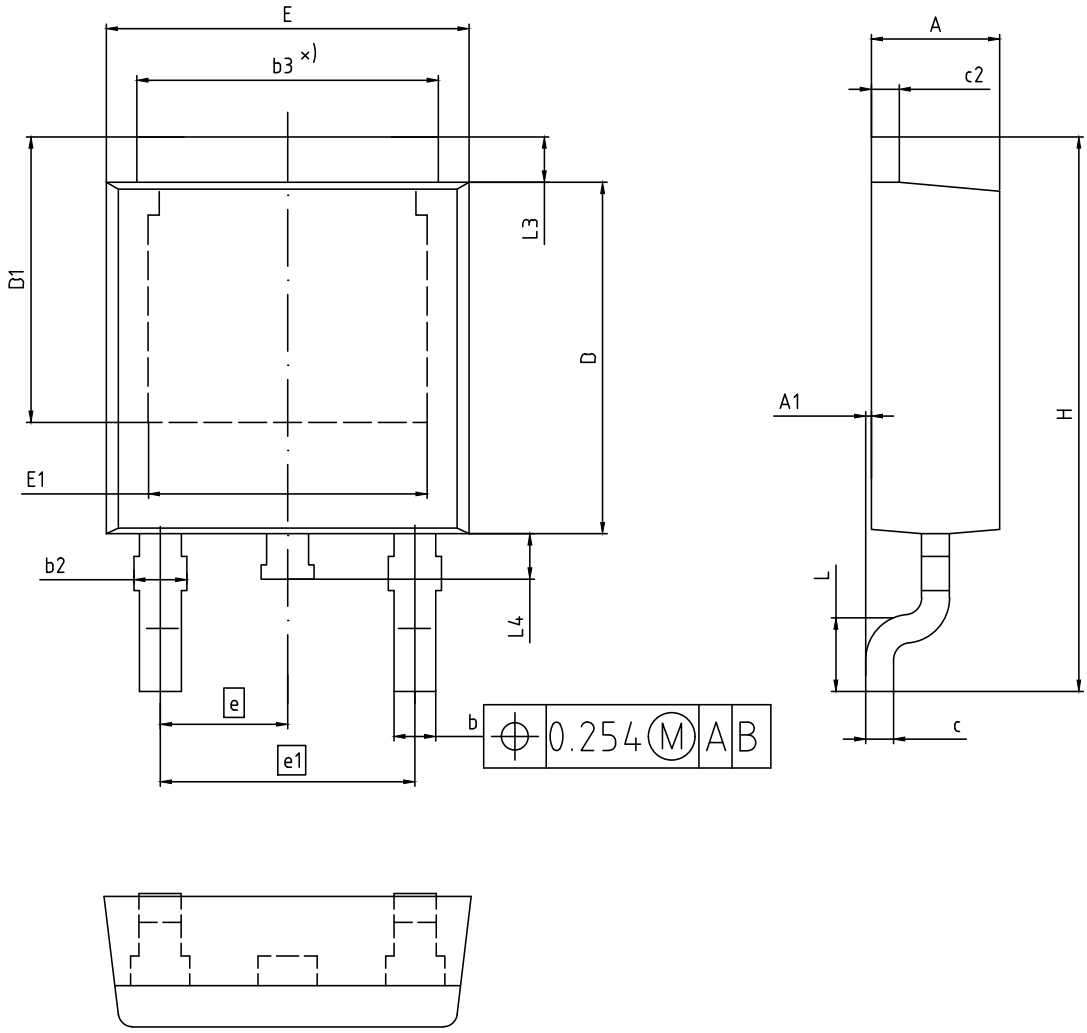

ALL DIMENSIONS REFER TO JEDEC
STANDARD TO-252 AND DO NOT INCLUDE MOLD
FLASH OR PROTRUSIONS.

DIMENSION	MILLIMETERS	
	MIN.	MAX.
A	2.16	2.41
A1	0.00	0.15
b	0.64	0.89
b2	0.65	1.15
b3	4,95	5.50
c	0.46	0.61
c2	0.40	0.98
D	5.97	6.22
D1	5.02	5.84
E	6.35	6.73
E1	4.32	5.50
e	2.29	
e1	4.57	
N	3	
H	9.40	10.48
L	1.18	1.78
L3	0.89	1.27
L4	0.51	1.02

DOCUMENT NO.
Z8B00003328

REVISION
07

SCALE:
10:1
0 1 2mm

EUROPEAN PROJECTION

ISSUE DATE
01.04.2020

Figure 3 Outlines TO-252, dimensions in mm

Downloaded from Arrow.com.

Revision History

IPx60R600E6

Revision: 2020-05-20, Rev. 2.4

Previous Revision

Revision	Date	Subjects (major changes since last revision)
2.0	2011-06-08	Release final data sheet
2.1	2011-09-14	-
2.2	2015-02-11	PG-TO220 FullPAK package outline update (creation:2014-12-10)
2.3	2018-03-04	Outline PG-TO-220 FullPAK update
2.4	2020-05-20	Update of the package outlines TO-252

Trademarks
All referenced product or service names and trademarks are the property of their respective owners.

We Listen to Your Comments
Any information within this document that you feel is wrong, unclear or missing at all? Your feedback will help us to continuously improve the quality of this document. Please send your proposal (including a reference to this document) to:
erratum@infineon.com

Published by
Infineon Technologies AG
81726 München, Germany
© 2020 Infineon Technologies AG
All Rights Reserved.

Legal Disclaimer
The information given in this document shall in no event be regarded as a guarantee of conditions or characteristics (“Beschaffenheitsgarantie”) .

With respect to any examples, hints or any typical values stated herein and/or any information regarding the application of the product, Infineon Technologies hereby disclaims any and all warranties and liabilities of any kind, including without limitation warranties of non-infringement of intellectual property rights of any third party.
In addition, any information given in this document is subject to customer’s compliance with its obligations stated in this document and any applicable legal requirements, norms and standards concerning customer’s products and any use of the product of Infineon Technologies in customer’s applications.
The data contained in this document is exclusively intended for technically trained staff. It is the responsibility of customer’s technical departments to evaluate the suitability of the product for the intended application and the completeness of the product information given in this document with respect to such application.

Information
For further information on technology, delivery terms and conditions and prices please contact your nearest Infineon Technologies Office (www.infineon.com).

Warnings
Due to technical requirements, components may contain dangerous substances. For information on the types in question, please contact the nearest Infineon Technologies Office.
The Infineon Technologies component described in this Data Sheet may be used in life-support devices or systems and/or automotive, aviation and aerospace applications or systems only with the express written approval of Infineon Technologies, if a failure of such components can reasonably be expected to cause the failure of that life-support, automotive, aviation and aerospace device or system or to affect the safety or effectiveness of that device or system. Life support devices or systems are intended to be implanted in the human body or to support and/or maintain and sustain and/or protect human life. If they fail, it is reasonable to assume that the health of the user or other persons may be endangered.

Downloaded from Arrow.com.