PD - 95353A

International
IOR Rectifier

SMPS MOSFET

IRFR12N25DPbF
IRFU12N25DPbF

HEXFET® Power MOSFET

V_{DSS}	$R_{DS(on)}$ max	I_D
250V	**0.26Ω**	**14A**

Applications

- High frequency DC-DC converters
- Lead-Free

Benefits

- Low Gate-to-Drain Charge to Reduce Switching Losses
- Fully Characterized Capacitance Including Effective C_{OSS} to Simplify Design, (See App. Note AN1001)
- Fully Characterized Avalanche Voltage and Current

D-Pak
IRFR12N25D

I-Pak
IRFU12N25D

Absolute Maximum Ratings

	Parameter	Max.	Units
I_D @ T_C = 25°C	Continuous Drain Current, V_{GS} @ 10V	14	A
I_D @ T_C = 100°C	Continuous Drain Current, V_{GS} @ 10V	9.7	
I_{DM}	Pulsed Drain Current ①	56	
P_D @T_C = 25°C	Power Dissipation	144	W
	Linear Derating Factor	0.96	W/°C
V_{GS}	Gate-to-Source Voltage	± 30	V
dv/dt	Peak Diode Recovery dv/dt ③	9.3	V/ns
T_J T_{STG}	Operating Junction and Storage Temperature Range	-55 to + 175	°C
	Soldering Temperature, for 10 seconds	300 (1.6mm from case)	

Thermal Resistance

	Parameter	Typ.	Max.	Units
$R_{\theta JC}$	Junction-to-Case	——	1.04	°C/W
$R_{\theta JA}$	Junction-to-Ambient (PCB mount)*	——	50	
$R_{\theta JA}$	Junction-to-Ambient	——	110	

Notes ① through ⑤ are on page 10

12/2/04

Static @ T_J = 25°C (unless otherwise specified)

	Parameter	Min.	Typ.	Max.	Units	Conditions
$V_{(BR)DSS}$	Drain-to-Source Breakdown Voltage	250	——	——	V	V_{GS} = 0V, I_D = 250µA
$\Delta V_{(BR)DSS}/\Delta T_J$	Breakdown Voltage Temp. Coefficient	——	0.29	——	V/°C	Reference to 25°C, I_D = 1mA ⑥
$R_{DS(on)}$	Static Drain-to-Source On-Resistance	——	——	0.26	Ω	V_{GS} = 10V, I_D = 8.4A ④
$V_{GS(th)}$	Gate Threshold Voltage	3.0	——	5.0	V	V_{DS} = V_{GS}, I_D = 250µA
I_{DSS}	Drain-to-Source Leakage Current	——	——	25	µA	V_{DS} = 200V, V_{GS} = 0V
		——	——	250		V_{DS} = 160V, V_{GS} = 0V, T_J = 150°C
I_{GSS}	Gate-to-Source Forward Leakage	——	——	100	nA	V_{GS} = 30V
	Gate-to-Source Reverse Leakage	——	——	-100		V_{GS} = -30V

Dynamic @ T_J = 25°C (unless otherwise specified)

	Parameter	Min.	Typ.	Max.	Units	Conditions
g_{fs}	Forward Transconductance	6.8	——	——	S	V_{DS} = 25V, I_D = 8.4A
Q_g	Total Gate Charge	——	23	35	nC	I_D = 8.4A
Q_{gs}	Gate-to-Source Charge	——	5.8	8.7		V_{DS} = 200V
Q_{gd}	Gate-to-Drain ("Miller") Charge	——	12	19		V_{GS} = 10V, ④
$t_{d(on)}$	Turn-On Delay Time	——	9.1	——	ns	V_{DD} = 125V
t_r	Rise Time	——	25	——		I_D = 8.4A
$t_{d(off)}$	Turn-Off Delay Time	——	16	——		R_G = 6.8Ω
t_f	Fall Time	——	9.2	——		V_{GS} = 10V ④
C_{iss}	Input Capacitance	——	810	——	pF	V_{GS} = 0V
C_{oss}	Output Capacitance	——	130	——		V_{DS} = 25V
C_{rss}	Reverse Transfer Capacitance	——	22	——		f = 1.0MHz
C_{oss}	Output Capacitance	——	1100	——		V_{GS} = 0V, V_{DS} = 1.0V, f = 1.0MHz
C_{oss}	Output Capacitance	——	50	——		V_{GS} = 0V, V_{DS} = 200V, f = 1.0MHz
C_{oss} eff.	Effective Output Capacitance	——	130	——		V_{GS} = 0V, V_{DS} = 0V to 200V ⑤

Avalanche Characteristics

	Parameter	Typ.	Max.	Units
E_{AS}	Single Pulse Avalanche Energy②	——	250	mJ
I_{AR}	Avalanche Current①	——	8.4	A
E_{AR}	Repetitive Avalanche Energy①	——	14	mJ

Diode Characteristics

	Parameter	Min.	Typ.	Max.	Units	Conditions
I_S	Continuous Source Current (Body Diode)	——	——	14	A	MOSFET symbol showing the integral reverse p-n junction diode. 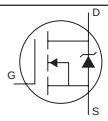
I_{SM}	Pulsed Source Current (Body Diode) ①	——	——	56		
V_{SD}	Diode Forward Voltage	——	——	1.5	V	T_J = 25°C, I_S = 8.4A, V_{GS} = 0V ④
t_{rr}	Reverse Recovery Time	——	140	——	ns	T_J = 25°C, I_F = 8.4A
Q_{rr}	Reverse RecoveryCharge	——	710	——	nC	di/dt = 100A/µs ④
t_{on}	Forward Turn-On Time	Intrinsic turn-on time is negligible (turn-on is dominated by L_S+L_D)				

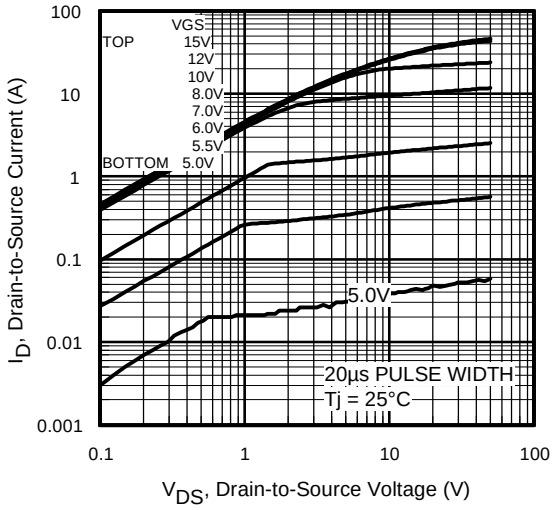

Fig 1. Typical Output Characteristics

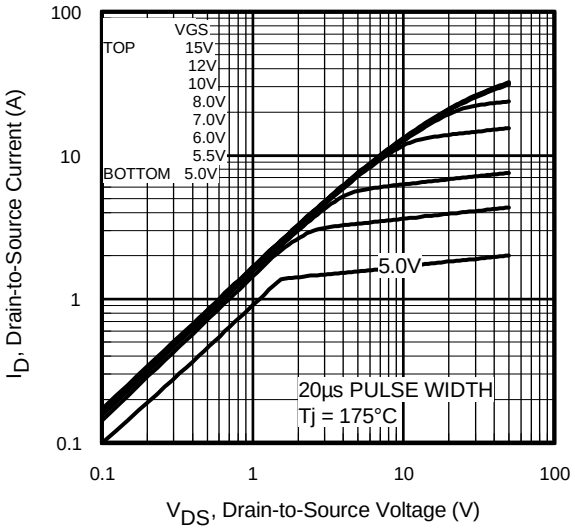

Fig 2. Typical Output Characteristics

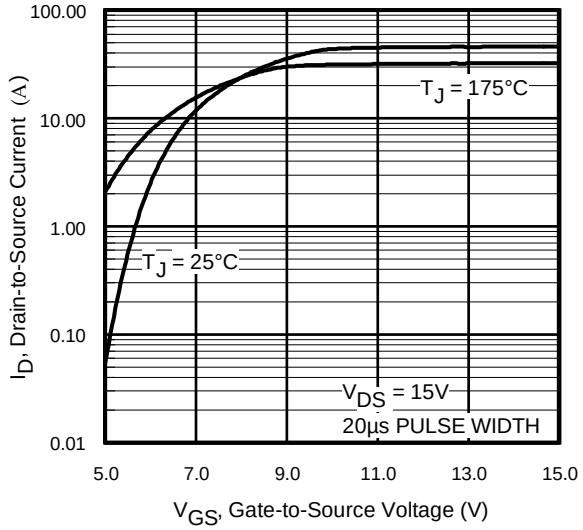

Fig 3. Typical Transfer Characteristics

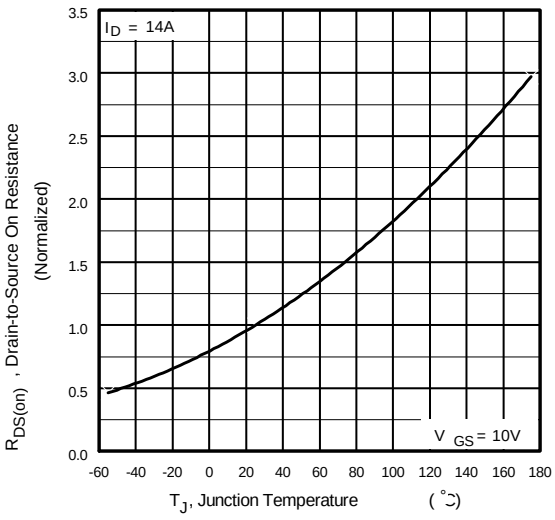

Fig 4. Normalized On-Resistance Vs. Temperature

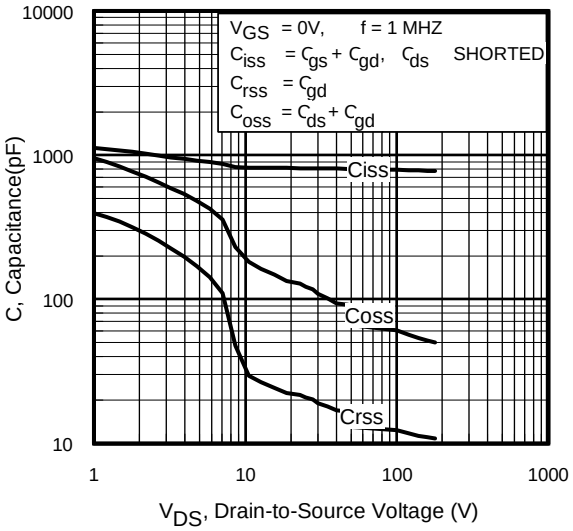

Fig 5. Typical Capacitance Vs. Drain-to-Source Voltage

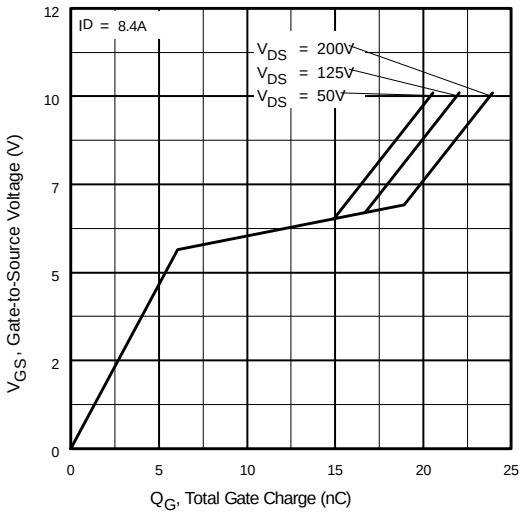

Fig 6. Typical Gate Charge Vs. Gate-to-Source Voltage

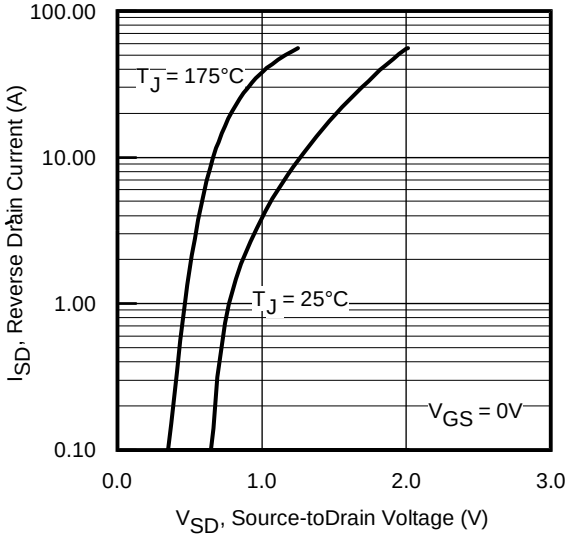

Fig 7. Typical Source-Drain Diode Forward Voltage

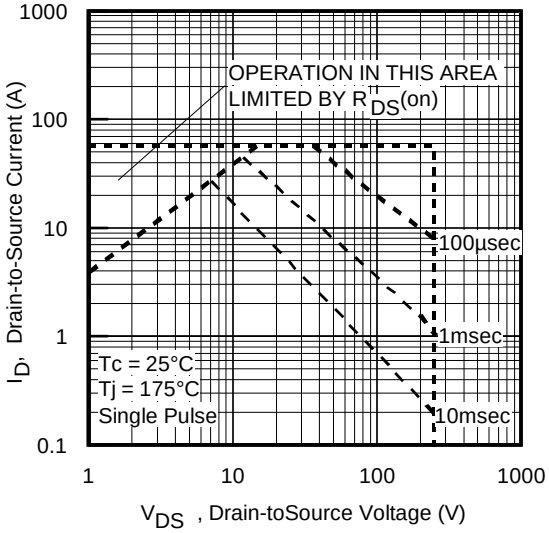

Fig 8. Maximum Safe Operating Area

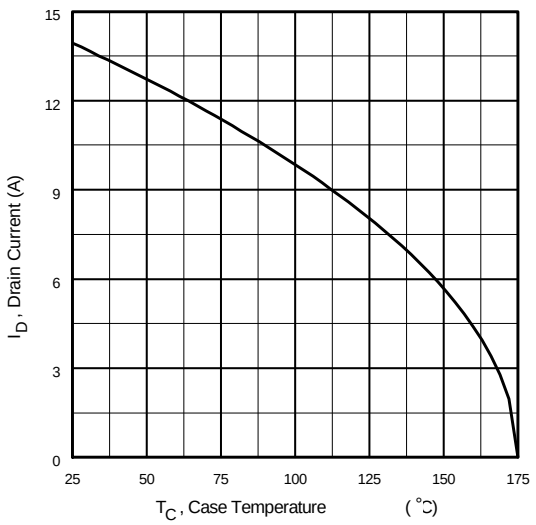

Fig 9. Maximum Drain Current Vs. Case Temperature

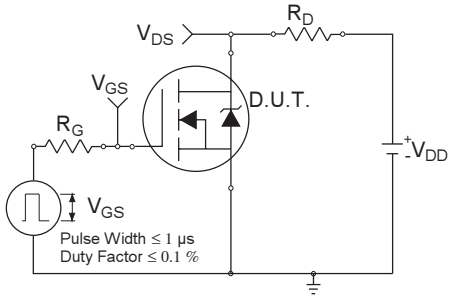

Fig 10a. Switching Time Test Circuit

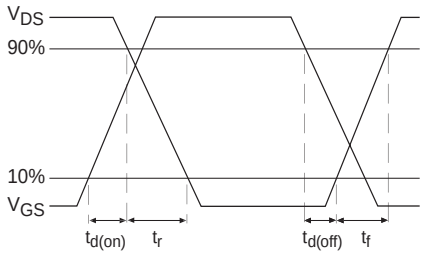

Fig 10b. Switching Time Waveforms

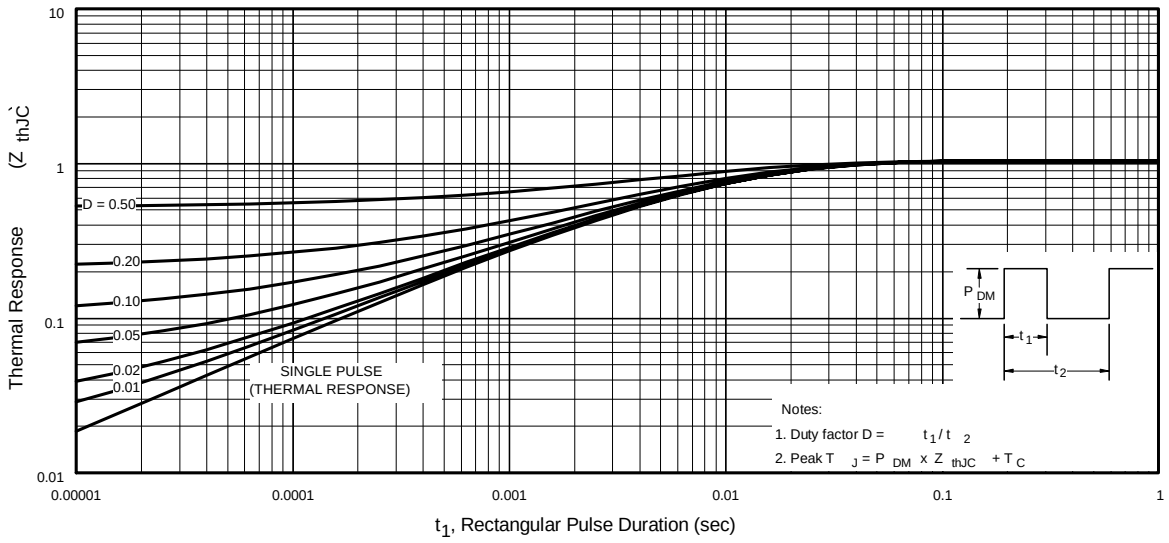

Fig 11. Maximum Effective Transient Thermal Impedance, Junction-to-Case

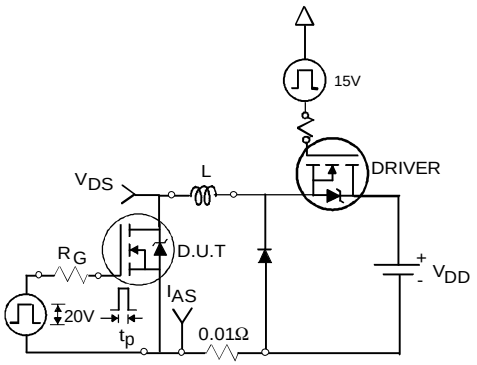

Fig 12a. Unclamped Inductive Test Circuit

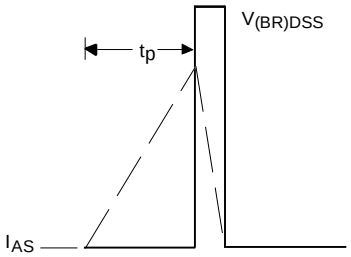

Fig 12b. Unclamped Inductive Waveforms

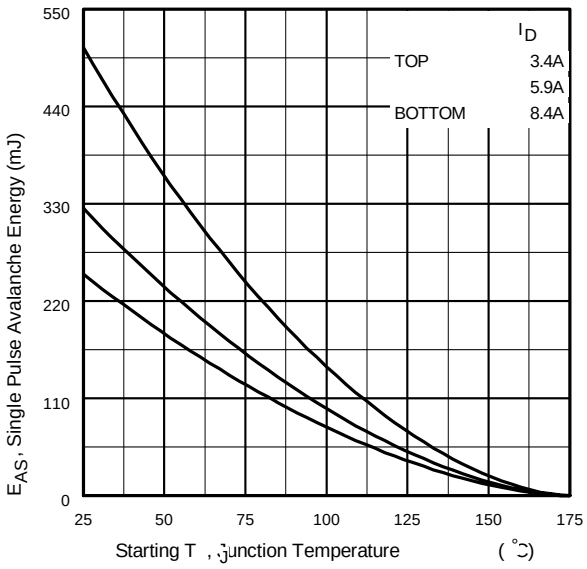

Fig 12c. Maximum Avalanche Energy Vs. Drain Current

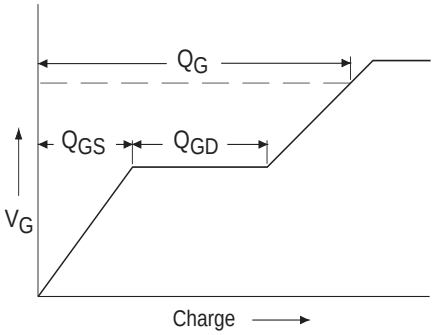

Fig 13a. Basic Gate Charge Waveform

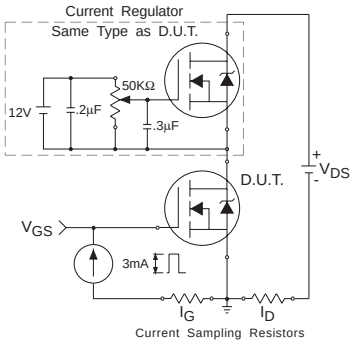

Fig 13b. Gate Charge Test Circuit

Peak Diode Recovery dv/dt Test Circuit

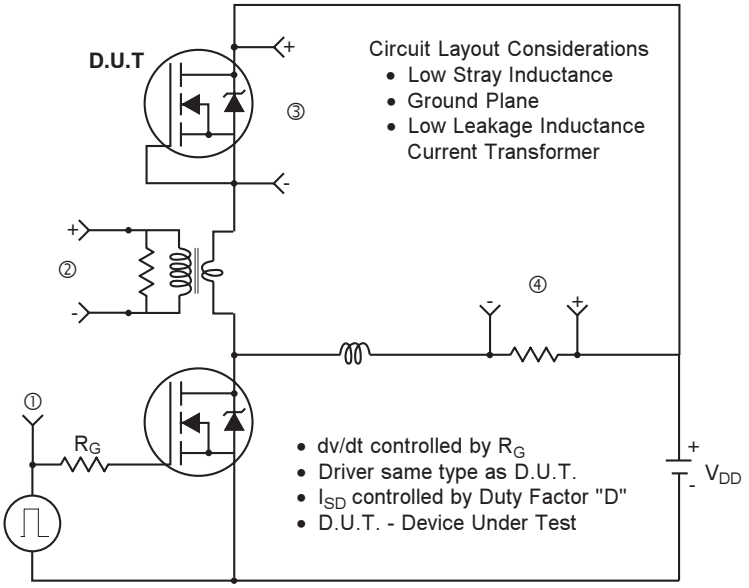

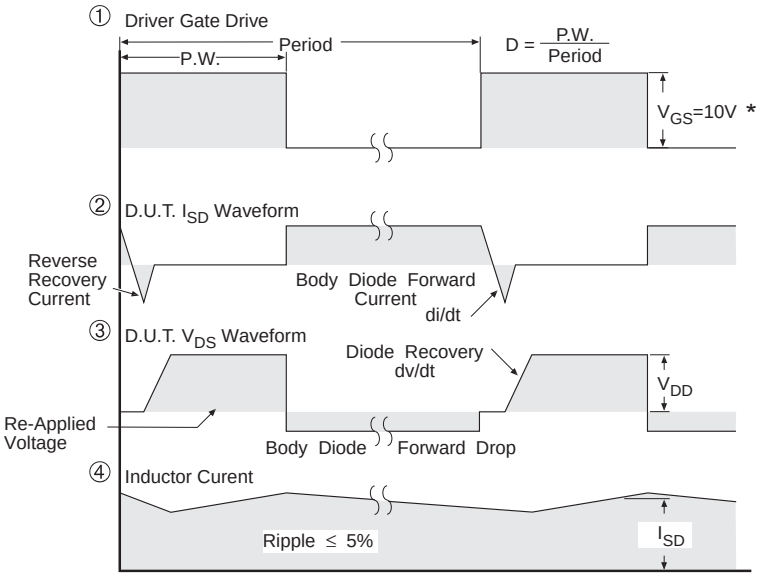

* V_{GS} = 5V for Logic Level Devices

Fig 14. For N-Channel HEXFET® Power MOSFETs

D-Pak (TO-252AA) Package Outline

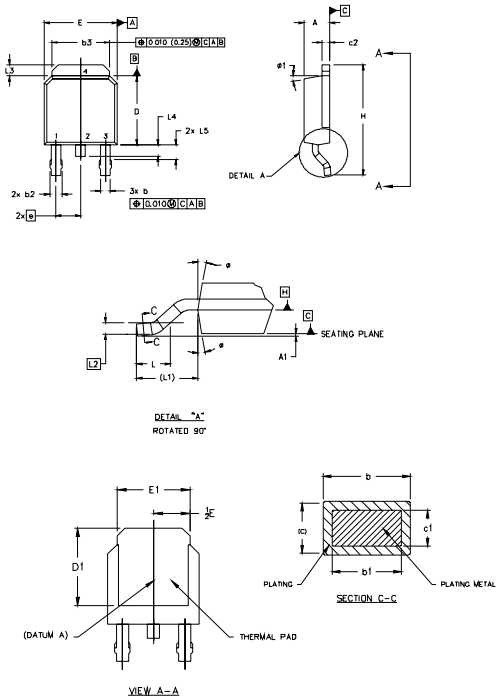

NOTES:

1.0 DIMENSIONING AND TOLERANCING PER ASME Y14.5 M- 1994.
2.0 DIMENSIONS ARE SHOWN IN INCHES [MILLIMETERS].
3.0 LEAD DIMENSION UNCONTROLLED IN L5
4.0 DIMENSION D1 AND E1 ESTABLISH A MINIMUM MOUNTING SURFACE FOR THERMAL PAD.
5.0 SECTION C-C DIMENSIONS APPLY TO THE FLAT SECTION OF THE LEAD BETWEEN .005 [0.127] AND .010 [0.2540 FROM THE LEAD TIP.
6.0 DIMENSION D & E DO NOT INCLUDE MOLD FLASH. MOLD FLASH SHALL NOT EXCEED .005" (0.127) PER SIDE. THESE DIMENSIONS ARE MEASURED AT THE OUTERMOST EXTREMES OF THE PLASTIC BODY.
7.0 OUTLINE CONFORMS TO JEDEC OUTLINE TO-252AA.

SYMBOL	DIMENSIONS				NOTES
	MILLIMETERS		INCHES		
	MIN.	MAX.	MIN.	MAX.	
A	2.18	2.39	.086	.094	
A1		0.13		.005	
b	0.64	0.89	.025	.035	5
b1	0.64	0.79	.025	0.031	5
b2	0.76	1.14	.030	.045	
b3	4.95	5.46	.195	.215	
c	0.46	0.61	.018	.024	5
c1	0.41	0.56	.016	.022	5
c2	.046	0.89	.018	.035	5
D	5.97	6.22	.235	.245	6
D1	5.21	–	.205	–	4
E	6.35	6.73	.250	.265	6
E1	4.32	–	.170		4
e	2.29		.090 BSC		
H	9.40	10.41	.370	.410	
L	1.40	1.78	.055	.070	
L1	2.74 REF.		.108 REF.		
L2	0.051 BSC		.020 BSC		
L3	0.89	1.27	.035	.050	
L4		1.02		.040	
L5	1.14	1.52	.045	.060	3
ø	0°	10°	0°	10°	
ø1	0°	15°	0°	15°	

LEAD ASSIGNMENTS

HEXFET

1.- GATE
2.- DRAIN
3.- SOURCE
4.- DRAIN

IGBTs, CoPACK

1.- GATE
2.- COLLECTOR
3.- EMITTER
4.- COLLECTOR

D-Pak (TO-252AA) Part Marking Information

EXAMPLE: THIS IS AN IRFR120
WITH ASSEMBLY
LOT CODE 1234
ASSEMBLED ON WW 16, 1999
IN THE ASSEMBLY LINE "A"

Note: "P" in assembly line position indicates "Lead-Free"

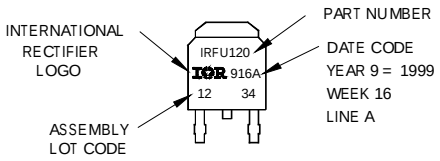

OR

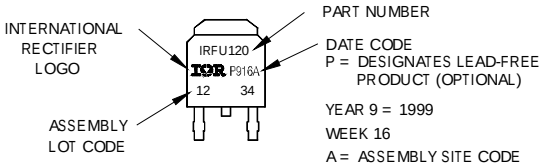

I-Pak (TO-251AA) Package Outline

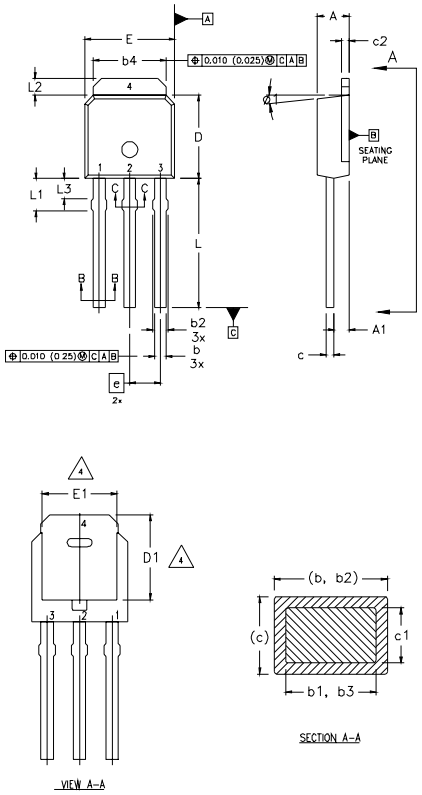

NOTES:

1. DIMENSIONING AND TOLERANCING PER ASME Y14.5 M- 1994.
2. DIMENSIONS ARE SHOWN IN MILLIMETERS [INCHES].
3. DIMENSION D & E DO NOT INCLUDE MOLD FLASH. MOLD FLASH SHALL NOT EXCEED 0.005" (0.127) PER SIDE. THESE DIMENSIONS ARE MEASURED AT THE OUTERMOST EXTREMES OF THE PLASTIC BODY.
4. THERMAL PAD CONTOUR OPTION WITHIN DIMENSION b4, L2, E1 & D1.
5. LEAD DIMENSION UNCONTROLLED IN L3.
6. DIMENSION b1, b3 APPLY TO BASE METAL ONLY.
7. OUTLINE CONFORMS TO JEDEC OUTLINE TO-251AA.
8. CONTROLLING DIMENSION : INCHES.

SYMBOL	DIMENSIONS				NOTES
	MILLIMETERS		INCHES		
	MIN.	MAX.	MIN.	MAX.	
A	2.18	2.39	0.086	.094	
A1	0.89	1.14	0.035	0.045	
b	0.64	0.89	0.025	0.035	
b1	0.64	0.79	0.025	0.031	4
b2	0.76	1.14	0.030	0.045	
b3	0.76	1.04	0.030	0.041	
b4	5.00	5.46	0.195	0.215	4
c	0.46	0.61	0.018	0.024	
c1	0.41	0.56	0.016	0.022	
c2	.046	0.86	0.018	0.035	
D	5.97	6.22	0.235	0.245	3, 4
D1	5.21	–	0.205	–	4
E	6.35	6.73	0.250	0.265	3, 4
E1	4.32	–	0.170	–	4
e	2.29		0.090 BSC		
L	8.89	9.60	0.350	0.380	
L1	1.91	2.29	0.075	0.090	
L2	0.89	1.27	0.035	0.050	4
L3	1.14	1.52	0.045	0.060	5
ø1	0°	15°	0°	15°	

LEAD ASSIGNMENTS

HEXFET

1.- GATE
2.- DRAIN
3.- SOURCE
4.- DRAIN

I-Pak (TO-251AA) Part Marking Information

EXAMPLE: THIS IS AN IRFU120
WITH ASSEMBLY
LOT CODE 5678
ASSEMBLED ON WW 19, 1999
IN THE ASSEMBLY LINE "A"

Note: "P" in assembly line position indicates "Lead-Free"

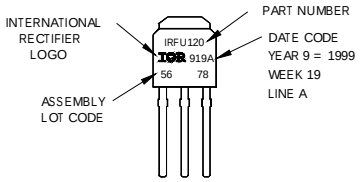

OR

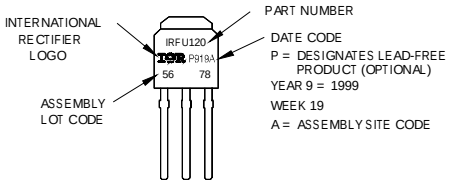

International
IOR Rectifier

D-Pak (TO-252AA) Tape & Reel Information

Dimensions are shown in millimeters (inches)

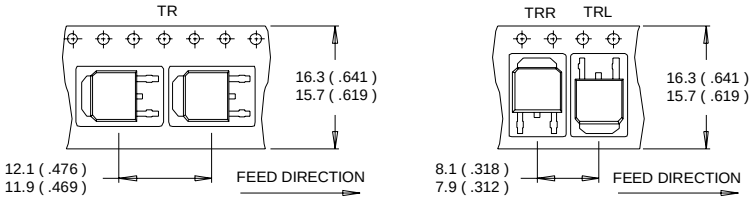

NOTES :
1. CONTROLLING DIMENSION : MILLIMETER.
2. ALL DIMENSIONS ARE SHOWN IN MILLIMETERS (INCHES).
3. OUTLINE CONFORMS TO EIA-481 & EIA-541.

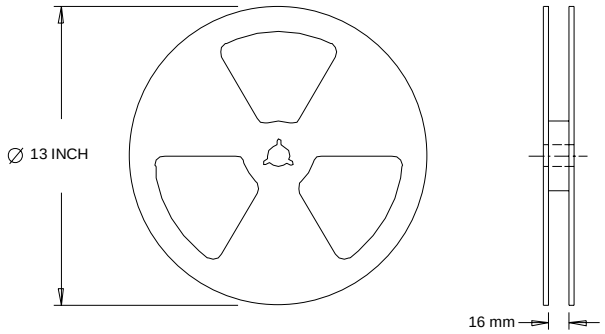

NOTES :
1. OUTLINE CONFORMS TO EIA-481.

Notes:

① Repetitive rating; pulse width limited by max. junction temperature.

② Starting T_J = 25°C, L = 7.1mH R_G = 25Ω, I_{AS} = 8.4A.

③ $I_{SD} \leq$ 8.4A, di/dt $\leq$ 150A/µs, $V_{DD} \leq V_{(BR)DSS}$, $T_J \leq$ 175°C

④ Pulse width $\leq$ 300µs; duty cycle $\leq$ 2%.

⑤ C_{oss} eff. is a fixed capacitance that gives the same charging time as C_{oss} while V_{DS} is rising from 0 to 80% V_{DSS}

* When mounted on 1" square PCB (FR-4 or G-10 Material).
For recommended footprint and soldering techniques refer to application note #AN-994.

Data and specifications subject to change without notice.
This product has been designed and qualified for the Automotive [Q101] market.
Qualification Standards can be found on IR's Web site.

International
IOR Rectifier

IR WORLD HEADQUARTERS: 233 Kansas St., El Segundo, California 90245, USA Tel: (310) 252-7105
TAC Fax: (310) 252-7903
Visit us at www.irf.com for sales contact information.12/04

Note: For the most current drawings please refer to the IR website at:
http://www.irf.com/package/