PD - 94953

International
IOR Rectifier

IRL2203NPbF

HEXFET® Power MOSFET

- Advanced Process Technology
- Ultra Low On-Resistance
- Dynamic dv/dt Rating
- 175°C Operating Temperature
- Fast Switching
- Fully Avalanche Rated
- Lead-Free

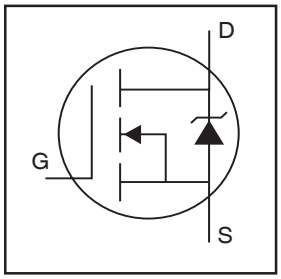

V_{DSS} = 30V

$R_{DS(on)}$ = 7.0mΩ

I_D = 116A⑦

Description

Advanced HEXFET® Power MOSFETs from International Rectifier utilize advanced processing techniques to achieve extremely low on-resistance per silicon area. This benefit, combined with the fast switching speed and ruggedized device design that HEXFET power MOSFETs are well known for, provides the designer with an extremely efficient and reliable device for use in a wide variety of applications.

The TO-220 package is universally preferred for all commercial-industrial applications at power dissipation levels to approximately 50 watts. The low thermal resistance and low package cost of the TO-220 contribute to its wide acceptance throughout the industry.

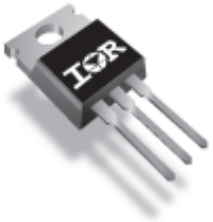

TO-220AB

Absolute Maximum Ratings

	Parameter	Max.	Units
I_D @ T_C = 25°C	Continuous Drain Current, V_{GS} @ 10V	116⑦	A
I_D @ T_C = 100°C	Continuous Drain Current, V_{GS} @ 10V	82	
I_{DM}	Pulsed Drain Current ①	400	
P_D @T_C = 25°C	Power Dissipation	180	W
	Linear Derating Factor	1.2	W/°C
V_{GS}	Gate-to-Source Voltage	± 16	V
I_{AR}	Avalanche Current①	60	A
E_{AR}	Repetitive Avalanche Energy①	18	mJ
dv/dt	Peak Diode Recovery dv/dt ③	5.0	V/ns
T_J T_{STG}	Operating Junction and Storage Temperature Range	-55 to + 175	°C
	Soldering Temperature, for 10 seconds	300 (1.6mm from case)	
	Mounting torque, 6-32 or M3 srew	10 lbf•in (1.1N•m)	

Thermal Resistance

	Parameter	Typ.	Max.	Units
$R_{\theta JC}$	Junction-to-Case	——	0.85	°C/W
$R_{\theta CS}$	Case-to-Sink, Flat, Greased Surface	0.50	——	
$R_{\theta JA}$	Junction-to-Ambient	——	62	

Electrical Characteristics @ T_J = 25°C (unless otherwise specified)

	Parameter	Min.	Typ.	Max.	Units	Conditions
$V_{(BR)DSS}$	Drain-to-Source Breakdown Voltage	30	—	—	V	V_{GS} = 0V, I_D = 250µA
$\Delta V_{(BR)DSS}/\Delta T_J$	Breakdown Voltage Temp. Coefficient	—	0.029	—	V/°C	Reference to 25°C, I_D = 1mA
$R_{DS(on)}$	Static Drain-to-Source On-Resistance	—	—	7.0	mΩ	V_{GS} = 10V, I_D = 60A ④
		—	—	10		V_{GS} = 4.5V, I_D = 48A ④
$V_{GS(th)}$	Gate Threshold Voltage	1.0	—	—	V	V_{DS} = V_{GS}, I_D = 250µA
g_{fs}	Forward Transconductance	73	—	—	S	V_{DS} = 25V, I_D = 60A④
I_{DSS}	Drain-to-Source Leakage Current	—	—	25	µA	V_{DS} = 30V, V_{GS} = 0V
		—	—	250		V_{DS} = 24V, V_{GS} = 0V, T_J = 125°C
I_{GSS}	Gate-to-Source Forward Leakage	—	—	100	nA	V_{GS} = 16V
	Gate-to-Source Reverse Leakage	—	—	-100		V_{GS} = -16V
Q_g	Total Gate Charge	—	—	60	nC	I_D = 60A
Q_{gs}	Gate-to-Source Charge	—	—	14		V_{DS} = 24V
Q_{gd}	Gate-to-Drain ("Miller") Charge	—	—	33		V_{GS} = 4.5V, See Fig. 6 and 13
$t_{d(on)}$	Turn-On Delay Time	—	11	—		V_{DD} = 15V
t_r	Rise Time	—	160	—		I_D = 60A
$t_{d(off)}$	Turn-Off Delay Time	—	23	—		R_G = 1.8Ω
t_f	Fall Time	—	66	—		V_{GS} = 4.5V, See Fig. 10 ④
L_D	Internal Drain Inductance	—	4.5	—	nH	Between lead, 6mm (0.25in.) from package and center of die contact
L_S	Internal Source Inductance	—	7.5	—		
C_{iss}	Input Capacitance	—	3290	—	pF	V_{GS} = 0V
C_{oss}	Output Capacitance	—	1270	—		V_{DS} = 25V
C_{rss}	Reverse Transfer Capacitance	—	170	—		f = 1.0MHz, See Fig. 5
E_{AS}	Single Pulse Avalanche Energy②	—	1320⑤	290⑥	mJ	I_{AS} = 60A, L = 0.16mH

Source-Drain Ratings and Characteristics

	Parameter	Min.	Typ.	Max.	Units	Conditions
I_S	Continuous Source Current (Body Diode)	—	—	116⑦	A	MOSFET symbol showing the integral reverse p-n junction diode.
I_{SM}	Pulsed Source Current (Body Diode)①	—	—	400		
V_{SD}	Diode Forward Voltage	—	—	1.2	V	T_J = 25°C, I_S = 60A, V_{GS} = 0V ④
t_{rr}	Reverse Recovery Time	—	56	84	ns	T_J = 25°C, I_F = 60A
Q_{rr}	Reverse Recovery Charge	—	110	170	nC	di/dt = 100A/µs ④
t_{on}	Forward Turn-On Time	Intrinsic turn-on time is negligible (turn-on is dominated by L_S+L_D)				

Notes:

① Repetitive rating; pulse width limited by max. junction temperature. (See fig. 11)

② Starting T_J = 25°C, L = 0.16mH
R_G = 25Ω, I_{AS} = 60A, V_{GS}=10V (See Figure 12)

③ I_{SD} ≤ 60A, di/dt ≤ 110A/µs, V_{DD} ≤ $V_{(BR)DSS}$, T_J ≤ 175°C

④ Pulse width ≤ 400µs; duty cycle ≤ 2%.

⑤ This is a typical value at device destruction and represents operation outside rated limits.

⑥ This is a calculated value limited to T_J = 175°C .

⑦ Calculated continuous current based on maximum allowable junction temperature. Package limitation current is 75A.

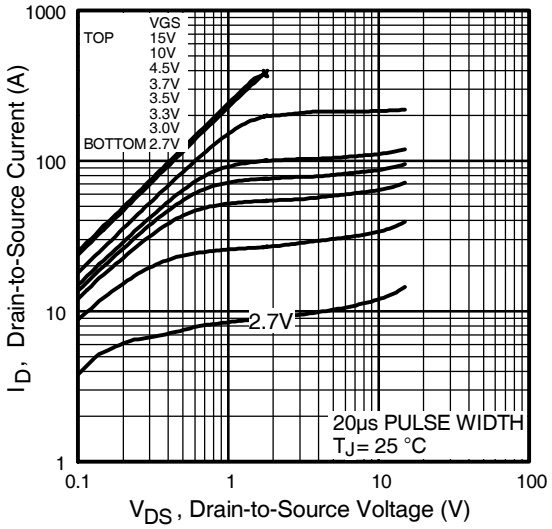

Fig 1. Typical Output Characteristics

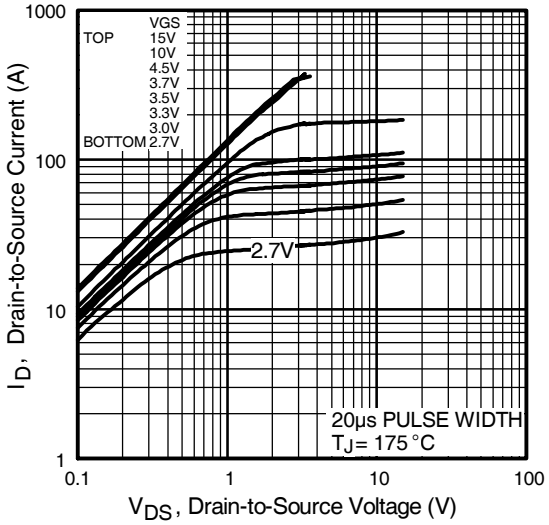

Fig 2. Typical Output Characteristics

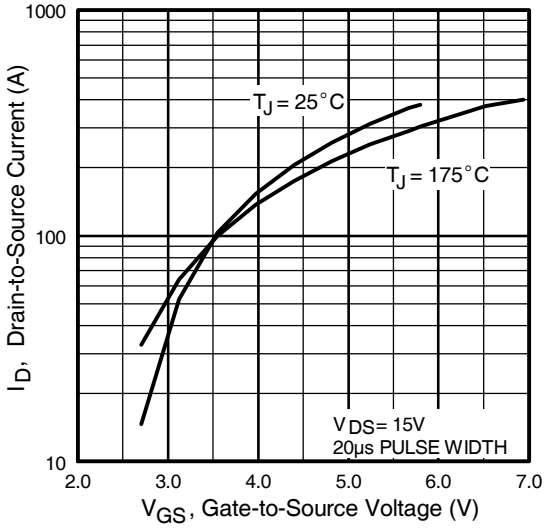

Fig 3. Typical Transfer Characteristics

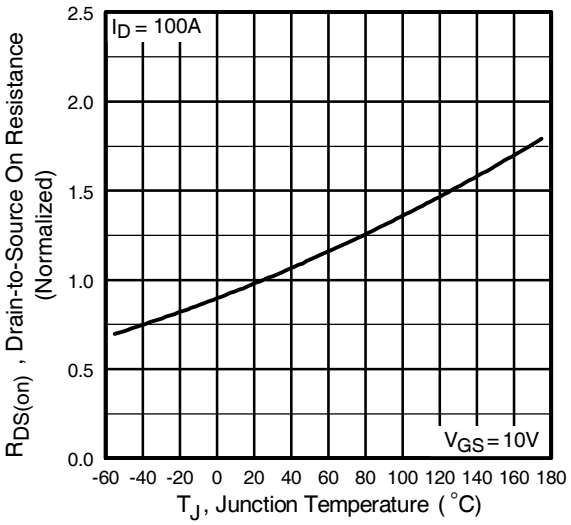

Fig 4. Normalized On-Resistance Vs. Temperature

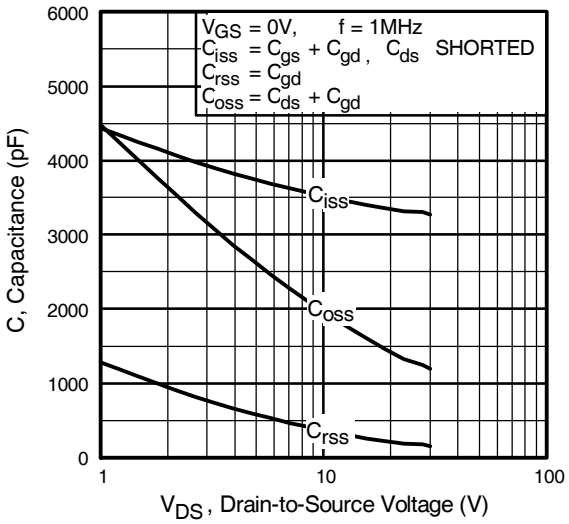

Fig 5. Typical Capacitance Vs. Drain-to-Source Voltage

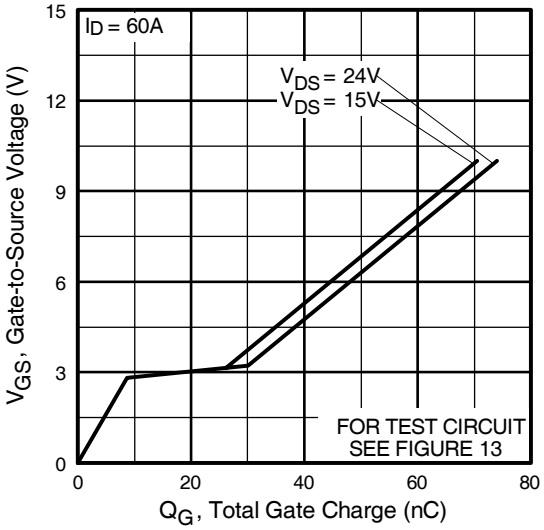

Fig 6. Typical Gate Charge Vs. Gate-to-Source Voltage

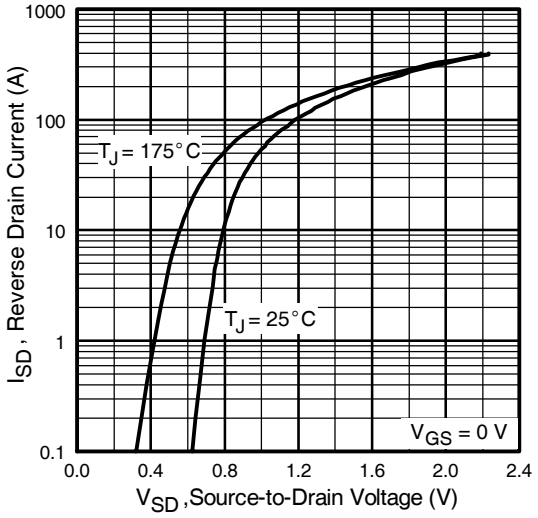

Fig 7. Typical Source-Drain Diode Forward Voltage

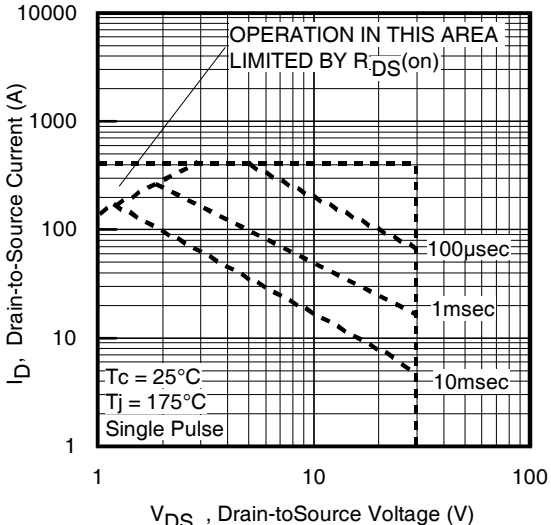

Fig 8. Maximum Safe Operating Area

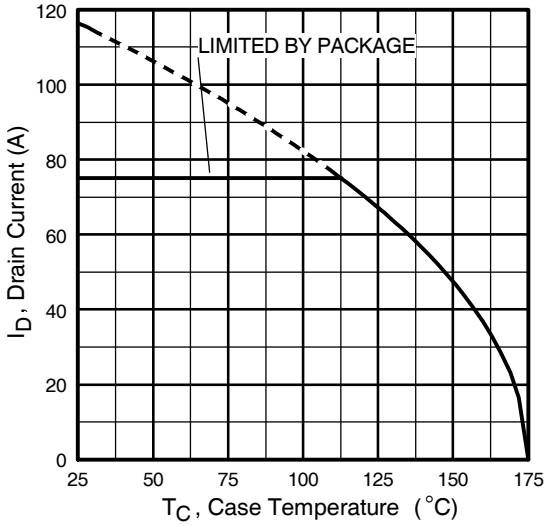

Fig 9. Maximum Drain Current Vs. Case Temperature

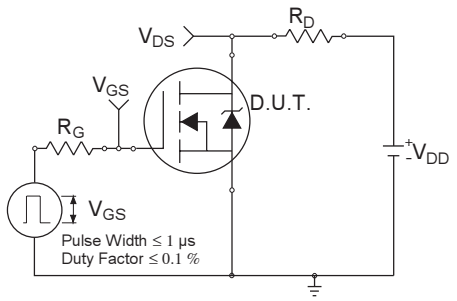

Fig 10a. Switching Time Test Circuit

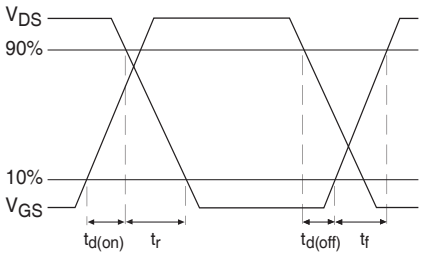

Fig 10b. Switching Time Waveforms

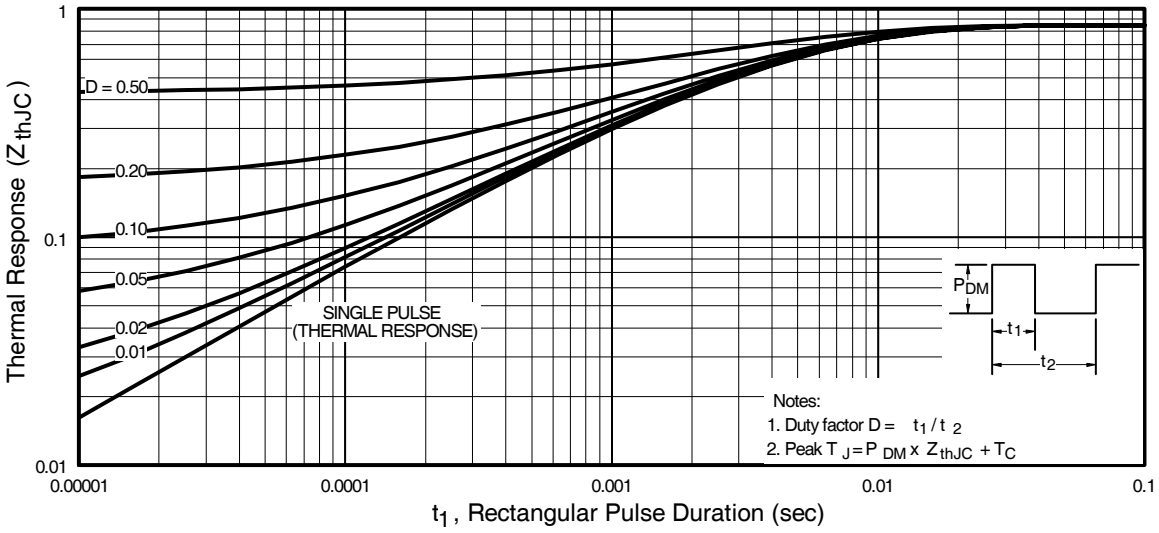

Fig 11. Maximum Effective Transient Thermal Impedance, Junction-to-Case

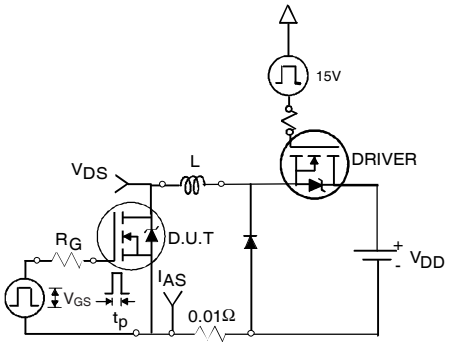

Fig 12a. Unclamped Inductive Test Circuit

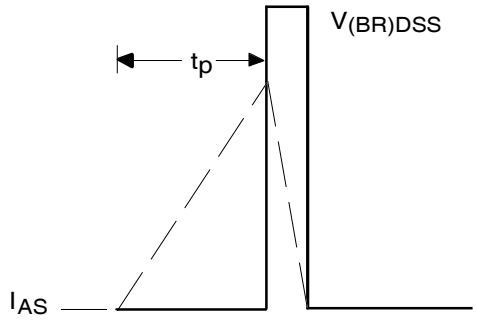

Fig 12b. Unclamped Inductive Waveforms

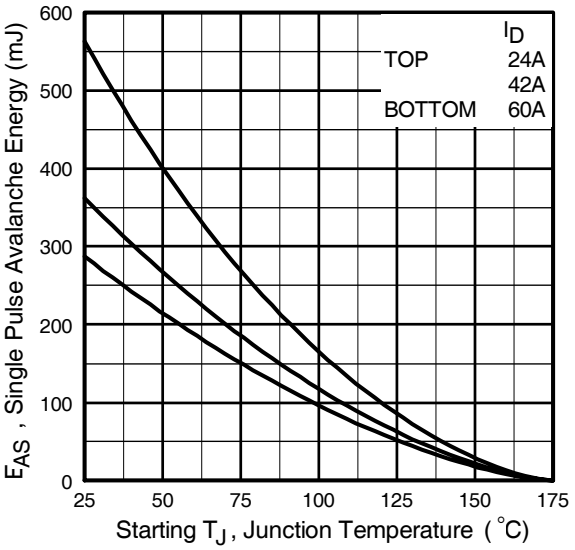

Fig 12c. Maximum Avalanche Energy Vs. Drain Current

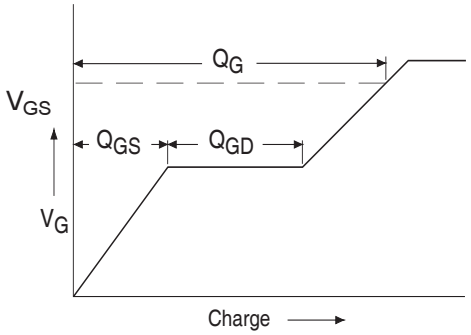

Fig 13a. Basic Gate Charge Waveform

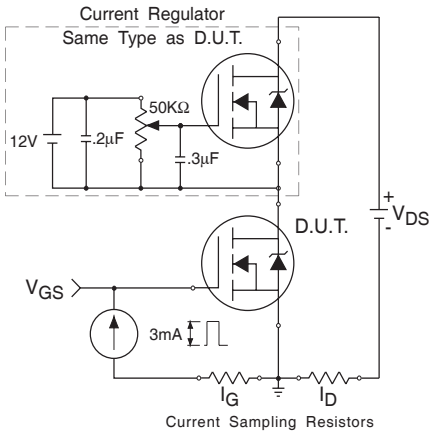

Fig 13b. Gate Charge Test Circuit

Peak Diode Recovery dv/dt Test Circuit

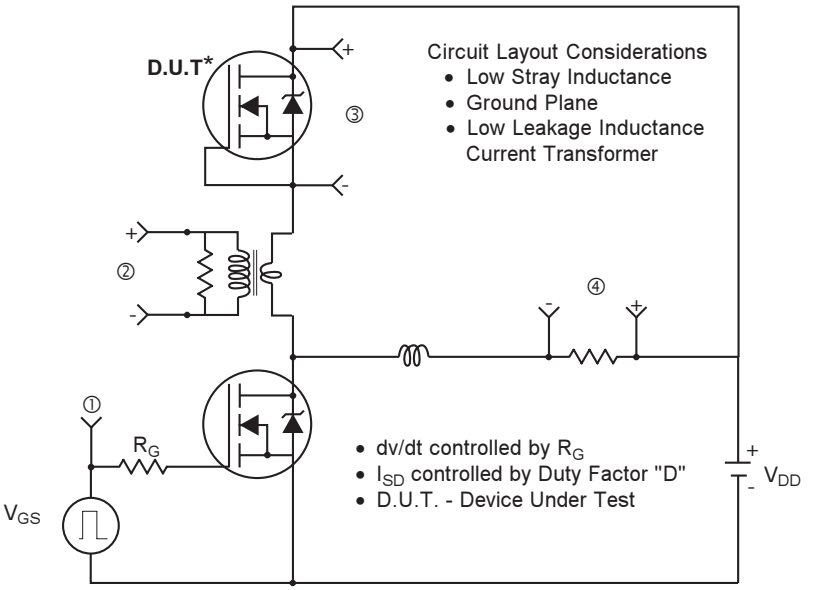

* Reverse Polarity of D.U.T for P-Channel

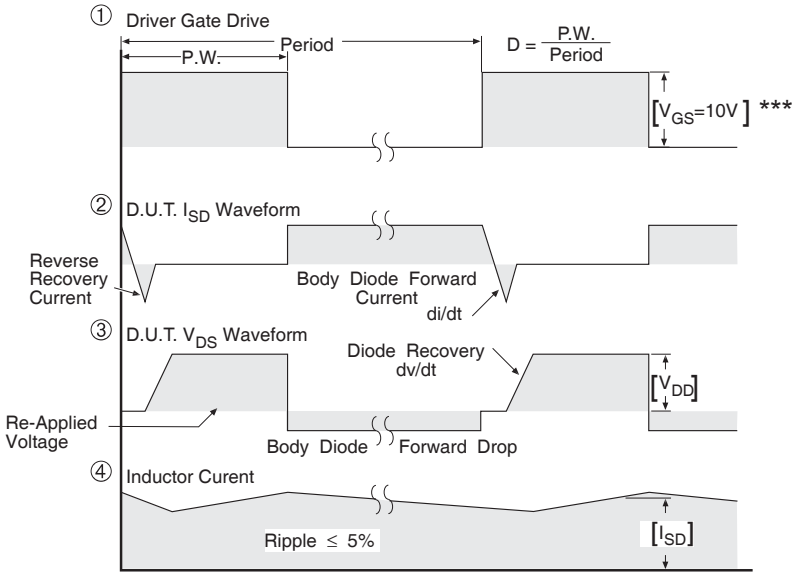

*** V_{GS} = 5.0V for Logic Level and 3V Drive Devices

Fig 14. For N-channel HEXFET® power MOSFETs

TO-220AB Package Outline

Dimensions are shown in millimeters (inches)

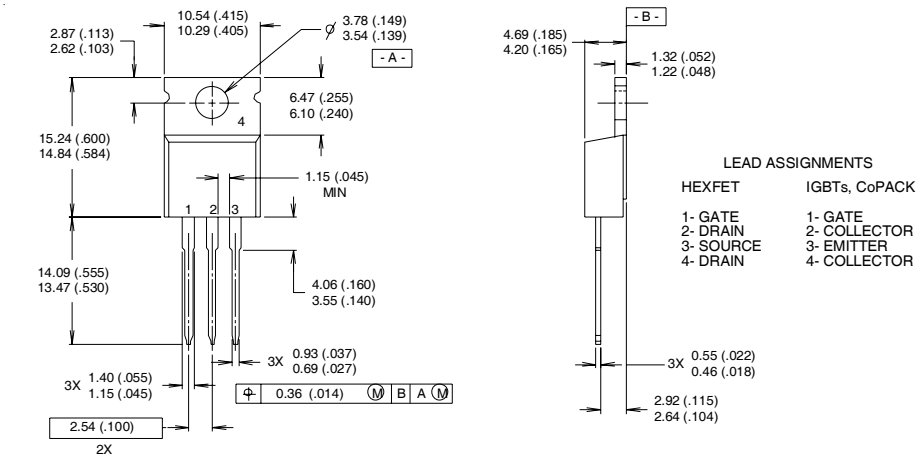

NOTES:

1 DIMENSIONING & TOLERANCING PER ANSI Y14.5M, 1982.
2 CONTROLLING DIMENSION : INCH
3 OUTLINE CONFORMS TO JEDEC OUTLINE TO-220AB.
4 HEATSINK & LEAD MEASUREMENTS DO NOT INCLUDE BURRS.

TO-220AB Part Marking Information

EXAMPLE: THIS IS AN IRF1010
LOT CODE 1789
ASSEMBLED ON WW 19, 1997
IN THE ASSEMBLY LINE "C"

Note: "P" in assembly line position indicates "Lead-Free"

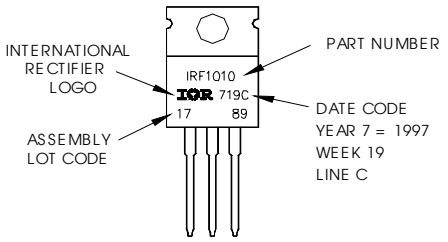

Data and specifications subject to change without notice.
This product has been designed and qualified for the industrial market.
Qualification Standards can be found on IR's Web site.

International
IOR Rectifier

IR WORLD HEADQUARTERS: 233 Kansas St., El Segundo, California 90245, USA Tel: (310) 252-7105
TAC Fax: (310) 252-7903
Visit us at www.irf.com for sales contact information. 01/04

Note: For the most current drawings please refer to the IR website at:
http://www.irf.com/package/

IMPORTANT NOTICE

The information given in this document shall in no event be regarded as a guarantee of conditions or characteristics ("Beschaffenheitsgarantie") .

With respect to any examples, hints or any typical values stated herein and/or any information regarding the application of the product, Infineon Technologies hereby disclaims any and all warranties and liabilities of any kind, including without limitation warranties of non-infringement of intellectual property rights of any third party.

In addition, any information given in this document is subject to customer's compliance with its obligations stated in this document and any applicable legal requirements, norms and standards concerning customer's products and any use of the product of Infineon Technologies in customer's applications.

The data contained in this document is exclusively intended for technically trained staff. It is the responsibility of customer's technical departments to evaluate the suitability of the product for the intended application and the completeness of the product information given in this document with respect to such application.

For further information on the product, technology, delivery terms and conditions and prices please contact your nearest Infineon Technologies office (www.infineon.com).

WARNINGS

Due to technical requirements products may contain dangerous substances. For information on the types in question please contact your nearest Infineon Technologies office.

Except as otherwise explicitly approved by Infineon Technologies in a written document signed by authorized representatives of Infineon Technologies, Infineon Technologies' products may not be used in any applications where a failure of the product or any consequences of the use thereof can reasonably be expected to result in personal injury.