International
IOR Rectifier

AUTOMOTIVE GRADE

AUIRFS8408-7P

HEXFET® Power MOSFET

V_{DSS}	40V
$R_{DS(on)}$ typ.	0.70mΩ
max.	1.0mΩ
$I_{D\ (Silicon\ Limited)}$	397A①
$I_{D\ (Package\ Limited)}$	240A

Features

- Advanced Process Technology
- New Ultra Low On-Resistance
- 175°C Operating Temperature
- Fast Switching
- Repetitive Avalanche Allowed up to Tjmax
- Lead-Free, RoHS Compliant
- Automotive Qualified *

Description

Specifically designed for Automotive applications, this HEXFET® Power MOSFET utilizes the latest processing techniques to achieve extremely low on-resistance per silicon area. Additional features of this design are a 175°C junction operating temperature, fast switching speed and improved repetitive avalanche rating. These features combine to make this product an extremely efficient and reliable device for use in Automotive and wide variety of other applications.

Applications

- Electric Power Steering (EPS)
- Battery Switch
- Start/Stop Micro Hybrid
- Heavy Loads
- SMPS

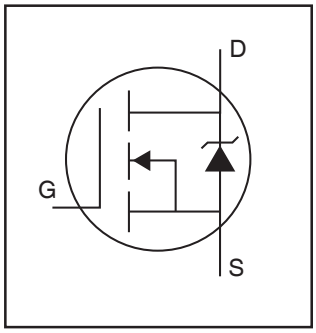

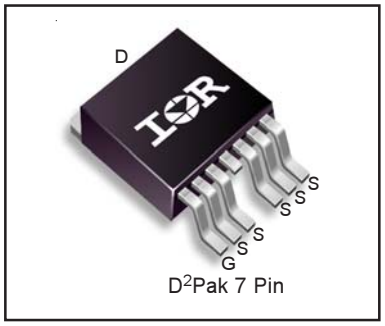

D²Pak 7 Pin

G	D	S
Gate	Drain	Source

Ordering Information

Base part number	Package Type	Standard Pack		Complete Part Number
		Form	Quantity	
AUIRFS8408-7P	D²Pak 7 Pin	Tube	50	AUIRFS8408-7P
		Tape and Reel Left	800	AUIRFS8408-7TRL
		Tape and Reel Right	800	AUIRFS8408-7TRR

Absolute Maximum Ratings

Stresses beyond those listed under "Absolute Maximum Ratings" may cause permanent damage to the device. These are stress ratings only; and functional operation of the device at these or any other condition beyond those indicated in the specifications is not implied. Exposure to absolute-maximum-rated conditions for extended periods may affect device reliability. The thermal resistance and power dissipation ratings are measured under board mounted and still air conditions. Ambient temperature (T_A) is 25°C, unless otherwise specified.

Symbol	Parameter	Max.	Units
I_D @ T_C = 25°C	Continuous Drain Current, V_{GS} @ 10V (Silicon Limited)	397①	A
I_D @ T_C = 100°C	Continuous Drain Current, V_{GS} @ 10V (Silicon Limited)	280①	
I_D @ T_C = 25°C	Continuous Drain Current, V_{GS} @ 10V (Package Limited)	240	
I_{DM}	Pulsed Drain Current ②	1300⑩	
P_D @T_C = 25°C	Maximum Power Dissipation	294	W
	Linear Derating Factor	1.96	W/°C
V_{GS}	Gate-to-Source Voltage	± 20	V
T_J	Operating Junction and	-55 to + 175	°C
T_{STG}	Storage Temperature Range		
	Soldering Temperature, for 10 seconds (1.6mm from case)	300	

Avalanche Characteristics

$E_{AS\ (Thermally\ limited)}$	Single Pulse Avalanche Energy ③	501	mJ
$E_{AS\ (tested)}$	Single Pulse Avalanche Energy Tested Value ③	809	
I_{AR}	Avalanche Current ②	See Fig. 14, 15, 24a, 24b	A
E_{AR}	Repetitive Avalanche Energy ②		mJ

Thermal Resistance

Symbol	Parameter	Typ.	Max.	Units
R_{qJC}	Junction-to-Case ⑨	—	0.51	°C/W
R_{qJA}	Junction-to-Ambient (PCB Mount) ⑧	—	40	

HEXFET® is a registered trademark of International Rectifier.

*Qualification standards can be found at http://www.irf.com/

 © 2013 International Rectifier

Static @ T_J = 25°C (unless otherwise specified)

Symbol	Parameter	Min.	Typ.	Max.	Units	Conditions
$V_{(BR)DSS}$	Drain-to-Source Breakdown Voltage	40	—	—	V	V_{GS} = 0V, I_D = 250µA
$\Delta V_{(BR)DSS}/\Delta T_J$	Breakdown Voltage Temp. Coefficient	—	0.030	—	V/°C	Reference to 25°C, I_D = 5mA②
$R_{DS(on)}$	Static Drain-to-Source On-Resistance	—	0.7	1.0	mΩ	V_{GS} = 10V, I_D = 100A ⑤
$V_{GS(th)}$	Gate Threshold Voltage	2.2	3.0	3.9	V	V_{DS} = V_{GS}, I_D = 250µA
I_{DSS}	Drain-to-Source Leakage Current	—	—	1.0	µA	V_{DS} = 40V, V_{GS} = 0V
		—	—	150		V_{DS} = 40V, V_{GS} = 0V, T_J = 125°C
I_{GSS}	Gate-to-Source Forward Leakage	—	—	100	nA	V_{GS} = 20V
	Gate-to-Source Reverse Leakage	—	—	-100		V_{GS} = -20V
R_G	Internal Gate Resistance	—	2.0	—	Ω	

Dynamic @ T_J = 25°C (unless otherwise specified)

Symbol	Parameter	Min.	Typ.	Max.	Units	Conditions
gfs	Forward Transconductance	156	—	—	S	V_{DS} = 10V, I_D = 100A
Q_g	Total Gate Charge	—	210	315	nC	I_D = 100A
Q_{gs}	Gate-to-Source Charge	—	55	—		V_{DS} =20V
Q_{gd}	Gate-to-Drain ("Miller") Charge	—	66	—		V_{GS} = 10V ⑤
Q_{sync}	Total Gate Charge Sync. (Q_g - Q_{gd})	—	144	—		I_D = 100A, V_{DS} =0V, V_{GS} = 10V
$t_{d(on)}$	Turn-On Delay Time	—	23	—	ns	V_{DD} = 26V
t_r	Rise Time	—	125	—		I_D = 100A
$t_{d(off)}$	Turn-Off Delay Time	—	107	—		R_G = 2.6Ω
t_f	Fall Time	—	85	—		V_{GS} = 10V ⑤
C_{iss}	Input Capacitance	—	10250	—	pF	V_{GS} = 0V
C_{oss}	Output Capacitance	—	1540	—		V_{DS} = 25V
C_{rss}	Reverse Transfer Capacitance	—	1060	—		f = 1.0 MHz, See Fig. 5
C_{oss} eff. (ER)	Effective Output Capacitance (Energy Related)	—	1880	—		V_{GS} = 0V,V_{DS} = 0V to 32V⑦,See Fig.11
C_{oss} eff. (TR)	Effective Output Capacitance (Time Related)	—	2147	—		V_{GS} = 0V, V_{DS} = 0V to 32V ⑥

Diode Characteristics

Symbol	Parameter	Min.	Typ.	Max.	Units	Conditions
I_S	Continuous Source Current (Body Diode)	—	—	397①	A	MOSFET symbol showing the integral reverse p-n junction diode. 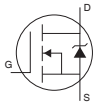
I_{SM}	Pulsed Source Current (Body Diode) ②	—	—	1300⑩		
V_{SD}	Diode Forward Voltage	—	0.9	1.3	V	T_J = 25°C, I_S = 100A, V_{GS} = 0V ⑤
dv/dt	Peak Diode Recovery ④	—	2.7	—	V/ns	T_J = 175°C, I_S = 100A, V_{DS} = 40V
t_{rr}	Reverse Recovery Time	—	44	—	ns	T_J = 25°C V_R = 34V,
		—	46	—		T_J = 125°C I_F = 100A
Q_{rr}	Reverse Recovery Charge	—	43	—	nC	T_J = 25°C di/dt = 100A/µs ⑤
		—	44	—		T_J = 125°C
I_{RRM}	Reverse Recovery Current	—	1.9	—	A	T_J = 25°C

Notes:

① Calculated continuous current based on maximum allowable junction temperature. Bond wire current limit is 240A by source bonding technology. Note that current limitations arising from heating of the device leads may occur with some lead mounting arrangements.(Refer to AN-1140)

② Repetitive rating; pulse width limited by max. junction temperature.

③ Limited by T_{Jmax}, starting T_J = 25°C, L = 0.100mH, R_G = 50Ω, I_{AS} = 100A, V_{GS} =10V. Part not recommended for use above this value.

④ I_{SD} ≤ 100A, di/dt ≤ 1337A/µs, V_{DD} ≤ $V_{(BR)DSS}$, T_J ≤ 175°C.

⑤ Pulse width ≤ 400µs; duty cycle ≤ 2%.

⑥ C_{oss} eff. (TR) is a fixed capacitance that gives the same charging time as C_{oss} while V_{DS} is rising from 0 to 80% V_{DSS}.

⑦ C_{oss} eff. (ER) is a fixed capacitance that gives the same energy as C_{oss} while V_{DS} is rising from 0 to 80% V_{DSS}.

⑧ When mounted on 1" square PCB (FR-4 or G-10 Material). For recommended footprint and soldering techniques refer to application note #AN-994.

⑨ R_θ is measured at T_J approximately 90°C.

⑩ Pulse drain current is limited by source bonding technology.

 © 2013 International Rectifier

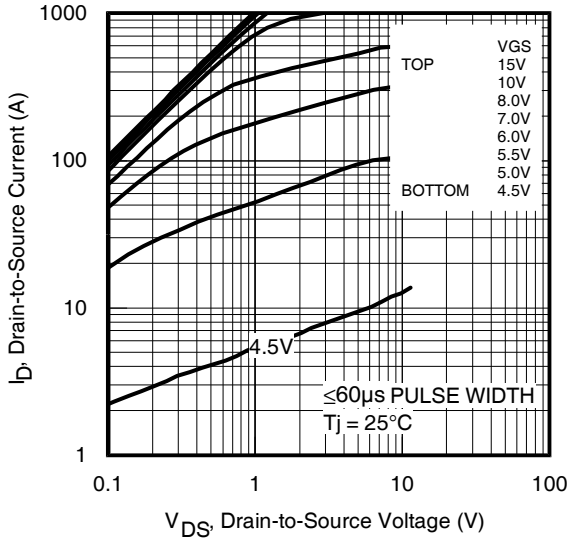

Fig 1. Typical Output Characteristics

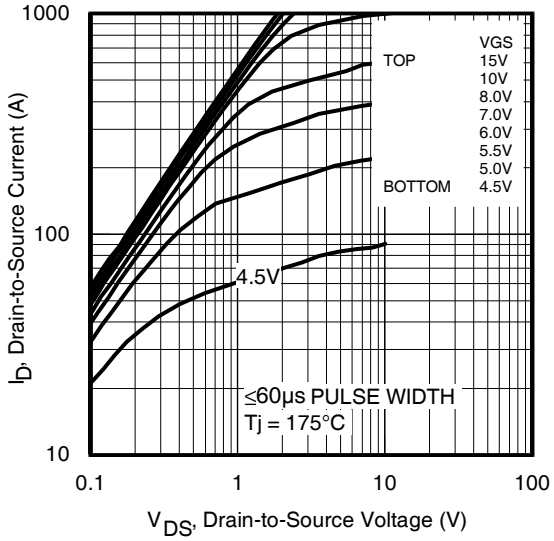

Fig 2. Typical Output Characteristics

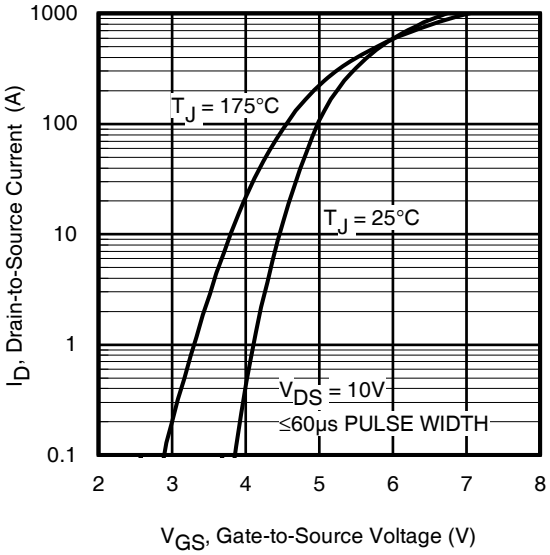

Fig 3. Typical Transfer Characteristics

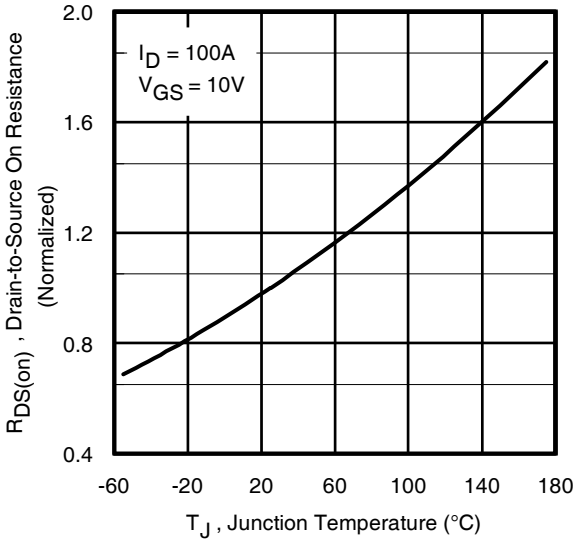

Fig 4. Normalized On-Resistance vs. Temperature

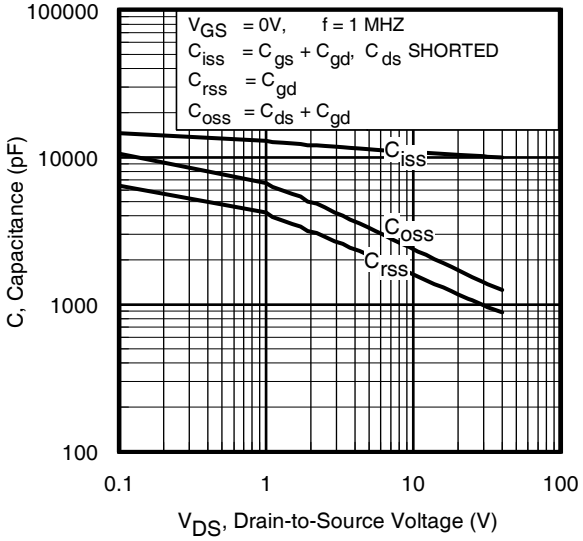

Fig 5. Typical Capacitance vs. Drain-to-Source Voltage

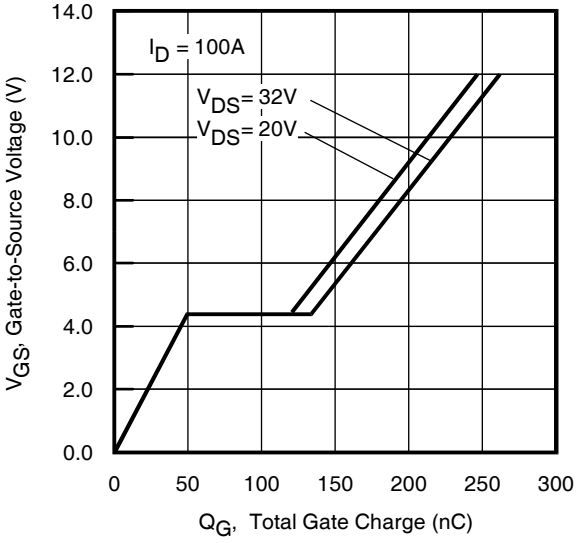

Fig 6. Typical Gate Charge vs. Gate-to-Source Voltage

 © 2013 International Rectifier

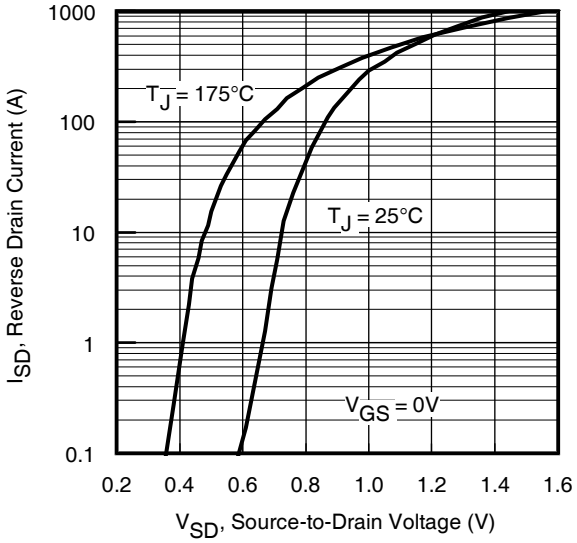

Fig 7. Typical Source-Drain Diode Forward Voltage

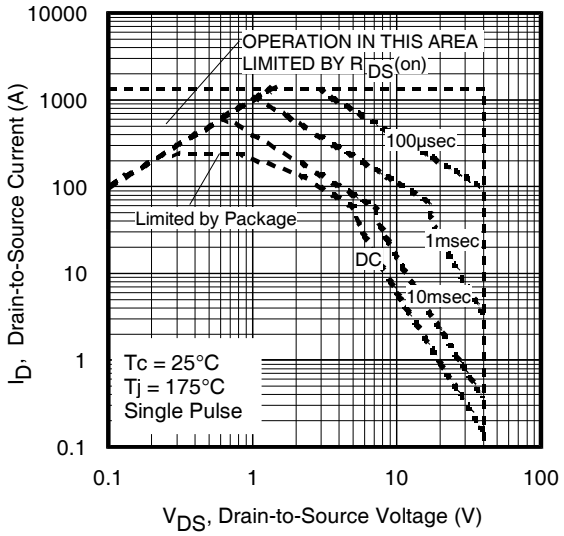

Fig 8. Maximum Safe Operating Area

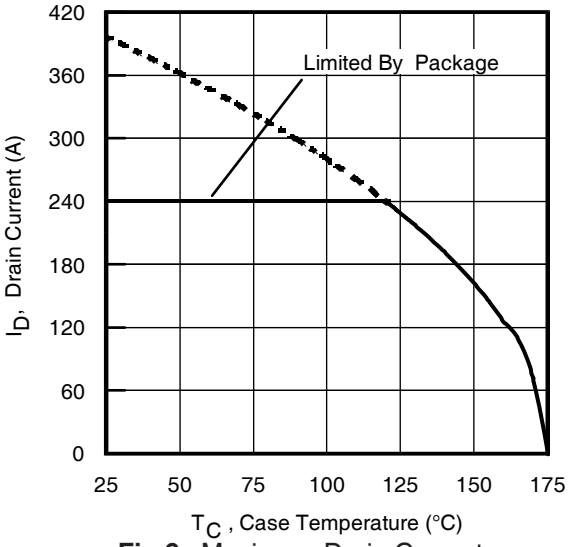

Fig 9. Maximum Drain Current vs. Case Temperature

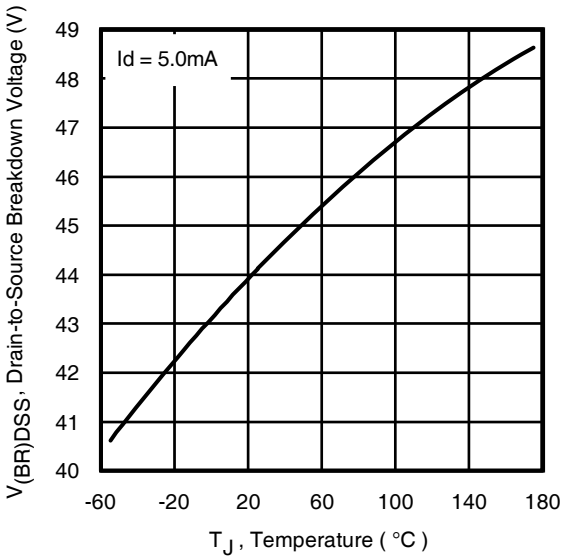

Fig 10. Drain-to-Source Breakdown Voltage

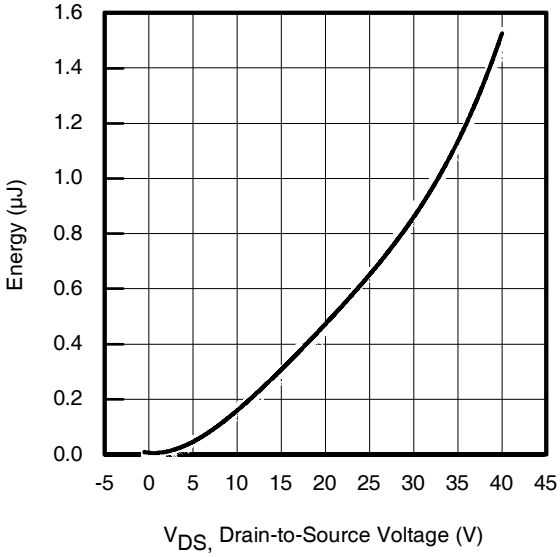

Fig 11. Typical C_{OSS} Stored Energy

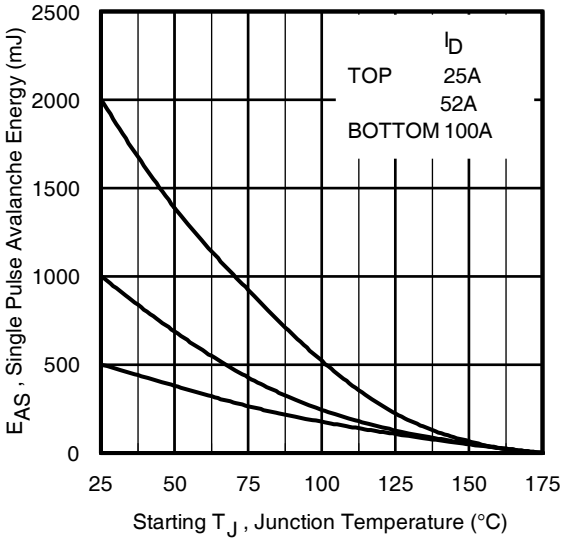

Fig 12. Maximum Avalanche Energy vs. DrainCurrent

 © 2013 International Rectifier

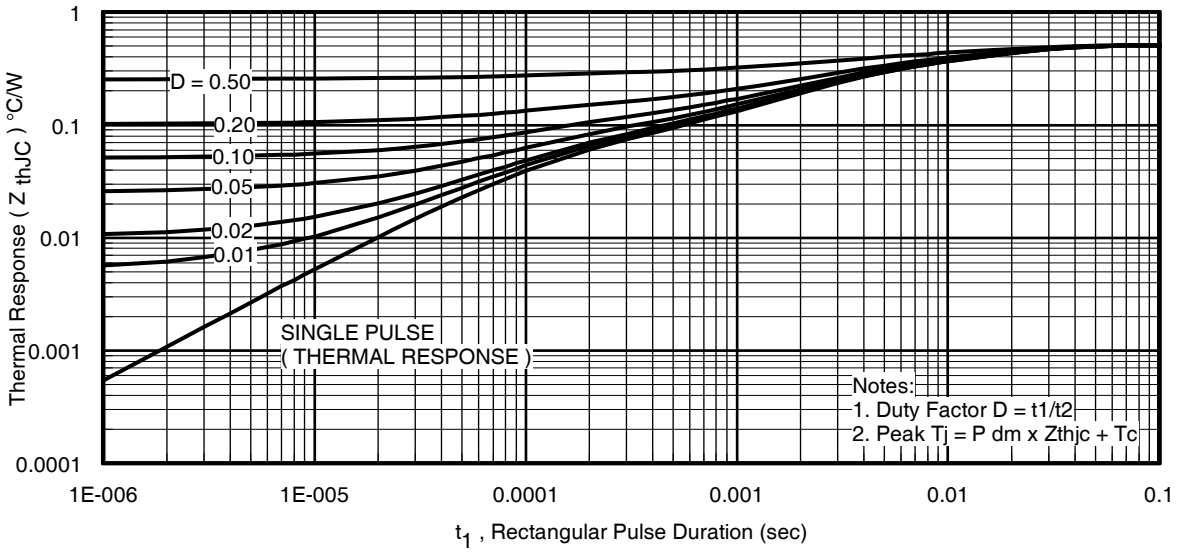

Fig 13. Maximum Effective Transient Thermal Impedance, Junction-to-Case

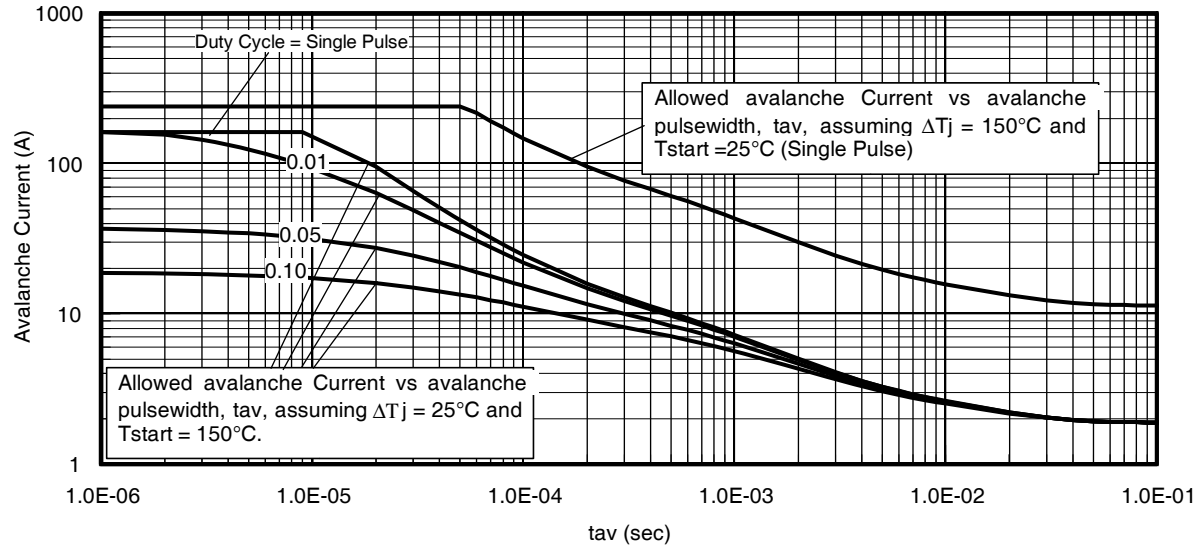

Fig 14. Typical Avalanche Current vs.Pulsewidth

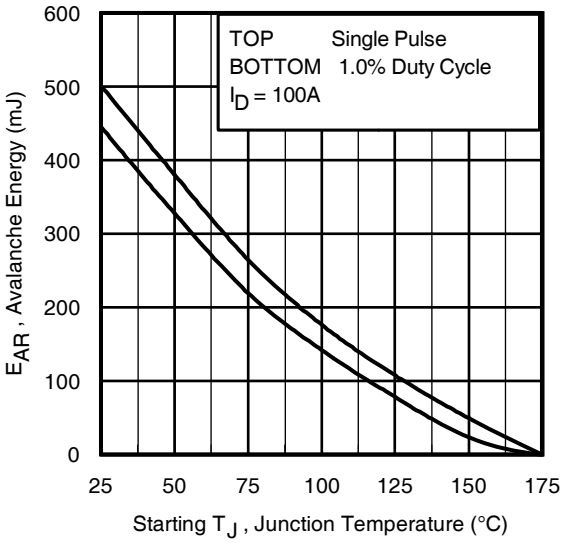

Fig 15. Maximum Avalanche Energy vs. Temperature

Notes on Repetitive Avalanche Curves , Figures 14, 15
(For further info, see AN-1005 at www.irf.com)

1. Avalanche failures assumption:
   Purely a thermal phenomenon and failure occurs at a temperature far in excess of T_{jmax}. This is validated for every part type.
2. Safe operation in Avalanche is allowed as long asT_{jmax} is not exceeded.
3. Equation below based on circuit and waveforms shown in Figures 24a, 24b.
4. $P_{D\ (ave)}$ = Average power dissipation per single avalanche pulse.
5. BV = Rated breakdown voltage (1.3 factor accounts for voltage increase during avalanche).
6. I_{av} = Allowable avalanche current.
7. ΔT = Allowable rise in junction temperature, not to exceed T_{jmax} (assumed as 25°C in Figure 14, 15).
   t_{av} = Average time in avalanche.
   D = Duty cycle in avalanche = $t_{av} \cdot f$
   $Z_{thJC}(D, t_{av})$ = Transient thermal resistance, see Figures 13)

$$P_{D\ (ave)} = 1/2\ (1.3 \cdot BV \cdot I_{av}) = \Delta T / Z_{thJC}$$
$$I_{av} = 2\Delta T / [1.3 \cdot BV \cdot Z_{th}]$$
$$E_{AS\ (AR)} = P_{D\ (ave)} \cdot t_{av}$$

 © 2013 International Rectifier

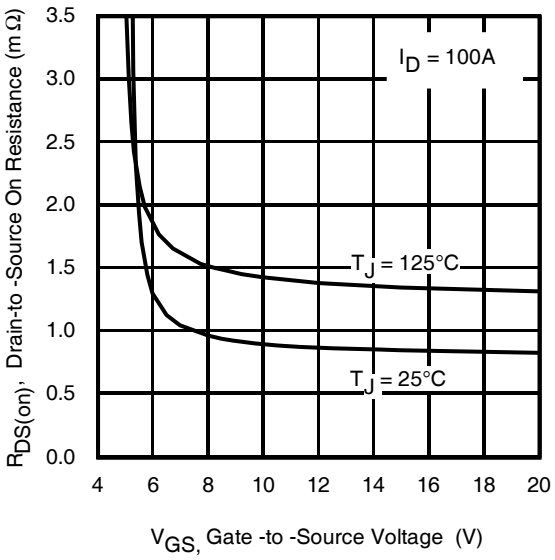

Fig 16. On-Resistance vs. Gate Voltage

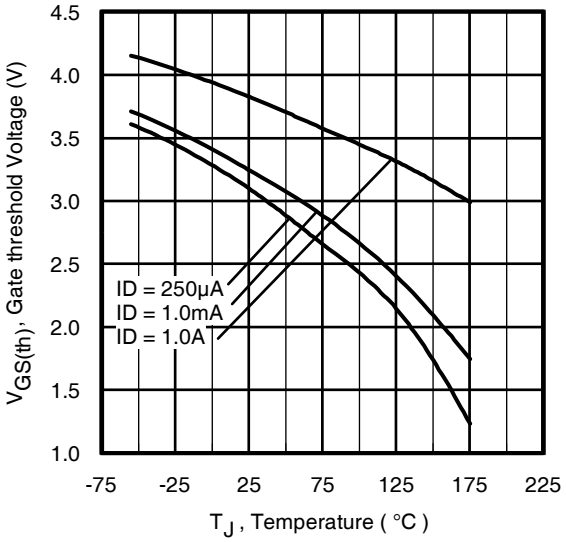

Fig 17. Threshold Voltage vs. Temperature

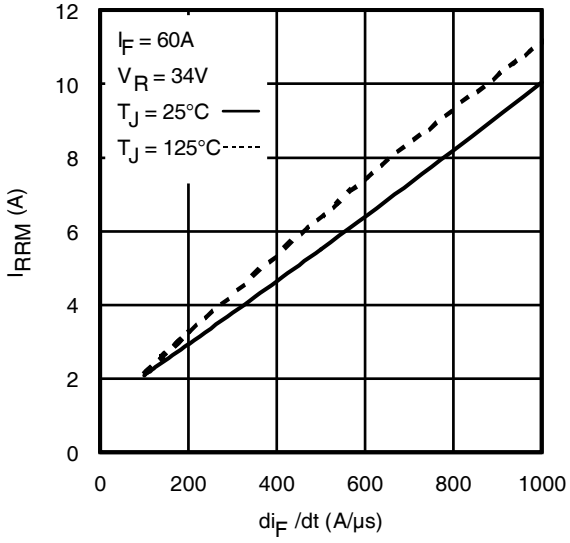

Fig. 18 - Typical Recovery Current vs. di_f/dt

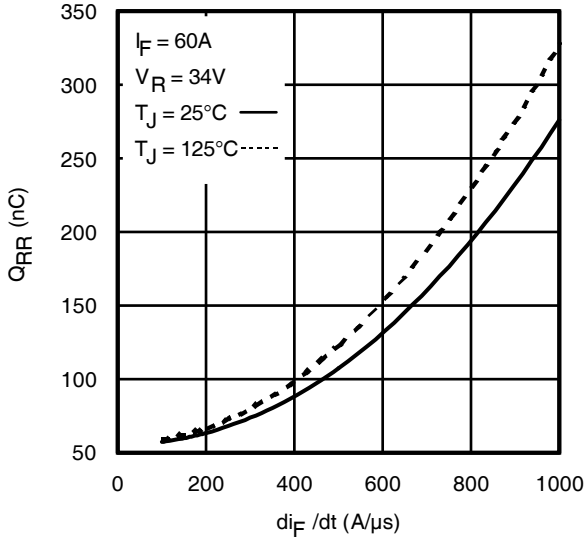

Fig. 19 - Typical Stored Charge vs. di_f/dt

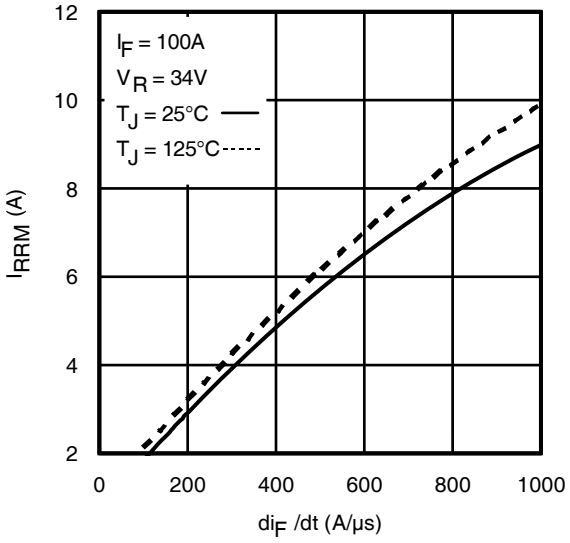

Fig. 20 - Typical Recovery Current vs. di_f/dt

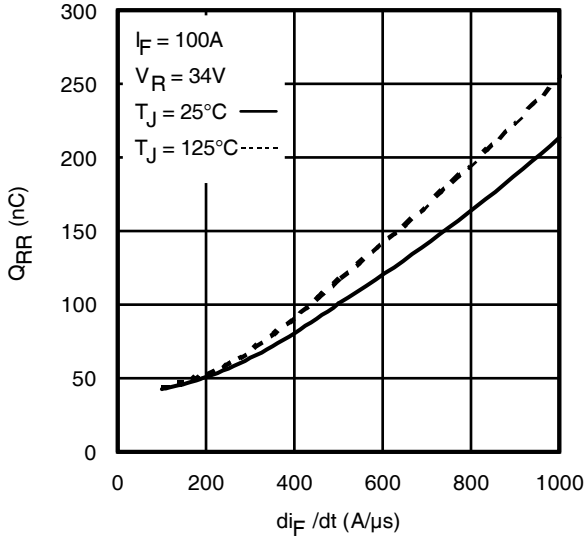

Fig. 21 - Typical Stored Charge vs. di_f/dt

 © 2013 International Rectifier

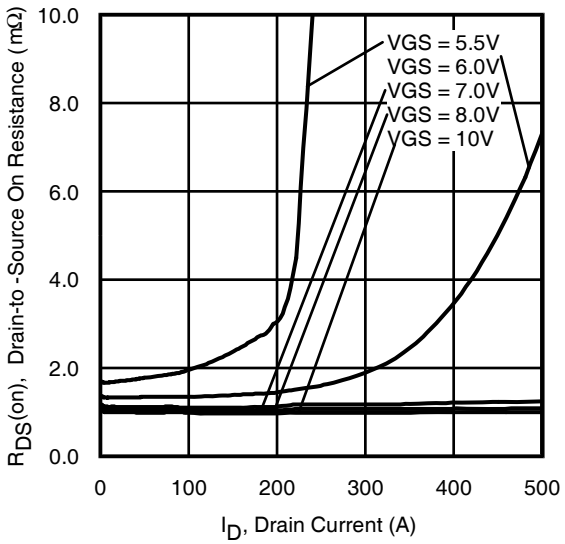

Fig 22. Typical On-Resistance vs. Drain Current

 © 2013 International Rectifier

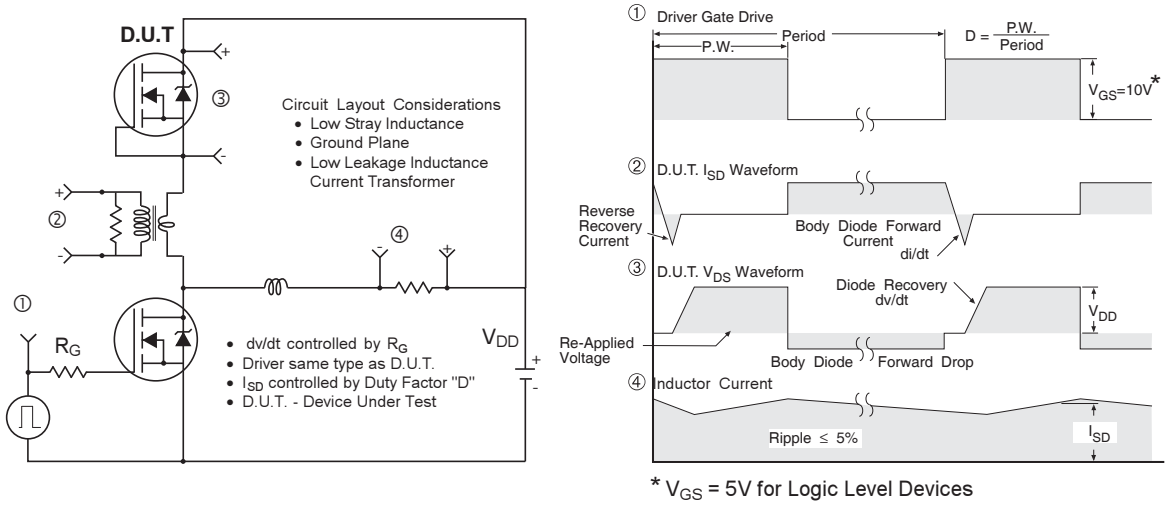

Fig 23. Peak Diode Recovery dv/dt Test Circuit for N-Channel HEXFET® Power MOSFETs

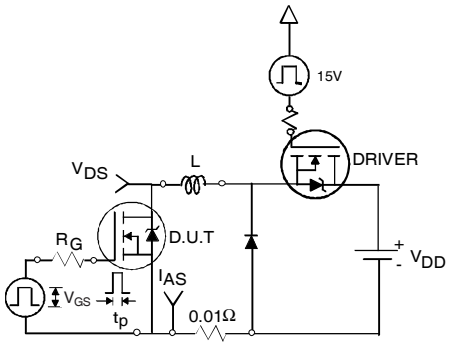

Fig 24a. Unclamped Inductive Test Circuit

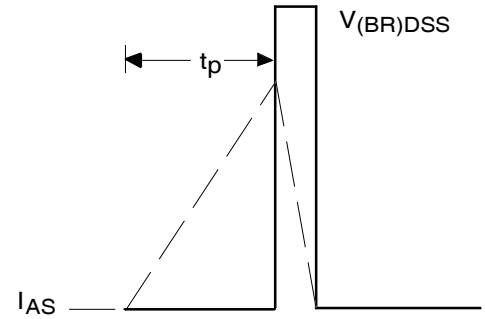

Fig 24b. Unclamped Inductive Waveforms

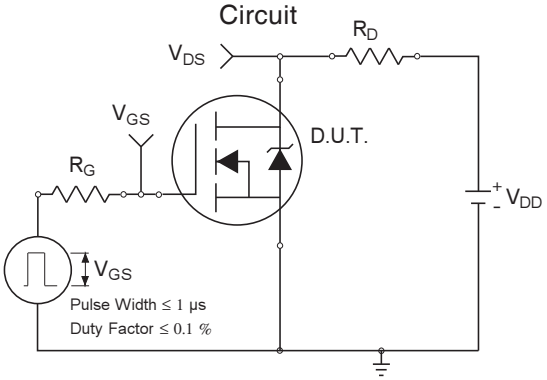

Fig 25a. Switching Time Test Circuit

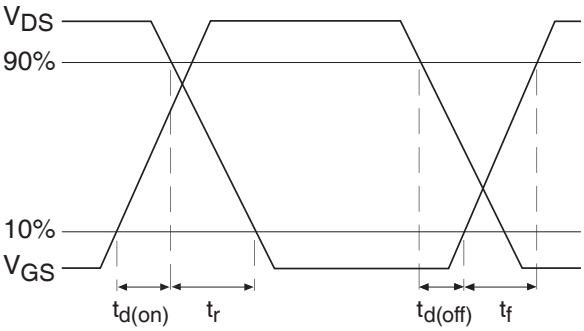

Fig 25b. Switching Time Waveforms

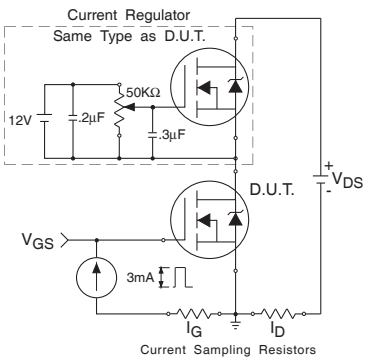

Fig 26a. Gate Charge Test Circuit

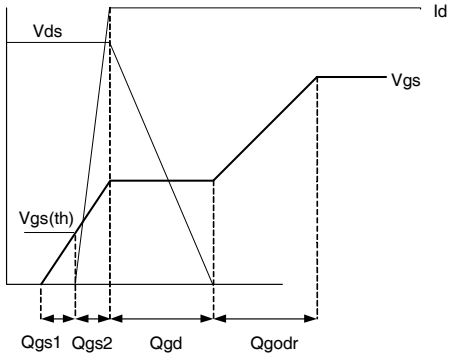

Fig 26b. Gate Charge Waveform

 © 2013 International Rectifier

D²Pak - 7 Pin Package Outline

Dimensions are shown in millimeters (inches)

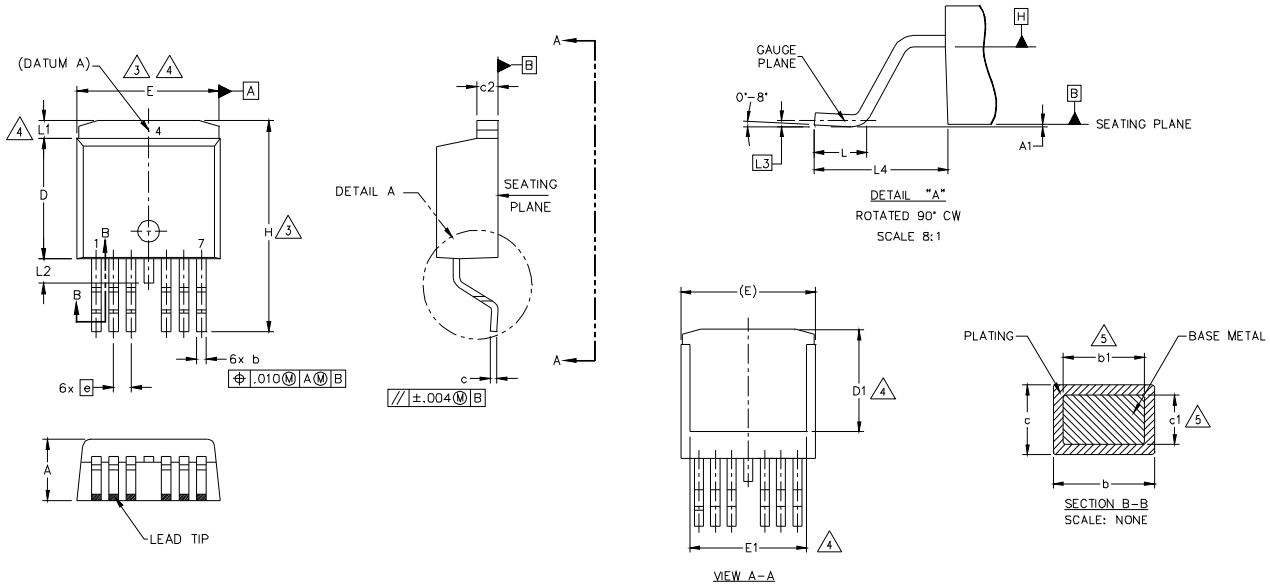

SYMBOL	DIMENSIONS				NOTES
	MILLIMETERS		INCHES		
	MIN.	MAX.	MIN.	MAX.	
A	4.06	4.83	.160	.190	
A1	–	0.254	–	.010	
b	0.51	0.99	.020	.036	
b1	0.51	0.89	.020	.032	5
c	0.38	0.74	.015	.029	
c1	0.38	0.58	.015	.023	5
c2	1.14	1.65	.045	.065	
D	8.38	9.65	.330	.380	3
D1	6.86	–	.270		4
E	9.65	10.67	.380	.420	3,4
E1	6.22	–	.245		4
e	1.27 BSC		.050 BSC		
H	14.61	15.88	.575	.625	
L	1.78	2.79	.070	.110	
L1	–	1.68	–	.066	4
L2	–	1.78	–	.070	
L3	0.25 BSC		.010 BSC		
L4	4.78	5.28	.188	.208	

NOTES:

1. DIMENSIONING AND TOLERANCING AS PER ASME Y14.5M–1994
2. DIMENSIONS ARE SHOWN IN MILLIMETERS [INCHES].
3. DIMENSION D & E DO NOT INCLUDE MOLD FLASH. MOLD FLASH SHALL NOT EXCEED 0.127 [.005"] PER SIDE. THESE DIMENSIONS ARE MEASURED AT THE OUTMOST EXTREMES OF THE PLASTIC BODY AT DATUM H.
4. THERMAL PAD CONTOUR OPTIONAL WITHIN DIMENSION E, L1, D1 & E1.
5. DIMENSION b1 AND c1 APPLY TO BASE METAL ONLY.
6. DATUM A & B TO BE DETERMINED AT DATUM PLANE H.
7. CONTROLLING DIMENSION: INCH.
8. OUTLINE CONFORMS TO JEDEC OUTLINE TO-263CB.

Note: For the most current drawing please refer to IR website at http://www.irf.com/package/

 © 2013 International Rectifier

D²Pak - 7 Pin Part Marking Information

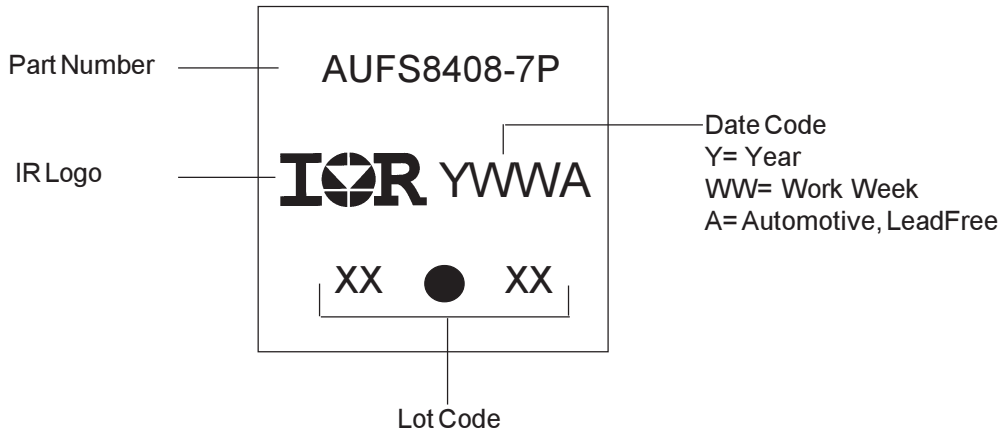

D²Pak - 7 Pin Tape and Reel

NOTES, TAPE & REEL, LABELLING:

1. TAPE AND REEL.
   - 1.1 REEL SIZE 13 INCH DIAMETER.
   - 1.2 EACH REEL CONTAINING 800 DEVICES.
   - 1.3 THERE SHALL BE A MINIMUM OF 42 SEALED POCKETS CONTAINED IN THE LEADER AND A MINIMUM OF 15 SEALED POCKETS IN THE TRAILER.
   - 1.4 PEEL STRENGTH MUST CONFORM TO THE SPEC. NO. 71-9667.
   - 1.5 PART ORIENTATION SHALL BE AS SHOWN BELOW.
   - 1.6 REEL MAY CONTAIN A MAXIMUM OF TWO UNIQUE LOT CODE/DATE CODE COMBINATIONS. REWORKED REELS MAY CONTAIN A MAXIMUM OF THREE UNIQUE LOT CODE/DATE CODE COMBINATIONS. HOWEVER, THE LOT CODES AND DATE CODES WITH THEIR RESPECTIVE QUANTITIES SHALL APPEAR ON THE BAR CODE LABEL FOR THE AFFECTED REEL.

2. LABELLING (REEL AND SHIPPING BAG).
   - 2.1 CUST. PART NUMBER (BAR CODE): IRFXXXXSTRL-7P
   - 2.2 CUST. PART NUMBER (TEXT CODE): IRFXXXXSTRL-7P
   - 2.3 I.R. PART NUMBER: IRFXXXXSTRL-7P
   - 2.4 QUANTITY:
   - 2.5 VENDOR CODE: IR
   - 2.6 LOT CODE:
   - 2.7 DATE CODE:

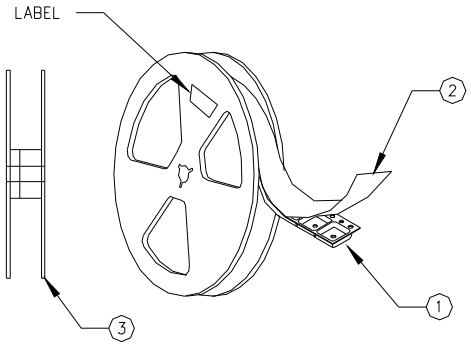

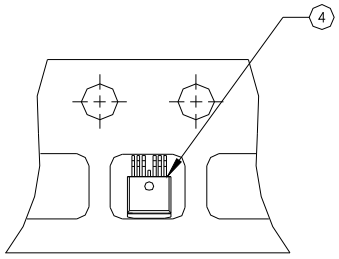

Note: For the most current drawing please refer to IR website at: http://www.irf.com/package/

 © 2013 International Rectifier

Qualification Information†

Qualification Level		Automotive (per AEC-Q101)	
		Comments: This part number(s) passed Automotive qualification. IR's Industrial and Consumer qualification level is granted by extension of the higher Automotive level.	
		D^2PAK - 7 Pin	MSL1
ESD	Machine Model	Class M4 (+/- 600V)†† AEC-Q101-002	
	Human Body Model	Class H3A (+/- 6000V)†† AEC-Q101-001	
	Charged Device Model	Class C5 (+/- 2000V)†† AEC-Q101-005	
RoHS Compliant		Yes	

† Qualification standards can be found at International Rectifier's web site: http//www.irf.com/

†† Highest passing voltage.

 © 2013 International Rectifier

IMPORTANT NOTICE

Unless specifically designated for the automotive market, International Rectifier Corporation and its subsidiaries (IR) reserve the right to make corrections, modifications, enhancements, improvements, and other changes to its products and services at any time and to discontinue any product or services without notice. Part numbers designated with the "AU" prefix follow automotive industry and / or customer specific requirements with regards to product discontinuance and process change notification. All products are sold subject to IR's terms and conditions of sale supplied at the time of order acknowledgment.

IR warrants performance of its hardware products to the specifications applicable at the time of sale in accordance with IR's standard warranty. Testing and other quality control techniques are used to the extent IR deems necessary to support this warranty. Except where mandated by government requirements, testing of all parameters of each product is not necessarily performed.

IR assumes no liability for applications assistance or customer product design. Customers are responsible for their products and applications using IR components. To minimize the risks with customer products and applications, customers should provide adequate design and operating safeguards.

Reproduction of IR information in IR data books or data sheets is permissible only if reproduction is without alteration and is accompanied by all associated warranties, conditions, limitations, and notices. Reproduction of this information with alterations is an unfair and deceptive business practice. IR is not responsible or liable for such altered documentation. Information of third parties may be subject to additional restrictions.

Resale of IR products or serviced with statements different from or beyond the parameters stated by IR for that product or service voids all express and any implied warranties for the associated IR product or service and is an unfair and deceptive business practice. IR is not responsible or liable for any such statements.

IR products are not designed, intended, or authorized for use as components in systems intended for surgical implant into the body, or in other applications intended to support or sustain life, or in any other application in which the failure of the IR product could create a situation where personal injury or death may occur. Should Buyer purchase or use IR products for any such unintended or unauthorized application, Buyer shall indemnify and hold International Rectifier and its officers, employees, subsidiaries, affiliates, and distributors harmless against all claims, costs, damages, and expenses, and reasonable attorney fees arising out of, directly or indirectly, any claim of personal injury or death associated with such unintended or unauthorized use, even if such claim alleges that IR was negligent regarding the design or manufacture of the product.

Only products certified as military grade by the Defense Logistics Agency (DLA) of the US Department of Defense, are designed and manufactured to meet DLA military specifications required by certain military, aerospace or other applications. Buyers acknowledge and agree that any use of IR products not certified by DLA as military-grade, in applications requiring military grade products, is solely at the Buyer's own risk and that they are solely responsible for compliance with all legal and regulatory requirements in connection with such use.

IR products are neither designed nor intended for use in automotive applications or environments unless the specific IR products are designated by IR as compliant with ISO/TS 16949 requirements and bear a part number including the designation "AU". Buyers acknowledge and agree that, if they use any non-designated products in automotive applications, IR will not be responsible for any failure to meet such requirements.

For technical support, please contact IR's Technical Assistance Center

http://www.irf.com/technical-info/

WORLD HEADQUARTERS:

101 N. Sepulveda Blvd., El Segundo, California 90245

Tel: (310) 252-7105

 © 2013 International Rectifier