K21KAC-P03LPH0-700S

ODU MINI-SNAP® Series K

Straight in-line receptacle with break-away and push-pull locking for bend relief

Size: 1, IP68, Keying: A, Number of contacts: 3, Solder cup, Contact type: Sockets, Signal



Basic information

Part number	K21KAC-P03LPH0-700S
Category	Connector
Type of connector	In-line receptacle
Assembly situation	Straight
Size	1

Contact insert description

Transmission type	Signal
Number of contacts	3
Contact type	Sockets
Contact diameter	1.3 mm
Termination type	Solder cup
Termination diameter	1.1 mm
Wire cross section AWG	AWG 20

Reverse gender on request

Technical information

Nominal current single contact	12 A	IEC 60512-5-2:2002 (DIN EN 60512-5-2:2003)
Max. current insert	12	VDE 0298-4:2003
Test voltage	1.5 kV AC	SAE AS 13441:1998 method 3001.1
Max. creepage distance (contact to contact)	0.9 mm (Contact to housing)	
Max. creepage distance (contact to housing)	0.7 mm (Contact to housing)	
Max. clearance distance (contact to contact)	0.9 mm (Contact to contact)	
Max. clearance distance (contact to housing)	0.7 mm (Contact to housing)	

All shown connectors are rated to a safety extra low voltage (SELV) of less than 50 V AC / 75 V DC, according to IEC 61140:2016 (VDE 0140-1:2016) Protection against electric shock - Common aspects for installation and equipment. In case other standards rule a specific use of the connector, the application specific safety criteria shall be considered first. In this context, lower voltage ratings may be valid. Warning: Danger to life for operating voltages above 50 V AC / 120 V DC!

Cable description

Cable outlet	Cable bend relief
Min. cable diameter	6.5
Max. cable diameter	7

Mechanical and environmental data

Locking principle	Break-Away , Push-Pull
Keying	A
Mating cycles	5000
IP class	IP68
Max. operating temperature	120 °C
Min. operating temperature	-40 °C

*IP protection class refers to mated condition

Material and surface treatments

Material	Cu-alloy with matt chrome finish
Insulator material	PEEK
Contact material	Cu-alloy with gold finish

ODU reserves the right to make changes based on the current state of knowledge without prior notice without being obliged to provide replacement deliveries or refinements of older designs.
All shown connectors are defined without breaking capacity (COC) according to IEC 61984:2008 (VDE 0627:2009).

Graphics and technical drawings

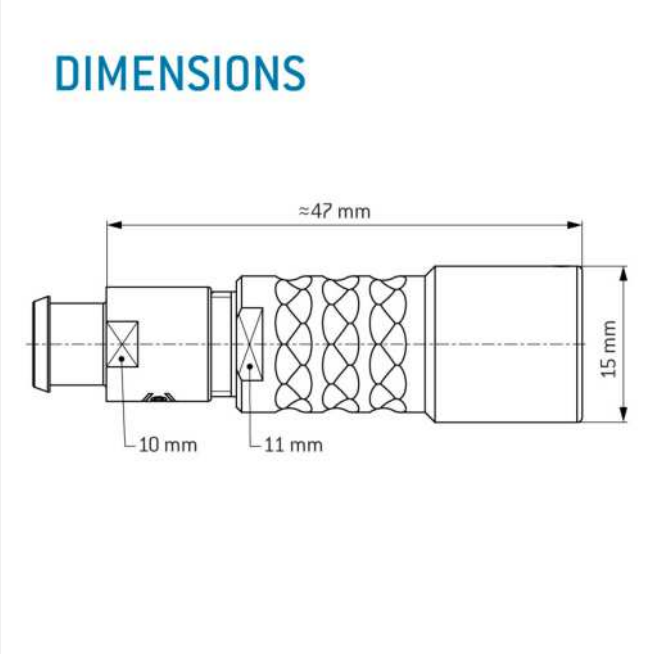

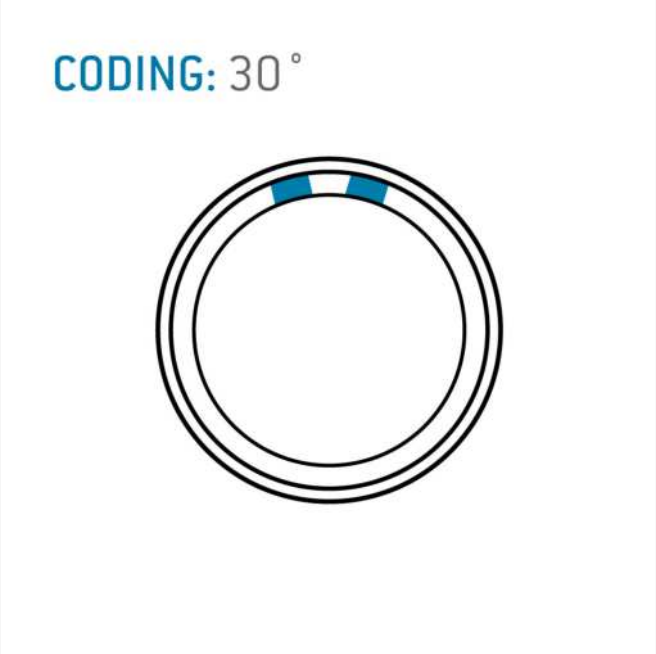



Further technical information and downloads

3D-File (STP File)

Technical specifications