12-Channel RGB LED Drivers with I²C Control

Features

- Drives up to 12 LEDs (4 RGBs)
- Multiplexed LED Current Driver Outputs
  - Only 4 PCB Traces to the LEDs
  - 20.8kHz MUX Frequency Prevents Audio Noise
- 14 Million Colors
  - LED Current: 125µA to 24mA in 125µA Steps
  - Night-Mode: 8µA to 1.5mA in 8µA Steps
  - 5% Max. Current Accuracy & Matching
- 12 Independent Exponential Fade-Engines
  - Ultra-Smooth 3072-Step (8µA) Fade Resolution
  - 3-bit Programmable Fade-Rate
- Flexible Pattern Generator with Watchdog Counter
- Optional AutoBreathe™ Mode (KTD2052B/D)
- Patented[1] BrightExtend™ Technology
  - Maintains Color-Accuracy and PSRR for Battery-Powered Applications with Low Vin
- Proprietary CoolExtend™ Technology
  - 2-bit Programmable Maximum Die-Temp
- 0.6µA Automatic Shutdown (Standby) Current
- 1MHz I²C Serial Interface
- 2.5V to 5.5V Operating Supply Voltage Range
- -40°C to +85°C Operating Temperature Range
- 8 pin UDFN 2x2mm (0.5mm pitch)

Applications

- AI Smart Speakers, Bluetooth / WiFi Loudspeakers
- Automotive Indicator and Ambiance Lighting
- IoT, Gaming, Toys, Indicator / Button Lighting

Brief Description

The KTD2052 is a fully programmable current regulator for up to four RGB LEDs (12 LEDs total). The device is ideally powered from a supply rail in the 3V to 5V nominal range. A 4-wire bus is multiplexed to reduce the pin-count and PCB traces to the LEDs. Each pin on the bus integrates a switch to the input voltage and a programmable low-dropout current sink regulator.

There are four versions: the KTD2052A/C are defaulted disabled at initial power-up, while the KTD2052B/D execute an AutoBreathe™ pattern by default at initial power-up or when reset. The KTD2052A/B use 0x74 7-bit I²C slave address, while the KTD2052C/D use 0x75. See the *Ordering Information* section.

The I²C control interface is used to set the on/off status and individual LED currents, as well as adjust the fade-rate. An internal flexible pattern generator with watchdog counter enables set-and-forget pattern executions, while more complex patterns may be executed from system firmware via the I²C interface.

BrightExtend™ optionally reduces dropout when the input voltage is too low for the forward voltage of the LEDs. Programmable CoolExtend™ prevents excessive heat when the input voltage, current settings, and ambient temperature are high.

The KTD2052 is packaged in RoHS and Green compliant 2mm x 2mm UDFN package.

Typical Application

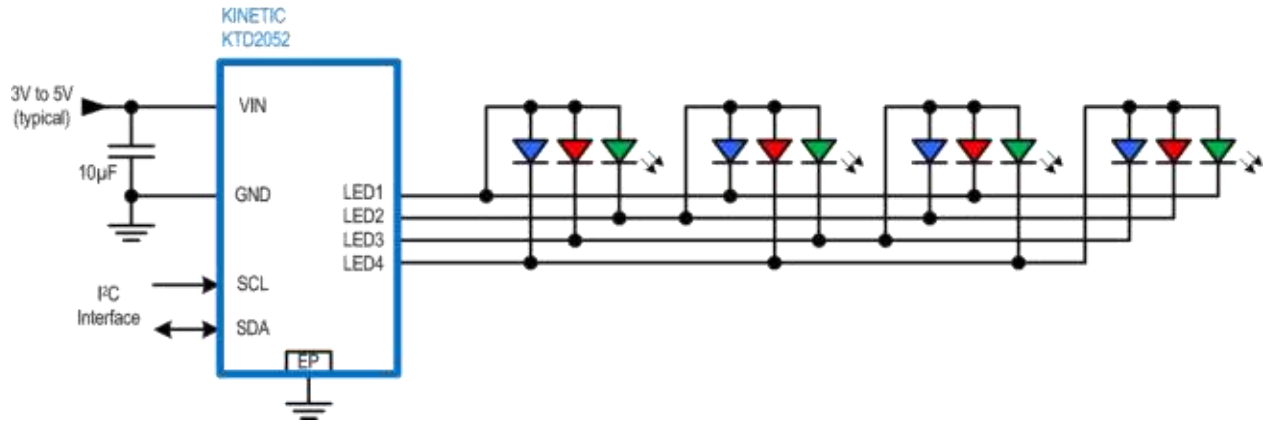

1. US Patent 8,482,216 B1

Pin Description

Pin #	Name	Function
8	VIN	Voltage Input to the LEDs and Supply Input for the IC – connect to a voltage source capable of supporting the maximum LED Vf and maximum current setting in the application. Connect a 10µF capacitor from VIN to GND.
7	GND	Ground – connect to the PCB ground plane using multiple vias. Connect to the exposed paddle directly under the IC.
1	SCL	I^2C Serial Interface Clock
2	SDA	I^2C Serial Interface Data
6	LED1	LED connection bus, wire 1
5	LED2	LED connection bus, wire 2
4	LED3	LED connection bus, wire 3
3	LED4	LED connection bus, wire 4
--	EP	Exposed Paddle -- connect to the GND pin directly under the IC and to the PCB ground plane using multiple vias directly under the IC.

Pinout Diagram

UDFN22-8

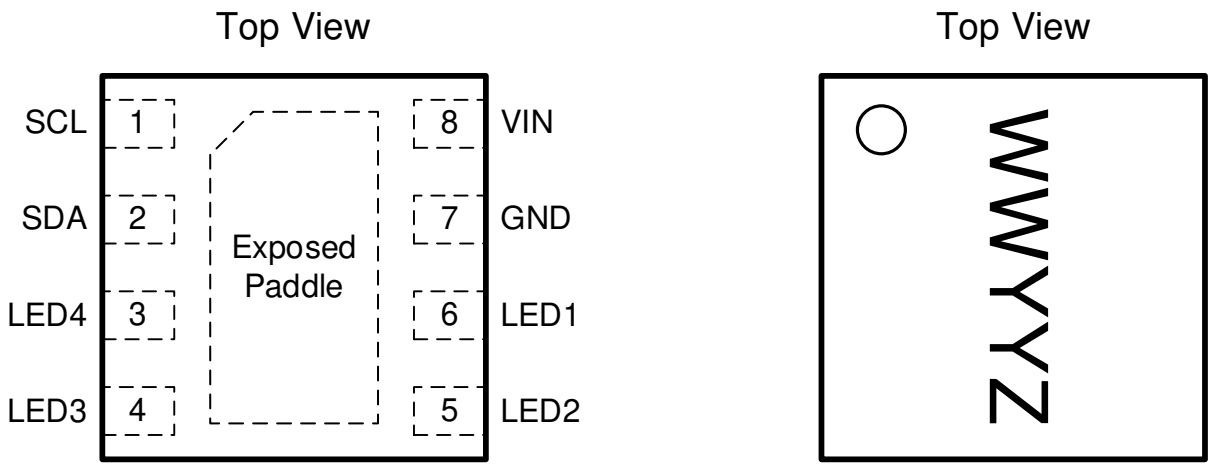

8-Pin 2mm x 2mm x 0.53mm
UDFN Package, 0.5mm pitch

Top Mark
WW = Device ID Code, YYZ = Date Code & Assembly Code

Absolute Maximum Ratings[2]

(T_A = +25°C unless otherwise noted)

Symbol	Description	Value	Units
V_{IN}	VIN to GND	-0.3 to 6	V
V_{IO}	SCL, SDA to GND	-0.3 to 6	V
V_{LED_n}	LED1, LED2, LED3, LED4 to GND	-0.3 to (V_{IN}+0.3)	V
T_J	IC Junction Operating Temperature Range	-40 to +150	°C
T_S	Storage Temperature Range	-55 to +150	°C
T_{LEAD}	Maximum Soldering Temperature (at leads, 10 sec)	+260	°C

ESD Ratings[3]

Symbol	Description	Value	Units
V_{ESD_HBM}	JEDEC JS-001-2017 ESD Human Body Model (all pins)	±2	kV

Thermal Capabilities[4]

Symbol	Description	Value	Units
Θ_{JA}	Thermal Resistance – Junction to Ambient	90	°C/W
Θ_{JC}	Thermal Resistance – Junction to Case	4.3	°C/W
P_D	Maximum Power Dissipation at T_A = +25°C (T_J = +150°C)	1389	mW
$\Delta P_D/\Delta_T$	Derating Factor Above T_A = +25°C	-11.1	mW/°C

Ordering Information

Part Number	AutoBreathe™	7-bit I²C Slave Address	Marking[5]	Operating Temperature	Package
KTD2052AEVAA-TR	No	0x74	PJYYZ	-40°C to +85°C	UDFN22-8
KTD2052BEVAA-TR	Yes	0x74	PPYYZ	-40°C to +85°C	UDFN22-8
KTD2052CEVAA-TR	No	0x75	QIYYZ	-40°C to +85°C	UDFN22-8
KTD2052DEVAA-TR	Yes	0x75	QJYYZ	-40°C to +85°C	UDFN22-8

2. Stresses above those listed in Absolute Maximum Ratings may cause permanent damage to the device. Functional operation at conditions other than the operating conditions specified is not implied. Only one Absolute Maximum rating should be applied at any one time.

3. ESD Ratings conform to JEDEC industry standards. Some pins may actually have higher performance. Ratings apply with chip enabled, disabled, or unpowered, unless otherwise noted.

4. Junction to Ambient thermal resistance is highly dependent on PCB layout. Values are based on thermal properties of the device when soldered to an EV board.

5. "YYZ" is the date code and assembly code.

Electrical Characteristics[6]

Unless otherwise noted, the *Min* and *Max* specs are applied over the full operation temperature range of -40°C to +85°C and V_{IN} = 2.5V to 5.5V. Typical values are specified at T_A = +25°C with V_{IN} = 3.6V.

Supply Specifications

Symbol	Description	Conditions	Min	Typ	Max	Units
V_{IN}	Supply Operating Range		2.5		5.5	V
V_{POR}	Power-On-Reset Threshold	V_{IN} Rising threshold		1.8		V
		Hysteresis		100		mV
V_{UVLO}	Under-Voltage Lockout Threshold	V_{IN} Rising threshold	2.2	2.3	2.4	V
		Hysteresis		100		mV
I_{IN}	No-Load Supply Current	Enabled via I^2C, all 0mA setting		1		mA
		Shutdown via I^2C		0.6		µA

Thermal Shutdown Specifications

Symbol	Description	Conditions	Min	Typ	Max	Units
T_{J_SHDN}	IC Junction Thermal Shutdown	T_J rising		150		°C
		Hysteresis		20		°C

I^2C-Compatible Interface Specifications (SCL, SDA), see Figure 1

Symbol	Description	Conditions	Min	Typ	Max	Units
V_{IH}	Input Logic High Threshold		1.2			V
V_{IL}	Input Logic Low Threshold				0.4	V
V_{OL}	SDA Output Logic Low	I_{SDA} = 3mA			0.4	V
t_1	SCL clock period		2.5			µs
t_2	Data in setup time to SCL high		100			ns
t_3	Data out stable after SCL low		0			ns
t_4	SDA low setup time to SCL low (Start)		100			ns
t_5	SDA high hold time after SCL high (Stop)		100			ns

(continued next page)

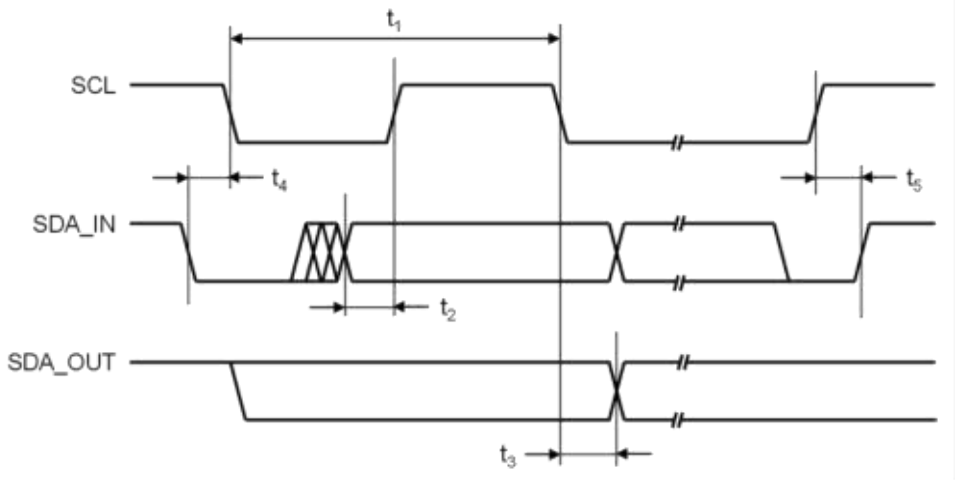

Figure 1. I^2C Compatible Interface Timing

6. Device is guaranteed to meet performance specifications over the –40°C to +85°C operating temperature range by design, characterization and correlation with statistical process controls.

Electrical Characteristics (continued)[7]

Unless otherwise noted, the *Min* and *Max* specs are applied over the full operation temperature range of -40°C to +85°C and V_{IN} = 2.5V to 5.5V. Typical values are specified at T_A = +25°C with V_{IN} = 3.6V.

LED Driver Specifications (LED_n)

Symbol	Description	Conditions	Min	Typ	Max	Units
I_{LED_SET}	Current Setting Range	192 steps of 0.125mA/step	0		24	mA
I_{LED_NM}	Night-Mode Current Setting Range	192 steps of 7.8125µA/step	0		1.5	mA
I_{LED_ON}	Current Sink Range (during t_{SLOT})	4*I_{LED_SET}, 192 steps of 0.5mA/step	0		96	mA
I_{LED_ACC}	Current Sink Accuracy	V_{IN}=3.6V, I_{LED_ON} = 96mA	-5	±1	+5	%
I_{LED_MATCH}	Current Sink Matching	V_{IN}=3.6V, I_{LED_ON} = 96mA, $(\lvert I_{LED} - I_{AVG}\rvert)/(I_{AVG})$	-5	±1	+5	%
I_{LED_LIN}	Current Sink Linearity	Offset Error		±0.1		LSB
		Differential Non-Linearity (DNL)		±0.4		
		Integral Non-Linearity (INL)		±0.7		
V_{LED_DO}	Current Sink Dropout Voltage	V_{IN}=3.6V, I_{LED_ON} = 96mA, I_{LED_ON} reduced to 90% of what it was with 1V headroom.		210		mV
I_{LED_LK}	Current Sink Leakage	0mA setting or shutdown, V_{LED_Nv} = V_{IN}		0.01	1	µA
R_{ON_SW}	LED_n Switch On-Resistance	Switch on		1.3		Ω
I_{LK_SW}	LED_n Switch Off Leakage	Switch off, LED_n = GND		0.01	1	µA

Multiplexor Timing Specifications

Symbol	Description	Conditions	Min	Typ	Max	Units
t_{FRAME}	Multiplexor Frame Time	Period	43	48	53	µs
		Frequency		20.8		kHz
t_{SLOT}	Multiplexor Slot Time	¼ of frame time		12		µs

Exponential Fade Specifications

Symbol	Description	Conditions	Min	Typ	Max	Units
I_{FADE_STEP}	Fade Resolution			7.8125		µA
t_{FADE_RATE0}	Fade Time-Constant 0 Setting Range	Exponential time-constant, 8 settings in octave increments	31		4000	ms

Flexible Pattern Generator

Symbol	Description	Conditions	Min	Typ	Max	Units
N_{PG_SLOTS}	Number of Pattern Generator Timeslots Setting Range	3 settings, 2 timeslots per step	4		8	n/a
t_{PG_TIME}	Pattern Generator Timeslot Duration Setting Range	8 settings in ½ octave increments	188		2000	ms
t_{FADE_RATE1}	Fade Time-Constant 1 Setting Range	Exponential time-constant, 8 settings in octave increments	31		4000	ms

(continued next page)

7. Device is guaranteed to meet performance specifications over the –40°C to +85°C operating temperature range by design, characterization and correlation with statistical process controls.

Electrical Characteristics (continued)[8]

Unless otherwise noted, the *Min* and *Max* specs are applied over the full operation temperature range of -40°C to +85°C and V_{IN} = 2.5V to 5.5V. Typical values are specified at T_A = +25°C with V_{IN} = 3.6V.

BrightExtend™ Technology Specifications

Symbol	Description	Conditions	Min	Typ	Max	Units
V_{DO_DETECT}	Current Sink Dropout Detection Voltage Threshold			V_{LED_DO}		mV
I_{LED_SCALE}	Global Current Scaling Range	BE_EN = 1	25		100	%

CoolExtend™ Technology Specifications

Symbol	Description	Conditions	Min	Typ	Max	Units
T_{J_REG}	Die Temperature Regulation Threshold Setting Range	4 steps of 15°C/step	90		135	°C
I_{LED_SCALE}	Global Current Scaling Range		25		100	%

8. Device is guaranteed to meet performance specifications over the –40°C to +85°C operating temperature range by design, characterization and correlation with statistical process controls.

Typical Characteristics

V_{IN} = 3.6V, T_A = +25°C, unless otherwise noted.

VIN Supply Current vs. Supply Voltage

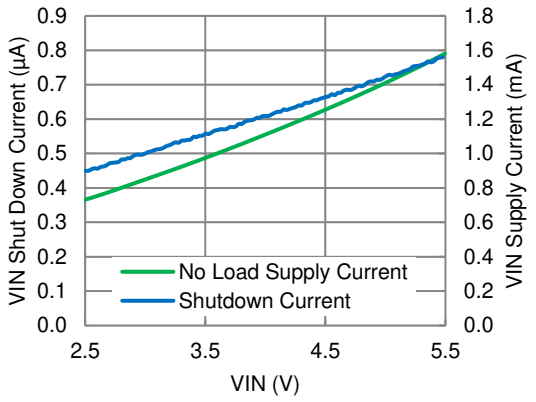

VIN Supply Current vs. Temperature
(VIN = 3.6V)

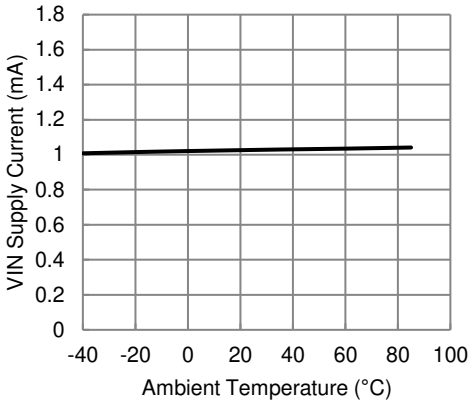

LED Current vs. Temperature
(12 Channels in 24mA Setting)

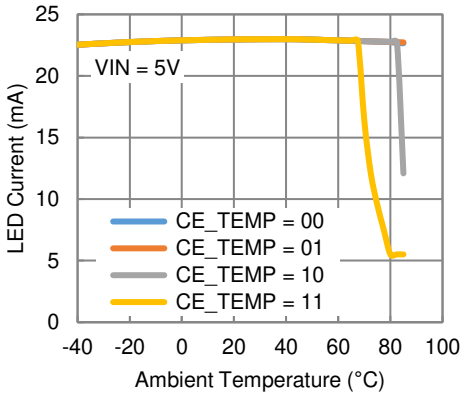

LED Current vs. Temperature
(6 Channels in 24mA Setting)

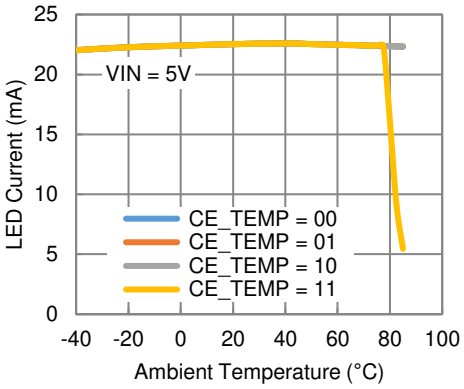

Non-Linearity vs. LED Current Setting
(full-scale error corrected; offset error not corrected)

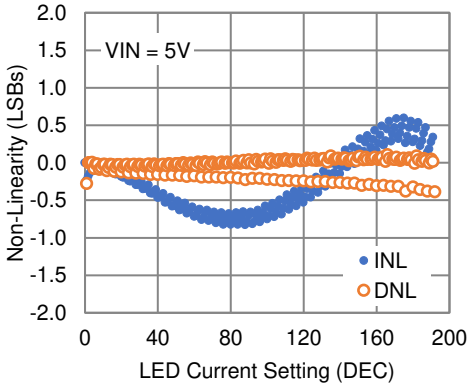

Typical Breathing Pattern Waveforms

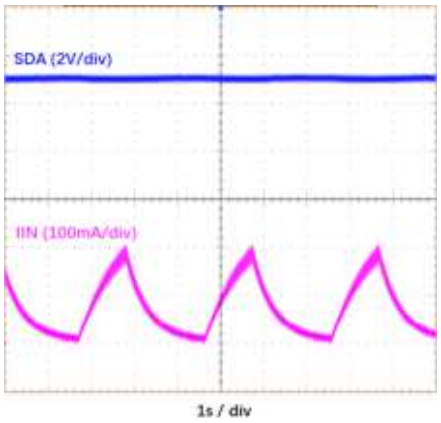

Functional Block Diagram

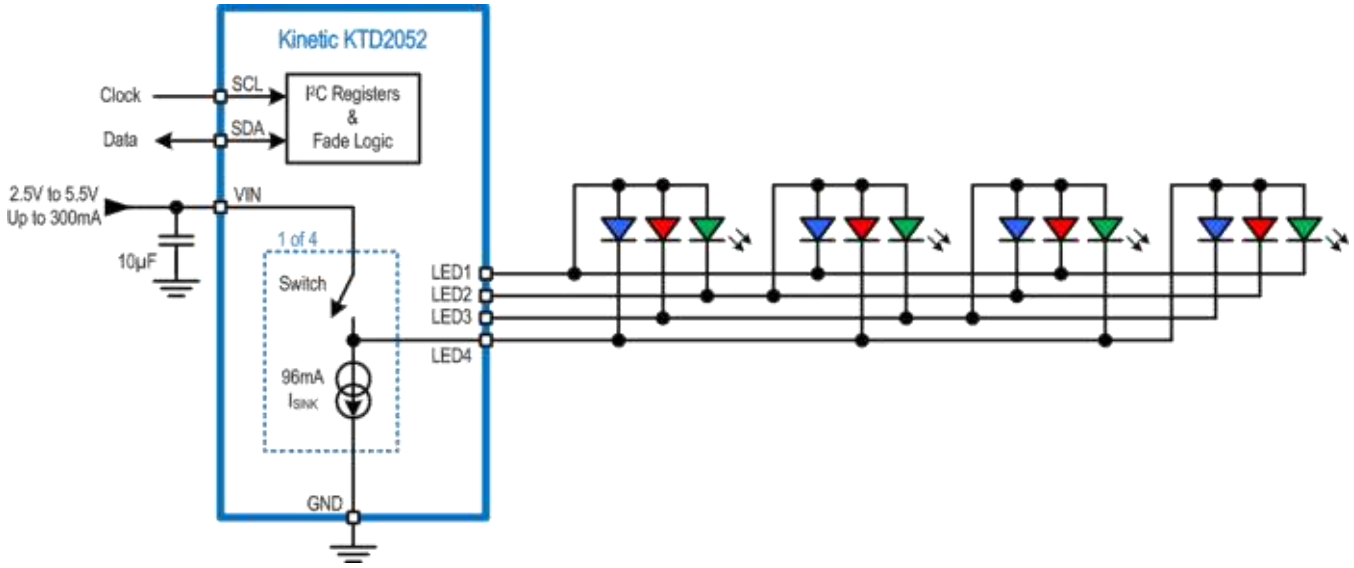

Figure 2. Functional Block Diagram

Functional Description

The KTD2052 is a fully programmable current regulator for up to 4 RGB LED modules (12 LEDs total). It is highly optimized for applications that require color lighting effects and animation patterns. Multiplexing is utilized to reduce the number of pins and number of PCB traces to the LEDs. A flexible but compact I²C register set, flexible pattern generator with watchdog counter, and 12 integrated exponential fade-engines greatly simplify the system software for complex lighting patterns. The register set includes a chip ID register, a fault/status MONITOR register, a global CONTROL register, twelve Color Setting registers, and seven Pattern Generator registers used to assign colors and configure pattern timing and behavior for the four RGB modules.

Multiplexing

Multiplexing enables 3x fewer wires/pins than conventional use of one wire per LED. The multiplexing uses a 4-wire bus such that each LED channel is enabled for 25% duty-cycle at 20.8kHz frequency. The frequency is chosen to be above the audio range. At this frequency and duty-cycle, most LEDs allow safe operation up to 100mA peak pulses. The KTD2052 uses current pulses up to 96mA peak, resulting in nominal average LED current settings up to 24mA.

The ID Register

The read-only ID register contains the vendor ID for Kinetic Technologies and chip ID for the KTD2052.

The MONITOR Register and Fault Protection

The read-only MONITOR register contains bits for short-circuit status, BrightExtend™ dropout status, CoolExtend™ die temperature status, and under-voltage lockout status or over-temperature thermal shutdown status.

In addition to just monitoring status, the KTD2052 contains protection circuits to safely withstand various fault conditions including:

1. Output Short-Circuit to GND
2. Output Short-Circuit to VIN
3. LED Failure as a Short-Circuit
4. LED Failure as an Open-Circuit
5. BrightExtend™ to reduce LED Dropout due to V_{IN} too low to support LED Vf

6. CoolExtend™ to prevent warm or hot die temperature due to power dissipation
7. Under-Voltage Lockout due to V_{IN} too low to support IC functionality
8. Thermal Shutdown due to excessive ambient or die temperature

The CONTROL Register

The CONTROL register contains bits that select Normal Mode, Night Mode, Global Off Request and Shutdown Mode, Register Reset, BrightExtend™, CoolExtend™, and the Exponential Fade-Rate.

Normal Mode

By default, the KTD2052A/C power up in Shutdown Mode when power is first applied at V_{IN}. (By default, the KTD2052B/D power up in Normal Mode to execute AutoBreathe™ when power is first applied at V_{IN}.) Enable Normal Mode operation by writing 10xxxxxx into the EN_MODE [1:0] bits in the CONTROL register (0x02). Normal Mode enables a 0 to 24mA current setting range with 125µA steps. Optionally, first program color settings and flexible pattern configuration while in Shutdown Mode, so that the RGB modules ramp immediately to the desired colors and lighting pattern upon enabling Normal Mode or Night Mode.

Night Mode

Enable Night Mode by writing 01xxxxxx into the EN_MODE [1:0] bits in the CONTROL register (0x02). In Night Mode, all Normal Mode LED current settings are divided by 16 for a 0 to 1.5mA current setting range with 7.8125µA steps. Note that fade ramps within Night Mode operate as normal but are still at the 7.8125µA resolution (same as normal mode). Also, note that the exponential fade engines allow fading between Normal and Night Modes.

Global Off Request and Shutdown (Standby) Mode

By default, the KTD2052A/C power up in Shutdown Mode when power is first applied to V_{IN}. (By default, the KTD2052B/D power up in Normal Mode to execute AutoBreathe™ when power is first applied at V_{IN}.) After enabling Normal Mode or Night Mode, request a return to Shutdown Mode by writing 00xxxxxx into the EN_MODE [1:0] bits in the CONTROL register (0x02). Once requested, all LEDs first fade down to zero current (off) at the programmed fade-rate time-constant. Once all LEDs reach zero current, the KTD2052 automatically enters Shutdown (Standby) Mode to reduce quiescent current. In Shutdown Mode, the I^2C interface and register contents are kept alive, so long as V_{IN} remains above the power-on reset threshold of 1.8V. Because a request for Shutdown first invokes a global fade ramp-down, certain lighting patterns, such as breathing patterns, are easily implemented by toggling between Normal Mode (or Night Mode) and Global Off Request.

Register Reset

Reset the registers to their default settings by writing 11xxxxxx into the EN_MODE [1:0] bits in the CONTROL register (0x02). After resetting, the CONTROL register reads back its default setting of 00000000 for KTD2052A/C and 10111100 for KTD2052B/D.

BrightExtend™ Technology

Patented BrightExtend™ enhances low-Vin performance for applications using a 1s Li Ion battery, 3s alkaline/NiMH batteries, or 3.3V to 4V supply rail. The BE_EN bit in the CONTROL register (0x02) enables BrightExtend™. Once enabled, if dropout is detected for any current sink, the global scaling of all current sinks is reduced until dropout is removed. This makes use of the LED's Vf curve, where lower LED current results in lower Vf. During BrightExtend™, all the LEDs become slightly dimmer in order to preserve the RGB color balance and maintain power supply ripple rejection (PSRR). The effect of scaling the global LED current is almost imperceptible to the human eye. When or if dropout is reduced, the global scaling gradually recovers. Global scaling is also reset in Shutdown (Standby) Mode.

CoolExtend™ Technology

Proprietary CoolExtend™ simplifies thermal management. The CE_TEMP [1:0] bits in the CONTROL register (0x02) select from four maximum die temperature regulation settings. If the die temperature exceeds the CoolExtend™ setting, the global scaling of all current sinks is reduced until the excessive die temperature is removed. During CoolExtend™, all the LEDs become slightly dimmer in order to reduce power dissipation in the current sinks. The effect of scaling the global LED current is almost imperceptible to the human eye. When or if die temperature is reduced, the global scaling gradually recovers. Global scaling is also reset in Shutdown (Standby) Mode.

Exponential Fade-Rate

The KTD2052 includes 12 internal, high-precision, fade engines for each LED to ramp the LED's current up or down when the LED is enabled/disabled or when the LED's current setting is changed. Each LED is independently ramped as soon as an enable/disable or current setting command is written via I²C for that LED. The fade-rate is universal for all LEDs; however, it can be changed at any time, even in the middle of a fade ramp. Additionally, enable/disable or current setting can be changed at any time, even in the middle of a fade ramp. The fade engines simply act as continuous-time smoothing filters.

The FADE_RATE0 [2:0] bits in the CONTROL register (0x02) select from eight fade-rates. The fade-rates range from very fast to very slow. The fade ramp steps are at 8µA resolution, which is 3072 steps for a full-scale ramp. This ensures ultra-smooth fading under all conditions, including very slow fades. Fading cannot be disabled, so if fading is not desired, use the fastest fade-rate, which appears as nearly instant to the human eye.

The fade ramp is not linear, but rather an exponential curve; therefore, the fade-rates are expressed using their exponential time-constant. Unlike competing solutions, it is extremely simple to calculate the fade duration because the LED current is nearly settled in 3 time-constants and fully settled in 6 time-constants, regardless of the starting current or ending current. However, due to the logarithmic response of the human eye, perceived brightness seems to settle in ½ of a time-constant when increasing brightness and 4 to 6 time-constants when decreasing brightness. See Figure 3. For this reason, some lighting patterns, such as breathing, benefit from a slow time-constant to ramp up the current and a faster time-constant to ramp down the current.

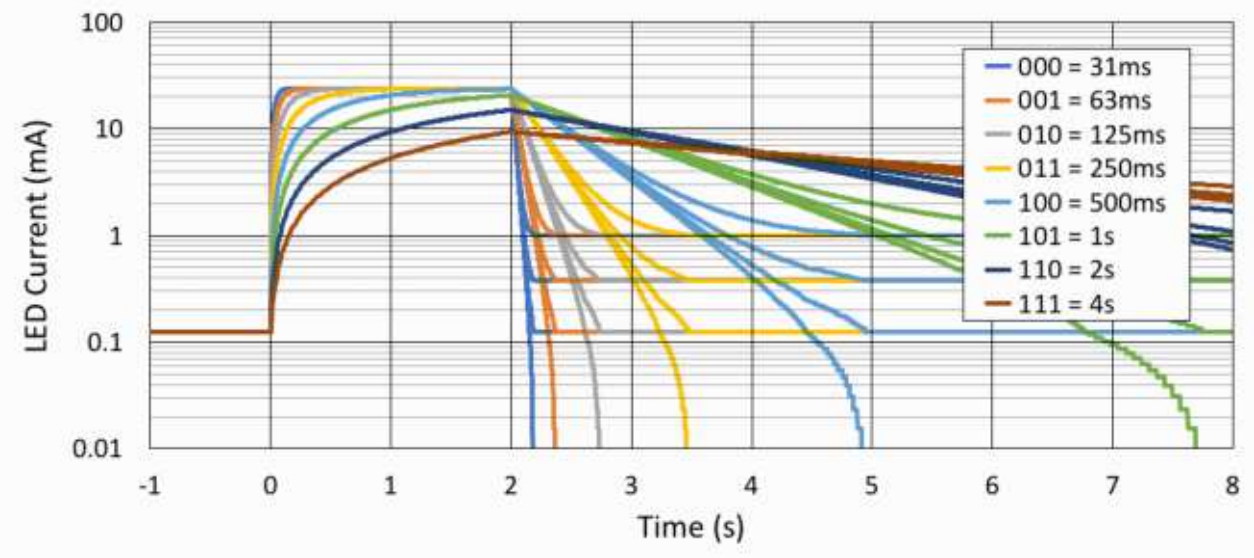

Figure 3. LED Brightness (current on log-scale) vs. Time vs. Fade Engine Time-Constant

The Current Setting Registers

The KTD2052 contains twelve registers (0x03 to 0x0E) to set colors of the four RGB modules. A color is set by programming a combination of red, green and blue LED currents. For example, the IRED1, IGRN1 and IBLU1 registers (0x03 to 0x05) set the color for RGB1. Of course, patterns may dynamically change the colors during a pattern, whenever needed for the desired effect.

Turning Off All RGB Modules

When turning off all 4 RGB modules, it can be done in three ways:

1. Use the Current Setting registers (0x03 to 0x0E) to set zero current for all R, G, and B LEDs. This requires writing to all 12 of the Current Setting registers.
2. Use the Global Off Request and Shutdown from the CONTROL register (0x02). See the *Global Off Request and Shutdown Mode* section of this datasheet. This requires writing to only 1 register.

3. Use the Pattern Watchdog register (0x15). When a pattern is executing pattern cycles and the watchdog counts down to zero, the flexible pattern generator then automatically issues a Global Off Request. When this happens, the CONTROL register (0x02) is updated to reflect the internally generated Global Off Request.

Regardless which technique is used, the LEDs fade to zero current at the programmed fade-rate setting.

Flexible Pattern Generator

The KTD2052 contains seven registers (0x0F to 0x15) for the internal Flexible Pattern Generator. The Flexible Pattern Generator includes a watchdog counter for the number of pattern cycles. For each pattern cycle, the number and duration of pattern timeslots is programmable. Additionally, there are two programmable fade-rates that may be applied during each of the pattern timeslots. And finally, the on/off target status of each of the four RGBs during each pattern timeslot is programmed.

1. PG_CNTL register (0x0F) –
   a. The PG_MODE [1:0] bits control the Flexible Pattern Generator as disabled or enabled with 4, 6, or 8 pattern timeslots.
   b. The PG_TIME [2:0] bits set the pattern timeslot duration in 8 steps from 188ms to 2s in ½ octave increments.
   c. The FADE_RATE1 [2:0] bits program a second fade-rate setting such that there are two fade-rates available for use with the Flexible Pattern Generator.
2. PG_FADE register (0x10) – Each bit in this register selects if FADE_RATE0 [2:0] or FADE_RATE1 [2:0] is used in each of the 4, 6, or 8 pattern timeslots. The selected fade-rate in each pattern timeslot applies universally to all RGBs (all LEDs).
3. PG_RGBn registers (0x11 to 0x14) – Each bit in these registers selects the on/off target status of the RGB1, RGB2, RGB3, and RGB4 modules during each of the 4, 6, or 8 pattern timeslots. Due to the nature of the exponential fade-engines, the LED currents ramp up or down within the timeslot per the selected fade-rate. Longer fade-rates may exceed the duration of the timeslot; therefore, the RGBs may or may not reach their target on/off status within the given timeslot. This allows more complex patterns within the Flexible Pattern Generator, such as a back-and-forth scanning pattern with a comet-tail effect (as popularized by the 1982 television show *Knight Rider*).
4. PG_WD register (0x15) – The watchdog counter sets the number of pattern cycles from 1 to 254 cycles. As the pattern cycles execute, the PG_WD register counts down and may be read to check how many cycles remain. Once the count reaches zero, the Flexible Pattern Generator stops and the KTD2052 automatically enters Shutdown (Standby) Mode. Before reaching zero, simply overwrite the count to continue executing the pattern for more cycles. To execute the pattern indefinitely (forever), simply write 0xFF; in this case, the counter remains at 255 and does not count down. At any time before the count reaches zero, the Flexible Pattern Generator may be interrupted by overwriting the watchdog count to 0 or setting the PG_MODE to off.

The RGB colors (LED currents) are not part of the Flexible Pattern Generator and should be pre-programmed in the Color Setting Registers before executing the pattern. However, the RGB colors can be changed dynamically during the execution of a pattern via normal I^2C commands as the pattern continues to execute automatically. Additionally, patterns that are too complicated for the Flexible Pattern Generator may be executed from software by writing to the CONTROL and Current Setting registers directly.

AutoBreathe™

The KTD2052B/D product variants execute an AutoBreathe™ pattern by default at initial power-up or when reset. The AutoBreathe™ feature may be useful for a variety of reasons. For example, systems with long boot-up times benefit by providing an immediate indication to the end customer that they have power and are starting up.

The AutoBreathe™ function automatically executes a mid-brightness breathing pattern in blue for all four RGBs. See the *I^2C Register Map* and register descriptions for the specific default settings. As factory programmed, the AutoBreathe™ pattern executes for 64 watchdog cycles × 8 pattern timeslots per cycle × 500ms per timeslot = 256 seconds total. At any time during AutoBreathe™, the host system may interrupt and program a different lighting status or pattern. If not interrupted, the KTD2052B/D automatically enter Shutdown (Standby) Mode after 256 seconds. For other customized default patterns, contact an authorized Kinetic Technologies representative.

I²C Interface Description

I²C Serial Data Bus

The KTD2052 supports the I²C bus protocol. A device that sends data onto the bus is defined as a transmitter, and a device receiving data as a receiver. The device that controls the bus is called a master, whereas the devices controlled by the master are known as slaves. A master device must generate the serial clock (SCL), control bus access and generate START and STOP conditions to control the bus. The KTD2052 operates as a slave on the I²C bus. Within the bus specifications, a standard mode (100kHz maximum clock rate) and a fast mode (400kHz maximum clock rate) are defined. The KTD2052 works in both modes. Connections to the bus are made through the open-drain I/O lines SDA and SCL.

The following bus protocol has been defined in Figure 4:

- Data transfer may be initiated only when the bus is not busy.
- During data transfer, the data line must remain stable whenever the clock line is HIGH. Changes in the data line while the clock line is high are interpreted as control signals.

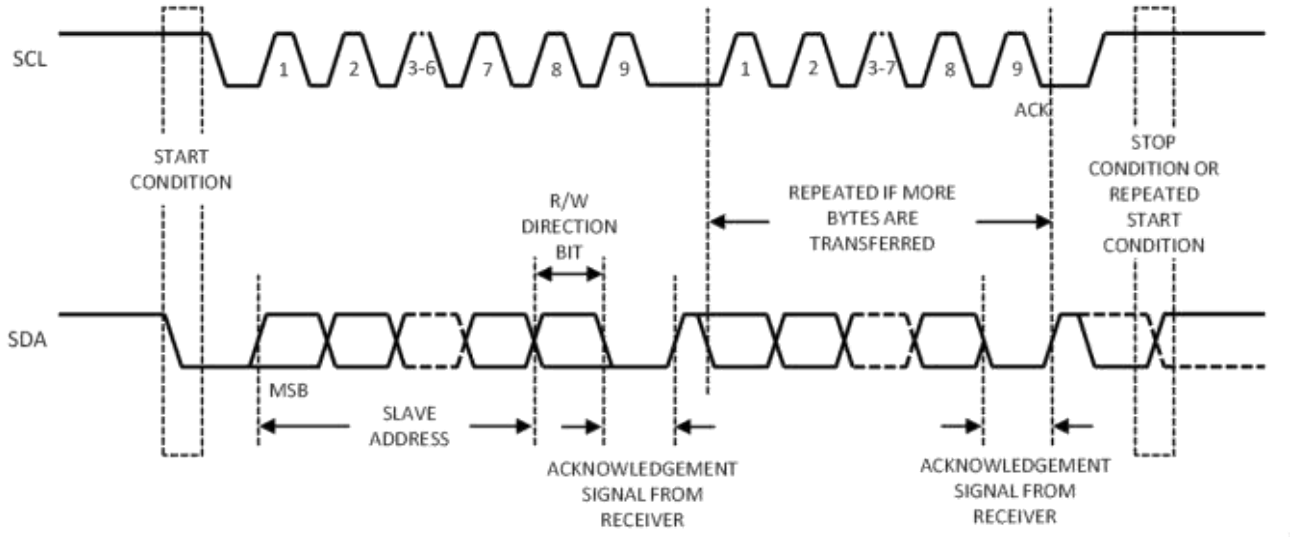

Figure 4. Data Transfer on I²C Serial Bus

Accordingly, the following bus conditions have been defined:

Bus Not Busy
Both data and clock lines remain HIGH.

Start Data Transfer
A change in the state of the data line, from HIGH to LOW, while the clock is HIGH, defines a START condition.

Stop Data Transfer
A change in the state of the data line, from LOW to HIGH, while the clock line is HIGH, defines the STOP condition.

Data Valid
The state of the data line represents valid data when, after a START condition, the data line is stable for the duration of the HIGH period of the clock signal. The data on the line must be changed during the LOW period of the clock signal. There is one clock pulse per bit of data.

Each data transfer is initiated with a START condition and terminated with a STOP condition. The number of data bytes transferred between START and STOP conditions are not limited and are determined by the master device. The information is transferred byte-wise and each receiver acknowledges with a ninth bit.

Acknowledge
Each receiving device, when addressed, is obliged to generate an acknowledge after the reception of each byte. The master device must generate an extra clock pulse that is associated with this acknowledge bit.

A device that acknowledges must pull down the SDA line during the acknowledge clock pulse in such a way that the SDA line is stable LOW during the HIGH period of the acknowledge-related clock pulse. Setup and hold times must also be considered.

The KTD2052 7-bit slave device address is 1110100 binary (0x74h).
There are two kinds of I²C data transfer cycles: write cycle and read cycle.

I²C Write Cycle

For I²C write cycle, data is transferred from a master to a slave. The first byte transmitted is the 7-bit slave address plus one bit of '0' for write. Next follows a number of data bytes. The slave returns an acknowledge bit after each received byte. Data is transferred with the most significant bit (MSB) first. Figure 5 shows the sequence of the I²C write cycle.

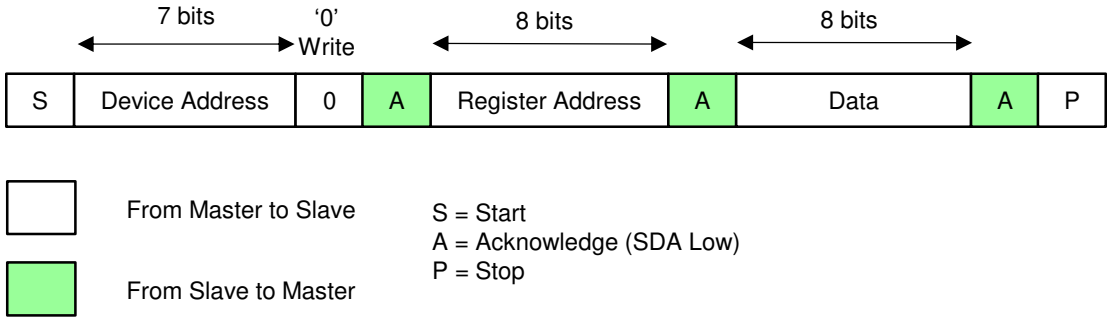

Figure 5. I²C Write Cycle

I²C Write Cycle Steps:
- Master generates start condition.
- Master sends 7-bit slave address (1110100 for KTD2052) and 1-bit data direction '0' for write.
- Slave sends acknowledge if the slave address is matched.
- Master sends 8-bit register address.
- Slave sends acknowledge.
- Master sends 8-bit data for that addressed register.
- Slave sends acknowledge.
- If master sends more data bytes, the register address will be incremented by one after each acknowledge.
- Master generates stop condition to finish the write cycle.

I²C Read Cycle

For I²C read cycle, data is transferred from a slave to a master. But to start the read cycle, master needs to write the register address first to define which register data to read. Figure 6 shows the steps of the I²C read cycle.

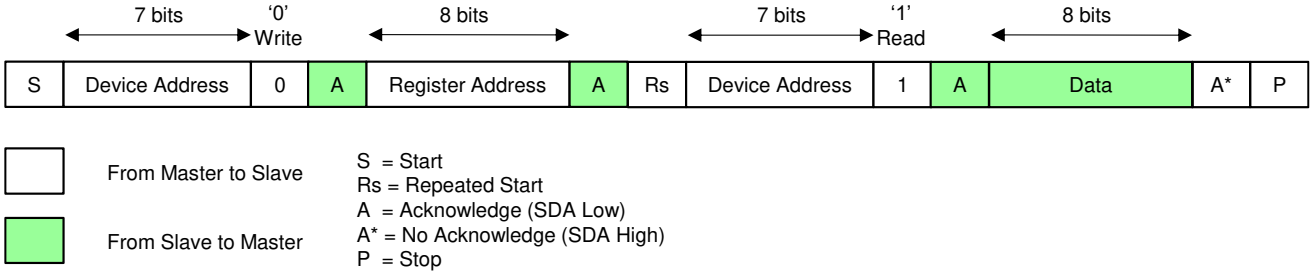

Figure 6. I²C Read Cycle

I²C Read Cycle Steps:

- Master generates start condition.
- Master sends 7-bit slave address (1110100 for KTD2052) and 1-bit data direction ‘0’ for write.
- Slave sends acknowledge if the slave address is matched.
- Master sends 8-bit register address.
- Slave sends acknowledge.
- Master generates repeated start condition.
- Master sends 7-bit slave address (1110100 for KTD2052) and 1-bit data direction ‘1’ for read.
- Slave sends acknowledge if the slave address is matched.
- Slave sends the data byte of that addressed register.
- If master sends acknowledge, the register address will be incremented by one after each acknowledge and the slave will continue to send the data for the updated addressed register.
- If master sends no acknowledge, the slave will stop sending the data.
- Master generates stop condition to finish the read cycle.

I²C Registers

I²C Slave Address

Options[9]	7-Bit Address	Write Address	Read Address	Bits 7 6 5 4 3 2 1 0
KTD2052A/B	0x74	0xE8	0xE9	1 1 1 0 1 0 0 *R/W*
KTD2052C/D	0x75	0xEA	0xEB	1 1 1 0 1 0 1 *R/W*

I²C Register Map

Hex Address	Name	Type	Access	Default Reset	B7	B6	B5	B4	B3	B2	B1	B0
0x00	ID	Data	R	1010 011**n**	VENDOR[2:0]			DIE_ID[4:0]				
0x01	MONITOR	Status	R	xxxx 0000	RSVD[3:0]				SC _STAT	DO _STAT	COOL _STAT	UV/OT _STAT
0x02	CONTROL	Config	R/W	**n**0**nn nn**00	EN_MODE[1:0]		BE_EN	CE_TEMP[1:0]		FADE_RATE0[2:0]		
0x03	IRED1	Config	R/W	0000 0000	IRED_SET1[7:0]							
0x04	IGRN1	Config	R/W	0000 0000	IGRN_SET1[7:0]							
0x05	IBLU1	Config	R/W	0**n**00 0000	IBLU_SET1[7:0]							
0x06	IRED2	Config	R/W	0000 0000	IRED_SET2[7:0]							
0x07	IGRN2	Config	R/W	0000 0000	IGRN_SET2[7:0]							
0x08	IBLU2	Config	R/W	0**n**00 0000	IBLU_SET2[7:0]							
0x09	IRED3	Config	R/W	0000 0000	IRED_SET3[7:0]							
0x0A	IGRN3	Config	R/W	0000 0000	IGRN_SET3[7:0]							
0x0B	IBLU3	Config	R/W	0**n**00 0000	IBLU_SET3[7:0]							
0x0C	IRED4	Config	R/W	0000 0000	IRED_SET4[7:0]							
0x0D	IGRN4	Config	R/W	0000 0000	IGRN_SET4[7:0]							
0x0E	IBLU4	Config	R/W	0**n**00 0000	IBLU_SET4[7:0]							
0x0F	PG_CNTL	Config	R/W	**nn**0**n nnnn**	PG_MODE[1:0]		PG_TIME[2:0]			FADE_RATE1[2:0]		
0x10	PG_FADE	Config	R/W	0000 0**nnn**	PS7_F	PS6_F	PS5_F	PS4_F	PS3_F	PS2_F	PS1_F	PS0_F
0x11	PG_RGB1	Config	R/W	0000 0**nnn**	PS7_1	PS6_1	PS5_1	PS4_1	PS3_1	PS2_1	PS1_1	PS0_1
0x12	PG_RGB2	Config	R/W	0000 0**nnn**	PS7_2	PS6_2	PS5_2	PS4_2	PS3_2	PS2_2	PS1_2	PS0_2
0x13	PG_RGB3	Config	R/W	0000 0**nnn**	PS7_3	PS6_3	PS5_3	PS4_3	PS3_3	PS2_3	PS1_3	PS0_3
0x14	PG_RGB4	Config	R/W	0000 0**nnn**	PS7_4	PS6_4	PS5_4	PS4_4	PS3_4	PS2_4	PS1_4	PS0_4
0x15	PG_WD	Config	R/W	0**n**00 0000	PG_WATCHDOG[7:0] (Note: requires two writes)							

x= don't care
n=0 for KTD2052A/C with default reset to off
n=1 for KTD2052B/D with default reset to AutoBreathe™

ID Data Register

Register Address 0x00

Bit	Name	Access	Default Reset	Description
7:5	VENDOR[2:0]	R	101	Vendor Identification 101 = Kinetic Technologies
4:0	DIE_ID[4:0]	R	0 011**n**	Die Type Identification 0 0110 = KTD2052A 0 0111 = KTD2052B

9. For Alternate Slave Addresses, please contact a Kinetic Technologies representative.

MONITOR Status Register

Register Address 0x01

Bit	Name	Access	Default Reset	Description
7:4	RSVD[3:0]	R	xxxx	Reserved
3	SC_STAT	R	0	Short-Circuit Protection Status 0 = no LED_n output is shorted to ground 1 = at least one LED_n output is shorted to ground
2	BE_STAT	R	0	BrightExtend™ Dropout Status 0 = there is no dropout, or BrightExtend™ is not enabled 1 = there is dropout, and BrightExtend™ is enabled and active
1	COOL_STAT	R	0	CoolExtend™ Die Temperature Status 0 = the die is not hot, and CoolExtend™ is not active 1 = the die is hot, and CoolExtend™ is active
0	UV/OT_STAT	R	0	V_{IN} Under-Voltage Lockout or Over Temperature Shutdown Status 0 = V_{IN} is above V_{UVLO}, and the die is not in thermal shutdown 1 = V_{IN} is between V_{POR} and V_{UVLO}, or the die is in thermal shutdown

CONTROL Configuration Register

Register Address 0x02

Bit	Name	Access	Default Reset	Description
7:6	EN_MODE[1:0]	R/W	**n**0	Enable Mode and Reset 00 = off (fade all to zero and then shutdown) (KTD2052A/C default) 01 = enable Night Mode (0 to 1.5mA range) 10 = enable Normal Mode (0 to 24mA range) (KTD2052B/D default) 11 = reset all registers to default settings
5	BE_EN	R/W	**n**	BrightExtend™ Enable 0 = disabled (KTD2052A/C default) 1 = enabled (KTD2052B/D default)
4:3	CE_TEMP[1:0]	R/W	**nn**	CoolExtend™ Temperature Setting 00 = 135°C (KTD2052A/C default) 01 = 120°C 10 = 105°C 11 = 90°C (KTD2052B/D default)
2:0	FADE_RATE0[2:0]	R/W	**n**00	Fade-Rate 0 Exponential Time-Constant Setting 000 = 32ms (KTD2052A/C default) 001 = 63ms 010 = 125ms 011 = 250ms 100 = 500ms (KTD2052B/D default) 101 = 1s 110 = 2s 111 = 4s

IRED1 Configuration Register

Register Address 0x03

Bit	Name	Access	Default Reset	Description
7:0	IRED_SET1[7:0]	R/W	0000 0000	Red Current Setting for RGB1 0000 0000 = 0µA 0000 0001 = 125µA • • • 1100 0000 = 24mA 1100 0001 = 24mA • • • 1111 1111 = 24mA

IGRN1 Configuration Register

Register Address 0x04

Bit	Name	Access	Default Reset	Description
7:0	IGRN_SET1[7:0]	R/W	0000 0000	Green Current Setting for RGB1 0000 0000 = 0µA 0000 0001 = 125µA • • • 1100 0000 = 24mA 1100 0001 = 24mA • • • 1111 1111 = 24mA

IBLU1 Configuration Register

Register Address 0x05

Bit	Name	Access	Default Reset	Description
7:0	IBLU_SET1[7:0]	R/W	0**n**00 0000	Blue Current Setting for RGB1 0000 0000 = 0µA (KTD2052A/C default) 0000 0001 = 125µA • • • 0100 0000 = 8mA (KTD2052B/D default) • • • 1100 0000 = 24mA 1100 0001 = 24mA • • • 1111 1111 = 24mA

IRED2 Configuration Register

Register Address 0x06

Bit	Name	Access	Default Reset	Description
7:0	IRED_SET2[7:0]	R/W	0000 0000	Red Current Setting for RGB2 0000 0000 = 0µA 0000 0001 = 125µA • • • 1100 0000 = 24mA 1100 0001 = 24mA • • • 1111 1111 = 24mA

IGRN2 Configuration Register

Register Address 0x07

Bit	Name	Access	Default Reset	Description
7:0	IGRN_SET2[7:0]	R/W	0000 0000	Green Current Setting for RGB2 0000 0000 = 0µA 0000 0001 = 125µA • • • 1100 0000 = 24mA 1100 0001 = 24mA • • • 1111 1111 = 24mA

IBLU2 Configuration Register

Register Address 0x08

Bit	Name	Access	Default Reset	Description
7:0	IBLU_SET2[7:0]	R/W	0**n**00 0000	Blue Current Setting for RGB2 0000 0000 = 0µA (KTD2052A/C default) 0000 0001 = 125µA • • • 0100 0000 = 8mA (KTD2052B/D default) • • • 1100 0000 = 24mA 1100 0001 = 24mA • • • 1111 1111 = 24mA

IRED3 Configuration Register

Register Address 0x09

Bit	Name	Access	Default Reset	Description
7:0	IRED_SET3[7:0]	R/W	0000 0000	Red Current Setting for RGB3 0000 0000 = 0µA 0000 0001 = 125µA • • • 1100 0000 = 24mA 1100 0001 = 24mA • • • 1111 1111 = 24mA

IGRN3 Configuration Register

Register Address 0x0A

Bit	Name	Access	Default Reset	Description
7:0	IGRN_SET3[7:0]	R/W	0000 0000	Green Current Setting for RGB3 0000 0000 = 0µA 0000 0001 = 125µA • • • 1100 0000 = 24mA 1100 0001 = 24mA • • • 1111 1111 = 24mA

IBLU3 Configuration Register

Register Address 0x0B

Bit	Name	Access	Default Reset	Description
7:0	IBLU_SET3[7:0]	R/W	0**n**00 0000	Blue Current Setting for RGB3 0000 0000 = 0µA (KTD2052A/C default) 0000 0001 = 125µA • • • 0100 0000 = 8mA (KTD2052B/D default) • • • 1100 0000 = 24mA 1100 0001 = 24mA • • • 1111 1111 = 24mA

IRED4 Configuration Register

Register Address 0x0C

Bit	Name	Access	Default Reset	Description
7:0	IRED_SET4[7:0]	R/W	0000 0000	Red Current Setting for RGB4 0000 0000 = 0µA 0000 0001 = 125µA • • • 1100 0000 = 24mA 1100 0001 = 24mA • • • 1111 1111 = 24mA

IGRN4 Configuration Register

Register Address 0x0D

Bit	Name	Access	Default Reset	Description
7:0	IGRN_SET4[7:0]	R/W	0000 0000	Green Current Setting for RGB4 0000 0000 = 0µA 0000 0001 = 125µA • • • 1100 0000 = 24mA 1100 0001 = 24mA • • • 1111 1111 = 24mA

IBLU4 Configuration Register

Register Address 0x0E

Bit	Name	Access	Default Reset	Description
7:0	IBLU_SET4[7:0]	R/W	0**n**00 0000	Blue Current Setting for RGB4 0000 0000 = 0µA (KTD2052A/C default) 0000 0001 = 125µA • • • 0100 0000 = 8mA (KTD2052B/D default) • • • 1100 0000 = 24mA 1100 0001 = 24mA • • • 1111 1111 = 24mA

PG_CNTL Configuration Register

Register Address 0x0F

Bit	Name	Access	Default Reset	Description
7:6	PG_MODE[1:0]	R/W	**nn**	Pattern Generator Enable and Mode 00 = PG off (software control mode) (KTD2052A/C default) 01 = PG enabled with 4 pattern-slots 10 = PG enabled with 6 pattern-slots 11 = PG enabled with 8 pattern-slots (KTD2052B/D default)
5:3	PG_TIME[2:0]	R/W	0**nn**	Pattern-Slot Duration 000 = 188ms (KTD2052A/C default) 001 = 250ms 010 = 375ms 011 = 500ms (KTD2052B/D default) 100 = 750ms 101 = 1.0s 110 = 1.5s 111 = 2.0s
2:0	FADE_RATE1[2:0]	R/W	**nnn**	Fade-Rate 1 Exponential Time-Constant Setting 000 = 32ms (KTD2052A/C default) 001 = 63ms 010 = 125ms 011 = 250ms 100 = 500ms 101 = 1s 110 = 2s 111 = 4s (KTD2052B/D default)

PG_FADE Configuration Register

Register Address 0x10

Bit	Name	Access	Default Reset	Description
7	PS7_F	R/W	0	Pattern-Slot 7 Fade-Rate Selection 0 = use FADE_RATE0 1 = use FADE_RATE1
6	PS6_F	R/W	0	Pattern-Slot 6 Fade-Rate Selection 0 = use FADE_RATE0 1 = use FADE_RATE1
5	PS5_F	R/W	0	Pattern-Slot 5 Fade-Rate Selection 0 = use FADE_RATE0 1 = use FADE_RATE1
4	PS4_F	R/W	0	Pattern-Slot 4 Fade-Rate Selection 0 = use FADE_RATE0 1 = use FADE_RATE1
3	PS3_F	R/W	0	Pattern-Slot 3 Fade-Rate Selection 0 = use FADE_RATE0 1 = use FADE_RATE1
2	PS2_F	R/W	**n**	Pattern-Slot 2 Fade-Rate Selection 0 = use FADE_RATE0 (KTD2052A/C default) 1 = use FADE_RATE1 (KTD2052B/D default)
1	PS1_F	R/W	**n**	Pattern-Slot 1 Fade-Rate Selection 0 = use FADE_RATE0 (KTD2052A/C default) 1 = use FADE_RATE1 (KTD2052B/D default)
0	PS0_F	R/W	**n**	Pattern-Slot 0 Fade-Rate Selection 0 = use FADE_RATE0 (KTD2052A/C default) 1 = use FADE_RATE1 (KTD2052B/D default)

PG_RGB1 Configuration Register

Register Address 0x11

Bit	Name	Access	Default Reset	Description
7	PS7_1	R/W	0	Pattern-Slot 7 RGB1 On/Off Selection 0 = fade down and turn off 1 = turn on and fade up
6	PS6_1	R/W	0	Pattern-Slot 6 RGB1 On/Off Selection 0 = fade down and turn off 1 = turn on and fade up
5	PS5_1	R/W	0	Pattern-Slot 5 RGB1 On/Off Selection 0 = fade down and turn off 1 = turn on and fade up
4	PS4_1	R/W	0	Pattern-Slot 4 RGB1 On/Off Selection 0 = fade down and turn off 1 = turn on and fade up
3	PS3_1	R/W	0	Pattern-Slot 3 RGB1 On/Off Selection 0 = fade down and turn off 1 = turn on and fade up
2	PS2_1	R/W	**n**	Pattern-Slot 3 RGB1 On/Off Selection 0 = fade down and turn off (KTD2052A/C default) 1 = turn on and fade up (KTD2052B/D default)
1	PS1_1	R/W	**n**	Pattern-Slot 1 RGB1 On/Off Selection 0 = fade down and turn off (KTD2052A/C default) 1 = turn on and fade up (KTD2052B/D default)
0	PS0_1	R/W	**n**	Pattern-Slot 0 RGB1 On/Off Selection 0 = fade down and turn off (KTD2052A/C default) 1 = turn on and fade up (KTD2052B/D default)

PG_RGB2 Configuration Register

Register Address 0x12

Bit	Name	Access	Default Reset	Description
7	PS7_2	R/W	0	Pattern-Slot 7 RGB2 On/Off Selection 0 = fade down and turn off 1 = turn on and fade up
6	PS6_2	R/W	0	Pattern-Slot 6 RGB2 On/Off Selection 0 = fade down and turn off 1 = turn on and fade up
5	PS5_2	R/W	0	Pattern-Slot 5 RGB2 On/Off Selection 0 = fade down and turn off 1 = turn on and fade up
4	PS4_2	R/W	0	Pattern-Slot 4 RGB2 On/Off Selection 0 = fade down and turn off 1 = turn on and fade up
3	PS3_2	R/W	0	Pattern-Slot 3 RGB2 On/Off Selection 0 = fade down and turn off 1 = turn on and fade up
2	PS2_2	R/W	**n**	Pattern-Slot 3 RGB2 On/Off Selection 0 = fade down and turn off (KTD2052A/C default) 1 = turn on and fade up (KTD2052B/D default)
1	PS1_2	R/W	**n**	Pattern-Slot 1 RGB2 On/Off Selection 0 = fade down and turn off (KTD2052A/C default) 1 = turn on and fade up (KTD2052B/D default)
0	PS0_2	R/W	**n**	Pattern-Slot 0 RGB2 On/Off Selection 0 = fade down and turn off (KTD2052A/C default) 1 = turn on and fade up (KTD2052B/D default)

PG_RGB3 Configuration Register

Register Address 0x13

Bit	Name	Access	Default Reset	Description
7	PS7_3	R/W	0	Pattern-Slot 7 RGB3 On/Off Selection 0 = fade down and turn off 1 = turn on and fade up
6	PS6_3	R/W	0	Pattern-Slot 6 RGB3 On/Off Selection 0 = fade down and turn off 1 = turn on and fade up
5	PS5_3	R/W	0	Pattern-Slot 5 RGB3 On/Off Selection 0 = fade down and turn off 1 = turn on and fade up
4	PS4_3	R/W	0	Pattern-Slot 4 RGB3 On/Off Selection 0 = fade down and turn off 1 = turn on and fade up
3	PS3_3	R/W	0	Pattern-Slot 3 RGB3 On/Off Selection 0 = fade down and turn off 1 = turn on and fade up
2	PS2_3	R/W	**n**	Pattern-Slot 3 RGB3 On/Off Selection 0 = fade down and turn off (KTD2052A/C default) 1 = turn on and fade up (KTD2052B/D default)
1	PS1_3	R/W	**n**	Pattern-Slot 1 RGB3 On/Off Selection 0 = fade down and turn off (KTD2052A/C default) 1 = turn on and fade up (KTD2052B/D default)
0	PS0_3	R/W	**n**	Pattern-Slot 0 RGB3 On/Off Selection 0 = fade down and turn off (KTD2052A/C default) 1 = turn on and fade up (KTD2052B/D default)

PG_RGB4 Configuration Register

Register Address 0x14

Bit	Name	Access	Default Reset	Description
7	PS7_4	R/W	0	Pattern-Slot 7 RGB4 On/Off Selection 0 = fade down and turn off 1 = turn on and fade up
6	PS6_4	R/W	0	Pattern-Slot 6 RGB4 On/Off Selection 0 = fade down and turn off 1 = turn on and fade up
5	PS5_4	R/W	0	Pattern-Slot 5 RGB4 On/Off Selection 0 = fade down and turn off 1 = turn on and fade up
4	PS4_4	R/W	0	Pattern-Slot 4 RGB4 On/Off Selection 0 = fade down and turn off 1 = turn on and fade up
3	PS3_4	R/W	0	Pattern-Slot 3 RGB4 On/Off Selection 0 = fade down and turn off 1 = turn on and fade up
2	PS2_4	R/W	**n**	Pattern-Slot 3 RGB4 On/Off Selection 0 = fade down and turn off (KTD2052A/C default) 1 = turn on and fade up (KTD2052B/D default)
1	PS1_4	R/W	**n**	Pattern-Slot 1 RGB4 On/Off Selection 0 = fade down and turn off (KTD2052A/C default) 1 = turn on and fade up (KTD2052B/D default)
0	PS0_4	R/W	**n**	Pattern-Slot 0 RGB4 On/Off Selection 0 = fade down and turn off (KTD2052A/C default) 1 = turn on and fade up (KTD2052B/D default)

PG_WD Configuration Register

Register Address 0x15

Bit	Name	Access	Default Reset	Description
7:0	PG_WATCHDOG [7:0]	R/W	0**n**00 0000	Pattern Watchdog Counter 0000 0000 = watchdog timed out (KTD2052A/C default) 0000 0001 = 1 pattern cycle remaining 0000 0010 = 2 pattern cycles remaining • • • 0100 0000 = 64 pattern cycles remaining (KTD2052B/D default) • • • 1111 1110 = 254 pattern cycles remaining 1111 1111 = infinity pattern cycles remaining (do not count down) NOTE: Write all commands to this register twice. This allows the watchdog count to be internally transferred and an I^2C acknowledge issued.

Applications Information

Input Bypass Capacitor

Choose an input capacitor with voltage rating of 6.3V or more, 10µF total nominal capacitance or more, and 1608M (0603) case-size or larger. Larger values and larger case-size provide more effective capacitance when considering the DC bias derating characteristic of the capacitor.

Additional Input Bulk Capacitance

Note that if the PCB's input voltage is supplied through a connector or a cable, add additional bypass capacitance where V_{IN} first arrives to the PCB to control input ripple and ringing. Typically, use one or two 22µF ceramic capacitors in parallel.

RGB LED Selection

Choose RGB modules with suitable color, brightness, and power dissipation to handle the requirements of the application. The LEDs must have reverse voltage rating of V_R = 5V or more. Do not use RGB modules with integrated Zener diode protection clamps that do not allow reverse voltage, as these are incompatible with the multiplexing in the KTD2052. Additionally, the LEDs should have a guaranteed minimum operating current of 2mA or less.

Recommended RGB LEDs

Manufacturer	Model #	Luminous Intensity (typ)	Size
Cree	CLV1L-FKB Series	Red = 673mcd Green = 1260mcd Blue = 266mcd	PLCC-4 3.2 x 2.8 x 1.9mm
Everlight	**19-337C/RSBHGHC-A88/4T(KNT)** **19-337C/RSBHGHC-A88/4T**	**Red = 565mcd** **Green = 1270mcd** **Blue = 255mcd**	**SMD-6** **1.6 x 1.6 x 0.5mm**
Kingbright[10]	APTF1616SEEZ Series	Red = 110mcd Green = 280mcd Blue = 70mcd	SMD-4 1.6 x 1.6 x 0.7mm
Lite-On	LTST-C19HE1WT	Red = 92mcd Green = 230mcd Blue = 71mcd	SMD-4 1.6 x 1.6 x 0.35mm
SunLED[10]	XZMDKDGCBD110W	Red = 79mcd Green = 278mcd Blue = 69mcd	SMD-4 1.6 x 1.6 x 0.7mm
Würth Elektronik	WL-SFCW SMD 150066M173000	Red = 70mcd Green = 360mcd Blue = 80mcd	SMD-4 1.6 x 1.6 x 0.4mm

Please tell the LED manufacturer that you are using the KTD2052 RGB LED driver IC. Note that the Everlight RGB has high-intensity in small package size at good value and is therefore chosen for the KTD2052 Evaluation Board.

10. These RGB LEDs are pin-to-pin.

LED Current Temperature Derating

Driving LED at high temperature can accelerate the LED's degradation. Consult the LED vendor for Forward Current Derating Curve, similar to Figure 7, as an example. Set the operating point of the LED on or below the curve to avoid any thermal degradation.

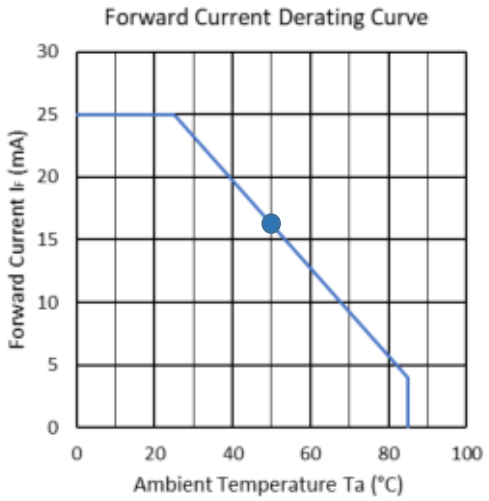

Figure 7. Forward Current Derating Curve (typical example)

LED Safe Pulse-Current Rating

The LED pulse current rating should be 4x higher than the average forward current required in the application. For example, an LED with forward current rating of I_F = 25mA is usually rated for a peak forward current of I_{FP} = 100mA. The conditions of this rating are usually Duty = 10% at 1kHz. However, the KTD2052 multiplexing is at Duty = 25% at 20.8kHz. In most cases, the higher duty is counteracted by the higher frequency such that the I_{FP} = 100mA is similar under both conditions. Consult with the LED manufacturer for a graph of permissible pulse handling capability showing pulse current I_{FP} vs. pulse duration t_P vs. duty. For the KTD2052, t_P = 12µs and duty = 0.25. From the graph, the maximum I_{FP} can be found for the red, green and blue LEDs. Once the upper limit is found, program the KTD2052 current settings to no higher than I_{FP}/4.

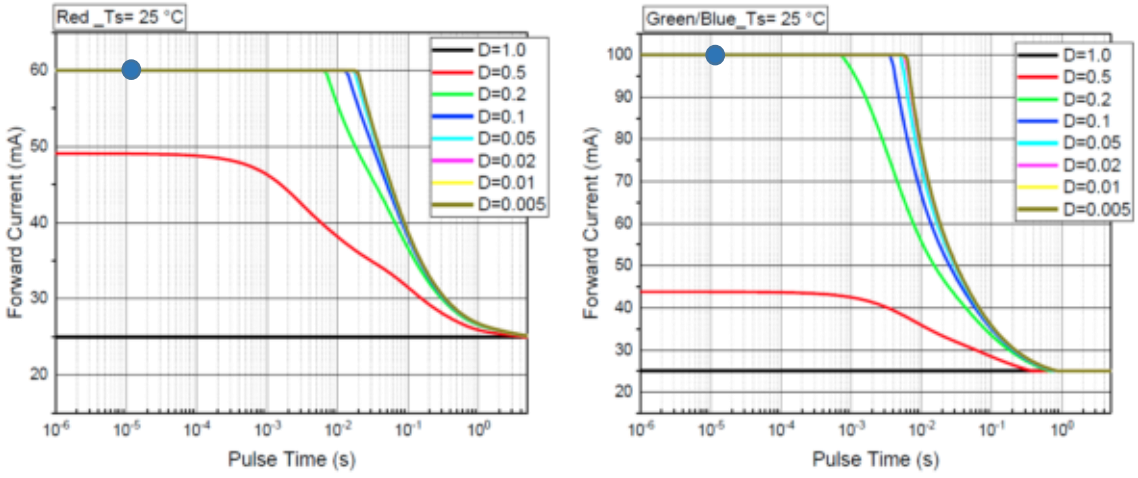

Figure 8. Permissible Pulse Handling Capability (courtesy of Everlight Corp.)

De-Ghosting

Ghosting is defined as unintended light glow emitting from LEDs that are supposed to be off. It is an inherent artifact when multiplexing LEDs, especially when using LEDs that have very different Vf. In the case of RGB LEDs, the red LED Vf is much lower than the green and blue Vf. However, with simple techniques, all ghosting can be controlled and eliminated when using the KTD2052.

Many lighting patterns do not manifest any ghosting at all – for example, breathing patterns. But for patterns with ghosting, the KTD2052 includes proprietary circuitry to reduce the ghosting artifacts. Even so, some patterns are still susceptible to ghosting. If the diffuser is not sufficiently hiding all ghosting, there are two simple solutions:

1. Software Solution – Slightly modify only the software patterns that show visible ghosting. In general, if one RGB on a bus is enabled as blue only (or green only) at a bright current setting, other RGBs on the same bus that are supposed to be off may exhibit ghosting. As an example, if intending bright blue in one RGB, there may be red and/or green glow in other nearby RGBs. One improvement is to lower the current setting of the bright blue RGB, which also lowers its Vf. Another improvement is to use slightly pastel blue instead of pure blue by turning on just a small amount of red and green in the bright blue RGB. Generally, you can eliminate all ghosting by combining both of these software improvements. By example, instead of setting the blue RGB with current settings of red = 0mA, green = 0mA, and blue = 24mA, try current settings of red = 1mA, green = 1mA, and blue = 16mA.
2. Hardware Solution – Insert a small signal diode, such as 1N4148, in series with each red LED to effectively increase its Vf.

Pattern Generation using System Software or the Flexible Pattern Generator

An Evaluation System is available for the KTD2052 that demonstrates how to program multiple example patterns. The examples are written as parameterized, reusable functions in Python script. These functions are easy to translate into other software languages.

Recommended PCB Layout

See Figure 9 for an example PCB layout. When laying out a PCB, follow the below steps in sequence:

1. A 2-layer or higher PCB is recommended for robust ground connections and for thermal power dissipation with the exposed paddle package.
2. Place multiple vias directly under the IC from the exposed paddle landing pattern to the ground plane.
3. Connect the GND pin to the exposed paddle directly under the IC on the top layer.
4. Place the input bypass capacitor as close to the VIN and GND pins as possible. Connect the ground terminal of the capacitor to the ground plane using multiple vias. Connect the VIN terminal of the capacitor to the power plane or trace, using multiple vias if applicable.
5. If power is supplied through a cable/connector, add additional bulk bypass capacitance near the connector where the power first arrives to the PCB in order to control input ripple and ringing.
6. Route the output traces and vias with suitable thickness, as necessary for the peak currents. Up to 288mA (96mA x 3LEDs) can flow in the output traces, but most applications use less peak current due to LED temperature derating and LED pulse current ratings.

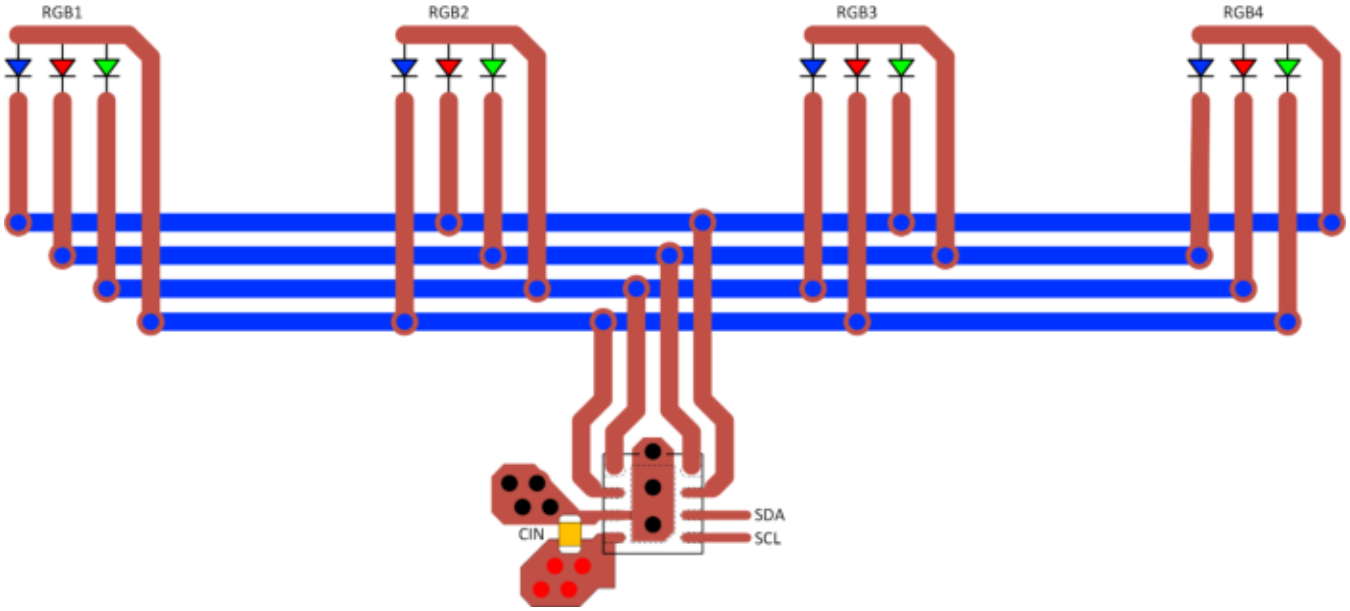

Figure 9. Recommended PCB Layout

Packaging Information

UDFN22-8 (2.0mm x 2.0mm x 0.53mm)

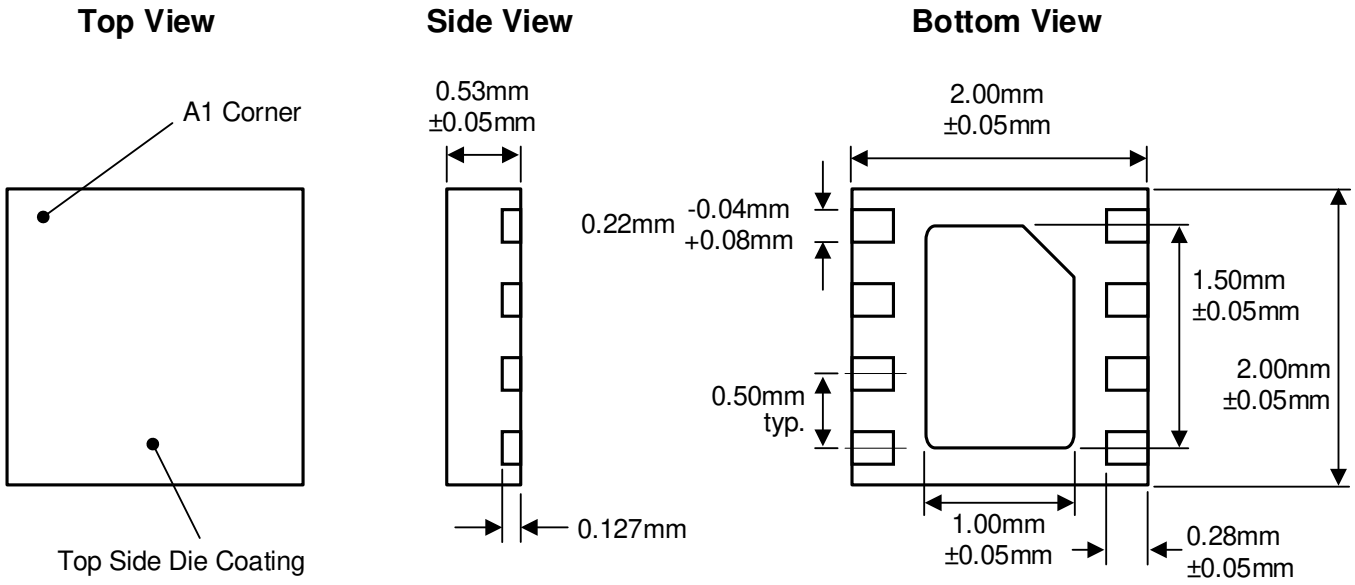

Recommended Footprint

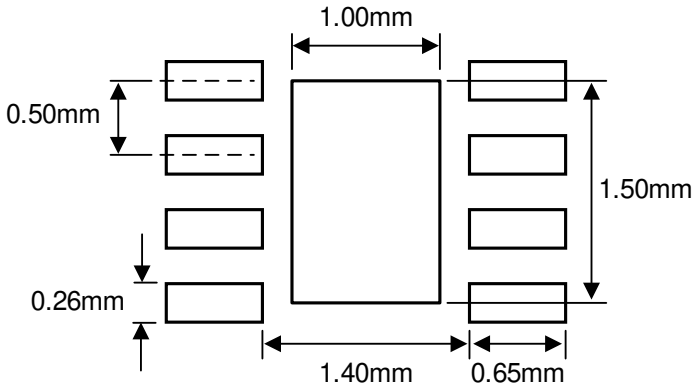

Kinetic Technologies cannot assume responsibility for use of any circuitry other than circuitry entirely embodied in a Kinetic Technologies product. No intellectual property or circuit patent licenses are implied. Kinetic Technologies reserves the right to change the circuitry and specifications without notice at any time.