Ordering number : ENA0712A

LC75832E
LC75832W

ON Semiconductor®

http://onsemi.com

CMOS IC

Static Drive, 1/2-Duty Drive General-Purpose LCD Display Driver

Overview

The LC75832E and 75832W are static drive or 1/2-duty drive, microcontroller-controlled general-purpose LCD drivers that can be used in applications such as frequency display in products with electronic tuning. In addition to being capable to drive up to 108 segments directly, they can control up to 4 general-purpose output ports. Since the LC75832E and LC75832W use separate power supply systems for the LCD drive block and the logic block, the LCD driver block power-supply voltage can be set to any voltage in the range 2.7 to 6.0 volts, regardless of the logic block power-supply voltage.

Features

- Serial data control of switching between static drive mode and 1/2 duty drive mode.
- Up to 54 segments can be displayed in static drive (1/1 duty) mode and up to 108 segments can be displayed in 1/2 duty drive mode.
- Serial data input supports CCB* format communication with the system controller.
- Serial data control of the power-saving mode based backup function and the all segments forced off function.
- Serial data control of switching between the segment output port and general-purpose output port functions (up to 4 general-purpose output ports).
- Serial data control of the frame frequency of the common and segment output waveforms.
- Either RC oscillator operating or external clock operating mode can be selected with the serial control data.
- High generality, since display data is displayed directly without the intervention of a decoder circuit.
- Independent V_{LCD} for the LCD driver block (V_{LCD} can be set to any voltage in the range of 2.7 to 6.0 volts.) regardless of the logic block supply-voltage.
- The $\overline{INH}$ pin allows the display to be forced to the off state.
- Allows compatible operation with the LC75822 (822 mode transfer function).

- CCB is ON Semiconductor® 's original format. All addresses are managed by ON Semiconductor® for this format.

- CCB is a registered trademark of Semiconductor Components Industries, LLC.

Specifications

Absolute Maximum Ratings at Ta = 25°C, V_{SS} = 0V

Parameter	Symbol	Conditions	Ratings	Unit
Maximum supply voltage	V_{DD} max	V_{DD}	-0.3 to +7.0	V
	V_{LCD} max	V_{LCD}	-0.3 to +7.0	
Input voltage	$V_{IN}1$	CE, CL, DI, $\overline{INH}$	-0.3 to +7.0	V
	$V_{IN}2$	OSC	-0.3 to V_{DD}+0.3	
Output voltage	$V_{OUT}1$	OSC	-0.3 to V_{DD}+0.3	V
	$V_{OUT}2$	S1 to S54, COM1, COM2, P1 to P4	-0.3 to V_{LCD}+0.3	
Output current	$I_{OUT}1$	S1 to S54	300	μA
	$I_{OUT}2$	COM1, COM2	3	mA
	$I_{OUT}3$	P1 to P4	5	
Allowable power dissipation	Pd max	Ta=105°C	100	mW
Operating temperature	Topr		-40 to +105	°C
Storage temperature	Tstg		-55 to +125	°C

Stresses exceeding Maximum Ratings may damage the device. Maximum Ratings are stress ratings only. Functional operation above the Recommended Operating Conditions is not implied. Extended exposure to stresses above the Recommended Operating Conditions may affect device reliability.

Allowable Operating Ranges at Ta = -40 to +105°C, V_{SS} = 0V

Parameter	Symbol	Conditions	Ratings			unit
			min	typ	max	
Supply voltage	V_{DD}	V_{DD}	2.7		6.0	V
	V_{LCD}	V_{LCD}	2.7		6.0	
Input high-level voltage	$V_{IH}1$	CE, CL, DI, $\overline{INH}$	0.8V_{DD}		6.0	V
	$V_{IH}2$	OSC external clock operating mode	0.7V_{DD}		V_{DD}	
Input low-level voltage	$V_{IL}1$	CE, CL, DI, $\overline{INH}$	0		0.2V_{DD}	V
	$V_{IL}2$	OSC external clock operating mode	0		0.3V_{DD}	
Recommended external resistor for RC oscillation	Rosc	OSC RC oscillator operating mode		39		kΩ
Recommended external capacitor for RC oscillation	Cosc	OSC RC oscillator operating mode		1000		pF
Guaranteed range of RC oscillation	fosc	OSC RC oscillator operating mode	19	38	76	kHz
External clock operating frequency	f_{CK}	OSC external clock operating mode [Figure 3]	19	38	76	kHz
External clock duty cycle	D_{CK}	OSC external clock operating mode [Figure 3]	30	50	70	%
Data setup time	tds	CL, DI [Figure 1][Figure 2]	160			ns
Data hold time	tdh	CL, DI [Figure 1][Figure 2]	160			ns
CE wait time	tcp	CE, CL [Figure 1][Figure 2]	160			ns
CE setup time	tcs	CE, CL [Figure 1][Figure 2]	160			ns
CE hold time	tch	CE, CL [Figure 1][Figure 2]	160			ns
High-level clock pulse width	tϕH	CL [Figure 1][Figure 2]	160			ns
Low-level clock pulse width	tϕL	CL [Figure 1][Figure 2]	160			ns
Rise time	tr	CE, CL, DI [Figure 1][Figure 2]		160		ns
Fall time	tf	CE, CL, DI [Figure 1][Figure 2]		160		ns
$\overline{INH}$ switching time	tc	$\overline{INH}$, CE [Figure 4] to [Figure 7]	10			μs

Electrical Characteristics for the Allowable Operating Ranges

Parameter	Symbol	Pin	Conditions	Ratings			unit
				min	typ	max	
Hysteresis	V_H	CE, CL, DI, $\overline{INH}$			$0.1V_{DD}$		V
Input high-level current	$I_{IH}1$	CE, CL, DI, $\overline{INH}$	V_I=6.0V			5.0	μA
	$I_{IH}2$	OSC	$V_I=V_{DD}$ external clock operating mode			5.0	
Input low-level current	$I_{IL}1$	CE, CL, DI, $\overline{INH}$	V_I=0V	-5.0			μA
	$I_{IL}2$	OSC	V_I=0V external clock operating mode	-5.0			
Output high-level voltage	$V_{OH}1$	S1 to S54	I_O=-20μA	V_{LCD}-0.9			V
	$V_{OH}2$	COM1, COM2	I_O=-100μA	V_{LCD}-0.9			
	$V_{OH}3$	P1 to P4	I_O=-1mA	V_{LCD}-0.9			
Output low-level voltage	$V_{OL}1$	S1 to S54	I_O=20μA			0.9	V
	$V_{OL}2$	COM1, COM2	I_O=100μA			0.9	
	$V_{OL}3$	P1 to P4	I_O=1mA			0.9	
Output middle-level voltage	V_{MID}	COM1, COM2	1/2 bias I_O=±100μA	$1/2V_{LCD}$ -0.9		$1/2V_{LCD}$ +0.9	V
Oscillator frequency	fosc	OSC	RC oscillator operating mode Rosc=39kΩ, Cosc=1000pF	30.4	38	45.6	kHz
Current drain	$I_{DD}1$	V_{DD}	Power-saving mode			10	μA
	$I_{DD}2$	V_{DD}	V_{DD}=6.0V output open fosc=38kHz		250	500	
	$I_{LCD}1$	V_{LCD}	Power-saving mode			15	
	$I_{LCD}2$	V_{LCD}	V_{LCD}=6.0V output open Static fosc=38kHz		100	200	
	$I_{LCD}3$	V_{LCD}	V_{LCD}=6.0V output open 1/2 duty fosc=38kHz		1300	2600	

1. When CL is stopped at the low level

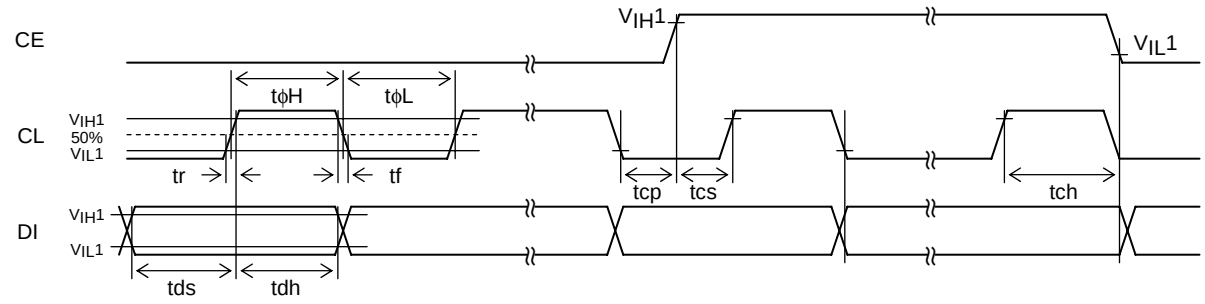

Figure 1

2. When CL is stopped at the high level

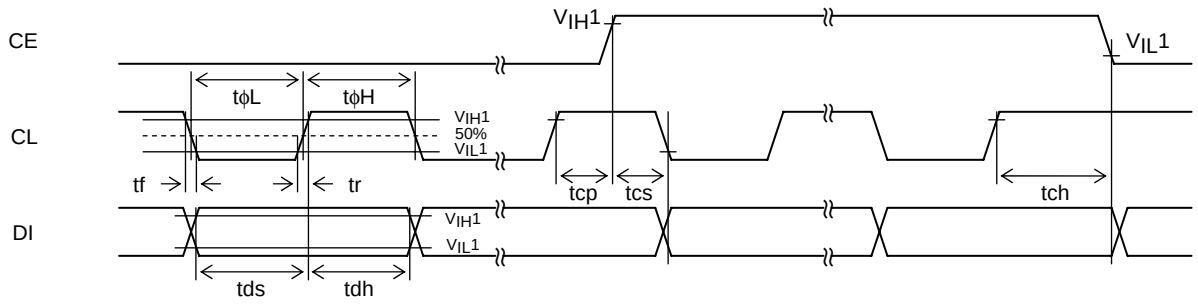

Figure 2

3. OSC pin clock timing in external clock operating mode

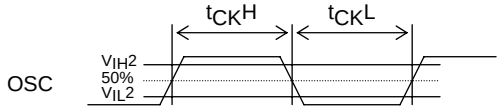

$$f_{CK}=\frac{1}{t_{CK}H+t_{CK}L}\ [kHz]$$

$$D_{CK}=\frac{t_{CK}H}{t_{CK}H+t_{CK}L}\times 100[\%]$$

Figure 3

Package Dimensions

unit:mm (typ)

3159A [LC75832E]

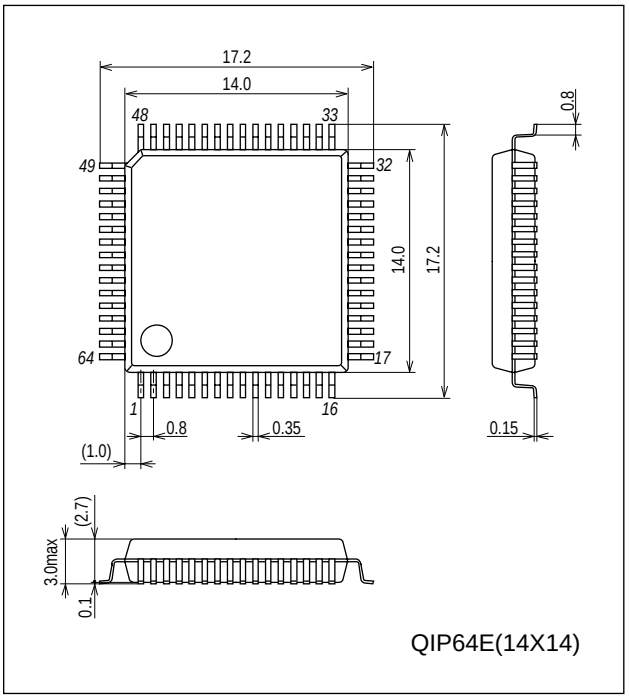

Package Dimensions

unit:mm (typ)

3190A [LC75832W]

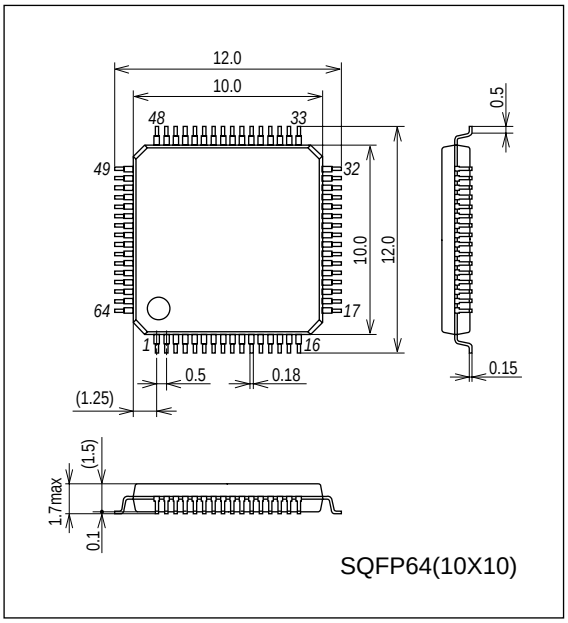

Pin Assignment

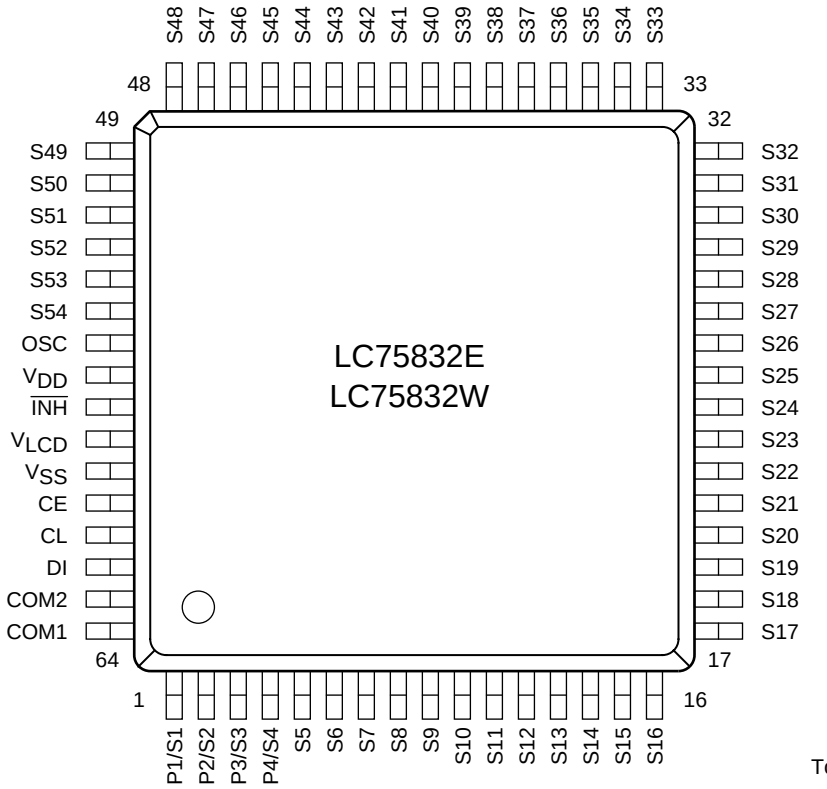

LC75832E: QIP64E(14×14)
LC75832W: SQFP64(10×10)

Block Diagram

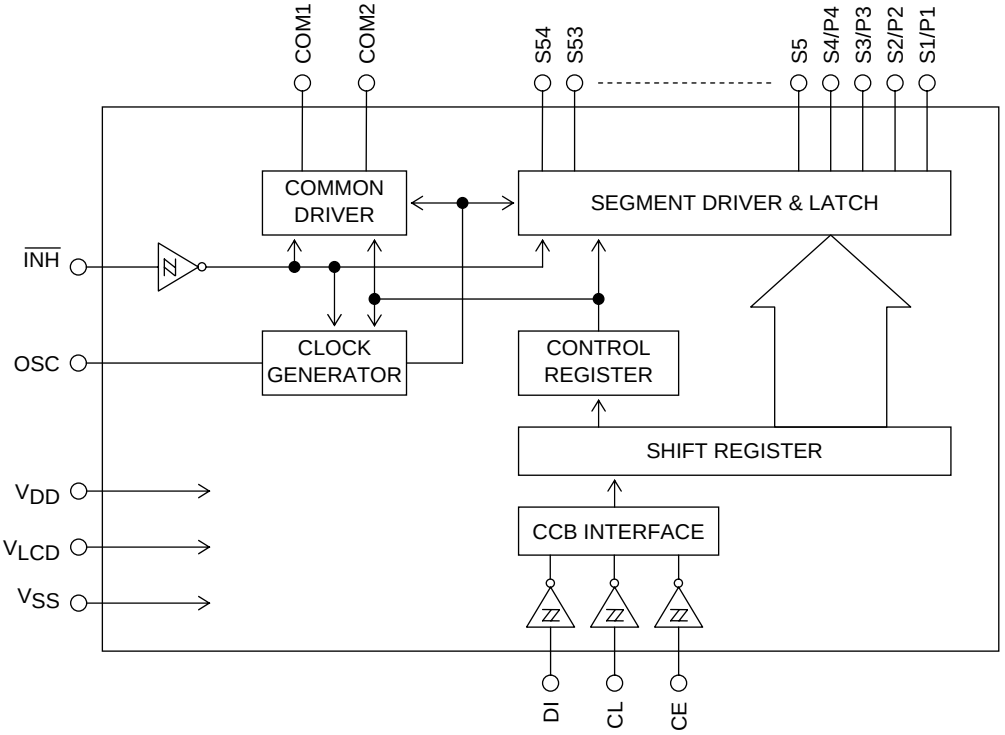

Pin Functions

Symbol	Pin No.	Function	Active	I/O	Handling when unused
S1/P1 to S4/P4 S5 to S54	1 to 4 5 to 54	Segment outputs for displaying the display data transferred by serial data input. The S1/P1 to S4/P4 pins can be used as general-purpose output ports when so set up by the control data.	-	O	OPEN
COM1 COM2	64 63	Common driver outputs. The frame frequency is fo [Hz].	-	O	OPEN
OSC	55	Oscillator connection. An oscillator circuit is formed by connecting an external resistor and capacitor to this pin. This pin can be used as the external clock input pin if external clock operating mode is selected with the control data.	-	I/O	V_{DD}
CE CL DI	60 61 62	Serial data transfer inputs. Must be connected to the controller. CE: Chip enable CL: Synchronization clock DI: Transfer data	H ↑ -	I I I	GND
$\overline{INH}$	57	Display off control input • $\overline{INH}$ = low (V_{SS}) ...Display forced off S1/P1 to S4/P4 = low (V_{SS}) (These pins are forcibly set to the segment output port function and held at the V_{SS} level.) S5 to S54 = low (V_{SS}) COM1, COM2 = low (V_{SS}) OSC = Z (high impedance) RC oscillation stopped Inhibits external clock input. • $\overline{INH}$ = high (V_{DD})...Display on RC oscillation enabled (RC oscillator operating mode) Enables external clock input (external clock operating mode). However, serial data transfer is possible when the display is forced off.	L	I	GND
V_{DD}	56	Logic block power supply. Provide a voltage in the range 2.7 to 6.0V.	-	-	-
V_{LCD}	58	LCD driver block power supply. Provide a voltage in the range 2.7 to 6.0V.	-	-	-
V_{SS}	59	Ground pin. Must be connected to ground.	-	-	-

Serial Data Transfer Formats

(1) Static drive mode

1. When CL is stopped at the low level

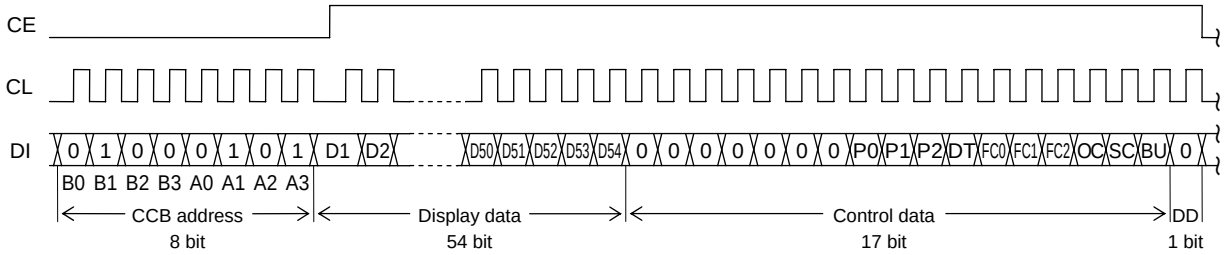

2. When CL is stopped at the high level

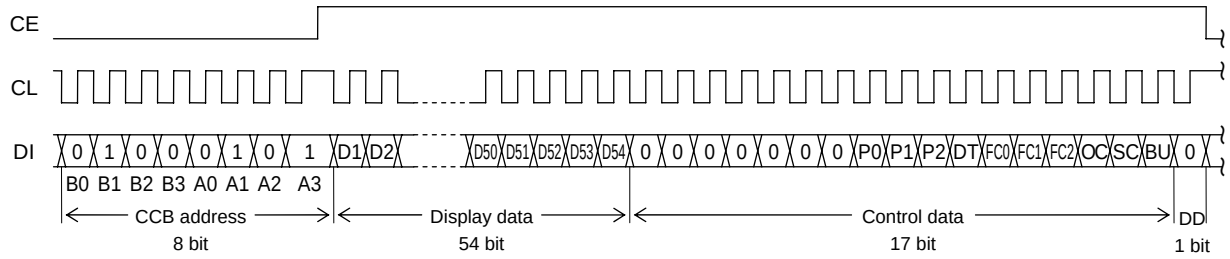

Note: DD is the direction data.

- CCB address ..... "A2H"
- D1 to D54 ..... Display data
- P0 to P2 ..... Segment output port/general-purpose output port switching control data
- DT ..... Static drive or 1/2 duty drive switching control data
- FC0 to FC2 ..... Common/segment output waveform frame frequency control data
- OC ..... RC oscillator operating mode/external clock operating mode switching control data
- SC ..... Segments on/off control data
- BU ..... Normal mode/power-saving mode control data

(2) 1/2 duty drive mode

1. When CL is stopped at the low level

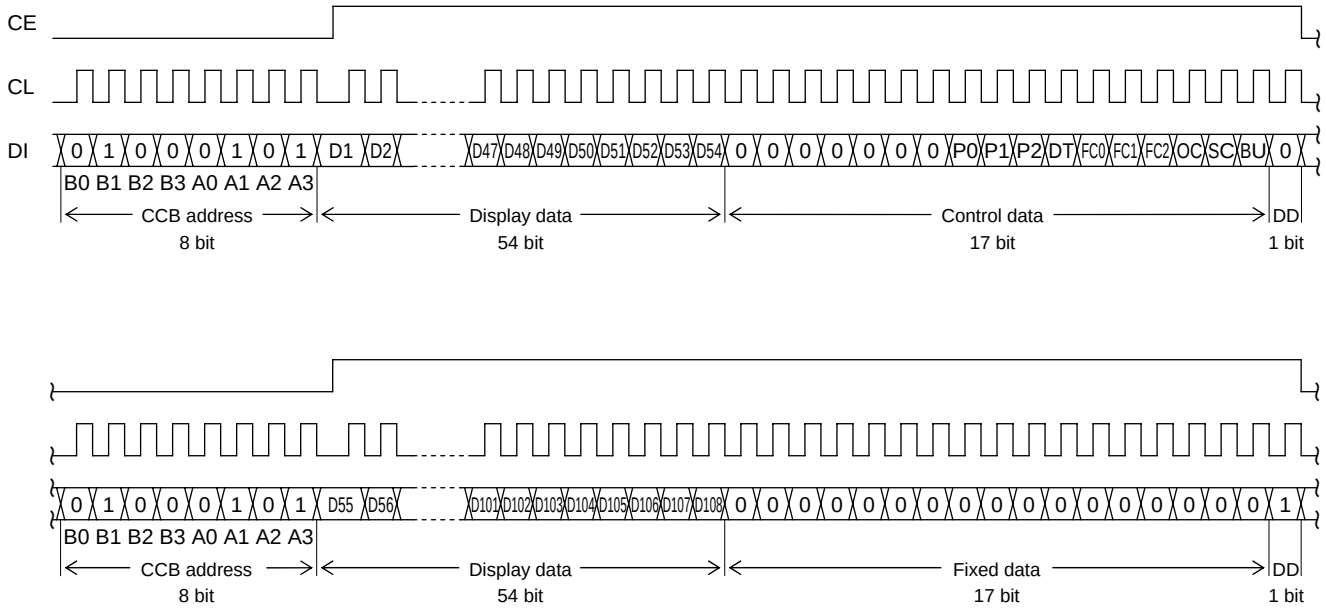

2. When CL is stopped at the high level

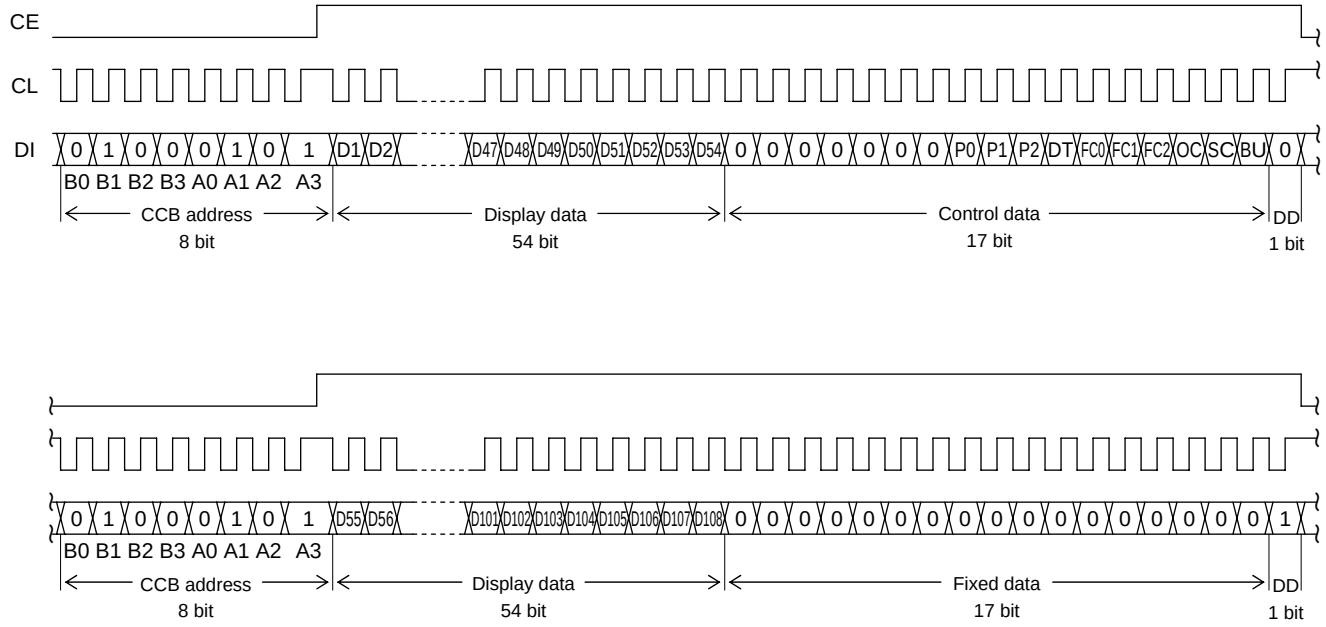

Note: DD is the direction data.

- CCB address ..... "A2H"
- D1 to D108 ..... Display data
- P0 to P2 ..... Segment output port/general-purpose output port switching control data
- DT ..... Static drive or 1/2 duty drive switching control data
- FC0 to FC2 ..... Common/segment output waveform frame frequency control data
- OC ..... RC oscillator operating mode/external clock operating mode switching control data
- SC ..... Segments on/off control data
- BU ..... Normal mode/power-saving mode control data

Serial Data Transfer Formats (When in 822 mode data transfer)

(1) Static drive mode (When in 822 mode data transfer)

1. When CL is stopped at the low level

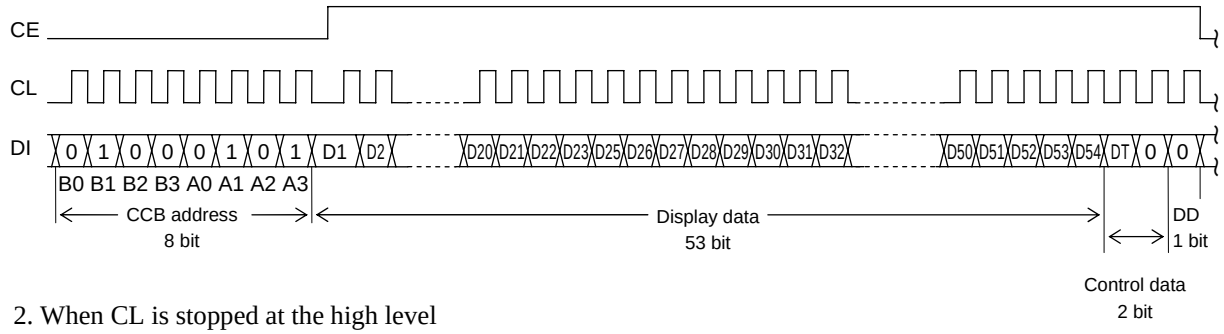

2. When CL is stopped at the high level

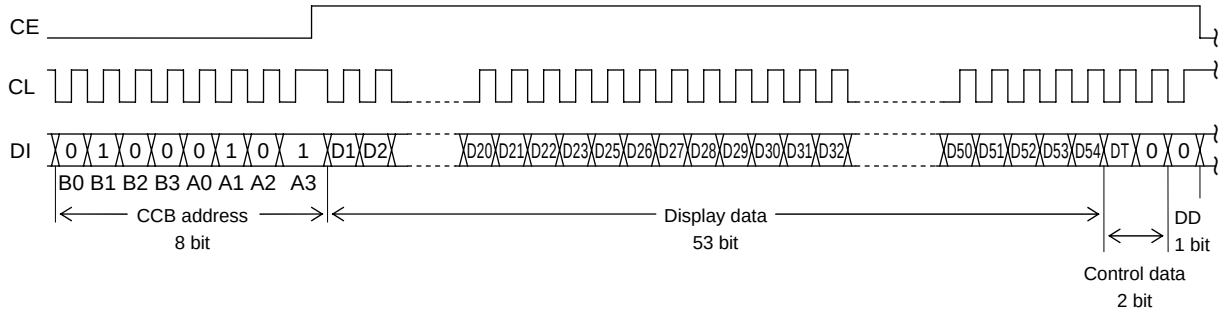

Note: DD is the direction data.

- CCB address …….. "A2H"
- D1 to D23, D25 to D54 …. Display data
- DT …….. Static drive or 1/2 duty drive switching control data

(2) 1/2 duty drive mode (When in 822 mode data transfer)

1. When CL is stopped at the low level

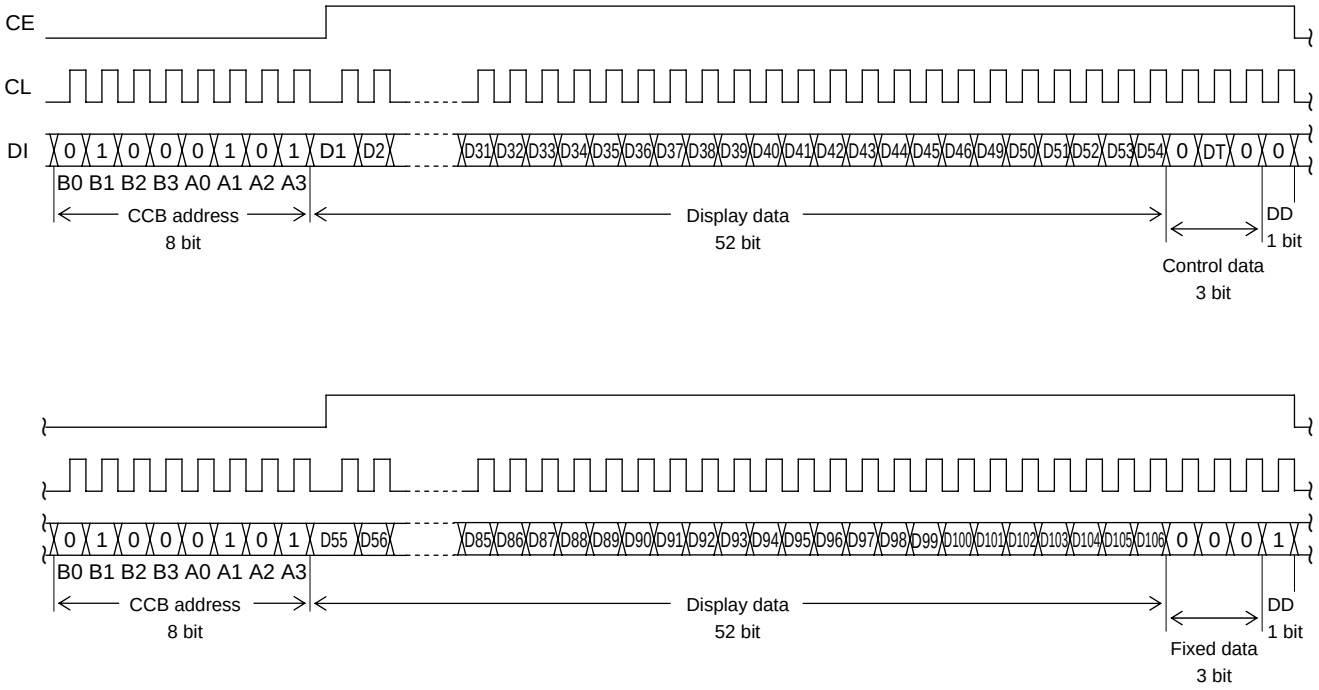

2. When CL is stopped at the high level

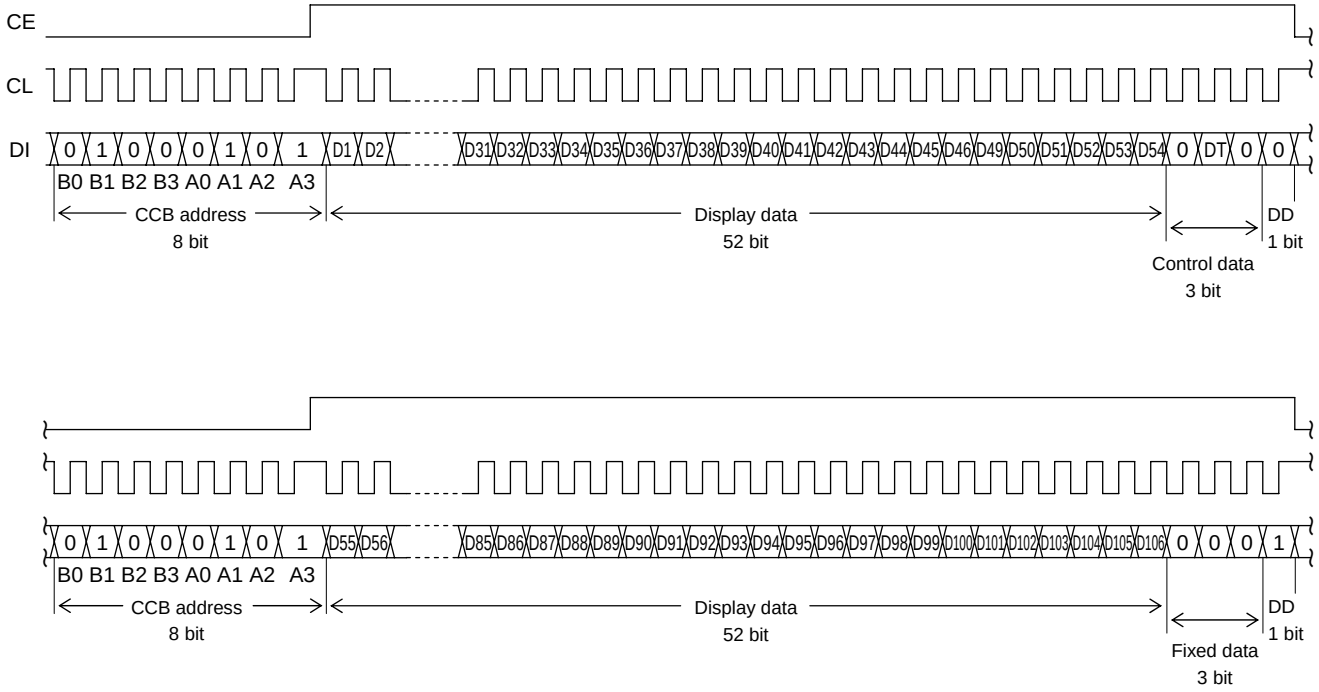

Note: DD is the direction data.

- CCB address ……..... "A2H"
- D1 to D46, D49 to D106 …. Display data
- DT ……..... Static drive or 1/2 duty drive switching control data

Serial Data Transfer Examples

(1) Static drive mode

The serial data shown in the figure below must be sent.

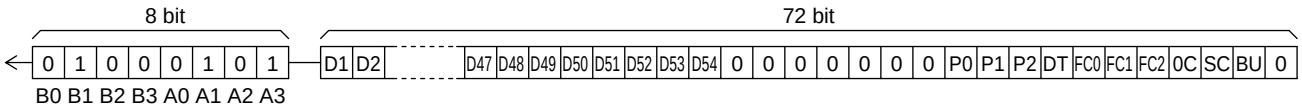

(2) 1/2 duty drive mode

• When 55 or more segments are used

160 bits of serial data (including CCB address bits) must be sent.

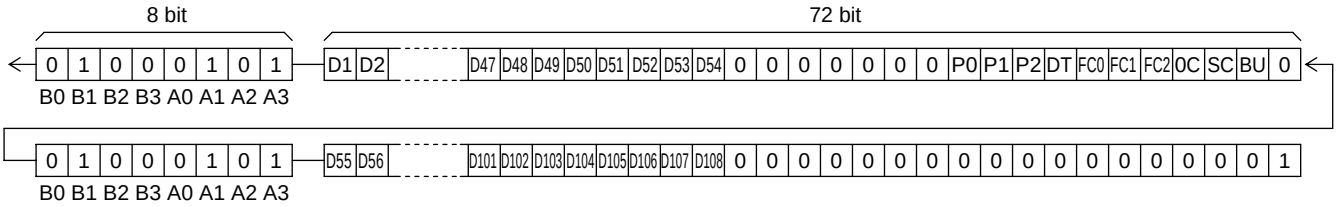

• When fewer than 55 segments are used

The serial data shown below (the D1 to D54 display data and the control data) must always be sent.

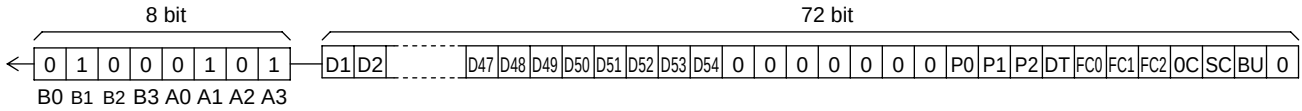

Serial Data Transfer Example (When in 822 mode data transfer)

(1) Static drive mode

The serial data shown in the figure below must be sent.

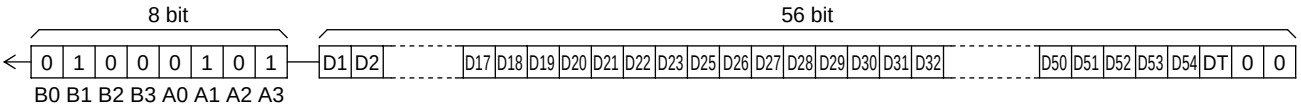

(2) 1/2 duty drive mode

• When 53 or more segments are used

128 bits of serial data (including CCB address bits) must be sent.

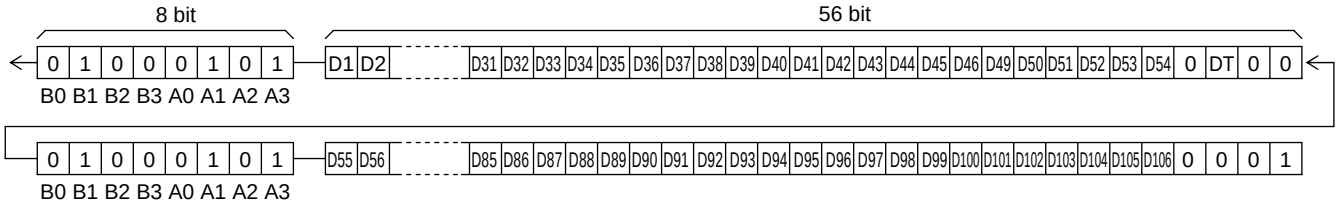

• When fewer than 53 segments are used

The serial data shown in the figure below (the D1 to D46 and D49 to D54 display data, and the control data) must be sent.

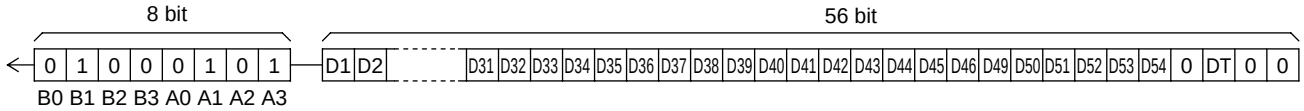

Control Data Functions

1. P0 to P2: Segment output port/general-purpose output port switching control data

These control data bits switch the segment output port/general-purpose output port functions of the S1/P1 to S4/P4 output pins.

However, segment output port is forcibly selected when in 822 mode data transfer.

Control data			Output pin state			
P0	P1	P2	S1/P1	S2/P2	S3/P3	S4/P4
0	0	0	S1	S2	S3	S4
0	0	1	P1	S2	S3	S4
0	1	0	P1	P2	S3	S4
0	1	1	P1	P2	P3	S4
1	0	0	P1	P2	P3	P4

Note: Sn (n = 1 to 4): Segment output ports
Pn (n = 1 to 4): General-purpose output ports

Note that when the general-purpose output port function is selected, the correspondence between the output pins and the display data will be that shown in the table.

Output pin	Corresponding display data	
	Static drive mode	1/2 duty drive mode
S1/P1	D1	D1
S2/P2	D2	D3
S3/P3	D3	D5
S4/P4	D4	D7

For example, if the general-purpose output port function is selected for the S4/P4 output pin in 1/2 duty drive mode, it will output a high level (V_{LCD}) when display data D7 is 1, and a low level (V_{SS}) when D7 is 0.

2. DT: Static drive mode/1/2 duty drive mode switching control data

This control data bit selects either static drive mode or 1/2 duty drive mode.

DT	Duty drive mode	Output pin state (COM2)
0	Static drive mode	V_{SS} level
1	1/2 duty drive mode	COM2

3. FC0 to FC2: Common/segment output waveform frame frequency control data

These control data bits set the frame frequency of the common and segment output waveforms.

However, fo=fosc/384 is forcibly selected when in 822 mode data transfer.

Control data			Frame frequency fo [Hz]
FC0	FC1	FC2	
1	1	0	fosc/768, f_{CK}/768
1	1	1	fosc/576, f_{CK}/576
0	0	0	fosc/384, f_{CK}/384
0	0	1	fosc/288, f_{CK}/288
0	1	0	fosc/192, f_{CK}/192

4. OC: RC oscillator operating mode/external clock operating mode switching control data.

This control data bit switches the OSC pin function
(either RC oscillator operating mode or external clock operating mode).

However RC oscillator operating mode is forcibly selected when in 822 mode data transfer.

OC	OSC pin function
0	RC oscillator operating mode
1	External clock operating mode

Note: An external resistor, Rosc, and an external capacitor, Cosc, must be connected to the OSC pin if RC oscillator operating mode is selected.

5. SC: Segment on/off control data

This control data bit controls the on/off state of the segments.

However, the segment on state is forcibly selected when in 822 mode data transfer.

SC	Display state
0	On
1	Off

Note that when the segments are turned off by setting SC to 1, the segments are turned off by outputting segment off waveforms from the segment output pins.

6. BU: Normal mode/power-saving mode control data

This control data bit selects either normal mode or power-saving mode.

However, the normal mode is forcibly selected when in 822 mode data transfer.

BU	Mode
0	Normal mode
1	Power-saving mode. (In RC oscillator operating mode (OC = 0), the OSC pin oscillator is stopped, and in external clock operating mode (OC = 1), acceptance of the external clock is stopped. In this mode the common and segment output pins go to the V_{SS} levels. However, S1/P1 to S4/P4 output pins that are set to be general-purpose output ports by the control data P0 to P2 can be used as general-purpose output ports.)

Display Data and Output Pin Correspondence

(1) Static drive mode

Output pin	COM1
S1/P1	D1
S2/P2	D2
S3/P3	D3
S4/P4	D4
S5	D5
S6	D6
S7	D7
S8	D8
S9	D9
S10	D10
S11	D11
S12	D12
S13	D13
S14	D14
S15	D15
S16	D16
S17	D17
S18	D18
S19	D19
S20	D20

Output pin	COM1
S21	D21
S22	D22
S23	D23
S24	D24
S25	D25
S26	D26
S27	D27
S28	D28
S29	D29
S30	D30
S31	D31
S32	D32
S33	D33
S34	D34
S35	D35
S36	D36
S37	D37
S38	D38
S39	D39
S40	D40

Output pin	COM1
S41	D41
S42	D42
S43	D43
S44	D44
S45	D45
S46	D46
S47	D47
S48	D48
S49	D49
S50	D50
S51	D51
S52	D52
S53	D53
S54	D54

Note 1: This applies to the case where the S1/P1 to S4/P4 output pins are set to be segment output ports.

Note 2: The S24 output pin outputs a low level (V_{SS} level) when in 822 mode data transfer.

For example, the table below lists the output states for the S21 output pin.

Display data D21	Output pin (S21) state
0	The LCD segment corresponding to COM1 is off
1	The LCD segment corresponding to COM1 is on

(2)1/2 duty drive mode

Output pin	COM1	COM2
S1/P1	D1	D2
S2/P2	D3	D4
S3/P3	D5	D6
S4/P4	D7	D8
S5	D9	D10
S6	D11	D12
S7	D13	D14
S8	D15	D16
S9	D17	D18
S10	D19	D20
S11	D21	D22
S12	D23	D24
S13	D25	D26
S14	D27	D28
S15	D29	D30
S16	D31	D32
S17	D33	D34
S18	D35	D36
S19	D37	D38
S20	D39	D40

Output pin	COM1	COM2
S21	D41	D42
S22	D43	D44
S23	D45	D46
S24	D47	D48
S25	D49	D50
S26	D51	D52
S27	D53	D54
S28	D55	D56
S29	D57	D58
S30	D59	D60
S31	D61	D62
S32	D63	D64
S33	D65	D66
S34	D67	D68
S35	D69	D70
S36	D71	D72
S37	D73	D74
S38	D75	D76
S39	D77	D78
S40	D79	D80

Output pin	COM1	COM2
S41	D81	D82
S42	D83	D84
S43	D85	D86
S44	D87	D88
S45	D89	D90
S46	D91	D92
S47	D93	D94
S48	D95	D96
S49	D97	D98
S50	D99	D100
S51	D101	D102
S52	D103	D104
S53	D105	D106
S54	D107	D108

Note 1: Applies when the S1/P1 to S4/P4 output pins are to their segment output function.
Note 2: The S24 output pin outputs a low level (V_{SS} level) when in 822 mode data transfer.
Note 3: The S54 output pin outputs an all-segment-on waveform when in 822 mode data transfer.

For example, the table below lists the output states for the S21 output pin.

Display data		Output pin (S21) state
D41	D42	
0	0	The LCD segments corresponding to COM1 and COM2 are off
0	1	The LCD segment corresponding to COM2 is on
1	0	The LCD segment corresponding to COM1 is on
1	1	The LCD segments corresponding to COM1 and COM2 are on

Output Waveforms (Static drive mode)

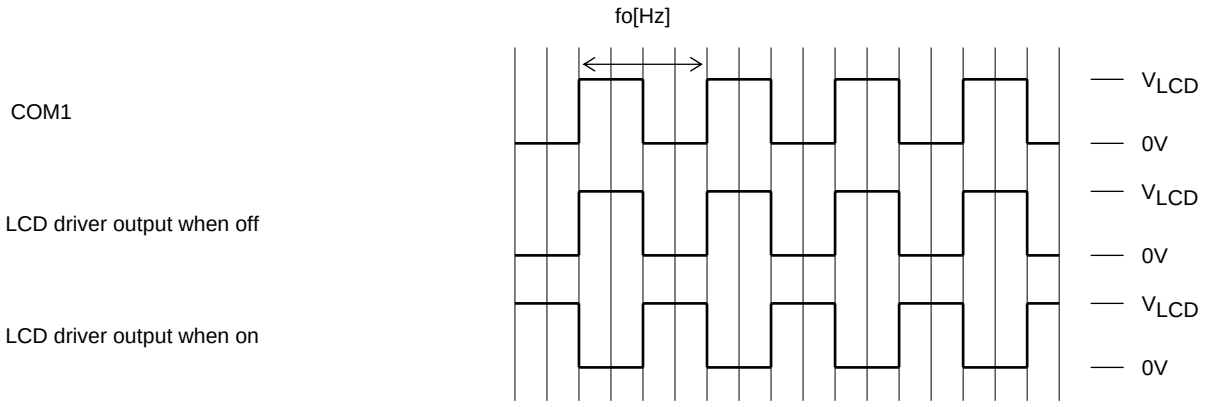

Output Waveforms (1/2 duty, 1/2 bias drive mode)

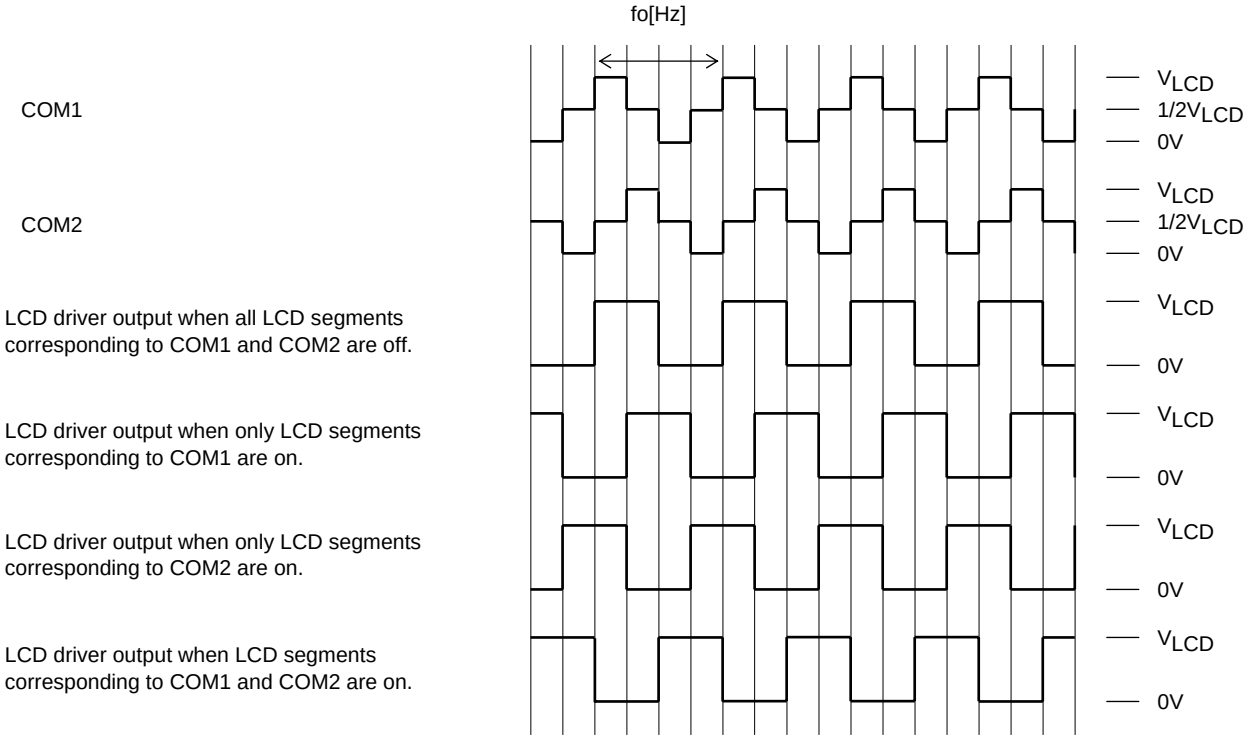

Control data			Frame frequency fo [Hz]
FC0	FC1	FC2	
1	1	0	fosc/768, f_{CK}/768
1	1	1	fosc/576, f_{CK}/576
0	0	0	fosc/384, f_{CK}/384
0	0	1	fosc/288, f_{CK}/288
0	1	0	fosc/192, f_{CK}/192

Display Control and the $\overline{\text{INH}}$ Pin

Since the IC's internal data (the display data D1 to D54 and the control data when in static drive mode, and the display data D1 to D108 and the control data when in 1/2 duty drive mode) is undefined when power is first applied, applications should set the $\overline{\text{INH}}$ pin low at the same time as power is applied to turn off the display (setting S1/P1 to S4/P4 and S5 to S54, COM1, and COM2 to the V_{SS} level) and during this period send serial data from the controller. The controller should then set the $\overline{\text{INH}}$ pin high after the data transfer has completed. This procedure prevents unnecessary display at power on (See Figures 4 to 7).

Notes on the Power On/Off Sequences

Applications should observe the following sequence when turning the LC75832E and LC75832W power on and off. (See Figures 4 to 7):
- At power on: Logic block power supply (V_{DD}) on → LCD driver block power supply (V_{LCD}) on
- At power off: LCD driver block power supply (V_{LCD}) off → Logic block power supply (V_{DD}) off

However, if the logic and LCD driver block use a shared power supply, then power supplies can be turned on and off at the same time.

• Static drive mode

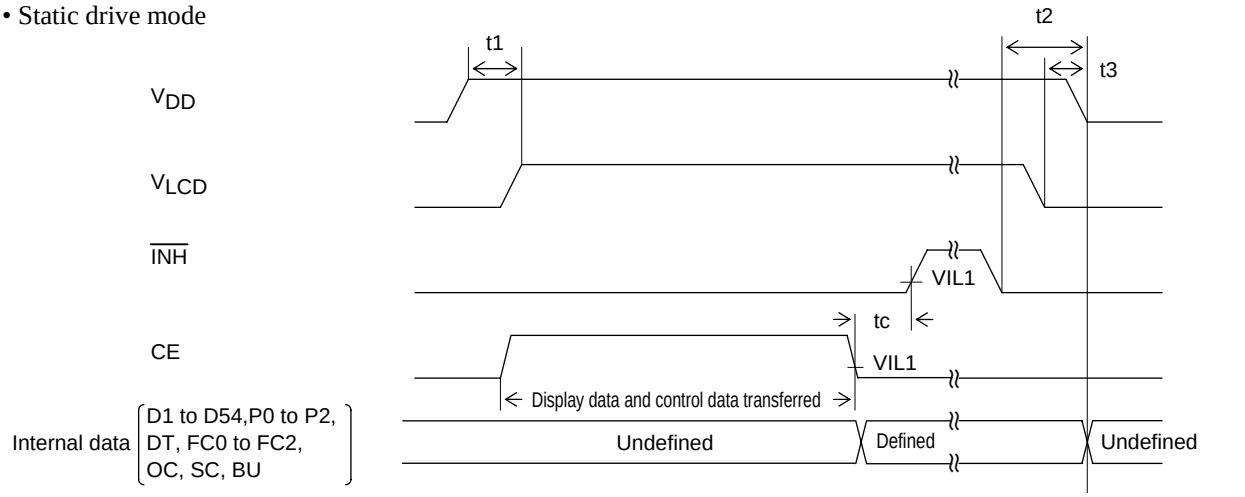

Notes: t1≥0
t2>0
t3≥0 (t2>t3)
tc ··· 10µs min

Figure 4

• Static drive mode (when in 822 mode data transfer)

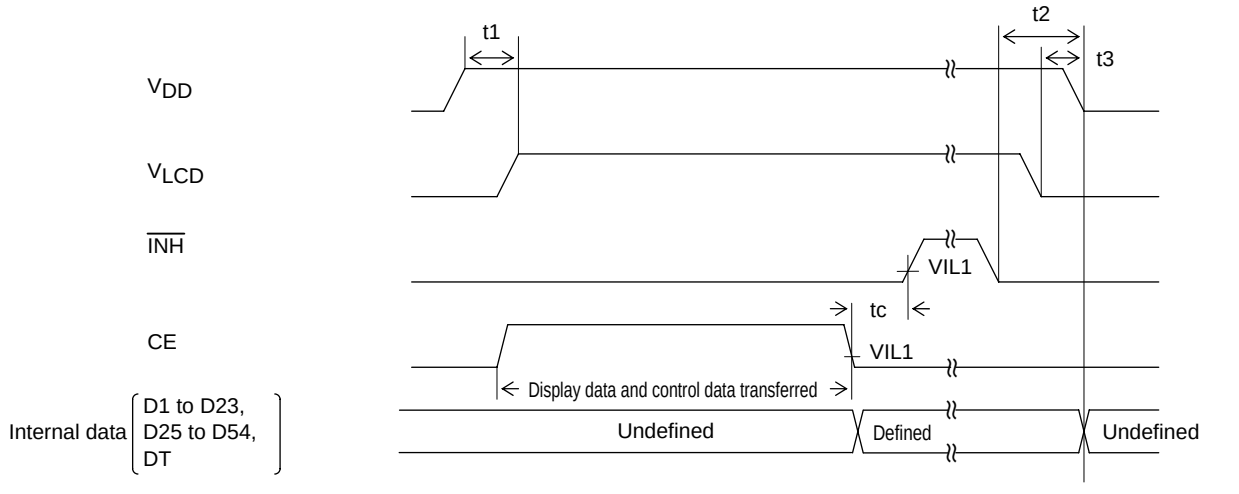

Notes: t1≥0
t2>0
t3≥0 (t2>t3)
tc ··· 10µs min

Figure 5

• 1/2 duty drive mode

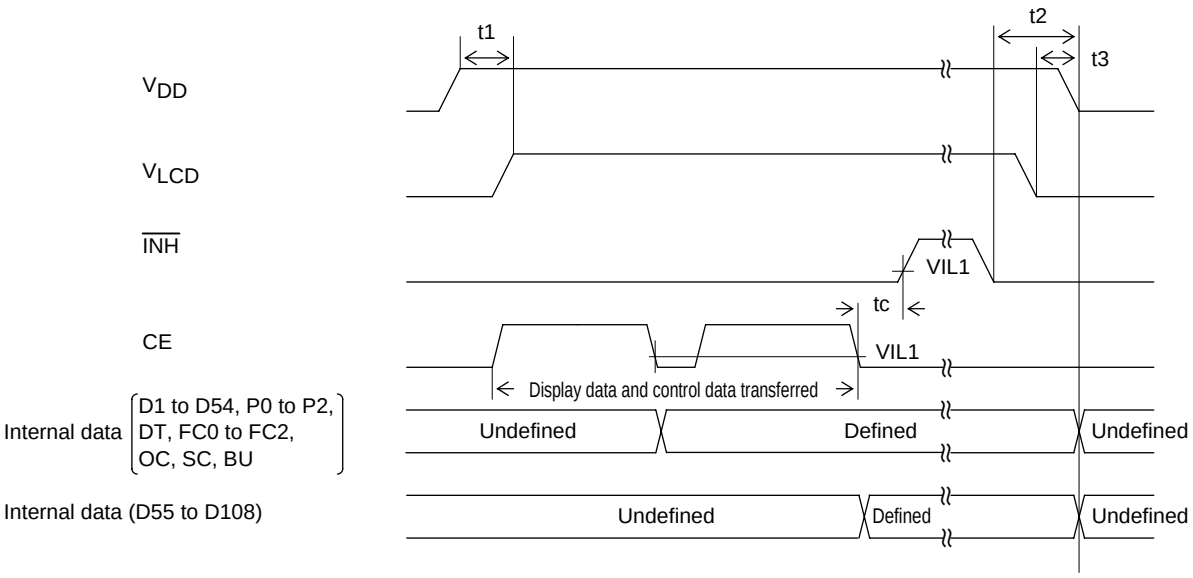

Notes: t1≥0
t2>0
t3≥0 (t2>t3)
tc ··· 10µs min

Figure 6

1/2 duty drive mode (when in 822 mode data transfer)

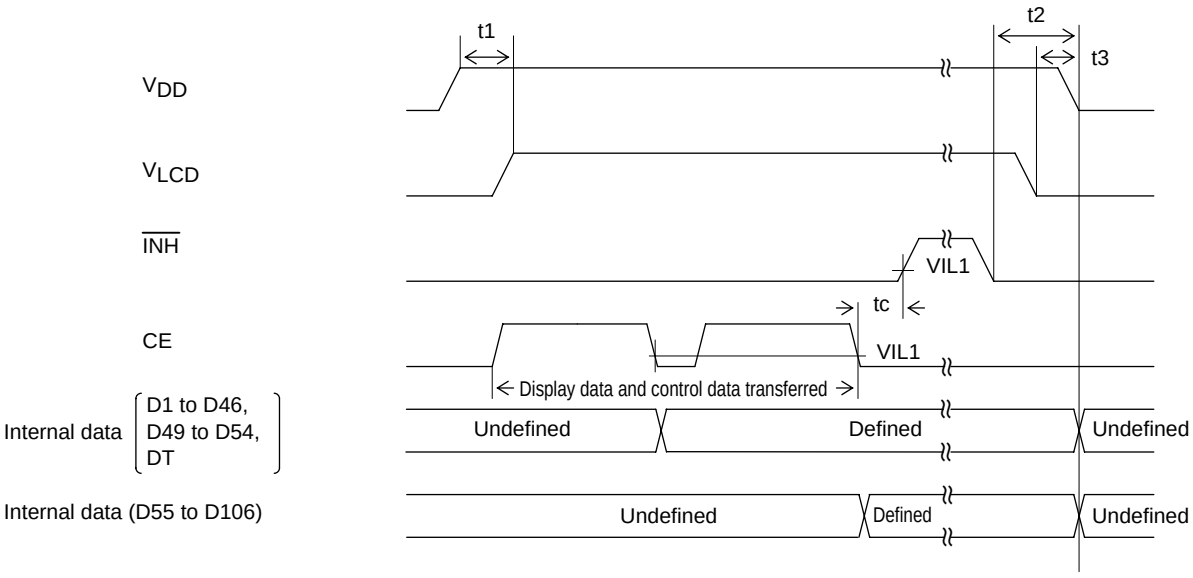

Notes: t1≥0
t2>0
t3≥0 (t2>t3)
tc ··· 10µs min

Figure 7

Notes on Controller Transfer of Display Data

Since the LC75832E/W transfer the display data (D1 to D108) in two separate transfer operations in 1/2 duty drive mode, we recommend that applications make a point of completing all of the display data transfer within a period of less than 30 ms to prevent observable degradation of display quality.

OSC Pin Peripheral Circuit

(1) RC oscillator operating mode (control data OC = 0)
An external resistor, Rosc, and an external capacitor, Cosc, must be connected between the OSC pin and GND if RC oscillator operating mode is selected.

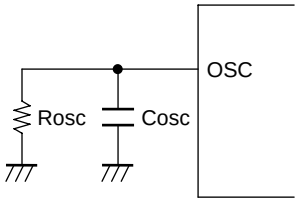

(2) External clock operating mode (control data OC = 1)
When the external clock operating mode is selected, insert a current protection resistor Rg (4.7 to 47kΩ) between the OSC pin and external clock output pin (external oscillator). Determine the value of the resistance according to the allowable current value at the external clock output pin. Also make sure that the waveform of the external clock is not heavily distorted.

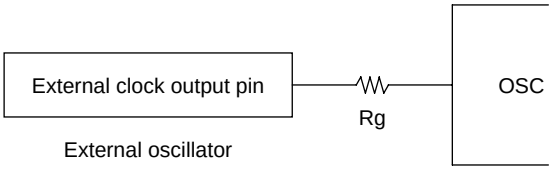

Note: Allowable current value at external clock output pin > $\frac{V_{DD}}{Rg}$

Sample Application Circuit 1

Static drive mode

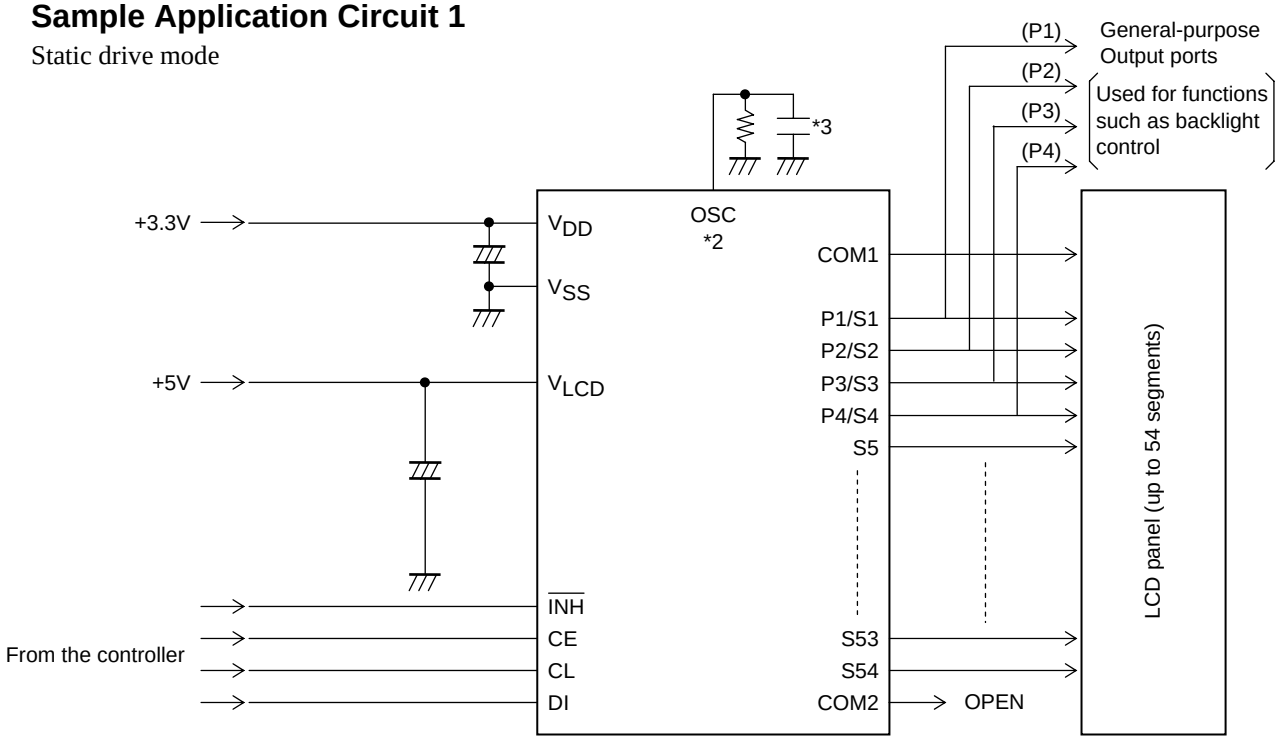

*2: In RC oscillator operating mode, an external resistor, Rosc, and an external capacitor, Cosc, must be connected between the OSC pin and ground. If external clock operating mode is selected, a current protection resistor, Rg (4.7 to 47 kΩ), must be inserted between the external clock output pin (on the external oscillator) and the OSC pin. (See the "OSC Pin Peripheral Circuit" section.)

*3: When a capacitor except the recommended external capacitance (Cosc = 1000pF) is connected to the OSC pin, it should be in the range 220 to 2200pF.

Sample Application Circuit 2

1/2 duty drive mode

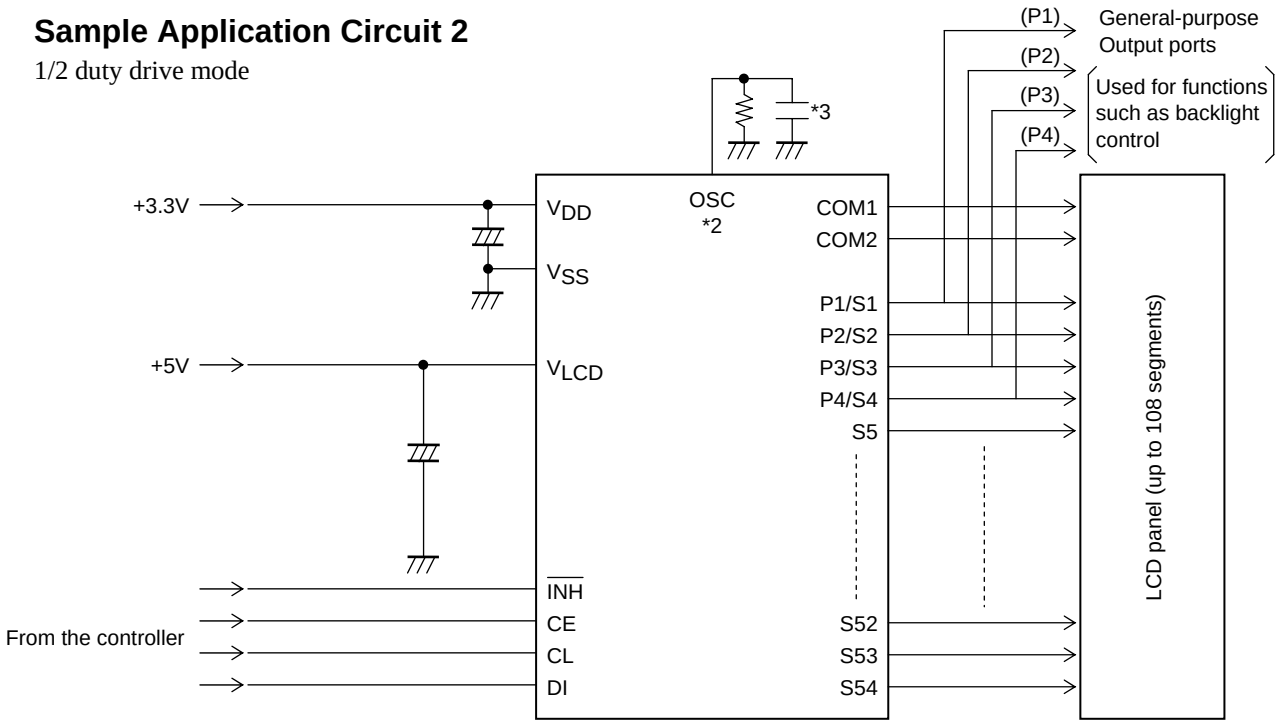

*2: In RC oscillator operating mode, an external resistor, Rosc, and an external capacitor, Cosc, must be connected between the OSC pin and ground. If external clock operating mode is selected, a current protection resistor, Rg (4.7 to 47 kΩ), must be inserted between the external clock output pin (on the external oscillator) and the OSC pin. (See the "OSC Pin Peripheral Circuit" section.)

*3: When a capacitor except the recommended external capacitance (Cosc = 1000pF) is connected to the OSC pin, it should be in the range 220 to 2200pF.

ON Semiconductor and the ON logo are registered trademarks of Semiconductor Components Industries, LLC (SCILLC). SCILLC owns the rights to a number of patents, trademarks, copyrights, trade secrets, and other intellectual property. A listing of SCILLC's product/patent coverage may be accessed at www.onsemi.com/site/pdf/Patent-Marking.pdf. SCILLC reserves the right to make changes without further notice to any products herein. SCILLC makes no warranty, representation or guarantee regarding the suitability of its products for any particular purpose, nor does SCILLC assume any liability arising out of the application or use of any product or circuit, and specifically disclaims any and all liability, including without limitation special, consequential or incidental damages. "Typical" parameters which may be provided in SCILLC data sheets and/or specifications can and do vary in different applications and actual performance may vary over time. All operating parameters, including "Typicals" must be validated for each customer application by customer's technical experts. SCILLC does not convey any license under its patent rights nor the rights of others. SCILLC products are not designed, intended, or authorized for use as components in systems intended for surgical implant into the body, or other applications intended to support or sustain life, or for any other application in which the failure of the SCILLC product could create a situation where personal injury or death may occur. Should Buyer purchase or use SCILLC products for any such unintended or unauthorized application, Buyer shall indemnify and hold SCILLC and its officers, employees, subsidiaries, affiliates, and distributors harmless against all claims, costs, damages, and expenses, and reasonable attorney fees arising out of, directly or indirectly, any claim of personal injury or death associated with such unintended or unauthorized use, even if such claim alleges that SCILLC was negligent regarding the design or manufacture of the part. SCILLC is an Equal Opportunity/Affirmative Action Employer. This literature is subject to all applicable copyright laws and is not for resale in any manner.