BROADCOM®

SELECTION GUIDE

LED Solutions

High Brightness LEDs, Indicators and Displays

broadcom.com

Broadcom is one of the largest producers of visible light-emitting diodes in the world.

Broadcom offers “one-stop shopping” with its wide array of LED (Light Emitting Diodes) Solutions. With our large manufacturing base and many years of experience from our HP and Agilent days, we are one of the largest producersof visible LEDs in the world and ships billions of products annually.

Broadcom employs the latest in material and process technology to produce superior LEDs. Our highly acclaimed AlInGaP (aluminium indium gallium phosphide) LED material offers high brightness and stable light output over thousands of hours with excellent meantime-before-failure (MTBF). With our cutting edge LED technology, our solution also offers dazzling blue and green colors with InGaN (indium gallium nitride) material, and very cost-effective GaP (gallium phosphide) based technology, perfect for low to moderate light output. Broadcoms’ LEDs create brilliant lights with rich life-like colors for our customers’ applications which are longer lasting and at a globally competitive price. They are suitable for almost any applications that customers need today with wide selection of viewing and package options.

Key products range from high brightness and high power LEDs, surface mount lamps, PLCC surface mount LEDs, to standard brightness through-hole lamps, chip LEDs, flash LEDs and various LED displays. These LED Solutions address a wide range of markets, including electronic sign and signal, automotive, solid-state lighting, consumer electronics, home and mobile appliances.

For virtually all established and emerging applications, Broadcom has the right LED Solutions to meet your design requirements.

High Brightness LEDs

3 High Brightness Through-hole Lamps

15 High Brightness SMT Lamps

19 Surface Mount

41 Mini PLCC-2 Surface Mount LEDs

44 Envisium Surface Mount Power PLCC-4 LEDs

47 High Power LEDs

52 Moonstone® High Power LEDs

55 1W 3030 High Power LEDs

57 1W Tri-color High Power LEDs

58 3W Tri-color High Power LEDs

LED Indicators and Displays

63 Standard Though-hole Lamps

70 Subminiature Lamps

74 Surface Mount Chip LEDs

87 Auto Focus Auxiliary Flash LEDs

90 Seven-Segment Displays

118 Light Bars and Bar Graph Arrays

122 Smart Displays

High Brightness Through-hole Lamps

Description

Broadcom offers two types of technology based LEDs AlInGaP and InGaN which are suitable for high brightness needs. Through Hole LEDs are offered in 4 mm and 5 mm package.

These devices are casted using advance optical grade epoxy, which provides superior high temperature performance and excellent moisture resistance.

These High Brightness Through Hole LEDs are suitable for application in traffic management, solar powered variable message signs and commercial outdoor advertising video displays.

Applications

- Electronic signs and signals
  - Traffic signal
  - Variable message sign
  - Pedestrian signal
  - Work zone warning
  - Lights
- Solar powered sign
- Commercial Outdoor
- Advertising
  - Full color sign
  - Mono color sign

Benefits

- Excellent product quality and reliability
- Wide range of products
- Competitive pricing
- Wide operating temperature range
- Low power consumption
  - High efficiency, low drive currents and low driving voltages required
- Colors available for AlInGaP LED lamps:
  - Red (626nm), Red Orange (615nm), Orange (605nm) and Amber (590nm)
- Colors available for InGaN LED lamps:
  - Blue (470nm), Green (525nm)
- Packaging options
  - Bulk
  - Ammopack

High Brightness 5mm Round LED Lamp

Part Number	Color	Dominant Wavelength (nm)	Viewing Angle (°)	Standoff (Yes/NO)	Luminous Intensity (mcd) @ 20 mA		Package Drawing
					Min.	Max.	
5 mm Round LED Lamps							
8° Viewing Angle							
HLMP-EG08-X1000	Red	626	8	No	7200	21000	A
HLMP-EG10-X1000	Red	626	8	Yes	7200	21000	B
HLMP-EH08-Y2000	Red-Orange	615	8	No	9300	27000	A
HLMP-EH10-Y2000	Red-Orange	615	8	Yes	9300	27000	B
HLMP-EJ08-X1000	Orange	605	8	No	7200	21000	A
HLMP-EJ10-X1000	Orange	605	8	Yes	7200	21000	B
HLMP-EL08-X1000	Amber	590	8	No	7200	21000	A
HLMP-EL10-X1000	Amber	590	8	Yes	7200	21000	B
5mm Round LED Lamps							
15° Viewing Angle							
HLMP-EG1G-Y10DD	Red	626	15	No	9300	21000	A
HLMP-EG1H-Y10DD	Red	626	15	Yes	9300	21000	B
HLMP-EG1A-Z10DD	Red	626	15	No	12000	21000	A
HLMP-EG1B-Z10DD	Red	626	15	Yes	12000	21000	B
HLMP-EG1S-Z20DD	Red	621	15	No	12000	27000	A
HLMP-EG1T-Z20DD	Red	621	15	Yes	12000	27000	B
HLMP-EH1A-Z10DD	Red-Orange	615	15	No	12000	21000	A
HLMP-EH1B-Z10DD	Red-Orange	615	15	Yes	12000	21000	B
HLMP-EL1G-Y10DD	Amber	590	15	No	9300	21000	A
HLMP-EL1H-Y10DD	Amber	590	15	Yes	9300	21000	B
HLMP-EL1A-Z1KDD	Amber	590	15	No	12000	21000	A
HLMP-EL1B-Z1KDD	Amber	590	15	Yes	12000	21000	B
HLMP-EL1S-Z20DD	Amber	590	15	No	12000	27000	A
HLMP-EL1S-Z2KDD	Amber	590	15	No	12000	27000	A
HLMP-EL1S-Z2LDD	Amber	590	15	No	12000	27000	A
HLMP-EL1T-Z20DD	Amber	590	15	Yes	12000	27000	B
HLMP-EL1T-Z2KDD	Amber	590	15	Yes	12000	27000	B
HLMP-EL1T-Z2LDD	Amber	590	15	Yes	12000	27000	B
HLMP-CB1G-XZ0DD	Blue	470	15	No	7200	16000	C
HLMP-CB1H-XZ0DD	Blue	470	15	Yes	7200	16000	D
HLMP-CB1A-XY0DD	Blue	470	15	No	7200	12000	C
HLMP-CB1A-XYBDD	Blue	470	15	No	7200	12000	C
HLMP-CB1A-XYCDD	Blue	470	15	No	7200	12000	C
HLMP-CB1B-XY0DD	Blue	470	15	Yes	7200	12000	D
HLMP-CB1B-XYBDD	Blue	470	15	Yes	7200	12000	D
HLMP-CB1B-XYCDD	Blue	470	15	Yes	7200	12000	D
HLMP-CM1G-350DD	Green	525	15	No	27000	59000	C
HLMP-CM1H-350DD	Green	525	15	Yes	27000	59000	D
HLMP-CM1A-560DD	Green	525	15	No	45000	76000	C
HLMP-CM1B-560DD	Green	525	15	Yes	45000	76000	D

High Brightness 5mm Round LED Lamp

Part Number	Color	Dominant Wavelength (nm)	Viewing Angle (°)	Standoff (Yes/NO)	Luminous Intensity (mcd) @ 20 mA		Package Drawing
					Min.	Max.	
15° Viewing Angle							
HLMP-CE17-240DD	Cyan	505	15	No	21000	45000	C
HLMP-CE17-24CDD	Cyan	505	15	No	21000	45000	C
HLMP-CE17-24QDD	Cyan	505	15	No	21000	45000	C
HLMP-CE18-240DD	Cyan	505	15	Yes	21000	45000	D
HLMP-CE18-24CDD	Cyan	505	15	Yes	21000	45000	D
HLMP-CE18-24QDD	Cyan	505	15	Yes	21000	45000	D
23° Viewing Angle							
HLMP-EG2G-XZ0DD	Red	626	23	No	7200	16000	A
HLMP-EG2H-XZ0DD	Red	626	23	Yes	7200	16000	B
HLMP-EG2S-XZ0DD	Red	621	23	No	7200	16000	A
HLMP-EG2T-XZ0DD	Red	621	23	Yes	7200	16000	B
HLMP-EG2U-Z10DD	Red	622	23	No	12000	21000	A
HLMP-EG2V-Z10DD	Red	622	23	Yes	12000	21000	B
HLMP-EG2A-XY0DD	Red	626	23	No	7200	12000	A
HLMP-EG2B-XY0DD	Red	626	23	Yes	7200	12000	B
HLMP-EH2A-YZ0DD	Red-Orange	615	23	No	9300	12000	A
HLMP-EH2B-YZ0DD	Red-Orange	615	23	Yes	9300	12000	B
HLMP-EL2G-WY0DD	Amber	590	23	No	5500	12000	A
HLMP-EL2H-WY0DD	Amber	590	23	Yes	5500	12000	B
HLMP-EL2A-YZKDD	Amber	590	23	No	9300	16000	A
HLMP-EL2B-XYKDD	Amber	590	23	Yes	7200	12000	B
HLMP-EL2S-XZ0DD	Amber	590	23	No	7200	16000	A
HLMP-EL2S-XZKDD	Amber	590	23	No	7200	16000	A
HLMP-EL2S-XZLDD	Amber	590	23	No	7200	16000	A
HLMP-EL2T-XZ0DD	Amber	590	23	Yes	7200	16000	B
HLMP-EL2T-XZKDD	Amber	590	23	Yes	7200	16000	B
HLMP-EL2T-XZLDD	Amber	590	23	Yes	7200	16000	B
HLMP-EL2U-Z10DD	Amber	590	23	No	12000	21000	A
HLMP-EL2U-Z1KDD	Amber	590	23	No	12000	21000	A
HLMP-EL2U-Z1LDD	Amber	590	23	No	12000	21000	A
HLMP-EL2V-Z10DD	Amber	590	23	Yes	12000	21000	B
HLMP-EL2V-Z1KDD	Amber	590	23	Yes	12000	21000	B
HLMP-EL2V-Z1LDD	Amber	590	23	Yes	12000	21000	B

High Brightness 5mm Round LED Lamp

Part Number	Color	Dominant Wavelength (nm)	Viewing Angle (°)	Standoff (Yes/NO)	Luminous Intensity (mcd) @ 20 mA		Package Drawing
					Min.	Max.	
23° Viewing Angle							
HLMP-CB2G-UW0DD	Blue	470	23	No	3200	7200	C
HLMP-CB2H-UW0DD	Blue	470	23	Yes	3200	7200	D
HLMP-CB2A-VW0DD	Blue	470	23	No	4200	7200	C
HLMP-CB2A-VWBDD	Blue	470	23	No	4200	7200	C
HLMP-CB2A-VWCDD	Blue	470	23	No	4200	7200	C
HLMP-CB2B-VW0DD	Blue	470	23	Yes	4200	7200	D
HLMP-CB2B-VWBDD	Blue	470	23	Yes	4200	7200	D
HLMP-CB2B-VWCDD	Blue	470	23	Yes	4200	7200	D
HLMP-CM2G-130DD	Green	525	23	No	16000	35000	C
HLMP-CM2H-130DD	Green	525	23	Yes	16000	35000	D
HLMP-CM2A-230DD	Green	525	23	No	21000	35000	C
HLMP-CM2B-230DD	Green	525	23	Yes	21000	35000	D
HLMP-CE20-Z20DD	Cyan	505	23	No	12000	27000	C
HLMP-CE20-Z2CDD	Cyan	505	23	No	12000	27000	C
HLMP-CE20-Z2QDD	Cyan	505	23	No	12000	27000	C
HLMP-CE21-Z20DD	Cyan	505	23	Yes	12000	27000	D
HLMP-CE21-Z2CDD	Cyan	505	23	Yes	12000	27000	D
HLMP-CE21-Z2QDD	Cyan	505	23	Yes	12000	27000	D
30° Viewing Angle							
HLMP-EG3G-VX0DD	Red	626	30	No	4200	9300	A
HLMP-EG3H-VX0DD	Red	626	30	Yes	4200	9300	B
HLMP-EG3S-VX0DD	Red	621	30	No	4200	9300	A
HLMP-EG3T-VX0DD	Red	621	30	Yes	4200	9300	B
HLMP-EG3A-WX0DD	Red	626	30	No	5500	9300	A
HLMP-EG3B-WX0DD	Red	626	30	Yes	5500	9300	B
HLMP-EG3U-XY0DD	Red	622	30	No	7200	12000	A
HLMP-EG3V-XY0DD	Red	622	30	Yes	7200	12000	B
HLMP-EH3A-WX0DD	Red-Orange	615	30	No	5500	9300	A
HLMP-EH3B-WX0DD	Red-Orange	615	30	Yes	5500	9300	B

High Brightness 5mm Round LED Lamp

Part Number	Color	Dominant Wavelength (nm)	Viewing Angle (°)	Standoff (Yes/NO)	Luminous Intensity (mcd) @ 20 mA		Package Drawing
					Min.	Max.	
30° Viewing Angle							
HLMP-EL3G-VX0DD	Amber	590	30	No	4200	9300	A
HLMP-EL3H-VX0DD	Amber	590	30	Yes	4200	9300	B
HLMP-EL3A-WXKDD	Amber	590	30	No	5500	9300	A
HLMP-EL3B-WXKDD	Amber	590	30	Yes	5500	9300	B
HLMP-EL3S-VX0DD	Amber	590	30	No	4200	9300	A
HLMP-EL3S-VXKDD	Amber	590	30	No	4200	9300	A
HLMP-EL3S-VXLDD	Amber	590	30	No	4200	9300	A
HLMP-EL3T-VX0DD	Amber	590	30	Yes	4200	9300	B
HLMP-EL3T-VXKDD	Amber	590	30	Yes	4200	9300	B
HLMP-EL3T-VXLDD	Amber	590	30	Yes	4200	9300	B
HLMP-EL3U-XY0DD	Amber	590	30	No	7200	12000	A
HLMP-EL3U-XYKDD	Amber	590	30	No	7200	12000	A
HLMP-EL3U-XYLDD	Amber	590	30	No	7200	12000	A
HLMP-EL3V-XY0DD	Amber	590	30	Yes	7200	12000	B
HLMP-EL3V-XYKDD	Amber	590	30	Yes	7200	12000	B
HLMP-EL3V-XYLDD	Amber	590	30	Yes	7200	12000	B
HLMP-CB3G-TV0DD	Blue	470	30	No	2500	5500	C
HLMP-CB3H-TV0DD	Blue	470	30	Yes	2500	5500	D
HLMP-CB3A-UV0DD	Blue	470	30	No	3200	5500	C
HLMP-CB3A-UVBDD	Blue	470	30	No	3200	5500	C
HLMP-CB3A-UVCDD	Blue	470	30	No	3200	5500	C
HLMP-CB3B-UV0DD	Blue	470	30	Yes	3200	5500	D
HLMP-CB3B-UVBDD	Blue	470	30	Yes	3200	5500	D
HLMP-CB3B-UVCDD	Blue	470	30	Yes	3200	5500	D
HLMP-CM3G-Y10DD	Green	525	30	No	9300	21000	C
HLMP-CM3H-Y10DD	Green	525	30	Yes	9300	21000	D
HLMP-CM3A-Z10DD	Green	525	30	No	12000	21000	C
HLMP-CM3A-Z1BDD	Green	525	30	No	12000	21000	C
HLMP-CM3A-Z1CDD	Green	525	30	No	12000	21000	C
HLMP-CM3B-Z10DD	Green	525	30	Yes	12000	21000	D
HLMP-CM3B-Z1BDD	Green	525	30	Yes	12000	21000	D
HLMP-CM3B-Z1CDD	Green	525	30	Yes	12000	21000	D
HLMP-CE32-Y10DD	Cyan	505	30	No	9300	21000	C
HLMP-CE32-Y1CDD	Cyan	505	30	No	9300	21000	C
HLMP-CE32-Y1QDD	Cyan	505	30	No	9300	21000	C
HLMP-CE33-Y10DD	Cyan	505	30	Yes	9300	21000	D
HLMP-CE33-Y1CDD	Cyan	505	30	Yes	9300	21000	D
HLMP-CE33-Y1QDD	Cyan	505	30	Yes	9300	21000	D

High Brightness Oval LED Lamp

Part Number	Color	Dominant Wavelength (nm)	Viewing Angle (°)	Standoff (Yes/NO)	Luminous Intensity (mcd) @ 20 mA		Lead Frame Orientation	Package Drawing	Remarks
					Min.	Max.			
4 mm Standard Oval LED Lamp									
42° x 95° Viewing Angle									
HLMP-LG3V-WX0DD	Red	621	42 x 95	Yes	1380	1990	Parallel	E	For full color sign application
HLMP-LM3V-24PDD	Green	525	42 x 95	Yes	3500	6050	Parallel	E	
HLMP-LB3V-TVPDD	Blue	468	42 x 95	Yes	800	1380	Parallel	E	
45° x 90° Viewing Angle									
HLMP-LG3Y-Y10DD	Red	621	45 x 90	Yes	1990	3500	Parallel	E	For full color sign application
HLMP-LM3Y-35PDD	Green	525	45 x 90	Yes	4200	7260	Parallel	E	
HLMP-LM3U-46PDD	Green	525	45 x 90	Yes	5040	8710	Parallel	E	
HLMP-LB3Y-VWPDD	Blue	468	45 x 90	Yes	1150	1660	Parallel	E	
60° x 110° Viewing Angle									
HLMP-LG3W-VW0DD	Red	621	50 x 105	Yes	1150	1660	Parallel	E	For full color sign application
HLMP-LM3W-12PDD	Green	525	60 x 110	Yes	2900	4200	Parallel	E	
HLMP-LB3W-STPDD	Blue	468	60 x 110	Yes	660	960	Parallel	E	
50° x 100° Viewing Angle									
HLMP-LH65-XY0DD	Red Orange	615	50x100	Yes	1660	2400	Parallel	E	For mono color sign application
HLMP-LL65-XYKDD	Amber	590	50x100	Yes	1660	2400	Parallel	E	
4mm Standard Oval LED Lamp									
40° x 100° Viewing Angle									
HLMP-LG71-VY0DD	Red	626	40x100	Yes	1150	2400	Parallel	E	For full color sign application
HLMP-LM71-Z30DD	Green	525	40x100	Yes	2400	5040	Parallel	E	
HLMP-LB71-SV0DD	Blue	470	40x100	Yes	660	1380	Parallel	E	
HLMP-LG75-XY0DD	Red	626	40x100	Yes	1660	2400	Parallel	E	
HLMP-LG73-XZ0DD	Red	626	40x100	Yes	1660	2900	Parallel	E	
HLMP-LM75-34CDD	Green	530	40x100	Yes	4200	6050	Parallel	E	
HLMP-LM73-35PDD	Green	530	40x100	Yes	4200	7260	Parallel	E	
HLMP-LB72-UWPDD	Blue	470	40x100	Yes	960	1660	Parallel	E	
4 mm Super Oval LED Lamp									
60° x 120° Viewing Angle									
HLMP-SL20-MP0DD	Amber	590	60x120	Yes	520	1150	Perpendicular	F	For mono color sign application
HLMP-RL20-MP0DD	Amber	590	60x120	Yes	520	1150	Parallel	G	
5 mm Standard Oval LED Lamp									
40° x 100° Viewing Angle									
HLMP-HG64-WX0DD	Red	626	40x100	No	1380	1990	Parallel	H	For full color sign application
HLMP-HG65-WX0DD	Red	626	40x100	Yes	1380	1990	Parallel	I	
HLMP-HM64-34BDD	Green	525	40x100	No	4200	6050	Parallel	H	
HLMP-HM65-34BDD	Green	525	40x100	Yes	4200	6050	Parallel	I	

High Brightness Oval LED Lamp

Part Number	Color	Dominant Wavelength (nm)	Viewing Angle (°)	Standoff (Yes/ NO)	Luminous Intensity (mcd) @ 20 mA		Lead Frame Orientation	Package Drawing	Remarks
					Min.	Max.			
HLMP-HG74-XY0DD	Red	626	40x100	No	1660	2400	Parallel	H	For full color sign application
HLMP-HG75-XY0DD	Red	626	40x100	Yes	1660	2400	Parallel	I	
HLMP-HM74-34CDD	Green	530	40x100	No	4200	6050	Parallel	H	
HLMP-HM75-34CDD	Green	530	40x100	Yes	4200	6050	Parallel	I	
HLMP-HB74-UVCDD	Blue	470	40x100	No	960	1380	Parallel	H	
HLMP-HB75-UVCDD	Blue	470	40x100	Yes	960	1380	Parallel	I	
HLMP-HH64-WX0DD	Red Orange	615	40x100	No	1380	1990	Parallel	H	For mono color sign application
HLMP-HH65-WX0DD	Red Orange	615	40x100	Yes	1380	1990	Parallel	I	
HLMP-HL64-XYKDD	Amber	590	40x100	No	1660	2400	Parallel	H	
HLMP-HL64-XYLDD	Amber	590	40x100	No	1660	2400	Parallel	H	
HLMP-HL65-XYKDD	Amber	590	40x100	Yes	1660	2400	Parallel	I	
HLMP-HL65-XYLDD	Amber	590	40x100	Yes	1660	2400	Parallel	I	
HLMP-HG70-VX0DD	Red	626	40x100	No	1150	1990	Parallel	H	
HLMP-HG71-VX0DD	Red	626	40x100	Yes	1150	1990	Parallel	I	
HLMP-HB70-TVBDD	Blue	470	40x100	No	800	1380	Parallel	H	
HLMP-HB70-TVCDD	Blue	470	40x100	No	800	1380	Parallel	H	
HLMP-HB71-TVBDD	Blue	470	40x100	Yes	800	1380	Parallel	I	
HLMP-HB71-TVCDD	Blue	470	40x100	Yes	800	1380	Parallel	I	
HLMP-HM70-23BDD	Green	525	40x100	No	3500	5040	Parallel	H	
HLMP-HM70-23CDD	Green	525	40x100	No	3500	5040	Parallel	H	
HLMP-HM71-23BDD	Green	525	40x100	Yes	3500	5040	Parallel	I	
HLMP-HM71-23CDD	Green	525	40x100	Yes	3500	5040	Parallel	I	
HLMP-HG7U-XY0DD	Red	621	40x100	No	1660	2400	Parallel	H	
HLMP-HG7U-XZ0DD	Red	621	40x100	No	1660	2900	Parallel	H	
HLMP-HG7Y-XY0DD	Red	621	40x100	Yes	1660	2400	Parallel	I	
HLMP-HG7Y-XZ0DD	Red	621	40x100	Yes	1660	2900	Parallel	I	
HLMP-HL7U-XYKDD	Amber	590	40x100	No	1660	2400	Parallel	H	
HLMP-HL7U-XYLDD	Amber	590	40x100	No	1660	2400	Parallel	H	
HLMP-HL7U-XZKDD	Amber	590	40x100	No	1660	2900	Parallel	H	
HLMP-HL7U-XZLDD	Amber	590	40x100	No	1660	2900	Parallel	H	
HLMP-HL7Y-XYKDD	Amber	590	40x100	Yes	1660	2400	Parallel	I	
HLMP-HL7Y-XYLDD	Amber	590	40x100	Yes	1660	2400	Parallel	I	
HLMP-HL7Y-XZKDD	Amber	590	40x100	Yes	1660	2900	Parallel	I	
HLMP-HL7Y-XZLDD	Amber	590	40x100	Yes	1660	2900	Parallel	I	
HLMP-HM7U-35PDD	Green	525	40x100	No	4200	7260	Parallel	H	
HLMP-HM7Y-35PDD	Green	525	40x100	Yes	4200	7260	Parallel	I	
HLMP-HB7U-VXPDD	Blue	468	40x100	No	1150	1990	Parallel	H	

High Brightness Oval LED Lamp

Part Number	Color	Dominant Wavelength (nm)	Viewing Angle (°)	Standoff (Yes/ NO)	Luminous Intensity (mcd) @ 20 mA		Lead Frame Orientation	Package Drawing	Remarks
					Min.	Max.			
5 mm Standard Oval LED Lamps									
40° x 100° Viewing Angle									
HLMP-HB7Y-VXPDD	Blue	468	40x100	Yes	1150	1990	Parallel	I	For mono color sign application
5 mm Mini Oval LED Lamps									
30° x 70° Viewing Angle									
HLMP-AG64-Z10DD	Red	626	30x70	No	2400	3500	Parallel	J	For full color sign application
HLMP-AG65-Z10DD	Red	626	30x70	Yes	2400	3500	Parallel	K	
HLMP-AM64-460DD	Green	525	30x70	No	5040	8710	Parallel	J	
HLMP-AM65-45BDD	Green	525	30x70	Yes	5040	7260	Parallel	K	
HLMP-AG74-120DD	Red	626	30x70	No	2900	4200	Parallel	J	
HLMP-AG75-120DD	Red	626	30x70	Yes	2900	4200	Parallel	K	
HLMP-AM74-56CDD	Green	530	30x70	No	6050	8710	Parallel	J	
HLMP-AM75-56CDD	Green	530	30x70	Yes	6050	8710	Parallel	K	
HLMP-AB74-WXBDD	Blue	470	30x70	No	1380	1990	Parallel	J	
HLMP-AB75-WXBDD	Blue	470	30x70	Yes	1380	1990	Parallel	K	
HLMP-AH64-Z10DD	Red Orange	615	30x70	No	2400	3500	Parallel	J	For mono color sign application
HLMP-AH65-Z10DD	Red Orange	615	30x70	Yes	2400	3500	Parallel	K	
HLMP-AJ66-Z10DD	Orange	605	30x70	No	2400	3500	Parallel	J	
HLMP-AJ67-Z10DD	Orange	605	30x70	Yes	2400	3500	Parallel	K	
HLMP-AL64-23KDD	Amber	590	30x70	No	3500	5040	Parallel	J	
HLMP-AL65-23KDD	Amber	590	30x70	Yes	3500	5040	Parallel	K	
HLMP-AG70-Z20DD	Red	626	30x70	No	2400	4200	Parallel	J	
HLMP-AG71-Z20DD	Red	626	30x70	Yes	2400	4200	Parallel	K	
HLMP-AL70-13KDD	Amber	590	30x70	No	2900	5040	Parallel	J	
HLMP-AL70-13LDD	Amber	590	30x70	No	2900	5040	Parallel	J	
HLMP-AL71-13KDD	Amber	590	30x70	Yes	2900	5040	Parallel	K	
HLMP-AL71-13LDD	Amber	590	30x70	Yes	2900	5040	Parallel	K	
HLMP-AB70-TWBDD	Blue	470	30x70	No	800	1660	Parallel	J	
HLMP-AB70-TWCDD	Blue	470	30x70	No	800	1660	Parallel	J	
HLMP-AB71-TWBDD	Blue	470	30x70	Yes	800	1660	Parallel	K	
HLMP-AB71-TWCDD	Blue	470	30x70	Yes	800	1660	Parallel	K	
HLMP-AM70-35BDD	Green	525	30x70	No	4200	7260	Parallel	J	
HLMP-AM70-35CDD	Green	525	30x70	No	4200	7260	Parallel	J	
HLMP-AM71-35BDD	Green	525	30x70	Yes	4200	7260	Parallel	K	
HLMP-AM71-35CDD	Green	525	30x70	Yes	4200	7260	Parallel	K	

High Brightness Lamps

High Brightness LED Lamps 1.3:1 Intensity Bin Limits (mcd at 20mA)

Bin ID	Min.	Max.
D	65	85
E	85	110
F	110	140
G	140	180
H	180	240
J	240	310
K	310	400
L	400	520
M	520	680
N	680	880
P	880	1150
Q	1150	1500
R	1500	1900
S	1900	2500
T	2500	3200
U	3200	4200
V	4200	5500
W	5500	7200
X	7200	9300
Y	9300	12000
Z	12000	16000
1	16000	21000
2	21000	27000
3	27000	35000
4	35000	45000
5	45000	59000
6	59000	76000

Tolerance for each bin limit is ±15%

High Brightness LED Lamps 1.2:1 Intensity Bin Limits (mcd at 20mA)

Bin ID	Min.	Max.
P	380	460
Q	460	550
R	550	660
S	660	800
T	800	960
U	960	1150
V	1150	1380
W	1380	1660
X	1660	1990
Y	1990	2400
Z	2400	2900
1	2900	3500
2	3500	4200
3	4200	5040
4	5040	6050
5	6050	7260
6	7260	8710
7	8710	10460
8	10460	12560
9	12560	15100

Tolerance for each bin limit is ±15%

Color Bin Structure

Bin ID	Wavelength (nm)		Remark
	Min.	Max.	
Red			
--	618.0	630.0	Type 1
--	620.0	630.0	Type 2
Red Orange *1			
--	612.0	619.0	Type 1
--	612.0	621.7	Type 2
Orange *1			
1	600.0	604.0	Type 1
2	604.0	608.0	
3	608.0	612.0	
2	599.5	604.5	Type 2
4	604.5	610.5	
Amber			
1	584.5	587.0	
2	587.0	589.5	
4	589.5	592.0	
6	592.0	594.5	
Green *1			
1	520.0	524.0	Type 1
2	524.0	528.0	
3	528.0	532.0	
4	532.0	536.0	
5	536.0	540.0	
1	519.0	523.0	Type 2
2	523.0	527.0	
3	527.0	531.0	
4	531.0	535.0	
5	535.0	539.0	
Blue			
1	460.0	464.0	
2	464.0	468.0	
3	468.0	472.0	
4	472.0	476.0	
5	476.0	480.0	

Note 1: There are 2 types of color bin limits. Please refer to individual datasheet for details.

Tolerance for each bin limit is ±0.5nm

Package Drawings

5 mm Round LED Lamp

A: Non-standoff

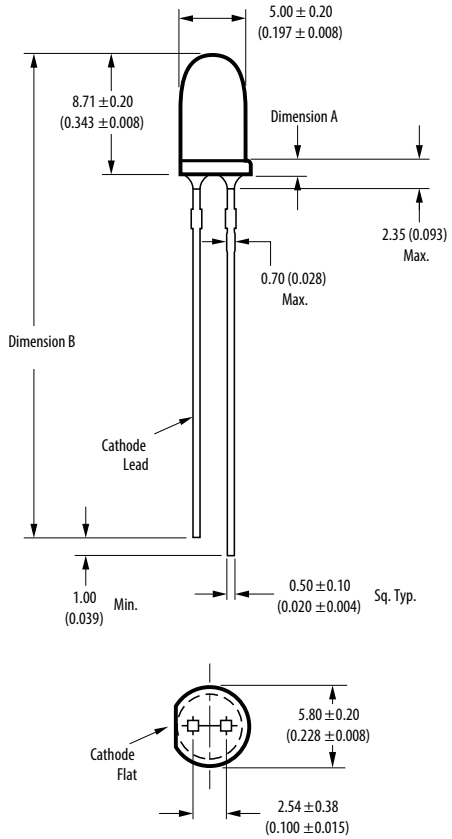

B: Standoff

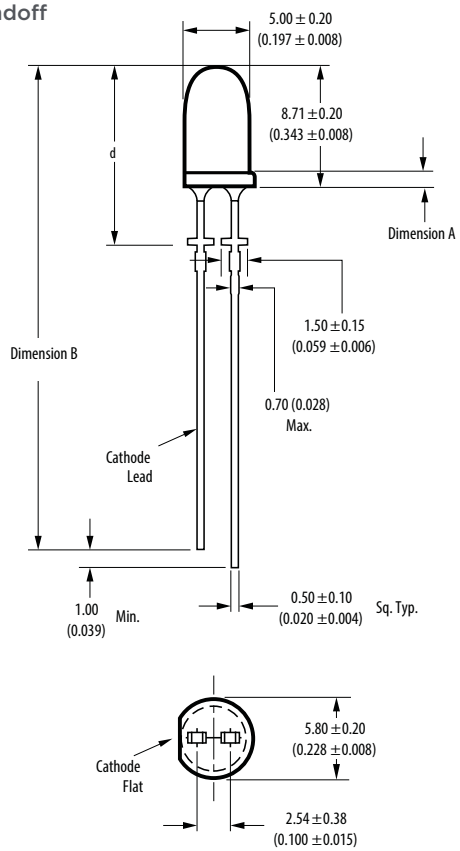

Note:
Please refer to individual datasheet for Dimension A, B and D.

5 mm Round LED Lamp

C: Non-standoff

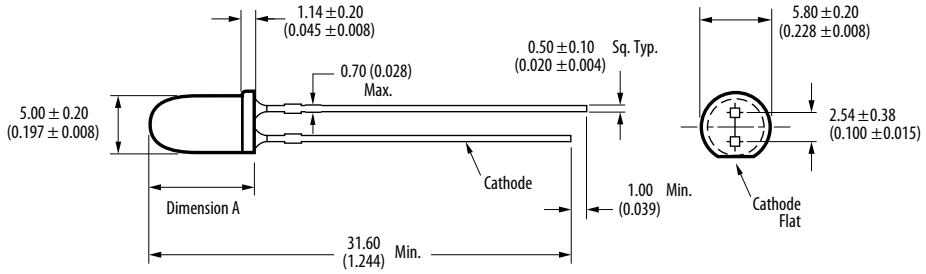

D: Standoff

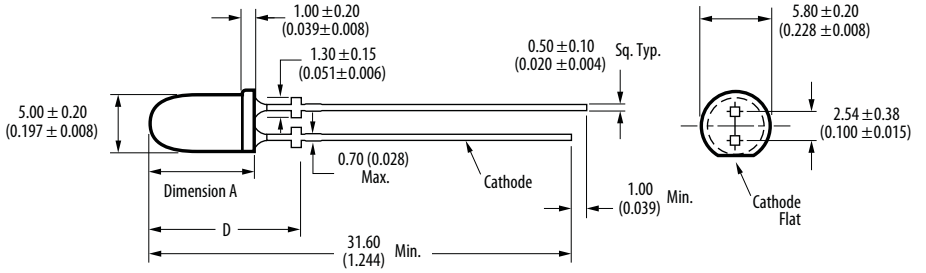

Note:
Please refer to individual datasheet for dimension A and D.

4 mm Standard Oval LED Lamp

E

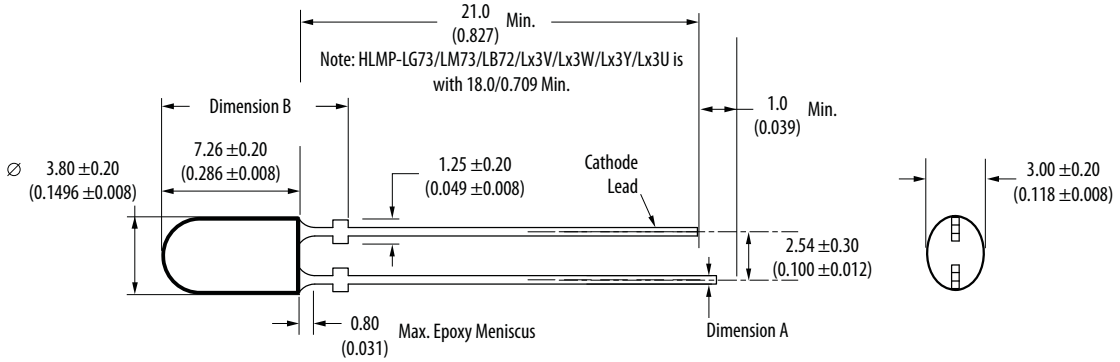

Note:
Please refer to individual datasheet for dimension A and dimension B.

4 mm Super Oval LED Lamp 60° x 120° Viewing Angle

F

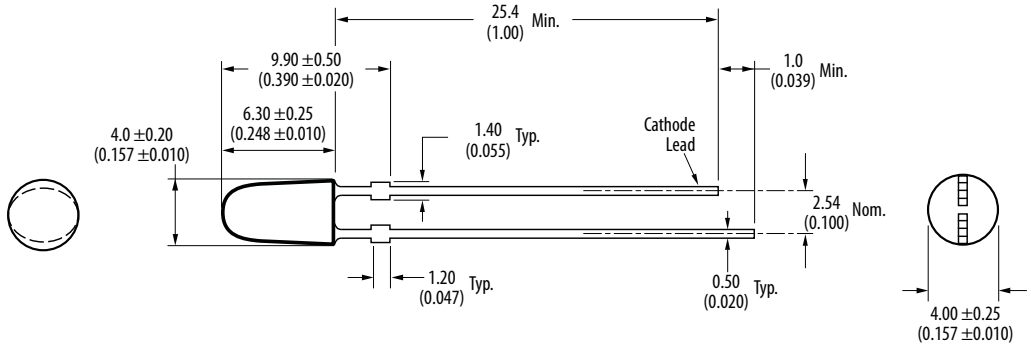

G

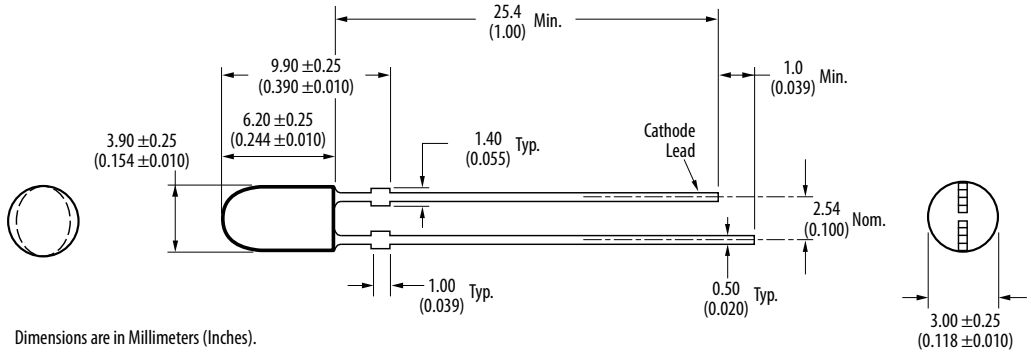

Dimensions are in Millimeters (Inches).

Package Drawings

5 mm Standard Oval LED Lamp 40° x 100° Viewing Angle

H

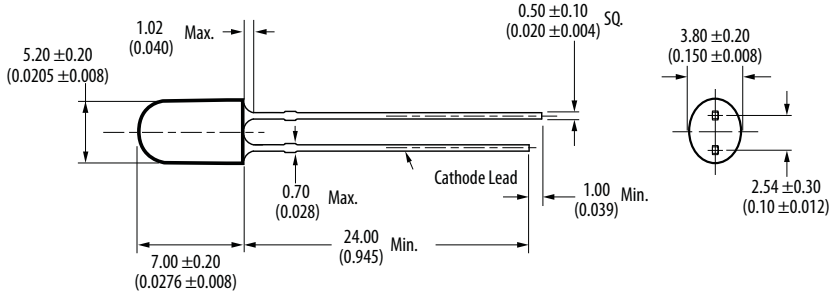

I

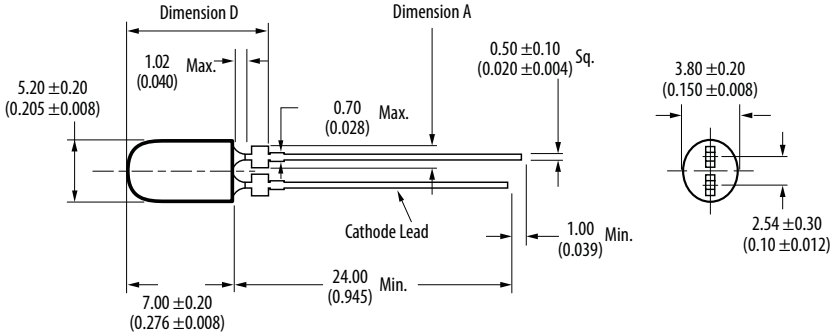

5mm Mini Oval LED Lamp 30° x 70° Viewing Angle

J

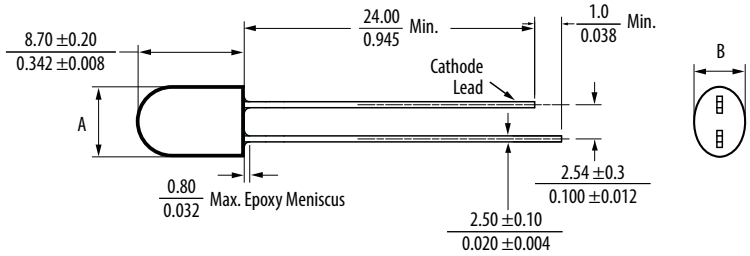

K

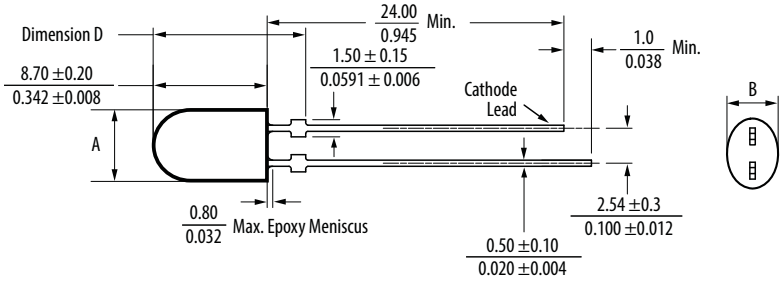

Note:
For all package drawings above, the dimension are in millimeters (inches).
Please refer to individual datasheet for dimension A, B and D.

High Brightness SMT Lamps

Description

Broadcom offers industry's first Surface Mount High Brightness Round and Oval LED lamps for electronic sign application. These SMT lamps are compatible with industrial reflow soldering processes and made with advanced optical grade epoxy to provide superior performance in outdoor application.

Benefits

- Compact form factor with well defined spatial radiation pattern
- High Brightness AlInGaP and InGaN material available in Red, Amber, Green and Blue
- Moisture sensitivity level (MSL) 2A compatible with industrial reflow soldering process
- Lens features: Tinted for SMT Round – Tinted and diffused for SMT Oval

Applications

- Electronic signs and signals
  - Traffic signal
  - Variable message signs
  - Full color signs
  - Mono color signs

High Brightness SMT Round and Oval Lamps

Part Number	Color	Typ. Dominant Wavelength (nm)	Typ. Viewing Angle (°)	Lens Tinted	Lens Diffused	Luminous Intensity (mcd) @ 20 mA		Package Drawing
						Min.	Max.	
SMT Round Lamps								
30° Viewing Angle								
ALMD-EG3D-VX002	Red	626	30	Yes	No	4200	9300	A
ALMD-EL3D-VX002	Amber	590	30	Yes	No	4200	9300	
ALMD-CM3D-XZ002	Green	525	30	Yes	No	7200	16000	
ALMD-CB3D-SU002	Blue	470	30	Yes	No	1900	5500	
ALMD-EG3E-VX002	Red	626	30	Yes	No	4200	9300	C
ALMD-EL3E-VX002	Amber	590	30	Yes	No	4200	9300	
ALMD-CM3E-Y1002	Green	525	30	Yes	No	9300	21000	
ALMD-CB3E-SU002	Blue	470	30	Yes	No	1900	4200	
ALMD-CM3F-Y1002	Green	525	30	Yes	No	9300	21000	
ALMD-CB3F-TV002	Blue	470	30	Yes	No	2500	5500	

High Brightness SMT Round and Oval Lamps

Part Number	Color	Typ. Dominant Wavelength (nm)	Typ. Viewing Angle (°)	Lens Tinted	Lens Diffused	Luminous Intensity (mcd) @ 20 mA		Package Drawing
						Min.	Max.	
SMT Round Lamps								
23° Viewing Angle								
ALMD-EG2E-XZ002	Red	621	23	Yes	No	7200	16000	C
ALMD-EL2E-XZ002	Amber	590	23	Yes	No	7200	16000	C
ALMD-EL2E-XZK02	Amber	590	23	Yes	No	7200	16000	C
ALMD-EL2E-XZL02	Amber	590	23	Yes	No	7200	16000	C
ALMD-CM2F-12002	Green	525	23	Yes	No	16000	27000	C
ALMD-CM2F-12B02	Green	525	23	Yes	No	16000	27000	C
ALMD-CM2F-12C02	Green	525	23	Yes	No	16000	27000	C
ALMD-CB2E-UV002	Blue	470	23	Yes	No	3200	5500	C
ALMD-CB2E-UVB02	Blue	470	23	Yes	No	3200	5500	C
ALMD-CB2E-UVC02	Blue	470	23	Yes	No	3200	5500	C
15° Viewing Angle								
ALMD-EG1E-Z2002	Red	621	15	Yes	No	12000	27000	C
ALMD-EL1E-Z2002	Amber	590	15	Yes	No	12000	27000	C
ALMD-EL1E-Z2K02	Amber	590	15	Yes	No	12000	27000	C
ALMD-EL1E-Z2L02	Amber	590	15	Yes	No	12000	27000	C
ALMD-CM1F-34002	Green	525	15	Yes	No	27000	45000	C
ALMD-CM1F-34B02	Green	525	15	Yes	No	27000	45000	C
ALMD-CM1F-34C02	Green	525	15	Yes	No	27000	45000	C
ALMD-CB1E-VW002	Blue	470	15	Yes	No	4200	7200	C
ALMD-CB1E-VWB02	Blue	470	15	Yes	No	4200	7200	C
ALMD-CB1E-VWC02	Blue	470	15	Yes	No	4200	7200	C

High Brightness SMT Round and Oval Lamps

Part Number	Color	Typ. Dominant Wavelength (nm)	Typ. Viewing Angle (°)	Lens Tinted	Lens Diffused	Luminous Intensity (mcd) @ 20 mA		Package Drawing
						Min.	Max.	
SMT Oval Lamps								
40° × 100° Viewing Angle								
ALMD-LG36-WZ002	Red	626	40 x 100	Yes	Yes	1380	2900	B
ALMD-LL36-WZ002	Amber	590	40 x 100	Yes	Yes	1380	2900	
ALMD-LM36-14002	Green	525	40 x 100	Yes	Yes	2900	6050	
ALMD-LB36-SV002	Blue	470	40 x 100	Yes	Yes	660	1380	
ALMD-LG37-XZ002	Red	626	40 x 100	Yes	Yes	1660	2900	D
ALMD-LL37-XZ002	Amber	590	40 x 100	Yes	Yes	1660	2900	
ALMD-LM37-24002	Green	525	40 x 100	Yes	Yes	3500	6050	
ALMD-LB37-SU002	Blue	470	40 x 100	Yes	Yes	660	1150	
ALMD-LM38-24002	Green	525	40 x 100	Yes	Yes	3500	6050	
ALMD-LB38-TV002	Blue	470	40 x 100	Yes	Yes	800	1380	

High Brightness SMT Round Lamps 1.3:1 Intensity Bin Limits (mcd at 20mA)

Bin ID	Min.	Max.
S	1900	2500
T	2500	3200
U	3200	4200
V	4200	5500
W	5500	7200
X	7200	9300
Y	9300	12000
Z	12000	16000
1	16000	21000
2	21000	27000
3	27000	35000
4	35000	45000

Tolerance of each bin limit is ± 15%

High Brightness SMT Oval Lamps 1.2:1 Intensity Bin Limits (mcd at 20mA)

Bin ID	Min.	Max.
R	550	660
S	660	800
T	800	960
U	960	1150
V	1150	1380
W	1380	1660
X	1660	1990
Y	1990	2400
Z	2400	2900
1	2900	3500
2	3500	4200
3	4200	5040
4	5040	6050

Tolerance of each bin limit is ± 15%

Color Bin Structure

Bin ID	Wavelength (nm)	
	Min.	Max.
Red	618.0	630.0

Tolerance for each bin limits is ± 0.05nm

Bin ID	Wavelength (nm)	
	Min.	Max.
Amber		
1	584.5	587.0
2	587.0	589.5
4	589.5	592.0
6	592.5	594.0

Tolerance for each bin limits is ± 0.05nm

Bin ID	Wavelength (nm)	
	Min.	Max.
Green		
1	519.0	523.0
2	523.0	527.0
3	527.0	531.0
4	531.0	535.0
5	535.0	539.0

Tolerance for each bin limits is ± 0.05nm

Bin ID	Wavelength (nm)	
	Min.	Max.
Blue		
1	460.0	464.0
2	464.0	468.0
3	468.0	472.0
4	472.0	476.0
5	476.0	480.0

Tolerance for each bin limits is ± 0.05nm

Package Drawings

High Brightness SMT Lamps Package Drawing

Package Drawing A

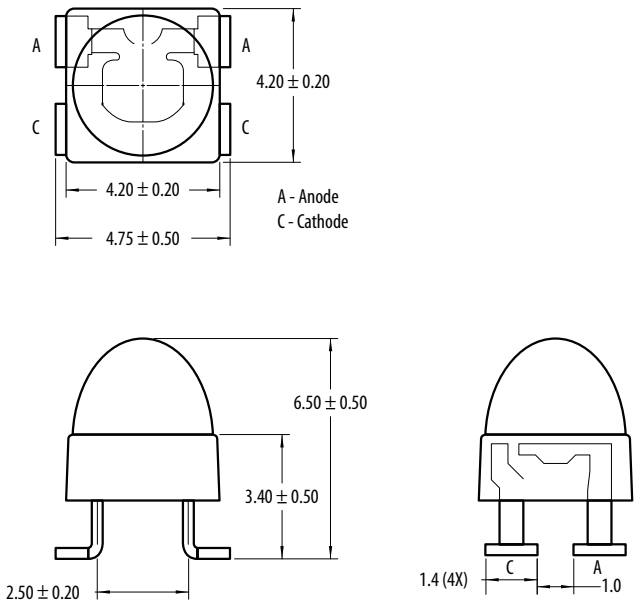

Package Drawing B

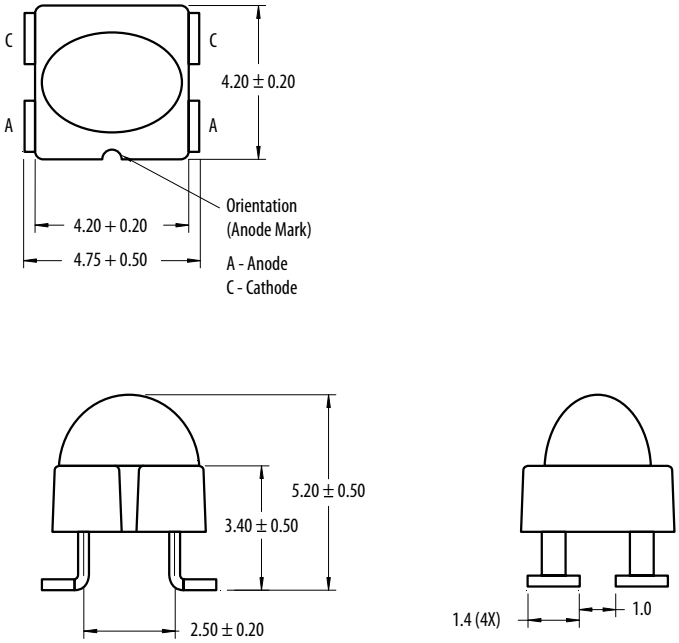

Package Drawing C

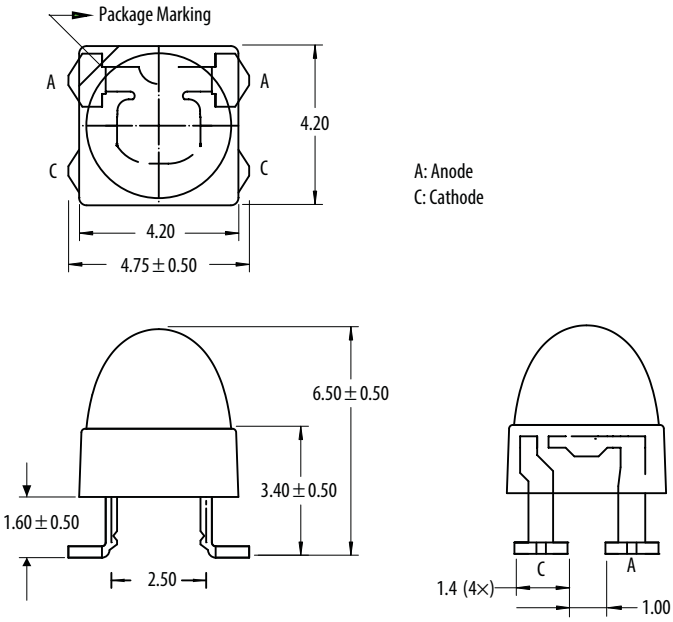

Package Drawing D

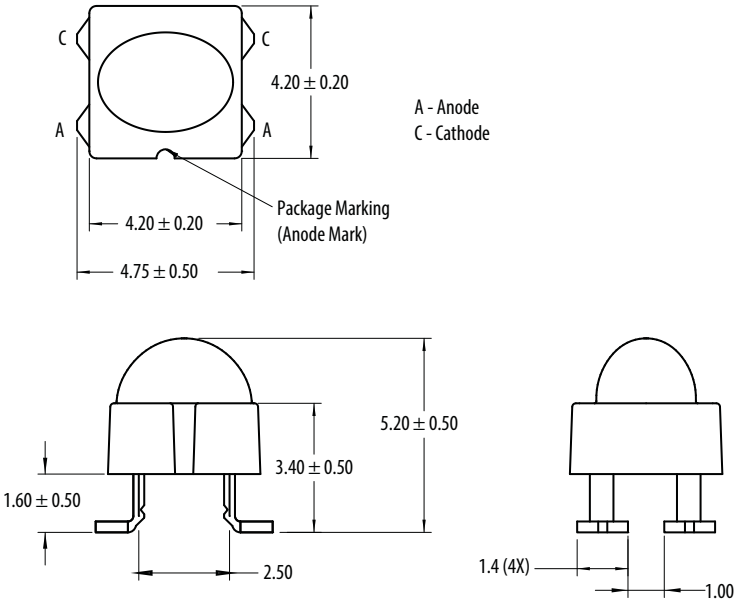

Notes:
1. All dimensions in millimeters (inches).
2. Tolerance is ± 0.20mm unless other specified.

Surface Mount

Description

This surface-mount LED comes in PLCC standard package dimension and DFN package. PLCC has a substrate made up of a molded plastic reflector sitting on top of a bent lead frame. The die is attached within the reflector cavity and the cavity is encapsulated by epoxy or silicone material.

DFN LEDs (Dual flat no-leads) are in small form factor and higher thermal efficiency. It offers great performance on a small surface area with the use of very flat lead frames and large outer contact faces acting as heat sink.

The SMT LED products with a viewing angle of 120° is ideal for instruments/switch/icon back lighting. With additional lens in 30° and 50° variants, these products are especially fitting to applications for traffic lights, CHMSL and displays. Its external reflector makes easy coupling with light pipe/light guide for an even-larger area back lighting. The package design coupled with careful selection of component materials allow these products to perform with high reliability in a larger temperature range -40°C to 100°C. The high reliability feature is crucial to Automotive Interior and Indoor ESS.

The surface-mount LED is designed to be compatible with industrial reflow soldering process.

Benefits

- Industry Standard PLCC SMT package
  - No change in existing board layout, drop-in replacement for the existing PLCC SMT LEDs
- High brightness using AlInGaP and InGaN dice technologies
- Available in various colors
  - Red, Red Orange, Orange, Amber, Yellow Green, Emerald Green, Green, Blue and White
  - Bi-colors in various combinations
  - Tri-colors in Red, Green and Blue
- Available in viewing angle of 30°, 50° and 120°
  - Well-suited for backlighting applications
- High volume, high reliability
  - Cost-eff ective solution
- Black surface and black body options to enhance contrast for display application
- Amusement lighting
- Decorative lighting
- Audio system illumination
- Gaming machine

Applications

- Interior automotive
  - Instrument panel backlighting
  - Central console backlighting Instrument panel backlighting
  - Cabin backlighting
- Exterior automotive
  - Turn signals
  - Side repeater lamps
  - CHMSLs (center high-mounted stop light)
  - Rear combination lamps
  - Puddle lights
- Electronic Signs and Signals
  - Interior full color sign
  - Variable message sign
- Electronic Signs and Signals
  - Interior full color sign
  - Variable message sign
- Office Automation, Electrical Appliances, Industrial Equipment
  - Front panel backlighting
  - Push button backlighting
  - Display backlighting
- musement lighting
- Decorative lighting
- Audio system illumination
- Gaming machine

PLCC Surface Mount LEDs–PLCC-2 White

Part Number	Color	Chromaticity		Viewing Angle	Intensity		Vf typ.	Test Current
		x	y		Min.	Max.		
HSMW-A100-V40J1	InGaN White	0.31	0.31	120	715	1800	3.4	20

Notes:
1. The luminous intensity I_v, is measured at the mechanical axis of the lamp package. The actual peak of the spatial radiation pattern may not be aligned with this axis.
2. The chromaticity coordinates are derived from the CIE 1931 Chromaticity Diagram and represents the perceived color of the device.
3. $\theta_{1/2}$ is the off-axis angle where the luminous intensity is ½ the peak intensity.

PLCC Surface Mount LEDs–PLCC-2

Part Number	Color	Dominant Wavelength	Viewing Angle	Intensity		Vf typ.	Test Current
HSMS-A100-J00J1	Red	626	120	4.5	–	2.2	20
HSMH-A100-L00J1	Red	637	120	11.2	–	1.9	20
HSMC-A100-Q00J1	Red	626	120	71.5	–	1.9	20
HSMC-A101-S40J1	Red	626	120	180	450	1.9	20
ASMT-URB4-PU802	Red	626	120	560	1400	1.9	20
HSMJ-A100-T40J1	Red Orange	615	120	285	715	1.9	20
HSMJ-A101-S00J1	Red Orange	615	120	180	–	1.9	20
ASMT-UHB4-PU802	Red Orange	615	120	560	1400	1.9	20
HSMD-A100-J00J1	Orange	602	120	4.4	–	2.2	20
HSML-A100-Q00J1	Orange	605	120	71.5	–	1.9	20
HSMY-A100-J00J1	Amber	585	120	4.5	–	2.2	20
HSMA-A101-S70J1	Amber	590	120	224	450	1.9	20
ASMT-UAB4-PU802	Amber	590	120	560	1400	1.9	20
HSMG-A100-J02J1	Yellow Green	569	120	4.5	–	2.2	20
HSME-A100-M02J1	Yellow Green	569	120	18	–	1.9	20
HSMG-A100-H01J1	Emerald Green	560	120	2.8	–	2.2	20
HSME-A100-L01J1	Emerald Green	560	120	11.2	–	1.9	20
HSMM-A100-U4PJ1	Green	525	120	450	1125	3.4	20
ASMT-UGB5-NW705	Green	525	120	1400	2850	3.4	20
HSMN-A100-S4YJ1	Blue	470	120	180	450	3.4	20
ASMT-UBB5-NS8Q2	Blue	470	120	224	560	3.4	20

Notes:
1. The luminous intensity I_V, is measured at the mechanical axis of the lamp package. The actual peak of the spatial radiation pattern may not be aligned with this axis.
2. The dominant wavelength, λ_D, is derived from the CIE Chromaticity Diagram and represents the color of the device.
3. $\theta_{1/2}$ is the off-axis angle where the luminous intensity is 1/2 the peak intensity.

PLCC-2 White (ASMT-UWB1)

Part Number	Color	CCT (K)	CRI	Viewing Angle $2\theta_{1/2}$ (°)	Luminous Intensity (mcd)			Test Current (mA)
					Min	Typ	Max	
ASMT-UWB1-NX702	InGaN White	4500 ~ 8000	70	120	2240	2300	4500	20
ASMT-UWB1-NX712	InGaN White	2700 ~ 4000	70	120	2240	2300	4500	20
ASMT-UWB1-NX7A2	InGaN White	8000	70	120	2240	2300	4500	20
ASMT-UWB1-NX7B2	InGaN White	6500	70	120	2240	2300	4500	20
ASMT-UWB1-NX7C2	InGaN White	5700	70	120	2240	2300	4500	20
ASMT-UWB1-NX7D2	InGaN White	5000	70	120	2240	2300	4500	20
ASMT-UWB1-NX7E2	InGaN White	4500	70	120	2240	2300	4500	20
ASMT-UWB1-NX7F2	InGaN White	4000	70	120	2240	2300	4500	20
ASMT-UWB1-NX3G2	InGaN White	3500	70	120	1800	2300	3550	20
ASMT-UWB1-NX3H2	InGaN White	3000	70	120	1800	2300	3550	20
ASMT-UWB1-NX3J2	InGaN White	2700	70	120	1800	2300	3550	20
ASMT-UWB2-NX302	InGaN White	4500 ~ 8000	80	120	1800	2300	3550	20
ASMT-UWB2-NX3A2	InGaN White	8000	80	120	1800	2300	3550	20
ASMT-UWB2-NX3B2	InGaN White	6500	80	120	1800	2300	3550	20
ASMT-UWB2-NX3C2	InGaN White	5700	80	120	1800	2300	3550	20
ASMT-UWB2-NX3D2	InGaN White	5000	80	120	1800	2300	3550	20
ASMT-UWB2-NX3E2	InGaN White	4500	80	120	1800	2300	3550	20
ASMT-UWB2-NW7F2	InGaN White	4000	80	120	1400	1500	2850	20
ASMT-UWB2-NW7G2	InGaN White	3500	80	120	1400	1500	2850	20
ASMT-UWB2-NW7H2	InGaN White	3000	80	120	1400	1500	2850	20
ASMT-UWB2-NW7J2	InGaN White	2700	80	120	1400	1500	2850	20

Tolerance ±12%

PLCC Surface Mount LEDs Power–PLCC-4

Part Number	Color	Typ. Dominant Wavelength λ_D [1] nm)	Viewing Angle $2\theta_{1/2}$ [2] (°)	Min. I_V (mcd)	Max. I_V (mcd)	Typ. V_F (V)	Test Current (mA)
HSMC-A401-U80M1	Red	626	120	560	1400	2.2	50
ASMT-SRB4-PW505	Red	626	120	1125	3550	2.2	50
HSMA-A401-U80M1	Amber	590	120	560	1400	2.2	50
HSMA-A401-V30M1	Amber	590	120	715	1400	2.2	50
ASMT-SAB4-PW505	Amber	590	120	1125	3550	2.2	50
HSML-A401-U40M1	Orange	605	120	450	1125	2.2	50
HSMJ-A401-U40M1	Red Orange	615	120	450	1125	2.2	50
ASMT-SHB4-PW905	Red Orange	615	120	1125	3550	2.2	50
HSME-A401-P4PM1	Emerald Green	567	120	45	112.5	2.2	50
HSMM-A400-V8QM2	Green	525	120	1400	3550	3.8	30
HSMM-A400-W8YM2	Green	525	120	1400	3550	3.8	30
ASMT-SGB5-NW703	Green	525	120	1400	2850	3.2	30
HSMM-A400-S8PM2	Blue	470	120	224	560	3.8	30
HSMN-A400-S8QM2	Blue	470	120	224	560	3.8	30
ASMT-SBB5-NT703	Blue	470	120	355	715	3.2	30

Notes:
1. The dominant wavelength, λ_D, is derived from the CIE Chromaticity Diagram and represents the color of the device.
2. $\theta_{1/2}$ is the off-axis angle where the luminous intensity is 1/2 the peak intensity.
3. The luminous intensity, I_V, is measured at the mechanical axis of the lamp package. The actual peak of the spatial radiation pattern may not be aligned with this axis.

Power PLCC-4 White

Part Number	Color	Chromaticity		Viewing Angle	Intensity			Vf typ.	Test Current
		x	y		Min.	Typ.	Max.		
HSMW-A400-U00M2	InGaN White	0.31	0.31	120	450	700	-	3.8	30
ASMT-SWBM-NV803	InGaN White	0.318	0.318	120	900	1100	2240	3.5	30

Notes:
1. The luminous intensity I_V, is measured at the mechanical axis of the lamp package. The actual peak of the spatial radiation pattern may not be aligned with this axis.
2. I_V Tolerance = ±12%.
3. The chromaticity coordinates are derived from the CIE 1931 Chromaticity Diagram and represent the perceived color of the device.
4. θ½ is the off-axis angle where the luminous intensity is ½ the peak intensity.

Power PLCC-4 with Lens

Part Number	Color	Dominant Wavelength λ_D [1] (nm)	Viewing Angle $2\theta_{1/2}$ (°)	Min. I_V (mcd)	Max. I_V (mcd)	Typ. V_F (V)	Test Current (mA)
HSMC-A431-Y80M1	AlInGaP Red	626	30	3550	9000	2.2	50
HSMC-A431-X90M1	AlInGaP Red	626	30	2240	7150	2.2	50
HSMC-A461-V00M1	AlInGaP Red	626	50	715	–	2.2	50
HSMJ-A430-W50M1	AlInGaP Red Orange	615	30	1125	3550	2.2	50
HSMJ-A431-X90M1	AlInGaP Red Orange	615	30	2240	7150	2.2	50
HSMJ-A461-W40M1	AlInGaP Red Orange	615	50	1125	2850	2.2	50
HSML-A431-X90M1	AlInGaP Orange	605	30	2240	7150	2.2	50
HSML-A461-W40M1	AlInGaP Orange	605	50	1125	2850	2.2	50
HSMA-A431-Y00M1	AlInGaP Amber	590	30	2850	–	2.2	50
HSMA-A431-Z50M1	AlInGaP Amber	590	30	4500	14000	2.2	50
HSMA-A461-X83M1	AlInGaP Amber	590	50	2240	5600	2.2	50
HSMM-A430-Y7YM2	InGaN Green	525	30	3550	7150	3.9	30
HSMN-A430-V7YM2	InGaN Blue	470	30	900	1800	3.9	30

Notes:
1. The luminous intensity, I_V, is measured at the mechanical axis of the lamp package. The actual peak of the spatial radiation pattern may not be aligned with this axis.
2. I_V tolerance ±12%.
3. The dominant wavelength, λ_D, is derived from the CIE Chromaticity Diagram and represents the color of the device.
4. $\theta_{1/2}$ is the off-axis angle where the luminous intensity is ½ the peak intensity.

PLCC Surface Mount LEDs

Bicolor PLCC-4

Part Number	Color	Min. I_v @ 20mA		Typ. I_v (mcd) @ 20mA
		Bin ID	mcd	
HSMF-A201-A00J1	GaP Red	K2	8	16
	GaP Yellow Green	L1	10	20
HSMF-A202-A00J1	GaP Red	K2	8	16
	GaP Yellow	K1	6.3	12
HSMF-A203-A00J1	GaP Red	K2	8	16
	GaP Emerald Green	J1	4	8
HSMF-A204-A00J1	GaP Orange	K2	8	16
	GaP Yellow Green	L1	10	20
HSMF-A205-A00J1	GaP Orange	K2	8	16
	GaP Emerald Green	J1	4	8
HSMF-A206-A00J1	GaP Yellow	K2	8	16
	GaP Yellow Green	L1	10	20
HSMF-A211-A00J1	AlGaAs Red	L2	12.5	25
	GaP Yellow Green	L1	10	20
HSMF-A212-A00J1	AlGaAs Red	L2	12.5	25
	GaP Yellow	K1	6.3	12
HSMF-A222-A00J1	AlInGaP Red	P1	40	80
	AlInGaP Amberi	P1	40	80
HSMF-A226-A00J1	AlInGaP Amber	P2	50	100
	AlInGaP Yellow Green	M2	20	60

0.2W SMT White LED

Part Number	Package Dimensions	CCT (K)	Viewing Angle (°)	Min Flux (lm)	Max Flux (lm)	"Forward Voltage (Vf) If=60mA	Max Forward Curent (mA)
ASMD-FWG3-NMSA6	3.0 x 1.4 x 0.7	2700	120	18	28	3.02	90
ASMD-FWG3-NMSB6	3.0 x 1.4 x 0.7	3000	120	18	28	3.02	90
ASMD-FWG3-NPTC6	3.0 x 1.4 x 0.7	3500	120	20	30	3.02	90
ASMD-FWG3-NPTD6	3.0 x 1.4 x 0.7	4000	120	20	30	3.02	90
ASMD-FWG3-NPTE6	3.0 x 1.4 x 0.7	5000	120	20	30	3.02	90
ASMD-FWG3-NPTF6	3.0 x 1.4 x 0.7	5700	120	20	30	3.02	90
ASMD-FWG3-NPTG6	3.0 x 1.4 x 0.7	6200	120	20	30	3.02	90
ASMD-FWG3-NPTH6	3.0 x 1.4 x 0.7	6500	120	20	30	3.02	90
ASMD-FWG3-NPTJ6	3.0 x 1.4 x 0.7	6800	120	20	30	3.02	90
ASMW- FWG0-NJLH6	3.5 x 2.8 x 0.7	3000	120	20	26	3.11	100
ASMW- FWG0-NJLF6	3.5 x 2.8 x 0.7	4000	120	20	26	3.11	100
ASMW- FWG0-NJLB6	3.5 x 2.8 x 0.7	6500	120	20	26	3.11	100

0.5W SMT Mono Color LED

Part Number	Color	Package Dimensions	Dominant Wavelength λ_D [1] (nm)	Viewing Angle [2] (°)	Min. Flux (lm)	Max. Flux (lm)	Forward Voltage (V_F) I_F=150mA	Test Current (mA)
ASMT-QABD-AEF0E	Amber	2.8 x 3.5 x 1.9	593.1	120	11.5	25.5	2.5	150
ASMT-QABE-ANQ0E	Amber	2.8 x 3.5 x 1.9	593.1	120	19.6	26.9	2.25	150
ASMW-LA00-AUW0E	Amber	3.5 x 2.8 x 0.7	589	120	26	35	2.3	150
ASMT-QHBD-AFH0E	Red Orange	2.8 x 3.5 x 1.9	616.1	120	11.5	25.5	2.5	150
ASMT-QHBE-ANQ0E	Red Orange	2.8 x 3.5 x 1.9	616.1	120	19.6	26.9	2.25	150
ASMW-LH00-AUW0E	Red Orange	3.5 x 2.8 x 0.7	613	120	26	35	2.3	150
ASMT-QRBD-AEF0E	Red	2.8 x 3.5 x 1.9	621.1	120	11.5	25.5	2.5	150
ASMT-QRBE-ANQ0E	Red	2.8 x 3.5 x 1.9	621.1	120	19.6	26.9	2.25	150
ASMW-LR00-ASU0E	Red	3.5 x 2.8 x 0.7	623	120	21	29	2.3	150
ASMT-QBB3-NBD0E	Blue	2.8 x 3.5 x 1.9	460	120	5.5	11.5	3.5	150
ASMW-LM00-NGJ0E	Deep Blue	3.5 x 2.8 x 0.7	456	120	8	11	3.08	150
ASMT-QGBE-NGH0E	Green	2.8 x 3.5 x 1.9	522	120	19	33	3.6	150
ASMW-LG00-NWY0E	Green	3.5 x 2.8 x 0.7	529	120	32	41	3.16	150

Notes:
1. The dominant wavelength, λ_D, is derived from the CIE Chromaticity diagram and represents the color of the device.
2. $\theta_{1/2}$ is the off-axis angle where the luminous intensity is ½ the peak intensity.
3. Φ_V is the total luminous flux output as measured with an integrating sphere at mono pulse conditions.
4. Tolerance = ±12%.

0.5W SMT White LED

Part Number	Package Dimensions	CCT (K)	Viewing Angle [1] (°)	Min. Flux (lm)	Max. Flux (lm)	Forward Voltage (V_F) I_F=150mA	Max Forward Current (mA)
ASMD-LWG3-NPSAD	3.0 x 1.4 x 0.7	2700	120	20	28	2.99	200
ASMD-LWG3-NPSBD	3.0 x 1.4 x 0.7	3000	120	20	28	2.99	200
ASMD-LWG3-NQTCD	3.0 x 1.4 x 0.7	3500	120	22	30	2.99	200
ASMD-LWG3-NQTDD	3.0 x 1.4 x 0.7	4000	120	22	30	2.99	200
ASMD-LWG3-NQTED	3.0 x 1.4 x 0.7	5000	120	22	30	2.99	200
ASMD-LWG3-NQTFD	3.0 x 1.4 x 0.7	5700	120	22	30	2.99	200
ASMD-LWG3-NQTGD	3.0 x 1.4 x 0.7	6200	120	22	30	2.99	200
ASMD-LWG3-NQTHD	3.0 x 1.4 x 0.7	6500	120	22	30	2.99	200
ASMD-LWG3-NQTJD	3.0 x 1.4 x 0.7	6800	120	22	30	2.99	200
ASMF-LWG4-NQTAD	3.0 x 3.0 x 0.6	2700	120	22	30	2.9	240
ASMF-LWG4-NQTBD	3.0 x 3.0 x 0.6	3000	120	22	30	2.9	240
ASMF-LWG4-NRUCD	3.0 x 3.0 x 0.6	3500	120	24	32	2.9	240
ASMF-LWG4-NRUDD	3.0 x 3.0 x 0.6	4000	120	24	32	2.9	240
ASMF-LWG4-NRUED	3.0 x 3.0 x 0.6	5000	120	24	32	2.9	240
ASMF-LWG4-NRUFD	3.0 x 3.0 x 0.6	5700	120	24	32	2.9	240
ASMF-LWG4-NRUGD	3.0 x 3.0 x 0.6	6200	120	24	32	2.9	240
ASMF-LWG4-NRUHD	3.0 x 3.0 x 0.6	6500	120	24	32	2.9	240
ASMF-LWG4-NRUJD	3.0 x 3.0 x 0.6	6800	120	24	32	2.9	240

Notes:
1. 2. $\theta_{1/2}$ is the off-axis angle where the luminous intensity is ½ the peak intensity.
2. Tolerance = ±12%

High Brightness Tricolor PLCC4 & PLCC6

Part Number	Color	Package	Package Dimension	Viewing Angle (°)	Dominant Wavelength (nm)	Min Intensity (mcd) @ 20mA		Typ IV @ 20mA	Features
						Bin	mcd	mcd	
ASMB-BTE1-0B332	Red	PLCC-4	3.5x 2.8x 1.9	110	622	U1	450	630	Black Body White Reflector
	Green				529	W1	1125	1500	
	Blue				469	T1	285	350	
ASMB-BTE2-0C332	Red	PLCC-4	3.5 x 2.8 x 1.9	110	620	R2	140	240	Black Body White Reflector
	Green				522	V2	900	1100	
	Blue				468	S2	224	260	
ASMB-MTB0-0A302	Green	PLCC-4	3.5x 2.8x 1.9	115	625	U1	450	540	Black Surface
	Blue				530	W1	1125	1600	
	Blue				470	T1	285	350	
ASMB-MTB1-0A302	Red	PLCC-4	3.5x 2.8x 1.9	115	625	U1	450	540	Black Surface
	Green				530	W1	1125	1600	
	Blue				470	T1	285	350	
ASMB-MTC1-0A3A2	Red	PLCC-6	3.4 x 2.8 x 1.8	105	625	S1	180	280	Black Body
	Green				528	U2	560	850	
	Blue				470	R1	112.5	170	
ASMB-TTB0-0A3A2	Red	PLCC-6	3.5 x 3.5 x 2.8	115	621	U2	560	790	Black Surface
	Green				530	X1	1800	2400	
	Blue				470	T2	355	500	
ASMB-TTB2-0C3A2	Red	PLCC-6	3.5 x 3.5 x 2.8	115	621	U2	560	790	Black Surface
	Green				530	W2	1400	200	
	Blue				470	T1	285	380	
ASMT-YTB2-0BB02	Red	PLCC-6	3.4 x 2.8x 1.8	120	626	U2	560	745	Black Surface
	Green				525	W1	1125	1600	
	Blue				470	T1	285	380	
ASMT-YTB7-0AA02	Red	PLCC-6	3.4 x 2.8x 1.8	120	622	U2	560	650	Black Surface
	Green				530	W2	1400	1900	
	Blue				470	T1	285	384	
ASMT-YTC2-0BB02	Red	PLCC-6	3.4 x 2.8x 1.8	120	626	T2	355	450	Black Body
	Green				525	U1	450	560	
	Blue				470	R2	140	180	
ASMT-YTC7-0AA02	Red	PLCC-6	3.4 x 2.8x 1.8	110	622	S2	224	330	Black Body
	Green				530	U2	560	1125	
	Blue				470	R1	112.5	160	
ASMT-YTD2-0BB02	Red	PLCC-6	3.4 x 2.8x 1.8	120	626	U2	560	745	White Surface
	Green				525	W1	1125	1600	
	Blue				470	T1	285	380	
ASMT-YTD7-0AA02	Red	PLCC-6	3.4 x 2.8x 1.8	120	622	U2	560	650	White Surface
	Green				530	W1	1400	1900	
	Blue				470	T1	285	384	
ASMT-YTD9-0AA02	Red	PLCC-6	3.4 x 2.8x 1.8	120	626	U2	560	1125	White Surface
	Green				525	W2	1400	2850	
	Blue				470	T1	285	560	

Subminiature Tricolor PLCC4

Part Number	Color	Package	Package Dimension	Viewing Angle (°)	Dominant Wavelength (nm)	Min Intensity (mcd)	Typ IV (mcd)	Test Current (mA)	Features
ASMB-LTC1-0A3A5	Red	PLCC-4	2.1 x 2.1 x 1.0	105	621	52.0	62.0	5	Black Body
	Green				529	124.0	196.0	5	
	Blue				467	28.8	43.0	5	

High Brightness Tricolor DFN6

Part Number	Color	Package	Silicone/ Epoxy	Package Dimensions	ESD protection	Typical Intenisty (mcd)	Typical Chromaticity Coordinate	Test Curremt	Package appearance
ASMB-6WD0-0A101	RGB mix white	DFN6	Silicone	3.5 x 2.8 x 0.6	No	1900	0.3, 0.3	Red 14mA, Green 11mA. Blue 9mA	White
ASMB-6WZ0-0A101	RGB mix white	DFN6	Silicone	3.5 x 2.8 x 0.6	Yes	1900	0.3, 0.3	Red 14mA, Green 11mA. Blue 9mA	White
ASMB-6ED0-0A101	RGB mix white	DFN6	Epoxy	3.5 x 2.8 x 0.6	No	1900	0.3, 0.3	Red 14mA, Green 11mA. Blue 9mA	White
ASMB-6EZ0-0A101	RGB mix white	DFN6	Epoxy	3.5 x 2.8 x 0.6	Yes	1900	0.3, 0.3	Red 14mA, Green 11mA. Blue 9mA	White

PLCC-2 (ASMT-UWB1)

ASMT-UWB1-N X_2 X_3 X_4 2

- Color Bin
- Max Intensity Bin
- Min Intensity Bin

Color Bin Limits

Individual reel will contain parts from one sub bin only.

Sub Bin	Chromaticity Coordinates				
1A	x	0.2950	0.2920	0.2984	0.3009
	y	0.2970	0.3060	0.3133	0.3042
1B	x	0.2920	0.2895	0.2962	0.2984
	y	0.3060	0.3135	0.3220	0.3133
1C	x	0.2984	0.2962	0.3028	0.3048
	y	0.3133	0.3220	0.3304	0.3207
1D	x	0.2984	0.3048	0.3068	0.3009
	y				
2A	x	0.3048	0.3130	0.3144	0.3068
	y	0.3207	0.3290	0.3186	0.3113
2B	x	0.3028	0.3115	0.3130	0.3048
	y	0.3304	0.3391	0.3290	0.3207
2C	x	0.3115	0.3205	0.3213	0.3130
	y	0.3391	0.3481	0.3373	0.3290
2D	x	0.3130	0.3213	0.3221	0.3144
	y	0.3290	0.3373	0.3261	0.3186
3A	x	0.3215	0.3290	0.3290	0.3222
	y	0.3350	0.3417	0.3300	0.3243
3B	x	0.3207	0.3290	0.3290	0.3215
	y	0.3462	0.3538	0.3417	0.3350
3C	x	0.3290	0.3376	0.3371	0.3290
	y	0.3538	0.3616	0.3490	0.3417
3D	x	0.3290	0.3371	0.3366	0.3290
	y	0.3417	0.3490	0.3369	0.3300
4A	x	0.3371	0.3451	0.3440	0.3366
	y	0.3490	0.3554	0.3427	0.3369
4B	x	0.3376	0.3463	0.3451	0.3371
	y	0.3616	0.3687	0.3554	0.3490
4C	x	0.3463	0.3551	0.3533	0.3451
	y	0.3687	0.3760	0.3620	0.3554
4D	x	0.3451	0.3533	0.3515	0.3440
	y	0.3554	0.3620	0.3487	0.3427
5A	x	0.3530	0.3615	0.3590	0.3512
	y	0.3597	0.3659	0.3521	0.3465
5B	x	0.3548	0.3641	0.3615	0.3530
	y	0.3736	0.3804	0.3659	0.3597
5C	x	0.3641	0.3736	0.3702	0.3615
	y	0.3804	0.3874	0.3722	0.3659
5D	x	0.3615	0.3702	0.3670	0.3590
	y	0.3659	0.3722	0.3578	0.3521
6A	x	0.3670	0.3702	0.3825	0.3783
	y	0.3578	0.3722	0.3798	0.3646
6B	x	0.3702	0.3736	0.3869	0.3825
	y	0.3722	0.3874	0.3958	0.3798
6C	x	0.3825	0.3869	0.4006	0.3950
	y	0.3798	0.3958	0.4044	0.3875
6D	x	0.3783	0.3825	0.3950	0.3898
	y	0.3646	0.3798	0.3875	0.3716
7A	x	0.3889	0.3941	0.4080	0.4017
	y	0.3690	0.3848	0.3916	0.3751
7B	x	0.3941	0.3996	0.4146	0.4080
	y	0.3848	0.4015	0.4089	0.3916
7C	x	0.4080	0.4146	0.4299	0.4221
	y	0.3916	0.4089	0.4165	0.3984
7D	x	0.4017	0.4080	0.4221	0.4147
	y	0.3751	0.3916	0.3984	0.3814
8A	x	0.4147	0.4221	0.4342	0.4259
	y	0.3814	0.3984	0.4028	0.3853
8B	x	0.4221	0.4299	0.4430	0.4342
	y	0.3984	0.4165	0.4212	0.4028
8C	x	0.4342	0.4430	0.4562	0.4465
	y	0.4028	0.4212	0.4260	0.4071
8D	x	0.4259	0.4342	0.4465	0.4373
	y	0.3853	0.4028	0.4071	0.3893
9A	x	0.4373	0.4465	0.4582	0.4483
	y	0.3893	0.4071	0.4099	0.3919
9B	x	0.4465	0.4562	0.4687	0.4582
	y	0.4071	0.4260	0.4289	0.4099
9C	x	0.4582	0.4687	0.4813	0.4700
	y	0.4099	0.4289	0.4319	0.4126
9D	x	0.4483	0.4582	0.4700	0.4593
	y	0.3919	0.4099	0.4126	0.3944

Intensity Bin Limits

Bin ID	Min. (mcd)	Max. (mcd)
X1	1800	2240
X2	2240	2850
Y1	2850	3550
Y2	3550	4500
Z1	4500	5600
Z2	5600	7150

Tolerance of each bin it = ± 12%

Intensity Bin Select (X_2X_3)

Individual reel will contain parts from one half bin only.

X_2	Minimum Iv Bin
X_3	Maximum Iv Bin
0	Full Distribution
3	3 half bins starting from $X_2$1
4	4 half bins starting from $X_2$1
5	5 half bins starting from $X_2$1
7	3 half bins starting from $X_2$2
8	4 half bins starting from $X_2$2
9	5 half bins starting from $X_2$2

Color Bin Limits

Individual reel will contain parts from one sub bin only.

Bin	Sub Bin
A	1A, 1B, 1C, 1D
B	2A, 2B, 2C, 2D
C	3A, 3B, 3C, 3D
D	4A, 4B, 4C, 4D
E	5A, 5B, 5C, 5D
F	6A, 6B, 6C, 6D
G	7A, 7B, 7C, 7D
H	8A, 8B, 8C, 8D
J	9A, 9B, 9C, 9D
K	1A, 1B, 1C, 1D, 2A, 2B, 2C, 2D
L	2A, 2B, 2C, 2D, 3A, 3B, 3C, 3D
M	3A, 3B, 3C, 3D, 4A, 4B, 4C, 4D
N	4A, 4B, 4C, 4D, 5A, 5B, 5C, 5D
P	5A, 5B, 5C, 5D, 6A, 6B, 6C, 6D
R	7A, 7B, 7C, 7D, 8A, 8B, 8C, 8D
S	8A, 8B, 8C, 8D, 9A, 9B, 9C, 9D
0	1A,1B,1C,1D, 2A, 2B, 2C, 2D, 3A, 3B, 3C, 3D, 4A, 4B, 4C, 4D, 5A, 5B, 5C, 5D
1	6A, 6B, 6C, 6D, 7A, 7B, 7C, 7D, 8A, 8B, 8C, 8D, 9A, 9B, 9C, 9D

Forward Voltage Bin

Bin	Min (V)	Max (V)
F03	2.4	2.6
F04	2.6	2.8
F05	2.8	3
F06	3.2	3.2

Tolerance ± 0.1V

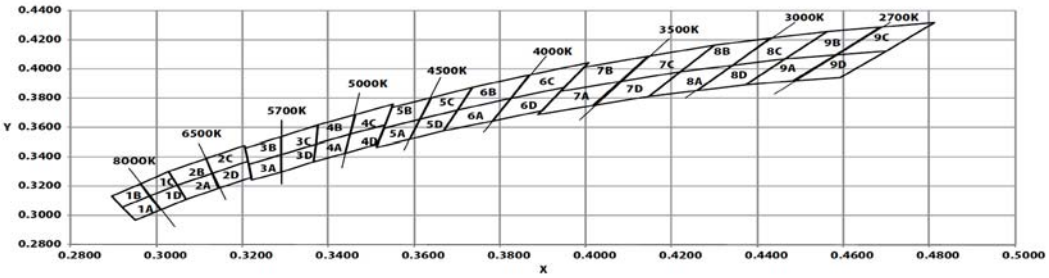

PLCC2, Power PLCC-4, Bicolor PLCC-4 and Tricolor PLCC-4

HSMx-Axxx-X_1-X_2-X_3-X_4-X_5

- Packaging option
- Color bin selection
- Intensity bin selection

Intensity Bin Select (X_1X_2)

Individual reel will contain parts from 1 half bin only.
Single color (see data sheet for bicolor and tricolor).

X_1	Minimum Iv Bin
X_2	Number of half Bins
0	Full Distribution
2	2 half bins starting from $X_5$1
3	3 half bins starting from $X_5$1
4	4 half bins starting from $X_5$1
5	5 half bins starting from $X_5$1
6	2 half bins starting from $X_5$2
7	3 half bins starting from $X_5$2
8	4 half bins starting from $X_5$2
9	5 half bins starting from $X_5$2

Color Bin Selection (X_3)

Individual reel will contain parts from 1 full bin only.
Single color (see data sheet for bicolor and tricolor).

X_3	
0	Full Distribution
Z	A and B only
Y	B and C only
W	C and D only
V	D and E only
U	E and F only
T	F and G only
S	G and H only
Q	A, B and C only
P	B, C and D only
N	C, D and E only
M	D, E and F only
L	E, F and G only
K	F, G and H only
1	A, B, C and D only
2	E, F G and H only
3	B, C, D and E only
4	C, D, E and F only
5	A, B, C, D and E only
6	B, C, D, E and F only

Color Bin Limits for HSMW-Axxx

Bin ID	Limits (Chromaticity Coordinates)				
A	X	0.352	0.365	0.365	0.352
	Y	0.377	0.395	0.360	0.341
B	X	0.340	0.352	0.352	0.340
	Y	0.360	0.377	0.341	0.325
C	X	0.327	0.340	0.340	0.327
	Y	0.342	0.360	0.325	0.306
D	X	0.315	0.327	0.327	0.315
	Y	0.325	0.342	0.306	0.290
E	X	0.302	0.315	0.315	0.302
	Y	0.307	0.325	0.290	0.271
F	X	0.290	0.302	0.302	0.290
	Y	0.290	0.307	0.271	0.255

Tolerance of each bin limit = ± 0.02

Intensity Bin Limits

Bin ID	Intensity (mcd)	
	Min.	Max.
J1	4.50	5.60
J2	5.60	7.20
K1	7.20	9.00
K2	9.00	11.20
L1	11.20	14.00
L2	14.00	18.00
M1	18.00	22.40
M2	22.40	28.50
N1	28.50	35.50
N2	35.50	45.00
P1	45.00	56.00
P2	56.00	71.50
Q1	71.50	90.00
Q2	90.00	112.50
R1	112.50	140.00
R2	140.00	180.00
S1	180.00	224.00
S2	224.00	285.00
T1	285.00	355.00
T2	355.00	450.00
U1	450.00	560.00
U2	560.00	715.00
V1	715.00	900.00
V2	900.00	1125.00
W1	1125.00	1400.00
W2	1400.00	1800.00
X1	1800.00	2240.00
X2	2240.00	2850.00
Y1	2850.00	3550.00
Y2	3550.00	4500.00
Z1	4500.00	5600.00
Z2	5600.00	7150.00
11	7150.00	9000.00
12	9000.00	11250.00
21	11250.00	14000.00
22	14000.00	18000.00

Tolerance of each bin limit = ± 12%

Color Coordinates Chart for HSMW-Axxx

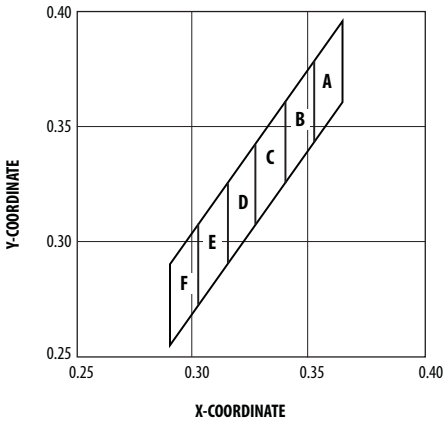

Color Bin Limits

Color/Bin	Wavelength (nm)	
	Min.	Max.
Blue		
A	460.0	465.0
B	465.0	470.0
C	470.0	475.0
D	475.0	480.0
Cyan		
A	490.0	495.0
B	495.0	500.0
C	500.0	505.0
D	505.0	510.0
Green		
A	515.0	520.0
B	520.0	525.0
C	525.0	530.0
D	530.0	535.0
Yellow Green/Emerald Green		
A	552.5	555.5
B	555.5	558.5
C	558.5	561.5
D	561.5	564.5
E	564.5	567.5
F	567.5	570.5
G	570.5	573.5
H	573.5	576.5
Amber		
A	582.0	584.5
B	584.5	587.0
C	587.0	589.5
D	589.5	592.0
E	592.0	594.5
F	594.5	597.0
Orange		
A	597.0	600.0
B	600.0	603.0
C	603.0	606.0
D	606.0	609.0
E	609.0	612.0
Red Orange		
A	611.0	616.0
B	616.0	620.0
Red		
Full Distribution	620i	635

Tolerance of each bin limit = ± 1nm

Tricolor/Power PLCC-4

1	Cathode (Color 1)
2	Common Anode
3	Cathode (Color 3)
4	Cathode (Color 2)

Bicolor PLCC-4

1	Cathode (Color 1)
2	Anode (Color 1)
3	Cathode (Color 2)
4	Anode (Color 2)

ASMD-FWG3-Nxxx6

Part Numbering System

A	S	M	B	-	F	W	x1	3	-	N	X_2	X_3	X_4	X_5

Code	Description	Option	
X_1	Color Rendering Index	G	CRI ≥ 80
X_2	Minimum flux bin	M	18 – 19 lm
		N	19 – 20 lm
		P	20 -22 lm
		Q	22 – 24 lm
X_3	Maximum flux bin	R	24 – 26 lm
		S	26 – 28 lm
		T	28 – 30 lm
X_4	Color Bin	A	2700K
		B	3000K
		C	3500K
		D	4000K
		E	5000K
		F	5700K
		G	6200K
		H	6500K
		J	6800K
x_5	Test Option	6	Test current = 60 mA

Example: ASMD-FWG3-NMSB6

X_1 = G CRI ≥ 80
X_2 = Q Minimum flux bin M
X_3 = T Maximum flux bin 5
X_4 = B Color bin 3000K with bin ID 29S
X_5 = D Test current = 60 mA

Bin Information

Forward Voltage Bin (VF) Limits

Bin ID	Forward Voltage, VF (V) at 65 mA	
	Min.	Max.
G03	2.8	2.9
G04	2.9	3.0
G05	3.0	3.1
G06	3.1	3.2
G07	3.2	3.3

Tolerance: ±0.1 V

ExampleExample of bin information on reel and packaging label:

CAT: Q Flux bin Q
BIN: 29S Bin ID 29S
VF: G05 VF bin G05

Flux Bin (CAT) Limits

Bin ID	Luminous Flux, ΦV (lm) at 65 mA	
	Min.	Max.
Q	22	24
R	24	26
S	26	28
T	28	30
U	30	32

Tolerance: ±12 %

Chromaticity Diagram

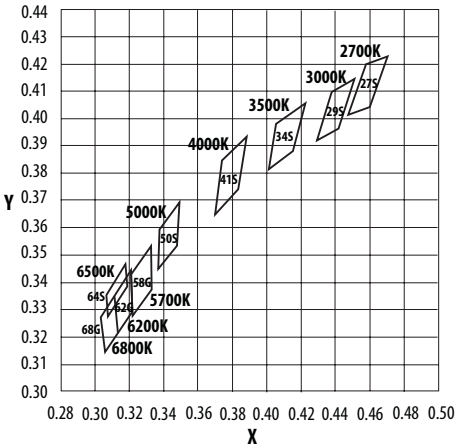

Color Bin (BIN) Limits

CCT	Chromaticity Coordinates		
	Bin ID	x	y
2700	27S	0.4475	0.4012
		0.4582	0.4199
		0.4708	0.4228
		0.4598	0.4041
3000	29S	0.4295	0.3918
		0.4381	0.4097
		0.4515	0.4145
		0.4420	0.3962
3500	34S	0.4006	0.3811
		0.4061	0.3980
		0.4226	0.4056
		0.4150	0.3881
4000	41S	0.3699	0.3646
		0.3743	0.3846
		0.3885	0.3934
		0.3835	0.3741
5000	505	0.3372	0.3449
		0.3378	0.3596
		0.3496	0.3694
		0.3478	0.3533
5700	58G	0.3220	0.3280
		0.3209	0.3425
		0.3330	0.3533
		0.3329	0.3375
6200	62G	0.3133	0.3214
		0.3113	0.3350
		0.3208	0.3444
		0.3219	0.3296
6500	64S	0.3079	0.3274
		0.3068	0.3354
		0.3181	0.3467
		0.3192	0.3387
6800	68G	0.3061	0.3145
		0.3035	0.3272
		0.3113	0.3350
		0.3133	0.3214

Tolerance ±0.01

ASMD-LWG3-NxxxD

Part Numbering System

A	S	M	B	-	L	W	x1	3	-	N	X_2	X_3	X_4	X_5

Code	Description	Option	
X_1	Color Rendering Index	G	CRI ≥ 80
X_2	Minimum flux bin	P	20 – 22 lm
		Q	22 – 24 lm
		R	24 – 26 lm
		S	26 – 28 lm
X_3	Maximum flux bin	R	24 – 26 lm
		S	26 – 28 lm
		T	28 – 30 lm
X_4	Color Bin	A	2700K
		B	3000K
		C	3500K
		D	4000K
		E	5000K
		F	5700K
		G	6200K
		H	6500K
		J	6800K
x_5	Test Option	6	Test current = 65 mA

Example: ASMD-FWG3-NMSB6

X_1 = G CRI ≥ 80
X_2 = Q Minimum flux bin Q
X_3 = T Maximum flux bin T
X_4 = B Color bin 3000K with bin ID 29S
X_5 = D Test current = 65 mA

Bin Information

Forward Voltage Bin (VF) Limits

Bin ID	Forward Voltage, VF (V) at 65 mA	
	Min.	Max.
G03	2.8	2.9
G04	2.9	3.0
G05	3.0	3.1
G06	3.1	3.2
G07	3.2	3.3

Tolerance: ±0.1 V

ExampleExample of bin information on reel and packaging label:

CAT: Q Flux bin Q
BIN: 29S Bin ID 29S
VF: G05 VF bin G05

Flux Bin (CAT) Limits

Bin ID	Luminous Flux, Φv (lm) at 65 mA	
	Min.	Max.
Q	22	24
R	24	26
S	26	28
T	28	30
U	30	32

Tolerance: ±12 %

Chromaticity Diagram

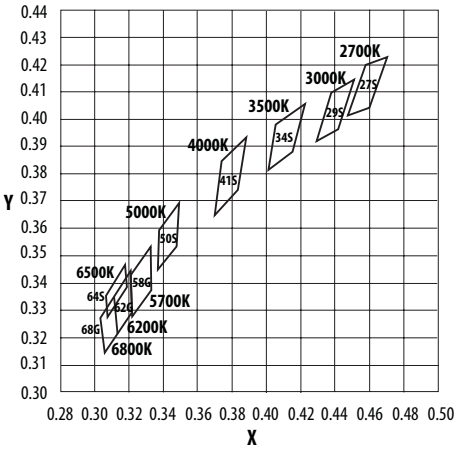

Color Bin (BIN) Limits

CCT	Chromaticity Coordinates		
	Bin ID	x	y
2700	27S	0.4475	0.4012
		0.4582	0.4199
		0.4708	0.4228
		0.4598	0.4041
3000	29S	0.4295	0.3918
		0.4381	0.4097
		0.4515	0.4145
		0.4420	0.3962
3500	34S	0.4006	0.3811
		0.4061	0.3980
		0.4226	0.4056
		0.4150	0.3881
4000	41S	0.3699	0.3646
		0.3743	0.3846
		0.3885	0.3934
		0.3835	0.3741
5000	505	0.3372	0.3449
		0.3378	0.3596
		0.3496	0.3694
		0.3478	0.3533
5700	58G	0.3220	0.3280
		0.3209	0.3425
		0.3330	0.3533
		0.3329	0.3375
6200	62G	0.3133	0.3214
		0.3113	0.3350
		0.3208	0.3444
		0.3219	0.3296
6500	64S	0.3079	0.3274
		0.3068	0.3354
		0.3181	0.3467
		0.3192	0.3387
6800	68G	0.3061	0.3145
		0.3035	0.3272
		0.3113	0.3350
		0.3133	0.3214

Tolerance ±0.01

ASMF-LWG4-NxxxD

Part Numbering System

A	S	M	B	-	L	W	x1	0	-	N	X_2	X_3	X_4	X_5

Code	Description	Option	
X_1	Color Rendering Index	G	CRI ≥ 80
X_2	Minimum flux bin	Q	20 – 22 lm
X_3	Maximum flux bin	R	22 – 24 lm
		S	24 – 26 lm
		T	26 – 28 lm
		U	30 – 32 lm
X_4	Color Bin	A	2700K
		B	3000K
		C	3500K
		D	4000K
		E	5000K
		F	5700K
		G	6200K
		H	6500K
		J	6800K
X_5	Test Option	6	Test current = 65 mA

Example: ASMD-FWG3-NMSB6

X_1 = G CRI ≥ 80
X_2 = Q Minimum flux bin Q
X_3 = T Maximum flux bin T
X_4 = B Color bin 3000K with bin ID 29S
X_5 = D Test current = 65 mA

Bin Information

Forward Voltage Bin (VF) Limits

Bin ID	Forward Voltage, VF (V) at 65 mA	
	Min.	Max.
G01	2.6	2.7
G02	2.7	2.8
G03	2.8	2.9
G04	2.9	3.0
G05	3.0	3.1

Tolerance: ±0.1 V

ExampleExample of bin information on reel and packaging label:

CAT: Q Flux bin Q
BIN: 29S Bin ID 29S
VF: G05 VF bin G05

Flux Bin (CAT) Limits

Bin ID	Luminous Flux, ΦV (lm) at 65 mA	
	Min.	Max.
Q	22	24
R	24	26
S	26	28
T	28	30
U	30	32

Tolerance: ±12 %

Chromaticity Diagram

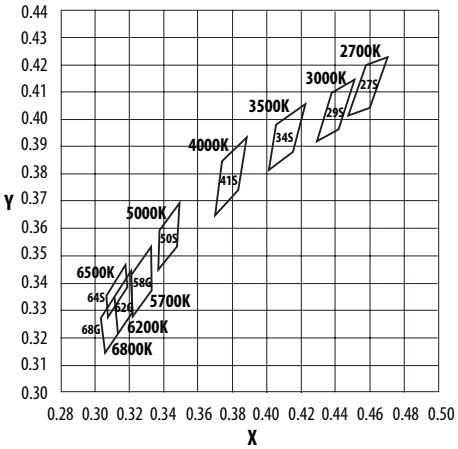

Color Bin (BIN) Limits

CCT	Chromaticity Coordinates		
	Bin ID	x	y
2700	27S	0.4475	0.4012
		0.4582	0.4199
		0.4708	0.4228
		0.4598	0.4041
3000	29S	0.4295	0.3918
		0.4381	0.4097
		0.4515	0.4145
		0.4420	0.3962
3500	34S	0.4006	0.3811
		0.4061	0.3980
		0.4226	0.4056
		0.4150	0.3881
4000	41S	0.3699	0.3646
		0.3743	0.3846
		0.3885	0.3934
		0.3835	0.3741
5000	505	0.3372	0.3449
		0.3378	0.3596
		0.3496	0.3694
		0.3478	0.3533
5700	58G	0.3220	0.3280
		0.3209	0.3425
		0.3330	0.3533
		0.3329	0.3375
6200	62G	0.3133	0.3214
		0.3113	0.3350
		0.3208	0.3444
		0.3219	0.3296
6500	64S	0.3079	0.3274
		0.3068	0.3354
		0.3181	0.3467
		0.3192	0.3387
6800	68G	0.3061	0.3145
		0.3035	0.3272
		0.3113	0.3350
		0.3133	0.3214

Tolerance ±0.01

ASMW-FWG0-Nxxx6

Part Numbering System

A	S	M	W	-	F	W	x1	0	-	N	X_2	X_3	X_4	X_5

Code	Description	Option		Sub Bins
X_1	Color Rendering Index	G	CRI ≥ 80	
X_2	Minimum flux bin	H	19.0 - 20.0lm	
X_3	Maximum flux bin	J	20.0 - 22.0lm	
		K	22.0 - 24.0lm	
		L	24.0 - 26.0lm	
X_4	Color Bin	H	3000K	8A, 8B, 8C, 8D
		F	4000K	6A, 6B, 6C, 6D
		B	6500K	2A, 2B, 2C, 2D
X_5	Test Option	6	Test current = 60 mA	

Example: ASMW-FWG0-NHKH6

X_1 = G CRI ≥ 80
X_2 = H Minimum flux bin H
X_3 = K Maximum flux bin K
X_4 = H 3000K with sub bins 8A, 8B, 8C, 8D
X_5 = 6 Test current = 60 mA

Bin Information

Forward Voltage Bin (VF) Limits

Bin ID	Forward Voltage, VF (V) at 65 mA	
	Min.	Max.
G03	2.8	2.9
G04	2.9	3.0
G05	3.0	3.1
G06	3.1	3.2
G07	3.2	3.3

Tolerance: ±0.1 V

Flux Bin (CAT) Limits

Bin ID	Luminous Flux (lm)	
	Min.	Max.
H	19.0	20.0
J	20.0	22.0
K	22.0	24.0
L	24.0	26.0

Tolerance: ±12 %

Color Bins (BIN)

CCT	Bin ID	Cx	Cy
3000K	8A	0.1686	0.6821
		0.1097	0.8067
		0.1329	0.7983
		0.1856	0.6759
	8B	0.1856	0.6759
		0.1329	0.7983
		0.1561	0.7865
		0.2027	0.6673
	8C	0.2027	0.6673
		0.1561	0.7865
		0.1784	0.7734
		0.2192	0.6576
	8D	0.4259	0.3853
		0.4342	0.4028
		0.4465	0.4071
		0.4373	0.3893
4000K	6A	0.3670	0.3578
		0.3702	0.3722
		0.3825	0.3798
		0.3783	0.3646
	6B	0.3702	0.3722
		0.3736	0.3874
		0.3869	0.3958
		0.3825	0.3798
	6C	0.3825	0.3798
		0.3869	0.3958
		0.4006	0.4044
		0.3950	0.3875
	6D	0.3783	0.3646
		0.3825	0.3798
		0.3950	0.3875
		0.3898	0.3716

Color Bins (BIN) cont.

CCT	Bin ID	Cx	Cy
6500K	2A	0.3048	0.3207
		0.3130	0.3290
		0.3144	0.3186
		0.3068	0.3113
	2B	0.3028	0.3304
		0.3115	0.3391
		0.3130	0.3290
		0.3048	0.3207
	2C	0.3115	0.3391
		0.3205	0.3481
		0.3213	0.3373
		0.3130	0.3290
	DD	0.3130	0.3290
		0.3213	0.3373
		0.3221	0.3261
		0.3144	0.3186

Tolerance ±0.01

ExampleExample of bin information on reel and packaging label:

CAT: J Flux bin J
BIN: 2A Color sub-bin 2A
VF: G05 VF bin G03

Chromaticity Diagram (3000K , 4000K and 6500K)

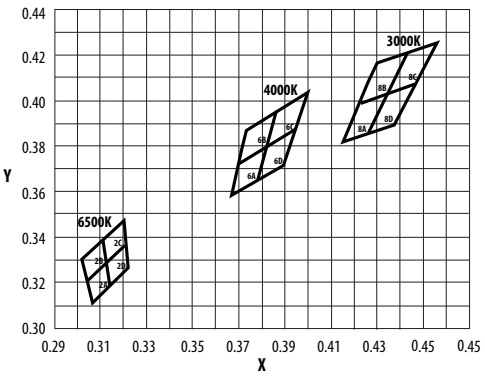

PLCC Surface Mount LEDs

ASMT-SWBM-N X_2-X_3-X_4-X_5

- X_5 — Packaging option
- X_4 — Color bin selection
- X_2, X_3 — Intensity bin selection

Intensity Bin Selection (X_2X_3)

Individual reel will contain parts from one half bin only.

X_2	Minimum I_V Bin
X_3	Number of half bins
0	Full Distribution
2	2 half bins starting from $X_2$1
3	3 half bins starting from $X_2$1
4	4 half bins starting from $X_2$1
5	5 half bins starting from $X_2$1
6	2 half bins starting from $X_2$2
7	3 half bins starting from $X_2$2
8	4 half bins starting from $X_2$2
9	5 half bins starting from $X_2$2

Intensity Bin Limits

Bin ID	Min. (mcd)	Max. (mcd)
N1	28.50	35.50
N2	35.50	45.00
P1	45.00	56.00
P2	56.00	71.50
Q1	71.50	90.00
Q2	90.00	112.50
R1	112.50	140.00
R2	140.00	180.00
S1	180.00	224.00
S2	224.00	285.00
T1	285.00	355.00
T2	355.00	450.00
U1	450.00	560.00
U2	560.00	715.00
V1	715.00	900.00
V2	900.00	1125.00
W1	1125.00	1400.00
W2	1400.00	1800.00

Tolerance of each bin limit = ± 12%

Long Life PLCC-4 ASMT-SWBM Packaging Option (X_4X_5)

X_4X_5	Test Current	Package Type	Reel Size
M1	50 mA	Top Mount	7/13 Inch
M2	30 mA	Top Mount	7/13 Inch
J1	20 mA	Top Mount	7 Inch
J4	20 mA	Top Mount	13 Inch
H1	20 mA	Reverse Mount	7 Inch
H4	20 mA	Reverse Mount	13 Inch

Color Bin Selection (X_4)

Individual reel will contain parts from one full bin only.

X_4	Color Bin Selection
0	Full Distributon
A	1 and 2 only
B	2 and 3 only
C	3 and 4 only
D	4 and 5 only
E	5 and 6 only
F	6 and 7 only
G	1, 2 and 3 only
H	2, 3 and 4 only
J	3, 4 and 5 only
K	4, 5 and 6 only
L	5, 6 and 7 only
M	1, 2, 3 and 4 only
N	2, 3, 4 and 5 only
P	3, 4, 5 and 6 only
Q	4, 5, 6 and 7 only
R	1, 2, 3, 4 and 5 only
S	2, 3, 4, 5 and 6 only
T	3, 4, 5, 6, and 7 only
U	1, 2, 3, 4, 5 and 6 only
V	2, 3, 4, 5,6 and 7 only
Z	Special Color Bin

Packaging Option (X_5)

X_5	Test Current	Package Type	Reel Size
3	30 mA	Top Mount	7 inch

V_F Bin Limits

Bin ID	Min.	Max.
S3	3.20	3.80
S4	3.80	4.35

Tolerance of each bin limit = ± 0.1V

Color Bin Limits

Bin ID	Limits (Chromaticity Coordinates)				
1	x	0.296	0.291	0.310	0.313
	y	0.259	0.268	0.297	0.284
2	x	0.291	0.285	0.307	0.310
	y	0.268	0.279	0.312	0.297
3	x	0.313	0.310	0.330	0.330
	y	0.284	0.297	0.330	0.310
4	x	0.310	0.307	0.330	0.330
	y	0.297	0.312	0.347	0.330
5	x	0.330	0.330	0.338	0.352
	y	0.310	0.330	0.342	0.344
6	x	0.330	0.330	0.347	0.345
	y	0.330	0.347	0.371	0.352
7	x	0.352	0.338	0.364	0.360
	y	0.344	0.342	0.380	0.357
8	x	0.345	0.347	0.367	0.364
	y	0.352	0.371	0.401	0.380

Tolerance of each bin limit = ± 0.02

Color Coordinates Chart for ASMT-SWBM

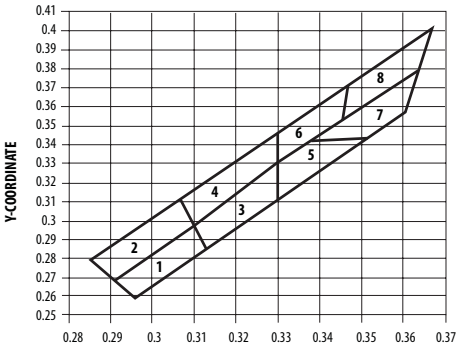

High Brightness Tricolor PLCC-4 and PLCC-6

ASMT-xTxx-0 X_2-X_3-X_4-X_5

- X_5: Packaging option
- X_4: Color bin selection
- X_2: Intensity bin selection

For ASMB-BTE1

X_2	Min Iv Bin (Minimum Intensity Bin)		
	Red	Green	Blue
B	U1	W1	T1

For ASMB-MTB0/MTB1

X_2	Min Iv Bin (Minimum Intensity Bin)		
	Red	Green	Blue
A	U1	W1	T1

For ASMB-MTC1

X_2	Min Iv Bin (Minimum Intensity Bin)		
	Red	Green	Blue
A	S1	U2	R1

For ASMB-TTB0/TTB2

X_2	Min Iv Bin (Minimum Intensity Bin)		
	Red	Green	Blue
A	U2	X1	T2
C	U2	W2	T1

For ASMT-YTB2/YTD2

X_2	Min Iv Bin (Minimum Intensity Bin)		
	Red	Green	Blue
B	U2	W1	T1

For ASMT-YTC2

X_2	Min Iv Bin (Minimum Intensity Bin)		
	Red	Green	Blue
A	T2	U1	R2

For ASMT-YTB7/D7

X_2	Min Iv Bin (Minimum Intensity Bin)		
	Red	Green	Blue
A	U2	W2	T1

For ASMT-YTC7

X_2	Min Iv Bin (Minimum Intensity Bin)		
	Red	Green	Blue
A	S2	U2	R1

For ASMB-BTE1 /MTB0/MTB1/TTB0/TTB2

X_3	Number of Half Bin from X2		
	Red	Green	Blue
3	3	3	3

For ASMT-YTB2/YTD2

X_3	Number of Half Bin from X2		
	Red	Green	Blue
B	3	3	3

For ASMT-YTC2/YTB7/YTD7/YTC7

X_3	Number of Half Bin from X2		
	Red	Green	Blue
A	3	3	3

Intensity Bin Limits

Bin ID	Min (mcd)	Max (mcd)
R1	112.5	140
R2	140	180
S1	180	224
S2	224	285
T1	285	355
T2	355	450
U1	450	560
U2	560	715
V1	715	900
V2	900	1125
W1	1125	1400
W2	1400	1800
X1	1800	2240
X2	2250	2850
Y1	2850	3550

Tolerance of each bin limit = ± 12%

Color Bin Selection (X_4) For ASMB-MTB0/MTB1

X_4	Color Bin Combination		
	Red	Green	Blue
A	Full Distribution	A,B,D	A,B,C

For ASMB-BTE1

X_4	Color Bin Combination		
	Red	Green	Blue
3	Full Distribution	A,B,D	A,B,C

Color Bin Selection (X_4) For ASMB-TTB0/TTB2

X_4	Color Bin Combination		
	Red	Green	Blue
A	Full distribution	E,A,B	A,B,C

For ASMT-YTB2/YTC2/YTD2

X_4	Color Bin Combination		
	Red	Green	Blue
0	Full distribution	A,B,C	A,B,C,D,E

For ASMT-YTB7/YTC7/YTD7

X_4	Color Bin Combination		
	Red	Green	Blue
0	Full distribution	A,B,C	A,B,C,D

For ASMB-6Wx0/6Ex0

X_2	Intensity Bin Range
A	1600- 2600
X_3	Number of intensity bin
1	1
	Color bin
0	Full dsitribution
X_4	Test Current
1	Red 14mA, Green 11mA, Blue 9mA

Note: please refer to respective datasheet for color bin limits information

Packaging Option (X5):Please refer to respective data sheet for related information.

Super 0.5W Power PLCC-4

ASMT-QxBx-0 X_2-X_3-X_4-X_5

- Packaging option
- Color bin selection
- Intensity bin selection

Flux Bin Selection (X_2X_3)

Individual reel will contain parts from one bin only.

X_2	Min Flux Bin
X_3	Max Flux Bin

Flux Bin Limits

Bin ID	Min. (lm)	Max. (lm)
0	3.40	4.30
A	4.30	5.50
B	5.50	7.00
C	7.00	9.00
D	9.00	11.50
E	11.50	15.00
F	15.00	19.50
G	19.50	25.50
H	25.50	33.00
J	33.00	43.00
K	43.00	56.00
L	56.00	73.00

Tolerance of each bin limit = ± 12%

V_F Binning for AlInGaP Devices (ASMT-QAxx/QHxx/QRxx)

Bin ID	Min.	Max.
2D	2.35	2.50
2E	2.50	2.65
2F	2.65	2.80
2G	2.80	2.95
2H	2.95	3.10
2J	3.10	3.25
2K	3.25	3.40
2L	3.40	3.55
2M	3.55	3.70
2N	3.70	3.85

Tolerance of each bin limit = ± 0.1V

Color Bin Selection (X_4)

Individual reel will contain parts from one full bin only.

X_4	
0	Full Distribution
A	1 and 2 only
B	2 and 3 only
C	3 and 4 only
D	4 and 5 only
E	5 and 6 only
G	1, 2 and 3 only
H	2, 3 and 4 only
J	3, 4 and 5 only
K	4, 5 and 6 only
M	1, 2, 3 and 4 only
N	2, 3, 4 and 5 only
P	3, 4, 5 and 6 only
R	1, 2, 3, 4 and 5 only
S	2, 3, 4, 5 and 6 only
Z	Special Color Bin

V_F Bin Limits for InGaN Devices (ASMT-QBxx/QGxx)

Bin ID	Min.	Max.
S5	3.20	3.50
S6	3.50	3.80
S7	3.80	4.10

Tolerance of each bin limit = ± 0.1V

Color Bin Limits

Color/Bin	Wavelength (nm)	
	Min.	Max.
Blue		
1	460.0	465.0
2	465.0	470.0
8	450.0	455.0
9	455.0	460.0
Green		
1	515.0	520.0
2	520.0	525.0
3	525.0	530.0
4	530.0	535.0
Amber		
2	583.0	586.0
3	586.0	589.0
4	589.0	592.0
5	592.0	595.0
6	595.0	598.0
Red Orange		
1	611.0	616.0
2	616.0	620.0
3	620.0	625.0
Red		
Full Distribution	620.0	635.0

Tolerance of each bin limit = ±1nm

Packaging Option (X_5)

X_5	Test Current)	Package Type	Reel Size
E	150 mA	Top Mount	7 inch

Super 0.5W White Power PLCC-4

ASMT-QxBx-0 X_2-X_3-X_4-X_5

- Packaging option
- Color bin selection
- Flux bin selection

Flux Bin Selection (X_2X_3)

Individual reel will contain parts from one bin only

X_2	Min Flux Bin
X_3	Min Flux Bin

Flux Bin Limits

Bin ID	Min. (lm)	Max. (lm)
0	3.40	4.30
A	4.30	5.50
B	5.50	7.00
C	7.00	9.00
D	9.00	11.50
E	11.50	15.00
F	15.00	19.50
G	19.50	25.50
H	25.50	33.00
J	33.00	43.00
K	43.00	56.00
L	56.00	73.00

Tolerance of each bin limit = ± 12%

Color Bin Selection (X_4) for ASMT-QWBx

Individual reel will contain parts from one sub bin only.

X_4	
0	Full Distribution
A	5K and 5L only
B	6K and 6L only
C	7K and 7L only
D	8K and 8L only
E	5K and 6K only
F	5L and 6L only
G	6K and 7K only
H	6L and 7L onlyi
J	7K and 8K only
K	7L and 8L only
L	5K, 5L, 6K and 6L only
M	6K, 6L, 7K and 7L only
N	7K, 7L, 8K and 8L only
Z	Special binning

Color Bin Limits for ASMT-QWBx

Bin ID	Sub Bin ID	Limits (Chromaticity Coordinates)				
5K	5Ka	x	0.296	0.304	0.302	0.294
		y	0.259	0.270	0.276	0.264
	5Kb	x	0.294	0.302	0.300	0.291
		y	0.264	0.276	0.281	0.268
	5Kc	x	0.304	0.313	0.312	0.302
		y	0.270	0.284	0.291	0.276
	5Kd	x	0.302	0.312	0.310	0.300
		y	0.276	0.291	0.297	0.281
5L	5La	x	0.291	0.300	0.298	0.288
		y	0.268	0.281	0.288	0.274
	5Lb	x	0.288	0.298	0.295	0.285
		y	0.274	0.288	0.294	0.279
	5Lc	x	0.300	0.310	0.309	0.298
		y	0.281	0.297	0.305	0.288
	5Ld	x	0.298	0.309	0.307	0.295
		y	0.288	0.305	0.312	0.294
6K	6Ka	x	0.313	0.322	0.321	0.312
		y	0.284	0.297	0.305	0.291
	6Kb	x	0.312	0.321	0.320	0.310
		y	0.291	0.305	0.314	0.297
	6Kc	x	0.322	0.330	0.330	0.321
		y	0.297	0.310	0.320	0.305
	6Kd	x	0.321	0.330	0.330	0.320
		y	0.305	0.320	0.330	0.314

Tolerance of each bin limit = ± 0.02

Color Bin Limits cont.

Bin ID	Sub Bin ID	Limits (Chromaticity Coordinates)				
6L	6La	x	0.310	0.320	0.319	0.309
		y	0.297	0.314	0.322	0.305
	6Lb	x	0.309	0.319	0.318	0.307
		y	0.305	0.322	0.329	0.312
	6Lc	x	0.320	0.330	0.330	0.319
		y	0.314	0.330	0.339	0.322
	6Ld	x	0.319	0.330	0.330	0.318
		y	0.322	0.339	0.347	0.329
7K	7Ka	x	0.330	0.336	0.337	0.330
		y	0.310	0.320	0.330	0.320
	7Kb	x	0.330	0.337	0.337	0.330
		y	0.320	0.330	0.341	0.330
	7Kc	x	0.336	0.343	0.344	0.337
		y	0.320	0.331	0.341	0.330
	7Kd	x	0.337	0.344	0.345	0.337
		y	0.330	0.341	0.352	0.341
7L	7La	x	0.330	0.337	0.337	0.330
		y	0.330	0.341	0.349	0.339
	7Lb	x	0.330	0.337	0.338	0.330
		y	0.339	0.349	0.358	0.347
	7Lc	x	0.337	0.345	0.346	0.337
		y	0.341	0.352	0.362	0.349
	7Ld	x	0.337	0.346	0.347	0.338
		y	0.349	0.362	0.371	0.358
8K	8Ka	x	0.343	0.351	0.352	0.344
		y	0.331	0.343	0.354	0.341
	8Kb	x	0.344	0.352	0.354	0.345
		y	0.341	0.354	0.364	0.352
	8Kc	x	0.351	0.360	0.362	0.352
		y	0.343	0.357	0.369	0.354
	8Kd	x	0.352	0.362	0.364	0.354
		y	0.354	0.369	0.380	0.364
8L	8La	x	0.345	0.354	0.355	0.346
		y	0.352	0.364	0.375	0.362
	8Lb	x	0.346	0.355	0.356	0.347
		y	0.362	0.375	0.385	0.371
	8Lc	x	0.354	0.364	0.366	0.355
		y	0.364	0.380	0.391	0.375
	8Ld	x	0.355	0.366	0.367	0.356
		y	0.375	0.391	0.401	0.385

Tolerance of each bin limit = ± 0.02

Color Coordinates Chart for ASMT-QWBx

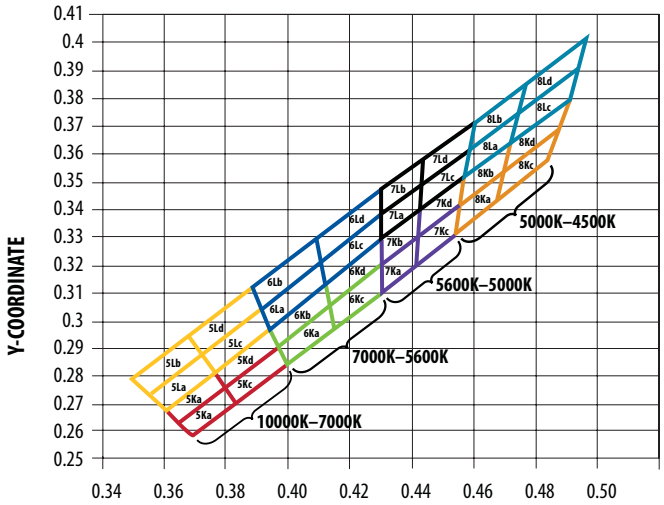

Color Coordinates Chart for ASMT-QYBx

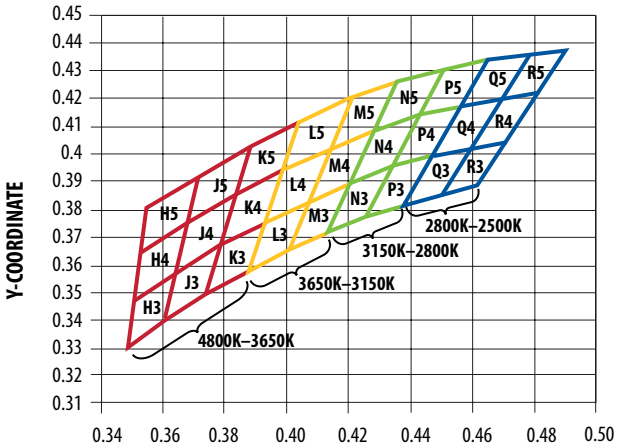

Color Bin Selection (X_4) for ASMT-QYBx

Individual reel will contain parts from one sub bin only.

X_4	
0	Full Distribution
A	H, J and K only
B	H, J, K, L and M only
C	L and M only
D	L, M, N and P only
E	N and P only
F	N, P, Q and R only
G	Q and R only
Z	Special Color Bin

Color Bin Limits for ASMT-QYBx

Bin ID	Sub Bin ID	Limits (Chromaticity Coordinates)				
H	H3	x	0.348	0.360	0.364	0.350
		y	0.332	0.341	0.358	0.348
	H4	x	0.350	0.364	0.367	0.352
		y	0.348	0.358	0.376	0.365
	H5	x	0.352	0.367	0.371	0.354
		y	0.365	0.376	0.392	0.381
J	J3	x	0.360	0.373	0.378	0.364
		y	0.341	0.350	0.368	0.358
	J4	x	0.364	0.378	0.383	0.367
		y	0.358	0.368	0.386	0.376
	J5	x	0.367	0.383	0.388	0.371
		y	0.376	0.386	0.403	0.392
K	K3	x	0.373	0.387	0.393	0.378
		y	0.350	0.358	0.376	0.368
	K4	x	0.378	0.393	0.399	0.383
		y	0.368	0.376	0.395	0.386
	K5	x	0.383	0.399	0.405	0.388
		y	0.386	0.395	0.412	0.403

Color Bin Limits for ASMT-QYBx

Bin ID	Sub Bin ID	Limits (Chromaticity Coordinates)				
L	L3	x	0.387	0.400	0.407	0.393
		y	0.358	0.366	0.384	0.376
	L4	x	0.393	0.407	0.414	0.399
		y	0.376	0.384	0.402	0.395
	L5	x	0.399	0.414	0.421	0.405
		y	0.395	0.402	0.420	0.412
M	M3	x	0.400	0.413	0.421	0.407
		y	0.366	0.372	0.390	0.384
	M4	x	0.407	0.421	0.429	0.414
		y	0.384	0.390	0.409	0.402
	M5	x	0.414	0.429	0.436	0.421
		y	0.402	0.409	0.426	0.420
N	N3	x	0.413	0.425	0.434	0.421
		y	0.372	0.378	0.396	0.390
	N4	x	0.421	0.434	0.443	0.429
		y	0.390	0.396	0.414	0.409
	N5	x	0.429	0.443	0.451	0.436
		y	0.409	0.414	0.430	0.426
P	P3	x	0.425	0.438	0.447	0.434
		y	0.378	0.382	0.400	0.396
	P4	x	0.434	0.447	0.456	0.443
		y	0.396	0.400	0.417	0.414
	P5	x	0.443	0.456	0.465	0.451
		y	0.414	0.417	0.434	0.430
Q	Q3	x	0.438	0.450	0.460	0.447
		y	0.382	0.386	0.403	0.400
	Q4	x	0.447	0.460	0.470	0.456
		y	0.400	0.403	0.420	0.417
	Q5	x	0.456	0.470	0.479	0.465
		y	0.417	0.420	0.436	0.434

Color Bin Limits for ASMT-QYBx

Bin ID	Sub Bin ID	Limits (Chromaticity Coordinates)				
R	R3	x	0.450	0.462	0.472	0.460
		y	0.386	0.389	0.405	0.403
	R4	x	0.460	0.472	0.482	0.470
		y	0.403	0.405	0.422	0.420
	R5	x	0.470	0.482	0.491	0.479
		y	0.420	0.422	0.437	0.436

Tolerance of each bin limit = ± 0.02

Packaging Option (X_5)

X_5	Test Current	Package Type	Reel Size
E	150 mA	Top Mount	7 inch

0.5W Power PLCC4 Cool White and Warm White Luminous Flux Bin and Color Bin (ASMT-QWBx/ASMT-QYBx)

Super 0.5W Power PLCC4 Cool White (ASMT-QWBx)

ASMT-QWBx-N X_2-X_3-X_4-E

- X_4: Color bin
- X_3: Max flux bin
- X_2: Min flux bin

Super 0.5W Power PLCC4 Warm White (ASMT-QYBx)

ASMT-QYBx-N X_2-X_3-X_4-E

- X_4: Color bin
- X_3: Max flux bin
- X_2: Min flux bin

Color Bin (X_4)

Individual reel will contain parts from one sub bin only.

Sub Bin	Chromaticity Coordinates				
		0.2950	0.2920	0.2984	0.3009
1A	x	0.2950	0.2920	0.2984	0.3009
	y	0.2970	0.3060	0.3133	0.3042
1B	x	0.2920	0.2895	0.2962	0.2984
	y	0.3060	0.3135	0.3220	0.3133
1C	x	0.2984	0.2962	0.3028	0.3048
	y	0.3133	0.3220	0.3304	0.3207
1D	x	0.2984	0.3048	0.3068	0.3009
	y	0.3133	0.3207	0.3113	0.3042
2A	x	0.3048	0.3130	0.3144	0.3068
	y	0.3207	0.3290	0.3186	0.3113
2B	x	0.3028	0.3115	0.3130	0.3048
	y	0.3304	0.3391	0.3290	0.3207
2C	x	0.3115	0.3205	0.3213	0.3130
	y	0.3391	0.3481	0.3373	0.3290
2D	x	0.3130	0.3213	0.3221	0.3144
	y	0.3290	0.3373	0.3261	0.3186
3A	x	0.3215	0.3290	0.3290	0.3222
	y	0.3350	0.3417	0.3300	0.3243
3B	x	0.3207	0.3290	0.3290	0.3215
	y	0.3462	0.3538	0.3417	0.3350
3C	x	0.3290	0.3376	0.3371	0.3290
	y	0.3538	0.3616	0.3490	0.3417
3D	x	0.3290	0.3371	0.3366	0.3290
	y	0.3417	0.3490	0.3369	0.3300
4A	x	0.3371	0.3451	0.3440	0.3366
	y	0.3490	0.3554	0.3427	0.3369
4B	x	0.3376	0.3463	0.3451	0.3371
	y	0.3616	0.3687	0.3554	0.3490
4C	x	0.3463	0.3551	0.3533	0.3451
	y	0.3687	0.3760	0.3620	0.3554
4D	x	0.3451	0.3533	0.3515	0.3440
	y	0.3554	0.3620	0.3487	0.3427
5A	x	0.3530	0.3615	0.3590	0.3512
	y	0.3597	0.3659	0.3521	0.3465
5B	x	0.3548	0.3641	0.3615	0.3530
	y	0.3736	0.3804	0.3659	0.3597
5C	x	0.3641	0.3736	0.3702	0.3615
	y	0.3804	0.3874	0.3722	0.3659
5D	x	0.3615	0.3702	0.3670	0.3590
	y	0.3659	0.3722	0.3578	0.3521

Flux Bin Selection (X_2X_3)

Individual reel will contain parts from one bin only.

X_2	Min Flux Bin
X_3	Min Flux Bin

Flux Bin Limits

Bin ID	Min. (lm)	Max. (lm)
A	18.1	23.5
B	23.5	30.6
C	30.6	35.2
D	35.2	39.8
E	39.8	45.7
F	45.7	51.7
G	51.7	56.8
H	56.8	62
J	62	67.2
K	67.2	73.9

Tolerance of each bin limit = ± 12%.

Color Bin (X_4) cont.

6A	x	0.3670	0.3702	0.3825	0.3783
	y	0.3578	0.3722	0.3798	0.3646
6B	x	0.3702	0.3736	0.3869	0.3825
	y	0.3722	0.3874	0.3958	0.3798
6C	x	0.3825	0.3869	0.4006	0.3950
	y	0.3798	0.3958	0.4044	0.3875
6D	x	0.3783	0.3825	0.3950	0.3898
	y	0.3646	0.3798	0.3875	0.3716
7A	x	0.3889	0.3941	0.4080	0.4017
	y	0.3690	0.3848	0.3916	0.3751
7B	x	0.3941	0.3996	0.4146	0.4080
	y	0.3848	0.4015	0.4089	0.3916
7C	x	0.4080	0.4146	0.4299	0.4221
	y	0.3916	0.4089	0.4165	0.3984
7D	x	0.4017	0.4080	0.4221	0.4147
	y	0.3751	0.3916	0.3984	0.3814
8A	x	0.4147	0.4221	0.4342	0.4259
	y	0.3814	0.3984	0.4028	0.3853
8B	x	0.4221	0.4299	0.4430	0.4342
	y	0.3984	0.4165	0.4212	0.4028
8C	x	0.4342	0.4430	0.4562	0.4465
	y	0.4028	0.4212	0.4260	0.4071
8D	x	0.4259	0.4342	0.4465	0.4373
	y	0.3853	0.4028	0.4071	0.3893

Color Bin (X_4)

Individual reel will contain parts from one sub binonly.

X_4	
Bin	Sub Bin
A	1A, 1B, 1C, 1D
B	2A, 2B, 2C, 2D
C	3A, 3B, 3C, 3D
D	4A, 4B, 4C, 4D
E	5A, 5B, 5C, 5D
F	6A, 6B, 6C, 6D
G	7A, 7B, 7C, 7D
H	8A, 8B, 8C, 8D
J	9A, 9B, 9C, 9D
K	1A, 1B, 1C, 1D, 2A, 2B, 2C, 2D
L	2A, 2B, 2C, 2D, 3A, 3B, 3C, 3D
M	3A, 3B, 3C, 3D, 4A, 4B, 4C, 4D
N	4A, 4B, 4C, 4D, 5A, 5B, 5C, 5D
P	5A, 5B, 5C, 5D, 6A, 6B, 6C, 6D
R	7A, 7B, 7C, 7D, 8A, 8B, 8C, 8D
S	8A, 8B, 8C, 8D, 9A, 9B, 9C, 9D
0	1A, 1B, 1C, 1D, 2A, 2B, 2C, 2D, 3A, 3B, 3C, 3D, 4A, 4B, 4C, 4D, 5A, 5B, 5C, 5D, 6A, 6B, 6C, 6D
1	7A, 7B, 7C, 7D, 8A, 8B, 8C, 8D, 9A, 9B, 9C, 9D

Forward Voltage Bin

Bin	Min (V)	Max (V)
F05	2.80	3.00
F06	3.00	3.20
F07	3.20	3.40
F08	3.40	3.60

Tolerance ± 0.1V

Color Bin (X_4) cont.

9A	x	0.4373	0.4465	0.4582	0.4483
	y	0.3893	0.4071	0.4099	0.3919
9B	x	0.4465	0.4562	0.4687	0.4582
	y	0.4071	0.4260	0.4289	0.4099
9C	x	0.4582	0.4687	0.4813	0.4700
	y	0.4099	0.4289	0.4319	0.4126
9D	x	0.4483	0.4582	0.4700	0.4593
	y	0.3919	0.4099	0.4126	0.3944

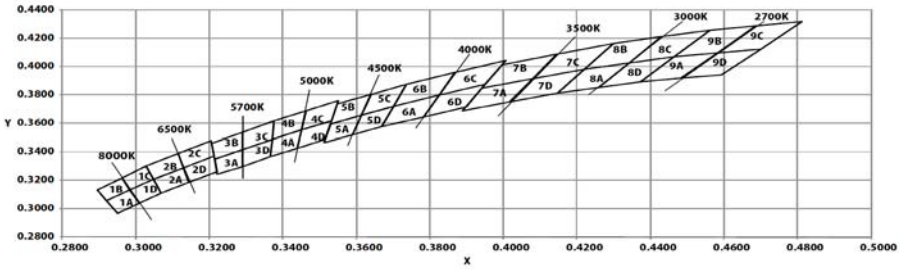

Subminiature Tricolor PLCC4 ASMB-LTC1

Part Numbering System

A	S	M	B	-	L	T	C	1	-	O	X_1	X_2	X_3	X_4

Code	Description	Option		
X_1	Minimum intensity bin	A	Red: bin P1 Green: bin Q2 Blue: bin N1	Red: bin P1, P2, Q1 Green: bin Q2, R1, R2 Blue: bin N1, N2, P1
X_2	Number of intensity bins	3	3 intensity bins from minimum	
X_3	Color bin combination	A	Red: full distribution Green: bin A, B, C Blue: bin A, B, C	
X_4	Test option	5	Test current R/G/B=5mA	

Bin Information

Intensity Bins (CAT)

Color	Bin ID	Luminous Intensity (mcd)	
		Min.	Max.
Red	P1	52.0	69.0
	P2	69.0	92.0
	Q1	92.0	124.0
Green	Q2	124.0	160.0
	R1	160.0	215.0
	R2	215.0	288.0
Blue	N1	28.8	39.0
	N2	39.0	52.0
	P1	52.0	69.0

Tolerance ±12%

Color Bin (BIN) Red

Bin ID	Dominant wavelength (nm)		Chromaticity coordinates (for reference only)	
	Min.	Max.	Cx	Cy
-	617	630	0.6674	0.3158
			0.6850	0.3149
			0.7079	0.2920
			0.6892	0.2941

Tolerance ±1 nm

Color Bin (BIN) Green

Bin ID	Dominant wavelength (nm)		Chromaticity coordinates (for reference only)	
	Min.	Max.	Cx	Cy
A	523	526	0.1686	0.6821
			0.1097	0.8067
			0.1329	0.7983
			0.1856	0.6759
B	526	529	0.1856	0.6759
			0.1329	0.7983
			0.1561	0.7865
			0.2027	0.6673
C	529	532	0.2027	0.6673
			0.1561	0.7865
			0.1784	0.7734
			0.2192	0.6576

Tolerance ±1 nm

Color Bin (BIN) Blue

Bin ID	Dominant wavelength (nm)		Chromaticity coordinates (for reference only)	
	Min.	Max.	Cx	Cy
A	465	468	0.1454	0.0546
			0.1355	0.0399
			0.1291	0.0494
			0.1393	0.0636
B	468	471	0.1393	0.0636
			0.1291	0.0494
			0.1215	0.0626
			0.1321	0.0761
C	471	474	0.1321	0.0761
			0.1215	0.0626
			0.1128	0.0799
			0.1238	0.0926

Tolerance ±1 nm

Package Drawings

PLCC-2 Top Mount

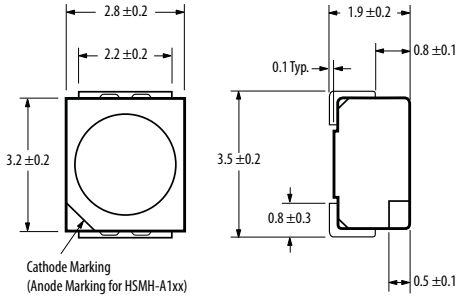

PLCC-2 Reverse Mount

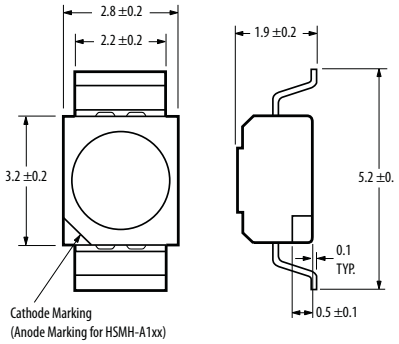

Power PLCC-4 with Lens

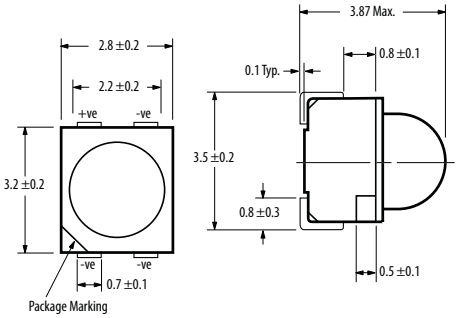

BiColor/TriColor PLCC4/Power PLCC-4

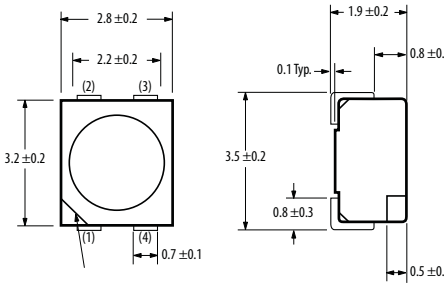

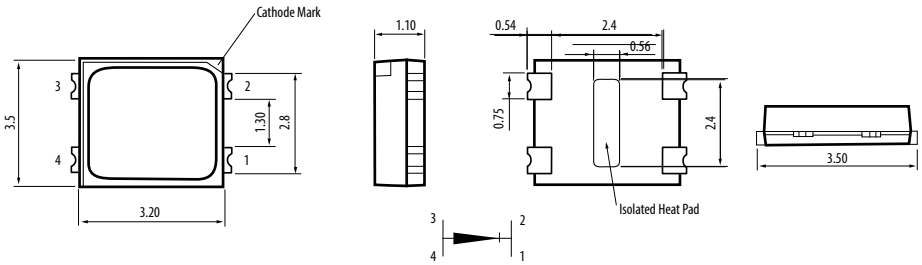

Super 0.5W Power PLCC-4

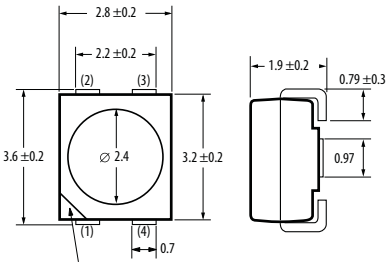

High Brightness Tricolor PLCC-4

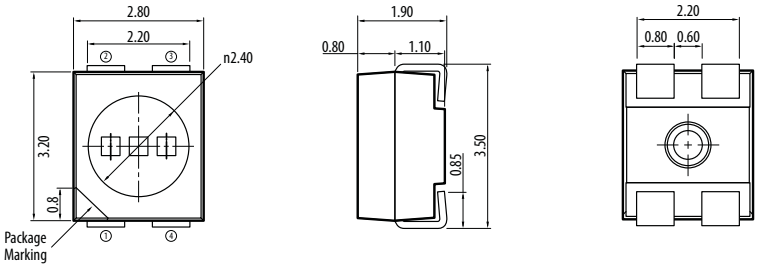

ASMD-LWG3/FWG3 -Nxxxx

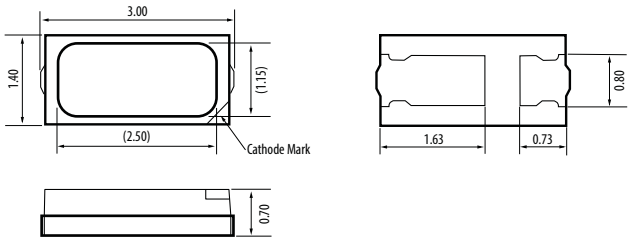

ASMF-LWG4-NxxxD

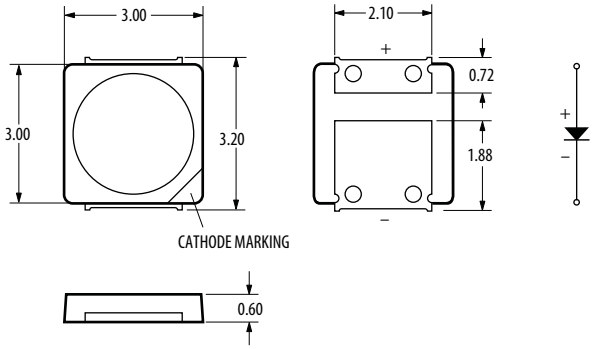

Notes:
1. All dimensions in millimeters.
2. Tolerance is ±0.2mm unless otherwise specified.
3. Dimensions in brackets are for reference only.
4. Terminal finish: Silver plating.

Package Drawings

High Brightness Tricolor PLCC-6 ASMB-TTB0/TTB2

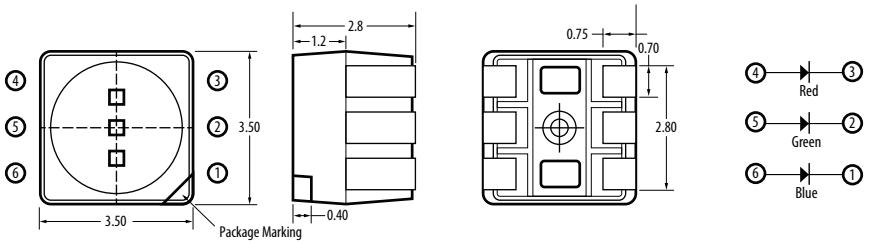

Note:
Refer to respective product datasheet for pin configuration.

Note:
Diagram represents the overall package dimension for ASMT-YTB2/YTC2/YTD2/YTB7/YTC7/YTD7. ASMTYTC2/YTC7 is black body, while ASMT-YTD2/YTD7 is white surface.

High Brightness Tricolor PLCC-6 ASMT-YTB2/YTC2/YTD2/YTB7/YTC7/YTD7

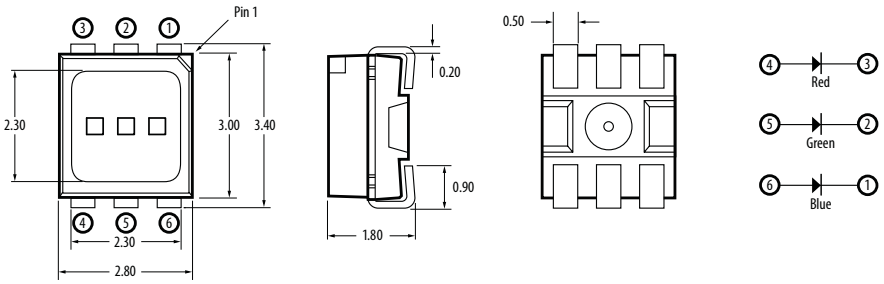

PLCC4 ASMB-LTC1

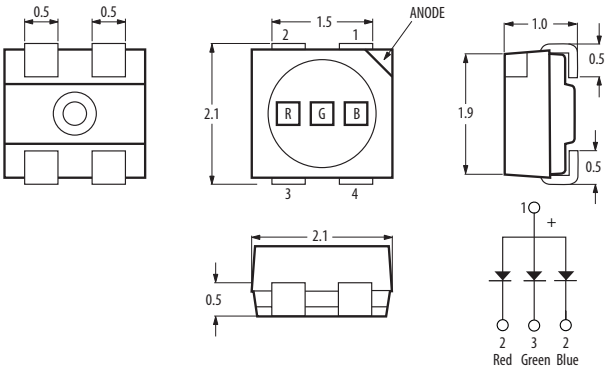

High Brightness Tricolor DFN6 ASMB-6WD0/6ED0

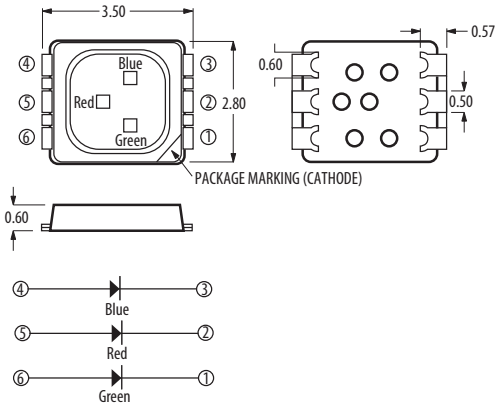

High Brightness Tricolor DFN6 ASMB-6WZ0/6EZ0

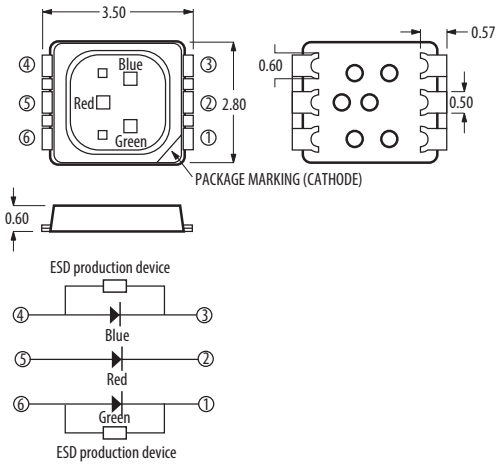

Mini PLCC-2 Surface Mount LEDs

Description

Broadcom's ASMT-TxBM-Nxxxx Mini PLCC-2 SMT LEDs are designed specifically for use in Automotive Interior applications. They have a wide viewing angle of 110 degree making them ideally suited for instrument cluster panel, push button, HVAC and ambient decorative lighting applications in automotive interiors.

The LEDs are packed in EIA-compliant tape and reel to facilitate easy pick and place assembly. Every reel will be shipped in single intensity and color bin, to provide close uniformity.

Benefits

- Industry standard Mini PLCC-2
- High reliability LED package
- High brightness using InGaN dice technologies
- High optical efficiency
- Wide viewing angle at 110°
- Available is 8mm carrier tape on 7-inch reel
- Stable and consistent performance with minimum degradation
- JEDEC MSL

Applications

- Interior automotive
- Instrument panel backlighting
- Central console backlighting
- Navigation and audio system backlighting
- Push button backlighting
- Ambient illumination
- Car puddle lighting

Mini PLCC2

Part Number	Color	Color Temperature	Intensity Bin (Luminous Intensity @ 20mA)	Luminous Intensity @ 20mA (typ)	Max.Current	Viewing Angle	Packaging
ASMT-TWBM-NV702	Cool White	4500 - 8000K	T2 (355 - 450 mcd) U1 (450 - 560 mcd) U2 (560 - 715 mcd) V1 (715 - 900 mcd) V2 (900 - 1125 mcd) W1 (1125-1400mcd) W2 (1400-1800mcd)	1100	20mA	120°	Reel
ASMT-TBBM-NS402	Blue	Not Applicable	P2 (56 - 71.5 mcd) Q1 (71.5 - 90 mcd) Q2 (90 - 112.5 mcd) R1 (112.5 - 140 mcd) R2 (140 - 180 mcd) S1 (180-224mcd) S2 (224-285mcd) T1 (285-355mcd) T2 (355-450mcd)	285	20mA	120°	Reel
ASMT-TGBM-NU3B2	Green	Not Applicable	T1 (285 - 355 mcd) T2 (3555 - 450 mcd) U1 (450 - 560 mcd) U2 (560 - 715 mcd) V1 (715 - 900 mcd)	600	20mA	120°	Reel

Notes:
1. θ1/2 is the off-axis angle where the luminous intensity is ½ the peak intensity.
2. ΦV is the total luminous flux output as measured with an integrating sphere at mono pulse conditions.
3. Tolerance = ±12%.

ASMT-T X_1BM-N X_2-X_3-X_4-X_5

- Packaging option
- Color bin selection
- Intensity bin selection
- Color
  - B – Blue
  - G – Green
  - W – White

Part Numbering System

Device Color (X_1)

B	Blue
G	Green

Intensity Bin Select (X_2X_3)

Individual reel will contain parts from one half bin only.

X_2	Min IV Bin
X_3	Number of half bins
0	Full Distribution
2	2 half bins starting from X21
3	3 half bins starting from X21
4	4 half bins starting from X21
5	5 half bins starting from X21
6	2 half bins starting from X22
7	3 half bins starting from X22
8	4 half bins starting from X22
9	5 half bins starting from X22

Intensity Bin Limits

Bin ID	Min (mcd)	Max (mcd)
P1	45.0	56.0
P2	56.0	71.5
Q1	71.5	90.0
Q2	90.0	112.5
R1	112.5	140.0
R2	140.0	180.0
S1	180.0	224.0
S2	224.0	285.0
T1	285.0	355.0
T2	355.0	450.0
U1	450.0	560.0
U2	560.0	715.0
V1	715.0	900.0
V2	900.0	1125.0

Tolerance of each bin limit = ± 12%

Color Bin Select (X_4)

Individual reel will contain parts from one half bin only.

X_4	
0	Full Distribution
A	1 and 2 only
B	2 and 3 only
C	3 and 4 only
G	1, 2 and 3 only
H	2, 3 and 4 only
Z	Special binning

Color Bin Limits

Blue	Min. (nm)	Max. (nm)
1	460.0	465.0
2	465.0	470.0
3	470.0	475.0
4	475.0	480.0

Green	Min. (nm)	Max. (nm)
1	515.0	520.0
2	520.0	525.0
3	525.0	530.0
4	530.0	535.0

Tolerance of each bin limit = ± 1%

Packaging Option (X_5)

Option	Test Current	Package Type	Reel Size
2	20mA	Top Mount	7 inch

Device Color (X_1)

W	White

Intensity Bin Select (X_2X_3)

Individual reel will contain parts from one half bin only.

X_2	Min IV Bin
X_3	Number of half bins
0	Full Distribution
2	2 half bins starting from X21
3	3 half bins starting from X21
4	4 half bins starting from X21
5	5 half bins starting from X21
6	2 half bins starting from X22
7	3 half bins starting from X22
8	4 half bins starting from X22
9	5 half bins starting from X22

Intensity Bin Limits

Bin ID	Min (mcd)	Max (mcd)
T1	285.0	355.0
T2	355.0	450.0
U1	450.0	560.0
U2	560.0	715.0
V1	715.0	900.0
V2	900.0	1125.0
W1	1125.0	1400.00
W2	1400.00	1800.00

Bin ID	Min (mcd)	Max (mcd)
X1	1800.00	2240.00
X2	2240.00	2850.00

Tolerance of each bin limit = ± 12%

Color Bin Select (X_4)

Individual reel will contain parts from one half bin only.

X_4	
0	Full Distribution
A	5K and 5L only
B	6K and 6L only
C	7K and 7L only
D	8K and 8L only
E	5K and 6K only
F	5L and 6L only
G	6K and 7K only
H	6L and 7L only
J	7K and 8K only
K	7L and 8L only
L	5K, 5L, 6K and 6L only
M	6K, 6L, 7K and 7L only
N	7K, 7L, 8K and 8L only
Z	Special binning

Color Bin Limits

Blue	Min. (nm)	Max. (nm)
1	460.0	465.0
2	465.0	470.0
3	470.0	475.0
4	475.0	480.0

Green	Min. (nm)	Max. (nm)
1	515.0	520.0
2	520.0	525.0
3	525.0	530.0
4	530.0	535.0

Tolerance of each bin limit = ± 1%

Packaging Option (X_5)

Option	Test Current	Package Type	Reel Size
2	20mA	Top Mount	7 inch

Color Bin (X_4)

Individual reel will contain parts from one sub bin only.

Bin ID	Sub Bin ID					Limits (Chromaticity Coordinates)
5K	5Ka	x	0.296	0.304	0.302	0.294
		y	0.259	0.270	0.276	0.264
	5Kb	x	0.294	0.302	0.300	0.291
		y	0.264	0.276	0.281	0.268
	5Kc	x	0.304	0.313	0.312	0.302
		y	0.270	0.284	0.291	0.276
	5Kd	x	0.302	0.312	0.310	0.300
		y	0.276	0.291	0.297	0.281
5L	5La	x	0.291	0.300	0.298	0.288
		y	0.268	0.281	0.288	0.274
	5Lb	x	0.288	0.298	0.295	0.285
		y	0.274	0.288	0.294	0.279
	5Lc	x	0.300	0.310	0.309	0.298
		y	0.281	0.297	0.305	0.288
	5Ld	x	0.298	0.309	0.307	0.295
		y	0.288	0.305	0.312	0.294
6K	6Ka	x	0.313	0.322	0.321	0.312
		y	0.284	0.297	0.305	0.291
	6Kb	x	0.312	0.321	0.320	0.310
		y	0.291	0.305	0.314	0.297
	6Kc	x	0.322	0.330	0.330	0.321
		y	0.297	0.310	0.320	0.305
	6Kd	x	0.321	0.330	0.330	0.320
		y	0.305	0.320	0.330	0.314
6L	6La	x	0.310	0.320	0.319	0.309
		y	0.297	0.314	0.322	0.305
	6Lb	x	0.309	0.319	0.318	0.307
		y	0.305	0.322	0.329	0.312
	6Lc	x	0.320	0.330	0.330	0.319
		y	0.314	0.330	0.339	0.322
	6Ld	x	0.319	0.330	0.330	0.318
		y	0.322	0.339	0.347	0.329

Bin ID	Sub Bin ID					Limits (Chromaticity Coordinates)
7K	7Ka	x	0.330	0.336	0.337	0.330
		y	0.310	0.320	0.330	0.320
	7Kb	x	0.330	0.337	0.337	0.330
		y	0.320	0.330	0.341	0.330
	7Kc	x	0.336	0.343	0.344	0.337
		y	0.320	0.331	0.341	0.330
	7Kd	x	0.337	0.344	0.345	0.337
		y	0.330	0.341	0.352	0.341
7L	7La	x	0.330	0.337	0.337	0.330
		y	0.330	0.341	0.349	0.339
	7Lb	x	0.330	0.337	0.338	0.330
		y	0.339	0.349	0.358	0.347
	7Lc	x	0.337	0.345	0.346	0.337
		y	0.341	0.352	0.362	0.349
	7Ld	x	0.337	0.346	0.347	0.338
		y	0.349	0.362	0.371	0.358
8K	8Ka	x	0.343	0.351	0.352	0.344
		y	0.331	0.343	0.354	0.341
	8Kb	x	0.344	0.352	0.354	0.345
		y	0.341	0.354	0.364	0.352
	8Kc	x	0.351	0.360	0.362	0.352
		y	0.343	0.357	0.369	0.354
	8Kd	x	0.352	0.362	0.364	0.354
		y	0.354	0.369	0.380	0.364
8L	8La	x	0.345	0.354	0.355	0.346
		y	0.352	0.364	0.375	0.362
	8Lb	x	0.346	0.355	0.356	0.347
		y	0.362	0.375	0.385	0.371
	8Lc	x	0.354	0.364	0.366	0.355
		y	0.364	0.380	0.391	0.375
	8Ld	x	0.355	0.366	0.367	0.356
		y	0.375	0.391	0.401	0.385

Tolerance of each bin limit = ±0.02

Color Coordinates Chart

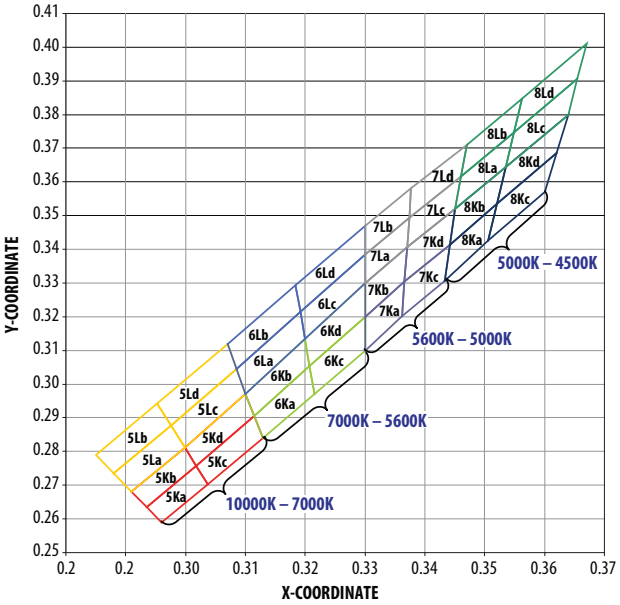

Package Drawing

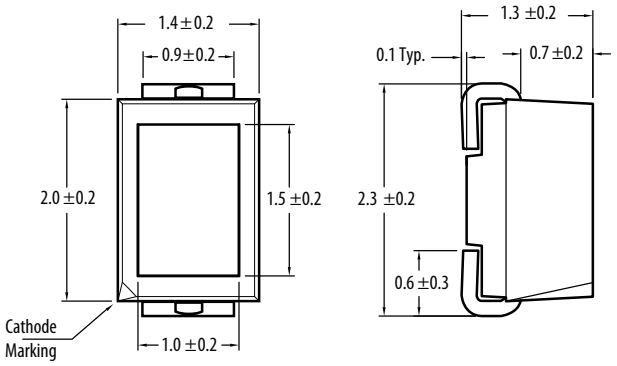

Notes:
1. All dimensions in millimeters.
2. Terminal Finish: Ag plating.
3. Encapsulation material: Silicone resin.

Envisium Power PLCC-4 Surface Mount LEDs

Description

Envisium is the premier class of mid-Power LEDs using TS AlInGaP chip technology. Envisium LEDs offer unparalleled performance, engineering and design flexibility.

Envisium Power PLCC-4 SMT LEDs, available in red, red-orange and amber, fi ll the need for mid-power illumination capabilities between Broadcoms' conventional PLCC-4 products, and the Super 0.5W Power PLCC-4. The Power PLCC-4 package can be driven at high current due to its superior design, and is able to dissipate the heat more efficiently than conventional PLCC-2 SMT LEDs. It also offers much higher quality and reliability and superior mechanical characteristics to reduce tombstoning, prevent delamination and improve pick-and-place assembly.

The reliability and performance characteristics of these mid-power LEDs, such as their–40°C to +100°C operating temperature range, make them uniquely suitable for use in harsh conditions such as automotive applications, and in electronic signs and signals. To facilitate easy pick and place assembly, the LEDs are packed in EIA-compliant tape and reel. Every reel is shipped in single intensity and color bin (except for red) to provide close uniformity.

These LEDs are compatible with both IR solder refl ow and through-the-wave (TTW) soldering processes. in, to provide close uniformity.

Benefits

- Industry Standard PLCC-4 (plastic leaded chip carrier) form factor
- High reliability power PLCC-4 package
- High brightness with optimum flux performance using TS AlInGaP dice technologies
- Available in red, red orange and amber colors
- High optical efficiency
- Higher ambient temperature at the same current possible compared to PLCC-2
- Super wide 120-degree viewing angle
- Well-suited for backlighting applications
- Supplied in EIA-standard 8 mm carrier tape on 7 inch reel
- Compatible with both IR and TTW soldering processes

Applications

- Interior automotive
  - Instrument panel backlighting
  - Central console backlighting
  - Navigation and audio system lighting
  - Push button backlighting
- Exterior automotive
  - Turn signals
  - Side repeater lamps
  - CHMSLs (center high-mounted stop light)
  - Rear combination lamps
  - Puddle lights
- Electronic signs and signals
  - Channel lettering
  - Contour lighting
  - Indoor variable message signs
- Office automation, home appliances, industrial equipment
  - Front panel backlighting
  - Push button backlighting
  - Display backlighting

Envisium PLCC-4 Surface Mount LED

Part Number	Color	Typ. Dominant Wavelength λD (nm)1	Typ. Viewing Angle 2θ½ (°)2	Intensity Bin	Min. IV (mcd)	Max. IV (mcd)	Total Flux ΦV (mlm)4,5 Typ.	Typ. VF (V)	Test Current (mA)
ASMC-PRB9-TV005	AlInGaP Red	630.0	120	V1	630.00	1000.00	2600.00	2.8	50
		630.0	120	V2	790.00	1260.00	3300.00	2.8	50
		630.0	120	W1	1000.00	1600.00	-	2.8	50
ASMC-PHB9-TW005	AlInGaP Red Orange	617.0	120	W1	1000.00	1600.00	4300.00	2.8	50
		617.0	120	W2	1200.00	2020.00	5000.00	2.8	50
		617.0	120	X1	1580.00	2500.00	-	2.8	50
ASMC-PAB9-TV005	AlInGaP Amber	592.0	120	V1	630.00	1000.00	3000.00	2.8	50
		592.0	120	V2	790.00	1260.00	3800.00	2.8	50
		592.0	120	W1	1000.00	1600.00	-	2.8	50

Notes:
1. The dominant wavelength, λ_D, is derived from the CIE Chromaticity Diagram and represents the color of the device.
2. $\theta_{1/2}$ is the off-axis angle where the luminous intensity is 1/2 the peak intensity.
3. The luminous intensity, I_V, is measured at the mechanical axis of the lamp package. The actual peak of the spatial radiation pattern may not be aligned with this axis.
4. Φ is the total luminous flux output as measured with an integrating sphere at mono pulse conditions.

ASMC-PxB9-T X_2-X_3-X_4-X_5

- X_5 — Packaging option
- X_4 — Color bin selection
- X_2 — Intensity bin selection

Color Bin Selection (X_4)

An individual reel will contain parts from one bin only.

X_4	
0	Full Distribution
A	1 and 2 only
B	2 and 3 only
C	3 and 4 only
D	4 and 5 only
E	5 and 6 only
G	1, 2 and 3 only
H	2, 3 and 4 only
J	3, 4 and 5 only
K	4, 5 and 6 only
M	1, 2, 3 and 4 only
N	2, 3, 4 and 5 only
P	3, 4, 5 and 6 only
R	1, 2, 3, 4 and 5 only
S	2, 3, 4, 5 and 6 only

Intensity Bin Selection (X_2X_3)

X_2	Min. I_V Bin
X_3	Number of half bins
0	Full Distribution
2	2 half bins starting from $X_2$1
3	3 half bins starting from $X_2$1
4	4 half bins starting from $X_2$1
5	5 half bins starting from $X_2$1
6	2 half bins starting from $X_2$2
7	3 half bins starting from $X_2$2
8	4 half bins starting from $X_2$2
9	5 half bins starting from $X_2$2

Color Bin Limits

Amber/ Yellow	Min. (nm)	Max. (nm)
1	582.0	584.5
2	584.5	587.0
3	587.0	589.5
4	589.5	592.0
5	592.0	594.5
6	594.5	597.0

Red Orange	Min. (nm)	Max.(nm)
1	611.0	616.0
2	616.0	620.0

Red	Min. (nm)	Max. (nm)
Full Distribution		

Tolerance of each bin limit = ±1 nm

Intensity Bin Limits

Bin ID	Min. (mcd)	Max. (mcd)
V1	715.00	900.00
V2	900.00	1125.00
W1	1125.00	1400.00
W2	1400.00	1800.00
X1	1800.00	2240.00
X2	2240.00	2850.00

Tolerance of each bin limit = ± 12%

Packaging Option (X_5)

X_5	Test Current	Package Type	Reel Size
5	50 mA	Top Mount	7 inch

Package Drawing

Envisium PLCC-4 Surface Mount LED

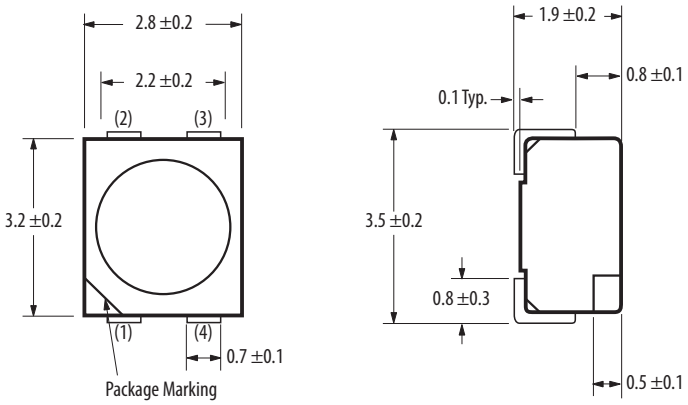

Note:
All dimensions in millimeters.

Envisium Power PLCC-4	
1	Cathode
2	Anode
3	Cathode
4	Cathode

High Power LEDs

Description

Broadcom's High Power and Mini High Power LED is a high performance, energy efficient device which can handle high thermal and high driving current. The White High Power LED is available in a wide range of color. For white color, the color temperature ranges from 2700K to 10000K.

The low profile package design and ultra small footprint is suitable for a wide variety of applications especially where space and height is a constraint.

The package is compatible with reflow soldering process. It is packed in EIA-compliant tape and reel option.

Benefits

- Available in full range of colors: Red, Red Orange, Amber, Green, Blue, Royal Blue, Cyan, Cool White, Neutral White and Warm White
- Energy efficient
- Compatible with reflow soldering process
- High current operation
- Long operation life
- Wide viewing angle
- Silicone encapsulation
- Non-ESD sensitive (threshold > 16kV)

Applications

- Sign backlight
- Safety, exit and emergency sign lightings
- Specialty lighting such as task lighting and reading lights
- Retail display
- Commercial lighting
- Accent or marker lightings, strip or step lightings
- Portable lightings, bicycle head lamp, torch lights
- Decorative lighting
- Architectural lighting
- Street lighting
- Tunnel lighting
- Contour lighting
- Traffic signals

1W High Power LEDs

Part Number	Color	Color Temperature (K)/ Wavelength (nm)	Flux Bin (Luminous Flux/Radiometric Power @ 350mA)	Luminous Flux (lm) @ 350mA (typ)	Luminous Flux (lm) @ 700mA (typ)	Max. Current	Viewing Angle	Electrically Isolated Metal Slug	Packaging
ASMT-AW00-NUW01	Cool White	4500 - 10,000K (1)	U(87.4-99.6lm); V(99.6-113.6lm); W(113.6-129.5lm)	95lm	-	500mA	140	Yes	Tube and Reel[2]
ASMT-AN00-NUW01	Neutral White	4500 - 10,000K (1)	U(87.4-99.6lm); V(99.6-113.6lm); W(113.6-129.5lm)	90lm	-	500mA	140	Yes	Tube and Reel[2]
ASMT-AY00-NUV00	Warm White	2700 - 3500K[1]	U(87.4-99.6lm); V(99.6-113.6lm)	95lm	-	500mA	140	Yes	Tube[2]
ASMT-AL00-NQS00	Royal Blue	440-460nm[3, 4]	Q(435-515mW); R(515-595mW); S(595-685mW)	550mW	–	500mA	140	Yes	Tube[2]
ASMT-AB00-NMP00	Blue	460-480nm[3]	M(13.9-18.1lm); N(18.1-23.5lm); P(23.5-30.6lm)	18lm	–	500mA	140	Yes	Tube[2]
ASMT-AC00-NSU00	Cyan	490-520nm[3]	S(51.7-67.2lm); T(67.2-87.4lm); U(87.4-99.6lm)	75lm	–	500mA	140	Yes	Tube[2]
ASMT-AG00-NUV00	Green	515-535nm[3]	U(87.4-99.6lm); V(99.6-113.6lm)	105lm	–	500mA	140	Yes	Tube[2]
ASMT-AA00-ARS00	Amber	587-597nm[3]	R(39.8-51.7lm); S(51.7-67.2lm)	50lm	–	500mA	140	No	Tube[2]
ASMT-AH03-ATU00	Red-Orange	610-620nm	T(67.2-87.4lm); U(87.4-99.6lm)	75lm	–	500mA	140	No	Tube[2]
ASMT-AR00-ARS00	Red	620-635nm	R(39.8-51.7lm); S(51.7-67.2lm)	50lm	–	500mA	140	No	Tube[2]
ASMT-AR00-AST00	Red	620-635nm	S(51.7-67.2lm); T(67.2-87.4lm)	65lm	–	500mA	140	No	Tube[2]

Notes:
1. Narrow Color Temperature selections are available on request.
2. All above listed LEDs are also avaialble in Reel packing.
3. Narrow color bin selections for blue, green, amber, royal-blue, and cyan are available on request.
4. For royal-blue, the wavelength shown in the above table is peak wavelength.

3W High Power LEDs

Part Number	Color	Color Temperature (K)/ Wavelength (nm)	Flux Bin (Luminous Flux/Radiometric Power @ 350mA)	Luminous Flux (lm) @ 350mA (typ)	Luminous Flux (lm) @ 700mA (typ)	Max. Current	Viewing Angle	Electrically Isolated Metal Slug	Packaging
ASMT-AW31-NVX00	Cool White	4500-10000K	V(99.6-113.6lm); W(113.6-129.5lm); X(129.5-147.7lm)	120lm	205lm	700mA	140	Yes	Tube[2]
ASMT-AN31-NWX00	Neutral White	3500-4500K	W(113.6-129.5lm); X(129.5-147.7lm)	120lm	205lm	700mA	140	Yes	Tube[2]
ASMT-AY31-NUW00	Warm White	2,700 - 3,500K[1]	U(87.4-99.6lm); V(99.6-113.6lm); W(113.6-129.5lm)	95lm	162lm	700mA	140	Yes	Tube[2]
ASMT-AB31-NNP00	Blue	455-475nm	N(18.1-23.5lm); P(23.5-30.6lm)	23	39	700mA	140	Yes	Tube[2]
ASMT-AL31-NRS00	Royal Blue	440-460nm[3,4]	R(515-595mW); S(595-685mW)	600mW	1022mW	700mA	140	Yes	Tube[2]
ASMT-AG31-NUV00	Green	515-535nm[3]	U(87.4-99.6lm); V(99.6-113.6lm)	105lm	168lm	700mA	140	Yes	Tube[2]
ASMT-AA30-ARS00	Amber	587-597nm[3]	R(39.8-51.7lm); S(51.7-67.2lm)	50lm	94lm	700mA	140	No	Tube[2]
ASMT-AH33-ATU00	Red-Orange	610-620nm	T(67.2-87.4lm); U(87.4-99.6lm)	75lm	140m	700mA	140	No	Tube[2]
ASMT-AR30-ARS00	Red	620-635nm	R(39.8-51.7lm); S(51.7-67.2lm)	50lm	94lm	700mA	140	No	Tube[2]
ASMT-AR30-AST00	Red	620-635nm	S(51.7-67.2lm); T(67.2-87.4lm)	60lm	112lm	700mA	140	Yes	Tube[2]

Notes:
1. Narrow Color Temperature selections are available on request.
2. All above listed LEDs are also avaialble in Reel packing.
3. Narrow color bin selections for blue, green, amber and royal-blue are available on request.
4. For royal-blue, the wavelength shown in the above table is peak wavelength.

1W Mini High Power LEDs

Part Number	Color	Color Temperature (K)/ Wavelength (nm)	Flux Bin (Luminous Flux/Radiometric Power @ 350mA)	Luminous Flux (lm) @ 350mA (typ)	Luminous Flux (lm) @ 700mA (typ)	Max. Current	Viewing Angle	Electrically Isolated Metal Slug	Packaging
ASMT-JW11-NWX01	Cool White	4500 - 10,000K[1]	W(113.6-129.5lm); X (129.5-147.7lm)	120lm	-	500mA	140	Yes	Tape & Reel
ASMT-JN11-NWX01	Neutral White	3500 - 4500K[1]	W(113.6-129.5lm); X (129.5-147.7lm)	120lm	-	500mA	140	Yes	Tape & Reel
ASMT-JY11-NVW01	Warm White	2700 - 3500K[1]	V(99.6-113.6lm); W(113.6-129.5lm)	105lm	-	500mA	140	Yes	Tape & Reel
ASMT-JL11-NQS01	Royal Blue	440-460nm[2,3]	Q(435-515mW), R(515-595mW), S(595-685mW)	550mW	-	500mA	165	Yes	Tape & Reel
ASMT-JB11-NNQ01	Blue	455-475nm[2]	N(275-355mW); P(355-435mW); Q(435-515mW)	24lm	-	500mA	165	Yes	Tape & Reel
ASMT-JC11-NTU01	Cyan	490-520nm[2]	T(67.2-87.4lm); U(87.4-99.6lm)	75lm	–	500mA	165	Yes	Tape & Reel
ASMT-JG11-NUW01	Green	515-535nm[2]	U(87.4-99.6lm); V(99.6-113.6lm); W(113.6-129.5lm)	110lm	–	500mA	165	Yes	Tape & Reel
ASMT-JA10-ARS01	Amber	587-597nm[2]	R(39.8-51.7lm); S(51.7-67.2lm)	48lm	–	500mA	165	No	Tape & Reel
ASMT-JH13-AST01	Red-Orange	610-620nm	T(67.2-87.4lm); S(51.7-67.2lm)	62lm	–	500mA	165	No	Tape & Reel
ASMT-JR10-AST01	Red	620-635nm	S(51.7-67.2lm); T(67.2-87.4lm)	60lm	-	500mA	165	Yes	Tape & Reel

Notes:
1. Narrow Color Temperature selections are available on request.
2. Narrow color bin selections for blue, green, amber, royal-blue, and cyan are available on request.
3. For royal-blue, the wavelength shown in the above table is peak wavelength.

3W Mini High Power LEDs

Part Number	Color	Color Temperature (K)/ Wavelength (nm)	Flux Bin (Luminous Flux/Radiometric Power @ 350mA)	Luminous Flux (lm) @ 350mA (typ)	Luminous Flux (lm) @ 700mA (typ)	Max. Current	Viewing Angle	Electrically Isolated Metal Slug	Packaging
ASMT-JW32-NWY01	Cool White	4500-10000K	W(113.6-129.5lm); X(129.5-147.7lm); Y(147.7-168.4lm)	140	239	700mA	140	Yes	Tape & Reel
ASMT-JW32-NWYJ1	Cool White	5000-6300K	W(113.6-129.5lm); X(129.5-147.7lm); Y(147.7-168.4lm)	140	239	700mA	140	Yes	Tape & Reel
ASMT-JN32-NWY01	Neutral White	3500-4500K	W(113.6-129.5lm); X(129.5-147.7lm); Y(147.7-168.4lm)	140	239	700mA	140	Yes	Tape & Reel
ASMT-JN32-NWYH1	Neutral White	3800-4500K	W(113.6-129.5lm); X(129.5-147.7lm); Y(147.7-168.4lm)	140	239	700mA	140	Yes	Tape & Reel
ASMT-JY32-NWY01	Warm White	2700-3500K	W(113.6-129.5lm); X(129.5-147.7lm); Y(147.7-168.4lm)	130	222	700mA	140	Yes	Tape & Reel
ASMT-JY32-NWYK1	Warm White	3050-3500K	W(113.6-129.5lm); X(129.5-147.7lm); Y(147.7-168.4lm)	130	222	700mA	140	Yes	Tape & Reel
ASMT-JL31-NRS01	Royal Blue	440-460nm[3]	R(515-595mW); S(595-685lm)	600mW	1020mW	700mA	165	Yes	Tape & Reel
ASMT-JG31-NUW01	Green	515-535nm[2]	U(87.4-99.6lm); V(99.6-113.6lm); W(113.6-129.5lm)	110lm	176lm	700mA	165	Yes	Tape & Reel
ASMT-JA30-ARS01	Amber	587-597nm[2]	R(39.8-51.7lm); S(51.7-67.2lm)	48lm	86lm	700mA	165	No	Tape & Reel
ASMT-JH33-AST01	Red-Orange	610-620nm	T(67.2-87.4lm) ; S(51.7-67.2lm)	62lm	112lm	700mA	165	No	Tape & Reel
ASMT-JR30-AST01	Red	620-635nm	S(51.7-67.2lm); T(67.2-87.4lm)	58lm	104lm	700mA	165	Yes	Tape & Reel
ASMT-JD33-ANQ01	Deep Red	650-670nm[3]	N(275-355mW); P(355-435mW); Q(435-515mW)	395mW	790mW	700mA	165	Yes	Tape & Reel

Notes:
1. Narrow Color Temperature selections are available on request.
2. Narrow color bin selections for blue, green, amber and royal-blue are available on request.
3. For royal-blue and deep red, the wavelength shown in the above table is peak wavelength.

High CRI 3W Mini High Power LEDs

Part Number	Color	Color Temperature K)/ Wavelength (nm)	Flux Bin (Luminous Flux/Radiometric Power @ 350mA)	Luminous Flux (lm) @ 350mA (typ)	Luminous Flux (lm) @ 700mA (typ)	Max. Current	Viewing Angle	Electrically Isolated Metal Slug	Packaging
ASMT-JW33-NVW00	Cool White	4500-10000K	V(99.6-113.6lm); W(113.6-129.5lm)	110lm	196lm	700mA	140	Yes	Tape & Reel
ASMT-JN33-NVW00	Neutral White	3500-4500K	V(99.6-113.6lm); W(113.6-129.5lm)	110lm	196lm	700mA	140	Yes	Tape & Reel
ASMT-JY33-NTU01	Warm White	2700-3500K	T(67.2-87.4lm); U(87.4-99.6lm); V(99.6-113.6lm)	90lm	160lm	700mA	140	Yes	Tape & Reel

Notes:
1. Narrow Color Temperature selections are available on request.

Package Drawings

1W & 3W High Power LED

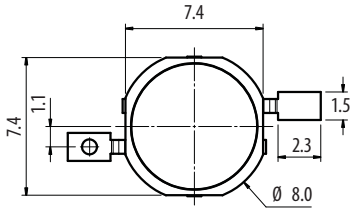

Top View

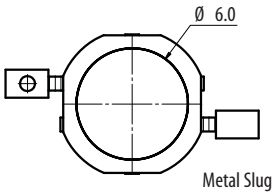

Bottom View

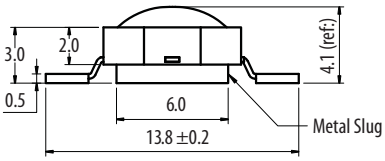

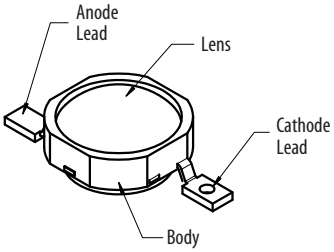

1W & 3W Mini High Power LED

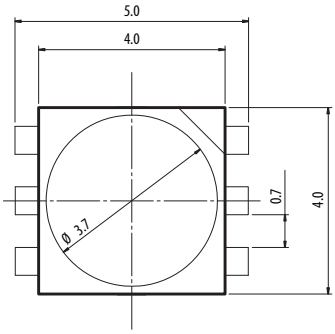

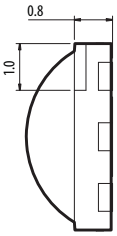

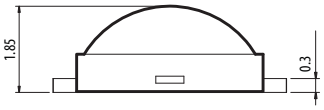

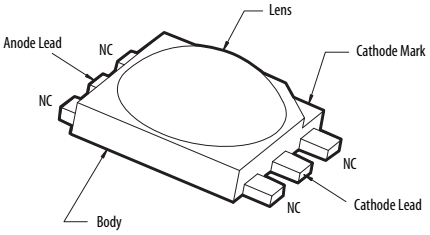

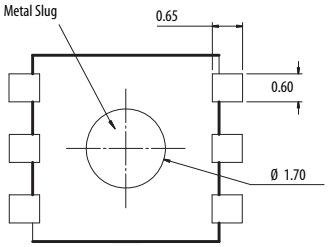

Notes:
1. All dimensions in millimeter.
2. Tolerance is ±0.1mm unless otherwise specified.
3. Metal slug is connected to anode for electrically non-isolated package.
4. Terminal finish: Ag plating.

Moonstone® High Power LEDs

Description

Broadcom's Moonstone High Power LED is a high-performance, energy-efficient device that can handle high thermal and high-driving current. The exposed pad design has excellent heat transfer from the package to the motherboard. The low-profile package design is suitable for a wide variety of applications, especially where height is a constraint. The package is compatible with the SMT reflow soldering process. This will give more freedom and flexibility to the light source designer.

Benefits

- Available in White, Blue, Green, Red and Amber color
- Energy efficient
- Exposed pad for excellent heat transfer
- Suitable for SMT process
- High-current operation
- Long operation life
- Wide viewing angle
- Silicone encapsulation
- Available in emitter and module

Applications

- Portable (flashlight, bicycle headlight)
- Reading light
- Architectural lighting
- Garden lighting
- Decorative lighting
- Street lighting
- Retail lighting
- Contour lighting
- Sign backlighting

Specifications

- InGaN: 3.2V (typ.) at 350mA; 3.6V (typ.) at 700mA
- AlInGaP: 2.1V (typ.) at 350mA
- Viewing angle of 120° and 110°

1W Moonstone™ High Power LEDs

Part Number	Color	Color Temperature K)/ Wavelength (nm)	Flux Bin (Luminous Flux/Radiometric Power @ 350mA)	Luminous Flux (lm) @ 350mA (typ)	Luminous Flux (lm) @ 500mA (typ)	Max. Current	Viewing Angle	Electrically Isolated Metal Slug	Packaging
ASMT-MW06-NMN00	Cool White	4,000 - 10,000K	M(95-110lm); N (110-125lm)	105	144	500mA	110	Yes	Tube
ASMT-MWB6-NMN00	Cool White	4,000 - 10,000K	M(95-110lm); N (110-125lm)	100	137	500mA	110	Yes	Tube
ASMT-MW04-NMN00	Cool White	4,000 - 10,000K	M (95-110lm); N (110-125lm)	105	–	350mA	110	Yes	Tube[2]
ASMT-MWB4-NMN00	Cool White	4,000 - 10,000K	M (95-110lm); N (110-125lm)	95	–	350mA	110	Yes	Tube[2]
ASMT-MY06-NMN00	Warm White	2,600K-4,000K	M (95-110lm); N (110-125lm)	100	137	500mA	110	Yes	Tube[2]
ASMT-MYB6-NMN00	Warm White	2,600K-4,000K	M (95-110lm); N (110-125lm);	98	134	500mA	110	Yes	Tube[2]
ASMT-MY04-NLM00	Warm White	2,600K-4,000K	L (73-95lm); M (95-110lm)	100	–	350mA	110	Yes	Tube[2]
ASMT-MYB4-NLM00	Warm White	2,600K-4,000K	L (73-95lm); M (95-110lm)	90	–	350mA	110	Yes	Tube[2]
ASMT-MB00-NDF00	Blue	455-475nm[3]	D(11.5-15lm); E(15-19.5lm); F(19.5-25.5lm)	15	–	350mA	120	Yes	Tube[2]
ASMT-MG00-NLM00	Green	515-535nm[3]	L(73.0-95.0lm); M(95.0-124.0lm)	85	–	350mA	120	Yes	Tube[2]
ASMT-MA00-AHJ00	Amber	582-594.5nm[3]	H(33-43lm); J(43-56lm)	40lm	-	350mA	120	No	Tube[2]
ASMT-MR00-AHJ00	Red	620-635nm	H(33-43lm); J(43-56lm)	40	–	350mA	120	No	Tube[2]

Notes:
1. Narrow Color Temperature selections are available on request.
2. All above listed LEDs are also avaialble in Reel packing.
3. Narrow color bin selections for blue, green and amber are available on request.

3W Moonstone™ High Power LEDs

Part Number	Color	Color Temperature (K)/ Wavelength (nm)	Flux Bin (Luminous Flux/Radiometric Power @ 350mA)	Luminous Flux (lm) @ 350mA (typ)	Luminous Flux (lm) @ 700mA (typ)	Max. Current	Viewing Angle	Electrically Isolated Metal Slug	Packaging
ASMT-MW22-NNP00	Cool White	4000-10000K	N(110-125lm); P(125-140lm)	120	205	700mA	110	Yes	Tube[2]
ASMT-MWE2-NNP00	Cool White Diffused	4000-10000K	N(110-125lm); P(125-140lm)	115	196	700mA	110	Yes	Tube[2]
ASMT-MY22-NMP00	Warm White	2600-4000K	M(95-110lm); N(110-125lm), P(125-140lm)	100	170	700mA	110	Yes	Tube[2]
ASMT-MYE2-NMP00	Warm White Diffused	2600-4000K	M(95-110lm); N(110-125lm), P(125-140lm)	98	167	700mA	110	Yes	Tube[2]

Notes:
1. Narrow Color Temperature selections are available on request.
2. All above listed LEDs are also avaialble in Reel packing.

3W RGB Tri-Color Moonstone™ High Power LED

Part Number	Color	Color Temperature (K)/ Wavelength (nm)	Flux Bin (Luminous Flux/Radiometric Power @ 350mA)	Luminous Flux (lm) @ 700mA (typ)	Max. Current	Viewing Angle	Electrically Isolated Metal Slug	Packaging
ASMT-MT00-00001	Red	620-635nm	H(33-43lm); J(43-56lm)	40	350mA	120	No	Tape and Reel
	Green	515 - 535nm[1]	L(73-95lm); M(95-124lm)	85	350mA	120	Yes	
	Blue	455 - 475nm[1]	E(15-19.5lm), F(19.5-25.5lm), G(25.5-33lm)	22	350mA	120	Yes	

Notes:
1. Narrow Color Temperature selections are available on request.

Package Drawings

Moonstone LED Emitters

1W and 3W Moonstone

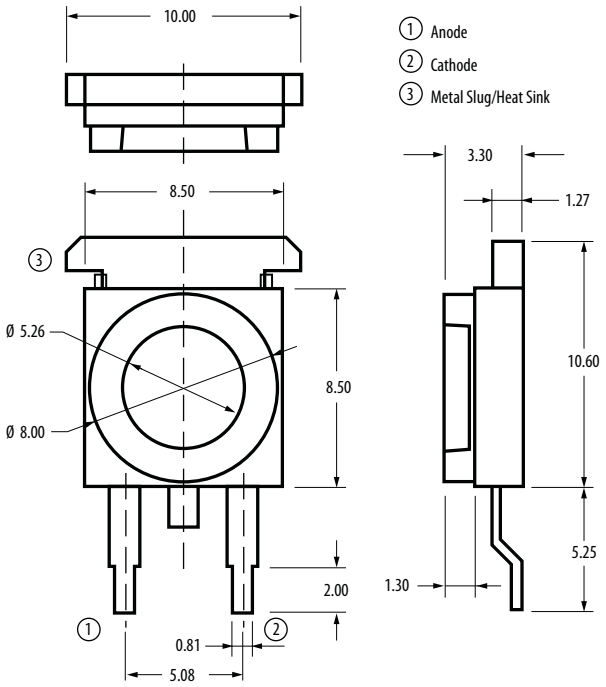

Notes:
1. All Dimensions in millimeters.
2. Tolerance is ±0.1 mm unless otherwise specified.
3. Metal slug is connected to anode for electrically non-isolated option.

3W RGB Tri-color Moonstone

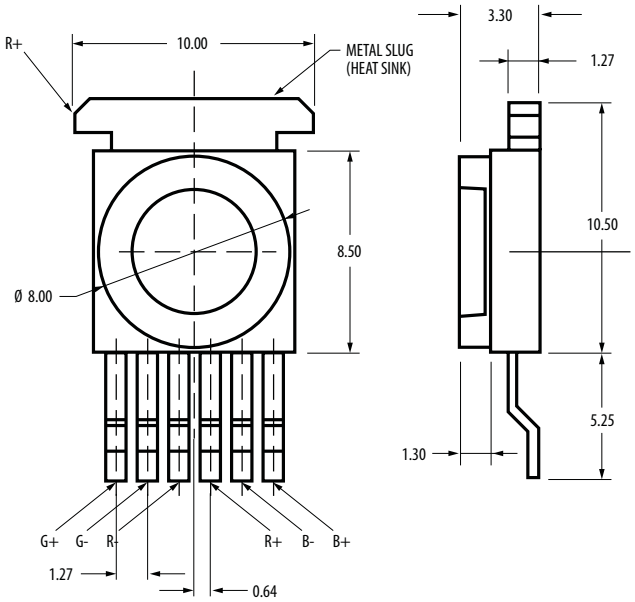

Notes:
1. All dimensions in millimeters.
2. Tolerance is ±0.1 mm unless otherwise specified.
3. Metal slug is connected to the anode of Red.

1W 3030 High Power LEDs

Description

The Broadcom 1W High Power White LED is a high performance energy efficient device that can handle high thermal and high driving current.

The package is compatible with reflow soldering process. To facilitate easy pick-and-place assembly, the LEDs are packed in tape and reel. Every reel is shipped in single intensity and color bin to provide close uniformity.

Applications

- Retail display lighting
- Under cabinet lighting
- Incandescent lamp replacement
- Indoor commercial and residential lighting
- Indoor decorative lighting

Benefits

- Available in 2700K, 3000K, 3500K, 4000K, 5000K, 5700K, 6200K, and 6500K
- Small footprint and low profile
- Energy efficient
- Compatible with reflow soldering process
- High current operation
- Long operation life
- Wide viewing angle
- Silicone encapsulation
- MSL 3 products

1W 3030 White High Power LEDs

Part Number	Color	Color Temperature (K)	Luminous Flux, ΦV (lm)			Test Current (mA)	Viewing Angle (°)	CRI
			Min	Typ	Max			Min
ASMF-PWG2-N45H0	InGaN White	6500	98.0	105.0	118.4	150	120	80
ASMF-PWG2-N45G0	InGaN White	6200	98.0	105.0	118.4	150	120	80
ASMF-PWG2-N45F0	InGaN White	5700	98.0	105.0	118.4	150	120	80
ASMF-PWG2-N45E0	InGaN White	5000	98.0	105.0	118.4	150	120	80
ASMF-PWG2-N45D0	InGaN White	4000	98.0	105.0	118.4	150	120	80
ASMF-PWG2-N35C0	InGaN White	3500	89.2	102.0	118.4	150	120	80
ASMF-PWG2-N35B0	InGaN White	3000	89.2	100.0	118.4	150	120	80
ASMF-PWG2-N35A0	InGaN White	2700	89.2	100.0	118.4	150	120	80

Part Numbering System

A	S	M	F	-	P	W	x1	2	-	N	X_2	X_3	X_4	0

Code	Description	Option	
X_1	Color Rendering Index	A	CRI ≥ 80
X_2	Minimum flux bin	3	89.2–98.0 lm
X_3	Maximum flux bin	4	98.0–107.7 lm
		5	107.7–118.4 lm
X_4	Color bin	A	2700K (bin: 27S)
		B	3000K (bin: 29S)
		C	3500K (bin: 34S)
		D	4000K (bin: 41S)
		E	5000K (bin: 50S)
		F	5700K (bin: 58G)
		G	6200K (bin: 62G)
		H	6500K (bin: 64S)

Example: ASMF-PWG2-N35A0

X_1 = G CRI ≥ 80
X_2 = 3 Minimum flux bin 3
X_3 = 5 Maximum flux bin 5
X_4 = A Color bin 27S

Bin Information

Intensity Bins (CAT)

Bin ID	Luminous Fllux (lm)	
	Min.	Max.
3	89.2	98.0
4	98.0	107.7
5	107.7	118.4

Tolerance ±12%

Forward Voltage Bins (VF)

Bin ID	Forward voltage (V)	
	Min.	Max.
F21	6.0	6.2
F22	6.2	6.4
F23	6.4	6.6
F24	6.6	6.8
F25	6.8	7.0

Tolerance ±0.1V

Chromaticity Diagram

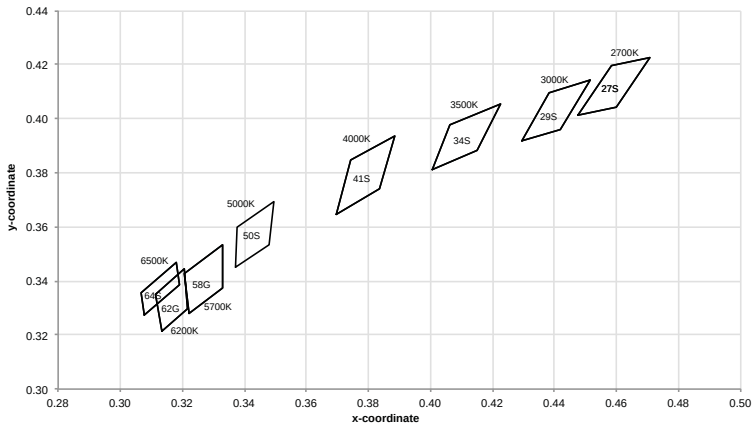

Color Bins (BIN)

CCT	Bin ID	Chromaticity coordinates	
		X	y
2700	27S	0.4475	0.4012
		0.4582	0.4199
		0.4708	0.4228
		0.4598	0.4041
3000	29S	0.4295	0.3918
		0.4381	0.4097
		0.4515	0.4145
		0.4420	0.3962
3500	34S	0.4006	0.3811
		0.4061	0.3980
		0.4226	0.4056
		0.4150	0.3881
4000	41S	0.3699	0.3646
		0.3743	0.3846
		0.3885	0.3934
		0.3835	0.3741
5000	50S	0.3372	0.3449
		0.3378	0.3596
		0.3496	0.3694
		0.3478	0.3533
5700	58G	0.3220	0.3280
		0.3209	0.3425
		0.3330	0.3533
		0.3329	0.3375
6200	62G	0.3133	0.3214
		0.3113	0.3350
		0.3208	0.3444
		0.3219	0.3296
6500	64S	0.3079	0.3274
		0.3068	0.3354
		0.3181	0.3467
		0.3192	0.3387

Tolerance ±0.01

Example of bin information on label:

CAT: 3 Flux bin 3
BIN: 27S Color bin 27S
VF: F21 VF bin F21

1W Tri-color High Power LEDs

Description

The 1W Tri-Color High Power LED Light Source is a high performance energy efficient device which can handle high thermal and high driving current.

The low profile package design is suitable for a wide variety of applications especially where height is a constraint.

The package is compatible with eflow soldering process. This will give more freedom and flexibility to the light source designer.

Benefits

- Available in tri-color
- Energy efficient
- Compatible with reflow soldering process
- High current operation
- Long operation life
- Silicone encapsulation
- MSL 1 products
- MSL 3 products

Applications

- Sign backlight
- Retail display
- Commercial lighting
- Decorative lighting
- Architectural lighting

1W Tri-color High Power LEDs

Part Number	Color	Wavelength (nm)	Flux Bin (Luminous Flux @ 150mA)	Luminous Flux (lm) @ 150mA (typ)	Max. Current	Viewing Angle
ASMG-PT00-00001	Red	620-630nm	25-35lm	28lm	200mA	155
	Green	525-535nm	38-54lm	45lm	200mA	155
	Blue	455-460nm	8.1-11.5lm	9.5lm	200mA	155

Part Numbering System

A	S	M	G	-	P	x1	0	0	-	0	X_2	X_3	X_4	1

Code	Description	Option	
X_1	Color	T	Tri-color
X_2 X_3	Minimum flux bin (lm) Maximum flux bin (lm)	00	Red: 25.0 – 35.0lm Green: 38.0 – 54.0lm Blue: 8.1 – 11.5lm
X_4	Color bin	0	Full distribution

Bin Information

Flux Bin Limit (CAT)

Bin ID	Bin	Luminous FIlux (lm)	
		Min.	Max.
Red		25.0	35.0
Green		38.0	54.0
Blue		8.1	11.5

Tolerance = ±10%

Color bin Limit (BIN)

Bin ID	Bin	Luminous FIlux (lm)	
		Min.	Max.
Red	4	620.0	630.0
Green	2	525.0	535.0
Blue	A	455.0	460.0

Tolerance = ±1.0nm

Example of bin information on reel and packaging label:

BIN: 42A Red color bin 4
Green color bin 2
Blue color bin A

3W Tri-color High Power LEDs

Description

The 3W Tri-Color High Power LED Light Source is a high performance energy efficient device which can handle high thermal and high driving current.

The low profile package design is suitable for a wide variety of applications especially where height is a constraint.

The package is compatible with reflow soldering process. This will give more freedom and flexibility to the light source designer.

Benefits

- Available in tri-color
- Energy efficient
- Compatible with reflow soldering process
- High current operation
- Long operation life
- Silicone encapsulation
- MSL 1 products

Applications

- Sign backlight
- Retail display
- Commercial lighting
- Decorative lighting
- Architectural lighting

3W Tri-color High Power LEDs

Part Number	Color	Wavelength (nm)	Flux Bin (Luminous Flux @ 350mA)	Luminous Flux (lm) @ 350mA (typ)	Max. Current	Viewing Angle
ASMG-ST00-00001	Red	613.5-631nm	45-65lm	55lm	350mA	135
	Green	515-535nm	80-112lm	95lm	350mA	170
	Blue	455-475nm	18-26lm	20lm	350mA	135

Part Numbering System

A	S	M	G	-	S	T	0	0	-	0	X_1	X_2	X_3	1

Code	Description	Option	
X_1 X_2	Flux bin selection	00	Red: 45-65lm Green: 80-112lm Blue: 18-26lm
X_3	Color bin selection	0	Red: bin 2 and 4 Green: bin A,1,2 and 3 Blue : bin A,1,2 and 3

Bin Information

Flux Bin Limit (CAT)

Bin ID	Bin	Luminous FIlux (lm)	
		Min.	Max.
Red		45	65
Green		80	112
Blue		18	26

Tolerance = ±10%

Color bin Limit (BIN)

Color	Bin	Dominant Wavelength (nm) @ 350mA	
		Min.	Max.
Red	2	613.5	620.5
	4	620.5	631.0
Green	A	515.0	520.0
	1	520.0	525.0
	2	525.0	530.0
	3	530.0	535.0
Blue	A	455.0	460.0
	1	460.0	465.0
	2	465.0	470.0
	3	470.0	475.0

Tolerance = ±1 nm

Example of bin information on reel and packaging label:

BIN: 2A3 Red color bin 2
Green color bin A
Blue color bin 3

Package Drawings

1W 3030 White High Power LEDs

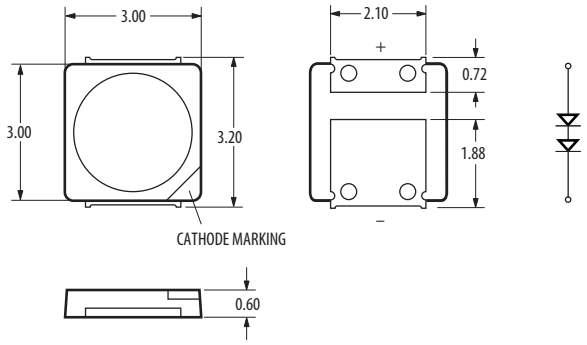

Notes:
1. All dimensions in millimeters (mm).
2. Tolerance is ±0.20mm unless otherwise specified.
3. Encapsulation = silicone.
4. Terminal finish = silver plating.

1W Tri-color High Power LEDs

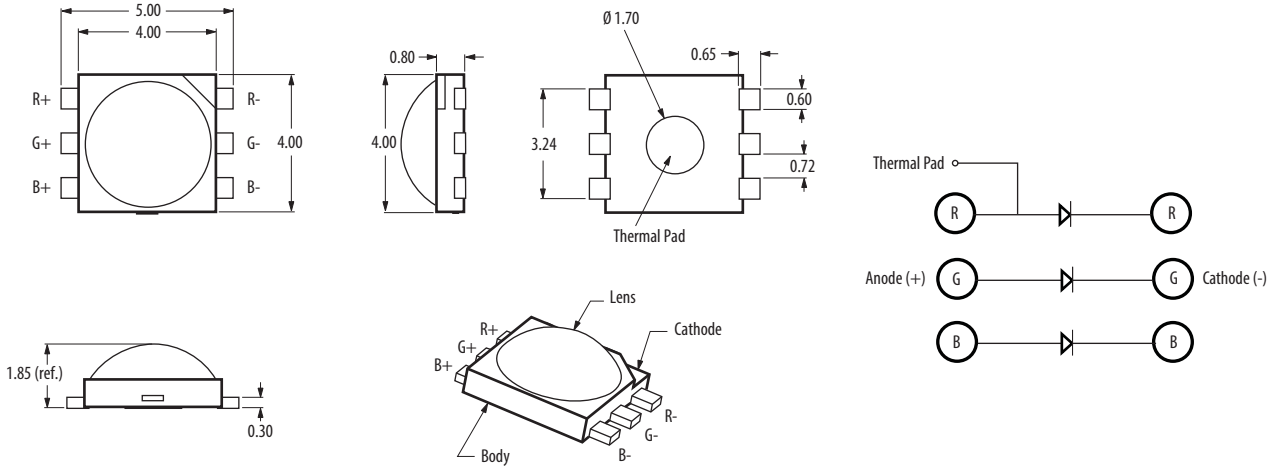

Notes:
1. All dimensions in millimeters (mm).
2. Tolerance is ±0.20mm unless otherwise specified.
3. Encapsulation = silicone.
4. Terminal finish = silver plating.
5. Thermal pad is connected to anode of Red.

Package Drawings

3W Tri-color High Power LEDs

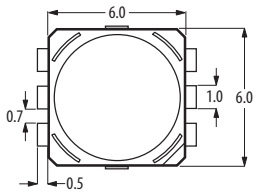

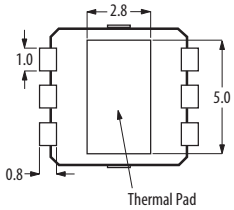

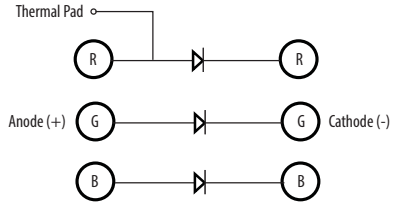

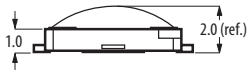

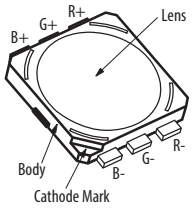

Notes:
1. All dimensions in millimeters (mm).
2. Tolerance is ±0.20mm unless otherwise specified.
3. Encapsulation = silicone.
4. Terminal finish = silver plating.
5. Thermal pad is connected to anode of Red.

Standard Through-hole Lamps

Description

Broadcom offers four types of technology-based LEDs. GaP and AlGaAs based technologies are suitable for low to moderate light output requirements. AlInGaP and InGaN product offering are suitable for high brightness needs. Through-hole LEDs are offered in a variety of packages such as 3 mm, 5 mm, rectangular, bicolor, integrated resistors in standard and low current options.

These devices are molded from advanced optical grade epoxy, which provide superior high temperature performance and excellent moisture resistance.

Through-hole LEDs are suitable for all applications requiring backlighting and status indication. Consumer electronics and automotive interiors use LEDs to add value to their products. Low power consumption, high reliability and a broad range of colors and packages are just a few reasons why.

Benefits

- Excellent product quality and reliability
- Wide range of products
- Competitive pricing
- Wide operating temperature range
- With minor electrical/ optical changes
- Lower power consumption
  - High efficiency, low drive currents and low driving voltages required
- Thin, light weight and robust packaging
  - Excellent performance even under vibration and mechanical shock
- Different material technologies available in standard GaP LED lamps
  - Choice of colors (560 nm – 626 nm): Green, Yellow, Amber, Orange and Red
- Red color using AlGaAs technology.
- Five colors available with high luminous intensity in AlInGaP LED lamps
  - Amber (590 nm), Red (626 nm), Deep Red (635 nm), Orange (605 nm) and Red-Orange (615 nm)
- Two colors available with high luminous intensity in InGaN LED lamps
  - Blue (470 nm) and Green (527 nm)
- Several packaging options
  - Different sizes with aclear or diffused lens, several lead configurations and different spatial radiation patterns available in bulk, ammo-pack, right angle housing and tape and reel

Applications

- Consumer
  - Ovens, washers, etc.
  - Audio, hi-fi and electrical appliances
  - Gaming and vending machines
  - Electronic toys and games
- Industrial
  - Sensors
  - Instruments
  - Measurement equipment
- Automotive and Other
  - Automotive interior
  - Exercise equipment
  - Medical equipment
  - Front panel industrial equipment

Standard Through-hole LED Lamps

Part Number	Color	Dominant Wavelength (nm)	Viewing Angle	Lens	Intensity		Vf Typ. (V)	Test Current (mA)
					Min. (mcd)	Typ. (mcd)		
3 mm (T1) LED Lamps — Standard Current								
HLMP-1301-G0002	GaP Red	626	60°	Tinted, Diffused	8.6	11	1.9	10
HLMP-1321	GaP Red	626	45°	Tinted, Non-diffused	8.6	30	1.9	10
HLMP-1340	GaP Red	626	45°	Micro-tinted, Non-diffused	35.2	55	1.9	20
HLMP-1401-E0000	GaP Yellow	585	60°	Tinted, Diffused	5.7	-	2	10
HLMP-1440	GaP Yellow	585	45°	Micro-tinted, Non-diffused	23.5	45	2.1	20
HLMP-1503	GaP Green	569	60°	Tinted, Diffused	4.2	8.5	2.1	10
HLMP-1521	GaP Green	569	45°	Tinted, Non-diffused	6.7	22	2.1	10
HLMP-1540	GaP Green	569	45°	Untinted, Non-diffused	27.3	45	2.2	20
HLMP-K101	AlGaAs Red	637	60°	Tinted, Diffused	22	45	1.8	20
HLMP-K105	AlGaAs Red	637	45°	Untinted, Non-diffused	35.2	65	1.8	20
HLMP-K640	GaP Green	560	45°	Untinted, Non-diffused	4.2	21	2.2	20
HLMP-Y601-J0000	AlInGaP Red	627	45	Untinted, Non-diffused	240	680	2.2	20
HLMP-Y651-G0000	AlInGaP Deep Red	638	45	Untinted, Non-diffused	140	300	2.2	20
HLMP-Y701-G0000	AlInGaP Amber	592	45	Untinted, Non-diffused	140	400	2.2	20
HLMP-Y802-F0000	AlInGaP Green	572	45	Tinted, Non-diffused	110	240	2.4	20
HLMP-Y901-J0000	AlInGaP Yellow Orange	605	45	Untinted, Non-diffused	240	680	2	20
HLMP-Y951-K0000	AlInGaP Red Orange	615	45	Untinted, Non-diffused	310	680	2	20
HLMP-KA45-E0000	InGaN Blue	464	50	Untinted, Non-diffused	85	480	3.5	20
3 mm (T1) LED Lamps — Autoinsertable								
HLMP-NG05	AlInGaP Red	626	45°	Micro-tinted, Non-diffused	90.2	435	1.90	20
HLMP-NG07	AlInGaP Red	626	60°	Micro-tinted, Non-diffused	90.2	435	1.90	20
HLMP-NL06	AlInGaP Amber	590	60°	Micro-tinted, Non-diffused	96.2	450	2.02	20
HLMP-NS30-J0000	InGaN Blue	470	30°	Untinted, Non-diffused	240	550	3.6	20
HLMP-NM31-R0000	InGaN Green	529	30°	Untinted, Non-diffused	1500	2800	3.3	20
HL3P-BA60-J00DD	AlInGaP Amber	587	60°	Tinted, Diffused	240	450	2.0	20
HL3P-BF60-C00DD	AlInGaP Yellow Green	570	60°	Tinted, Diffused	50	100	2.0	20
HL3P-BJ60-J00DD	AlInGaP Orange	605	60°	Tinted, Diffused	240	450	2.0	20
HL3P-BR60-J00DD	AlInGaP Red	627	60°	Tinted, Diffused	240	380	2.0	20
HL3P-NA45-J00DD	AlInGaP Amber	587	45°	Untinted, Non diffused	240	600	2.0	20
HL3P-NF45-D00DD	AlInGaP Yellow Green	570	45°	Untinted, Non diffused	65	200	2.0	20
HL3P-NJ45-J00DD	AlInGaP Orange	605	45°	Untinted, Non diffused	240	600	2.0	20
HL3P-NR45-J00DD	AlInGaP Red	627	45°	Untinted, Non diffused	240	500	2.0	20
3 mm (T1) 5V, 12V Integrated Resistor LED Lamps								
HLMP-1621[1]	GaP Yellow	585	60°	Tinted, Diffused	2.2	8	8	–
HLMP-1640-B00A2[2]	GaP Green	569	60°	Tinted, Diffused	1.6	8	8	–

Notes:
1. Operating Voltage = 12V.
2. Operating Voltage = 5V.

Standard Through-hole LED Lamps

Part Number	Color	Dominant Wavelength (nm)	Viewing Angle	Lens	Intensity		Vf Typ. (V)	Test Current (mA)
					Min. (mcd)	Typ. (mcd)		
5mm (T1 3/4) LED Lamps - Standard Current								
HLMP-3301	GaP Red	626	60°	Tinted, Diffused	5.4	7	1.9	10
HLMP-3401	GaP Yellow	585	60°	Tinted, Diffused	5.7	8	2	10
HLMP-3507	GaP Green	569	60°	Tinted, Diffused	4.2	5.2	2.1	10
HLMP-3950	GaP Green	569	24°	Micro-tinted, Non-diffused	111.7	265	2.2	20
HLMP-C008-U0000	AlInGaP Red	626	8°	Untinted, Non-diffused	2900	6000	1.9	20
HLMP-C025-P0000	AlInGaP Red	626	25°	Untinted, Non-diffused	500	1000	1.9	20
HLMP-C208-S0000	AlInGaP Amber	590	8°	Untinted, Non-diffused	2600	3000	1.9	20
HLMP-C225-O0000	AlInGaP Amber	590	25°	Untinted, Non-diffused	450	800	1.9	20
HLMP-C608-R0000	AlInGaP Red	635	8°	Untinted, Non-diffused	1000	2000	1.9	20
HLMP-C625-P0000	AlInGaP Red	635	25°	Untinted, Non-diffused	500	700	1.9	20
HLMP-DB25-B0000	GaN Blue	462	25°	Untinted, Non-diffused	40	100	4	20
HLMP-DM25-J0000	InGaN Green	527	25°	Untinted, Non-diffused	240	970	3.8	20
HLMP-DS25-F0000	InGaN Blue	470	25°	Untinted, Non-diffused	110	260	3.6	20
HL5P-BA60-K0000	AlInGaP Amber	587	60°	Tinted, Diffused	310	460	2.0	20
HL5P-BF60-D0000	AlInGaP Yellow Green	570	60°	Tinted, Diffused	65	100	2.0	20
HL5P-BJ60-K0000	AlInGaP Orange	605	60°	Tinted, Diffused	310	440	2.0	20
HL5P-BR60-J0000	AlInGaP Red	627	60°	Tinted, Diffused	240	360	2.0	20
HL5P-NA45-M0000	AlInGaP Amber	587	45°	Untinted, Non diffused	520	850	2.0	20
HL5P-NF45-G0000	AlInGaP Yellow Green	570	45°	Untinted, Non diffused	140	250	2.0	20
HL5P-NJ45-M0000	AlInGaP Orange	605	45°	Untinted, Non diffused	520	850	2.0	20
HL5P-NR45-K0000	AlInGaP Red	627	45°	Untinted, Non diffused	310	500	2.0	20
HL5P-NA25-P0000	AlInGaP Amber	587	25°	Untinted, Non diffused	880	1400	2.0	20
HL5P-NF25-J0000	AlInGaP Yellow Green	570	25°	Untinted, Non diffused	240	500	2.0	20
HL5P-NJ25-P0000	AlInGaP Orange	605	25°	Untinted, Non diffused	880	1400	2.0	20
HL5P-NR25-N0000	AlInGaP Red	627	25°	Untinted, Non diffused	680	1000	2.0	20
5 mm (T1 3/4) LED Lamps — Low Current								
HLMP-4700	GaP Red	626	50°	Tinted, Diffused	1.3	2.3	1.7	2
HLMP-4719	GaP Yellow	585	50°	Tinted, Diffused	0.9	2.1	1.8	2
HLMP-4740	GaP Green	569	50°	Tinted, Diffused	1	2.3	1.9	2
HLMP-D150	AlGaAs Red	637	65°	Tinted, Diffused	1.3	3	1.6	1

Standard Through-hole Lamps

Part Number	Color	Dominant Wavelength (nm)	Viewing Angle	Lens	Intensity		Vf Typ. (V)	Test Current (mA)
					Min. (mcd)	Typ. (mcd)		
2 mm x 5 mm Rectangular LED Lamps								
HLMP-S201	GaP Red	626	110°	Tinted, Diffused	3.4	7.5	1.9	20
HLMP-S301	GaP Yellow	585	110°	Tinted, Diffused	2.2	4	2.1	20
HLMP-S501	GaP Green	569	110°	Tinted, Diffused	4.2	8	2.2	20
2mm x 5mm Bicolor Rectangular LED Lamps								
HLMP-0800	GaP Green	570	100°	Untinted, Diffused	2.6	-	2.2	20
	GaP Red	626	100°	Untinted, Diffused	2.1	-	1.9	20
HLMP-0805	GaP Green	570	100°	Untinted, Diffused	2.6	-	2.2	20
	GaP Yellow	585	100°	Untinted, Diffused	1.4	-	2.1	20
5 mm (T1 3/4) LED Lamps — Bicolor								
HLMP-4000	GaP Green	570	65°	Untinted, Diffused	4.2	-	2.2	10
	GaP Red	626	65°	Untinted, Diffused	2.1	-	1.9	10
HLMP-4015	Gap Green	570	65°	Untinted, Non-Diffused	20	-	2.2	20
	GaP Yellow	585	65°	Untinted, Non-Diffused	20	-	2.6	20

Intensity Bin Limits

Bin ID	Intensity (mcd)	
Red / Orange	Min.	Max.
A	0.6	0.9
B	0.9	1.5
C	1.5	2.4
D	2.4	3.8
E	3.8	6.1
F	6.1	9.7
G	9.7	15.5
H	15.5	24.8
I	24.8	39.6
J	39.6	63.4
K	63.4	101.5
L	101.5	162.4
M	162.4	234.6
N	234.6	340.0
O	340	540
P	540	850
Q	850	1200
R	1200	1700
S	1700	2400
T	2400	3400
U	3400	4900
V	4900	7100
W	7100	10200
X	10200	14800
Y	14800	21400
Z	21400	30900

Tolerance: ±18%

Bin ID	Intensity (mcd)	
Yellow / Amber	Min.	Max.
A	1.0	1.6
B	1.6	2.5
C	2.5	4.0
D	4.0	6.5
E	6.5	10.3
F	10.3	16.6
G	16.6	26.5
H	26.5	42.3
I	42.3	67.7
J	67.7	108.2
K	108.2	173.2
L	173.2	250.0
M	250	360
N	360	510
O	510	800
P	800	1250
Q	1250	1800
R	1800	2900
S	2900	4700
T	4700	7200
U	7200	11700
V	11700	18000
W	18000	27000

Tolerance: ±18%

Bin ID	Intensity (mcd)	
Green / Emerald Green *	Min.	Max.
A	1.1	1.8
B	1.8	2.9
C	2.9	4.7
D	4.7	7.6
E	7.6	12.0
F	12.0	19.1
G	19.1	30.7
H	30.7	49.1
I	49.1	78.5
J	78.5	125.7
K	125.7	201.1
L	201.1	289.0
M	289	417
N	417	680
O	680	1100
P	1100	1800
Q	1800	2700
R	2700	4300
S	4300	6800
T	6800	10800
U	10800	16000
V	16000	25000
W	25000	40000

* Except InGaN Green

Tolerance: ±18%

Bin ID	Intensity (mcd)	
InGaN Green/ Blue and HL3P-xxxx/HL5P-xxxx/ HLMP-Yxxx AlInGaP series	Min.	Max.
A	30	40
B	40	50
C	50	65
D	65	85
E	85	110
F	110	140
G	140	180
H	180	240
J	240	310
K	310	400
L	400	520
M	520	680
N	680	880
P	880	1150
Q	1150	1500
R	1500	1900
S	1900	2500
T	2500	3200
U	3200	4200
V	4200	5500
W	5500	7200
X	7200	9300
Y	9300	12000

Tolerance: ±15%

Color Bin Limits

Bin ID	Dominant Wavelength (nm)	
Orange	Min.	Max.
2	599.5	602.0
3	602.0	604.5
4	604.5	607.5
5	607.5	610.5
Yellow	Min.	Max.
1	582.0	584.5
3	584.5	587.0
2	587.0	589.5
4	589.5	592.0
5	592.0	593.0
Amber	Min.	Max.
1	584.5	587.0
2	587.0	589.5
4	589.5	592.0
6	592.0	594.5
7	594.5	597.0
Emerald Green	Min.	Max.
1	582.0	584.5
3	584.5	587.0
2	587.0	589.5
4	589.5	592.0
5	592.0	593.0

Tolerance: ±1.0nm

Bin ID	Dominant Wavelength (nm)	
Green (except InGaN Green	Min.	Max.
6	561.5	564.5
5	564.5	567.5
4	567.5	570.5
3	570.5	573.5
2	573.5	576.5
Yellow	Min.	Max.
1	520.0	524.0
3	524.0	528.0
2	528.0	532.0
4	532.0	536.0
5	536.0	540.0
Blue	Min.	Max.
1	460.0	464.0
2	464.0	468.0
3	468.0	472.0
4	472.0	476.0
5	476.0	480.0

Tolerance: ±1.0nm

Package Drawings

3 mm (T1) LED Lamps – Autoinsertable Package

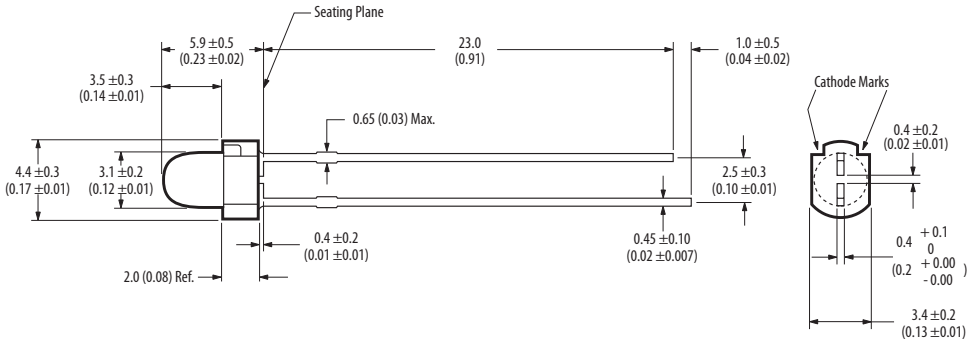

3 mm (T1) LED Lamps Package

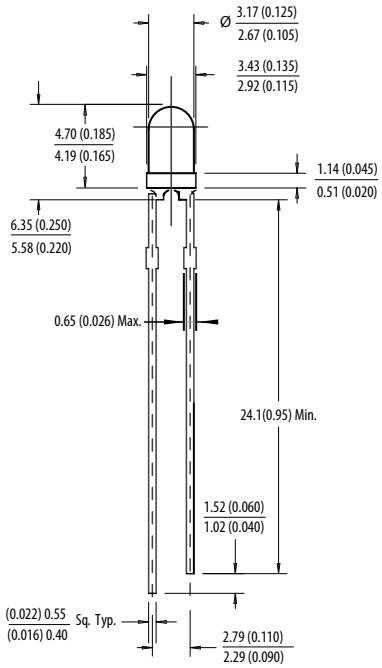

For HL3P-xxxx series

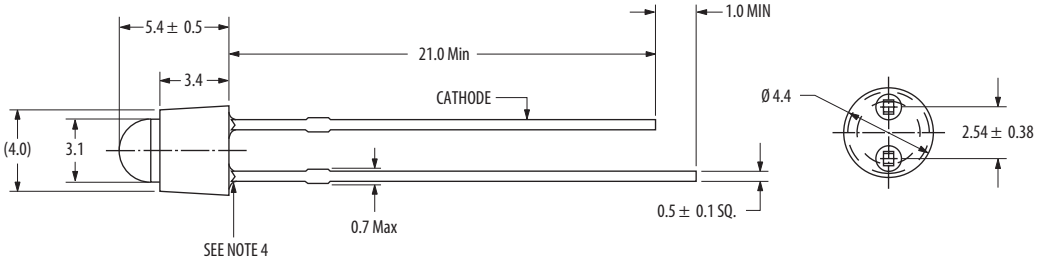

Notes:
1. All dimensions in millimeters (inches). Dimension in bracket is for reference only.
2. Tolerance is ±0.30mm unless otherwise specified.
3. Lead spacing is measured at where the leads emerge from the package.
4. Epoxy meniscus is 1.0mm max below the body.

3 mm (T1) AlInGaP LED Lamps Package

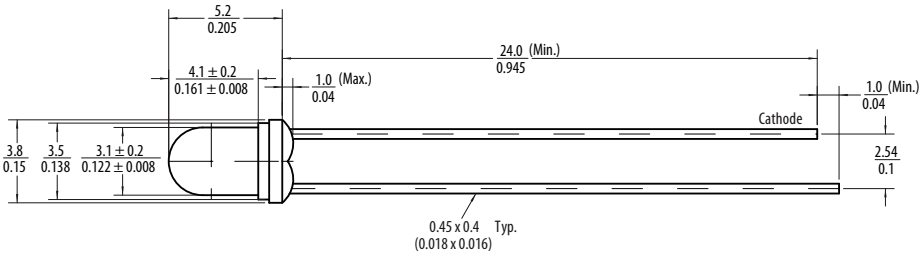

Notes:
1. All dimensions in millimeters (inches).
2. Leads are mild steel. Solder coated.
3. Epoxy Meniscus of 0.8 mm (0.03 in.) maximum may extend to the leads.

5 mm (T1 3/4) LED Lamps Package

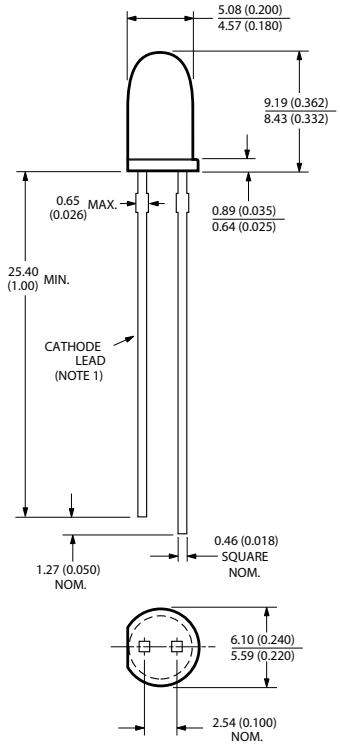

5 mm (T1-3/4) LED Lamps - Bicolor

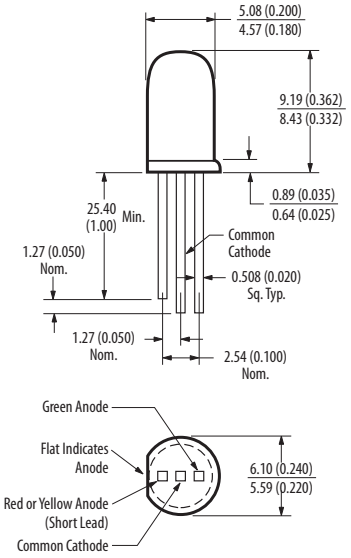

2 x 5 mm Rectangular LED Lamps Package

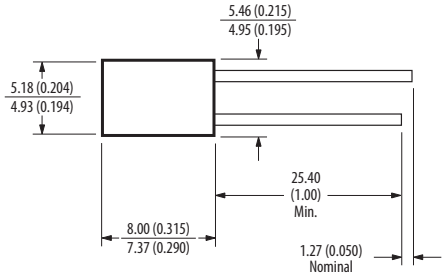

For HL5P-xxxx series

5 mm VA25

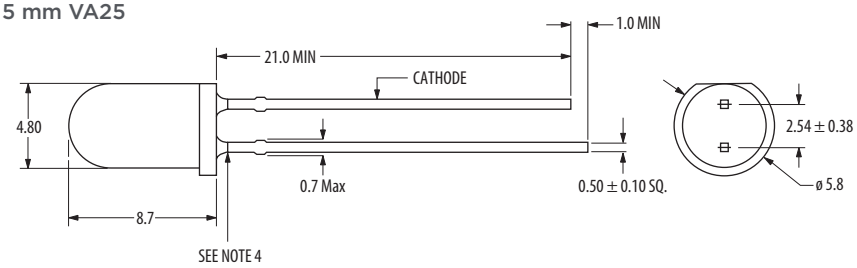

5 mm VA45/60

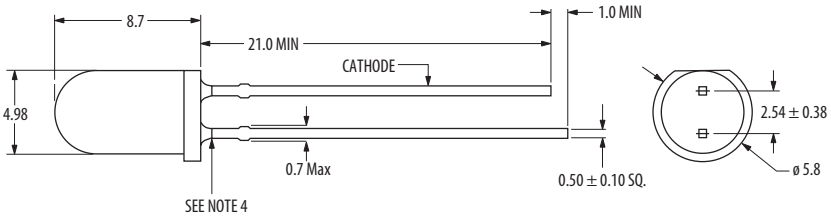

Notes:
1. All dimensions in millimeters (mm).
2. Tolerance is ±0.25mm unless otherwise specified.
3. Lead spacing is measured at where the leads emerge from the package.
4. Epoxy meniscus is 1.0mm max below the body.

Subminiature Lamps

Description

Broadcom's Subminiature Lamps are designed for modern printed circuit (PC) boards, replacing through-hole mounted components for many traditional functions with smaller components, sized for closer placement.

Subminiature lamp components are available in several lead configurations and can be used for top mount, reverse mount, and through-hole applications. The lead configurations are 'Gull Wing'–011 option, 'Yoke Bend'–021 option and 'Z Bend'–031 option. A variety of packages are available, such as flat top, dome and rectangular in standard or low current options.

Besides this, PCB based subminiature lamps are available as well. These lamps come in un-tinted, non-diffused package to cater for various product themes and ease handling applications. The small size, narrow footprint and high brightness make these LEDs excellent for backlighting, status indication and panel illumination applications.

Benefits

- Excellent product quality
- Wide range of product offering
- Competitive pricing
- Can be used with surface mount or through-hole applications
- High reliability
  - No replacement for life of equipment
- Wide operating temperature range
  - Minor electrical/optical changes
- Lower power consumption
  - High efficiency, low drive currents required, low driving voltages
- Thin, light-weight and robust packaging
  - Excellent performance even under vibration and mechanical shock
- Different thin material technologies available
  - Several colors available in GaP
  - Choice of colors (560 – 626 nm): Green, Yellow, Amber, Orange, Red and Deep Red
- Three colors available in AlnGaP
  - Amber (590 nm), Red (626 nm) and Orange (605 nm)
- Two colors available in InGaN
  - Blue (472 nm), Green (526 nm)
- Several lead configuration options
  - Gull-wing, Yoke-bend and Z-bend
- Several packaging options
  - Different sizes and spatial radiation patterns available in bulk, right angle housing, and tape and reel

Applications

- Industrial and Communication
  - Front panel and symbol indicator
  - Keypad and push button backlighting
- Consumer
  - CD player, hi-fi audio and electrical appliances
  - Keypad and push button backlighting
- Automotive
  - Dashboard panel and symbol backlighting
  - Car radio indicators

Domed Subminiature Lamps

Part Number	Color	Dominant Wavelength (nm)	Viewing Angle	Lens	Intensity		Vf Typ. (V)	Test Current (mA)
					Min. (mcd)	Typ. (mcd)		
HLMP-Q106-R00xx	Deep Red	644	15°	Untinted, Non-diffused	100	400	1.9	20
HLMA-QG00-S00xx	AlInGaP Red	626	15°	Untinted, Non-diffused	160	500	1.9	20
HLMT-QG00-T00xx	AlInGaP Red	622	15°	Untinted, Non-diffused	250	1000	2	20
HLMP-6300-F00xx	GaP Red	626	90°	Tinted, Diffused	1	10	1.8	10
HLMA-QH00-S00xx	AlInGaP Red-Orange	615	15°	Untinted, Non-diffused	160	500	1.9	20
HLMT-QH00-T00xx	AlInGaP Red-Orange	615	15°	Untinted, Non-diffused	250	500	2	20
HLMA-QJ00-S00xx	AlInGaP Orange	605	15°	Untinted, Non-diffused	160	500	1.9	20
HLMA-QL00-S00xx	AlInGaP Amber	590	15°	Untinted, Non-diffused	160	500	1.9	20
HLMT-QL00-Txxxx	AlInGaP Amber	590	15°	Untinted, Non-diffused	250	–	2	20
HLMP-6400-F00xx	GaP Yellow	585	90°	Tinted, Diffused	1	9	2	10
HLMP-6500-F00xx	GaP Green	569	90°	Tinted, Diffused	1	7	2.1	10
HLMP-6505-L00xx	GaP Green	569	28°	Untinted, Non-diffused	10	40	2.1	10
HLMP-QB00-S00xx	InGaN Blue	468	20°	Untinted, Non-diffused	–	160	290	3.7
HLMP-QM00-S00xx	InGaN Green	525	20°	Untinted, Non-diffused	–	160	690	3.7
Domed Subminiature Lamps — Low Current								
HLMP-Q150-F00xx	AlGaAs Red	637	90°	Tinted, Diffused	1	1.8	1.8	1.6
HLMP-7000-D00xx	GaP Red	626	90°	Tinted, Diffused	0.4	1	1.4	1.8
HLMP-7019-D00xx	GaP Yellow	585	90°	Tinted, Diffused	0.4	0.6	1.6	2
HLMP-7040-D00xx	GaP Green	569	90°	Tinted, Diffused	0.4	0.6	1.4	2.1

Domed Subminiature Lamps — Resistor

Part Number	Color	Dominant Wavelength (nm)	Viewing Angle	Lens	Intensity		Vf Typ. (V)	Test Current (mA)
					Min. (mcd)	Typ. (mcd)		
HLMP-6600-G00xx	GaP Red	626	90°	Tinted, Diffused	1.6	5	9.6	5
HLMP-6620-F00xx	GaP Red	626	90°	Tinted, Diffused	1	2	3.5	5
HLMP-6720-F00xx	GaP Yellow	585	90°	Tinted, Diffused	0.9	2	3.5	5
HLMP-6800-G00xx	GaP Green	569	90°	Tinted, Diffused	1.6	5	9.6	5
HLMP-6820-F00xx	GaP Green	569	90°	Tinted, Diffused	1	2	3.5	5
Flat Top Subminiature Lamps								
HLMP-P105-L00xx	AlGaAs Red	637	125°	Untinted, Non-diffused	10	30	1.8	20
HLMA-PG00-N00xx	AlInGaP Red	626	125°	Untinted, Non-diffused	25	75	1.9	20
HLMT-PG00-P00xx	AlInGaP Red	622	125°	Untinted, Non-diffused	40	150	2	20
HLMP-P205-F00xx	GaP Red	626	125°	Untinted, Non-diffused	1	8	1.8	10
HLMT-PH00-P00xx	AlInGaP Red Orange	615	125°	Untinted, Non-diffused	40	120	2	20
HLMA-PJ00-N00xx	AlInGaP Orange	605	125°	Untinted, Non-diffused	25	75	2	20
HLMA-PL00-N00xx	AlInGaP Amber	590	125°	Untinted, Non-diffused	25	75	1.9	20
HLMT-PL00-P0Wxx	AlInGaP Amber	590	125°	Untinted, Non-diffused	40	150	2.4	20
HLMP-P505-G00xx	GaP Green	569	125°	Untinted, Non-diffused	1.6	6.5	2.1	10
HLMP-P605-F00xx	GaP Emerald Green	560	125°	Untinted, Non-diffused	1	1.5	2.2	10
HLMP-PB00-N00xx	InGaN Blue	468	90°	Untinted, Non-diffused	25	60	3.7	20
HLMP-PM00-N00xx	InGaN Green	528	90°	Untinted, Non-diffused	25	200	3.7	20
PCB Based Subminiature Lamps								
ASMT-BA20-AS000	AlInGaP Amber	590	15°	Untinted, Non-diffused	180	750	2.0	20
ASMT-BG20-AS000	AlInGaP Green	569	15°	Untinted, Non-diffused	180	650	2.0	20
ASMT-BR20-AS000	AlInGaP Red	626	15°	Untinted, Non-diffused	180	650	2.0	20
ASMT-BB20-NS000	InGaN Blue	468	15°	Untinted, Non-diffused	180	650	3.2	20

Note: "xx" at the end of the part number refers to the mechanical option number. Refer to table on the next page.

Subminiature Lamps are also available in the following options:

Mechanical Option Number	Description
10	Right Angle
11	Tape and Reel, 1500 lamps per reel
12	Gull Wing, Bulk Packaging
21	Yoke Lead, Tape and Reel, 1500 lamps per reel
22	Yoke Lead, Bulk Packaging
31	Z-Bend, Tape and Reel, 1500 lamps per reel
32	Z-Bend, Bulk Packaging

Intensity Bin Limits

Bin ID	Intensity (mcd)	
	Min.	Max.
A	0.10	0.20
B	0.16	0.32
C	0.25	0.50
D	0.40	0.80
E	0.63	1.25
F	1.0	2.0
G	1.6	3.2
H	2.5	5.0
J	4.0	8.0
K	6.3	12.5
L	10	20
M	16	32
N	25	50
P	40	80.0
Q	63	125
R	100	200
S	160	320
T	250	500
U	400	800
V	630	1250
W	1000	2000
X	1600	3200
Y	2500	5000

Tolerance: ±18%

Color Bin Limits

Bin ID	Intensity (mcd)	
Red Orange	Min.	Max.
1	617.5	625.0
2	621.0	628.5
3	624.5	632.0
Orange	Min.	Max.
1	596.5	600.0
2	599.0	602.5
3	601.5	604.0
4	603.8	608.2
5	606.8	611.2
6	609.8	614.2
7	612.8	617.2
8	615.8	620.2
Yellow	Min.	Max.
1	581.5	585.0
3	584.0	587.5
2	586.5	590.0
4	589.0	592.5
5	591.5	593.5
6	591.5	595.0
7	594.0	597.5
Green (except InGaN Green)	Min.	Max.
4	567	571
3	570	574
2	573	577
Emerald Green	Min.	Max.
9	552.0	556.0
8	555.0	559.0
7	558.0	562.0
6	561.0	565.0

Bin ID	Intensity (mcd)	
InGaN Green	Min.	Max.
0	Full distribution	
1	520.0	530.0
2	530.0	540.0
3	520.0	525.5
4	525.0	530.0
5	530.0	535.0
6	535.0	540.0
InGaN Blue	Min.	Max.
0	Full distribution	
1	460.0	464.0
2	464.0	468.0
3	468.0	472.0
4	472.0	476.0
5	476.0	480.0
6	480.0	484.0

Tolerance = ±1nm

Package Drawings

Surface Mount Subminiature LED Lamps Package Dimensions

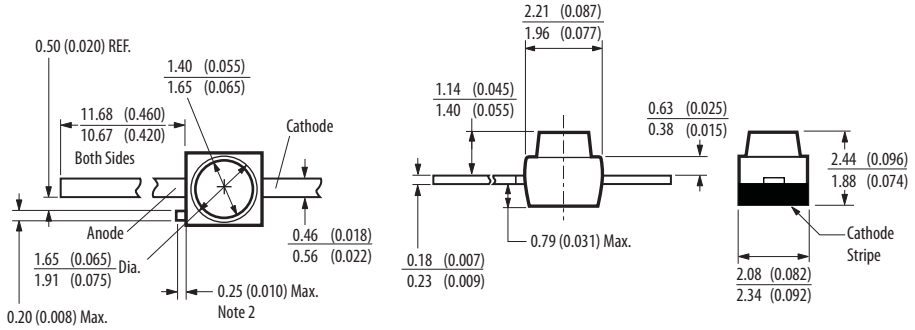

Flat Top Subminiature Lamps

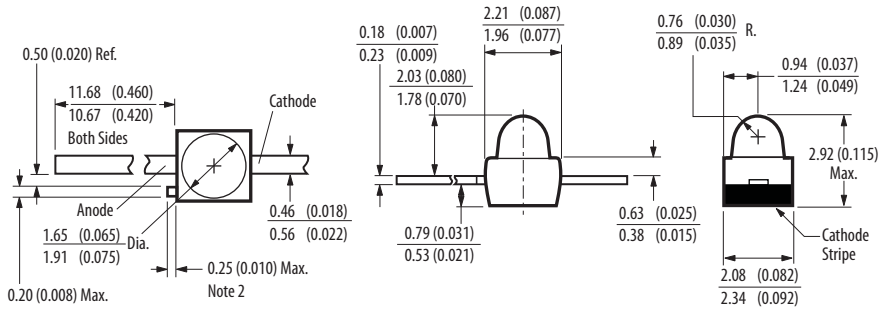

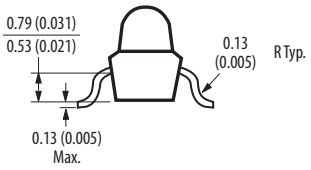

Option 011, 012

Notes:
1. All dimensions in millimeters (inches).
2. Protruding support tab is connected to Cathode Lead.

Domed Subminiature Lamps

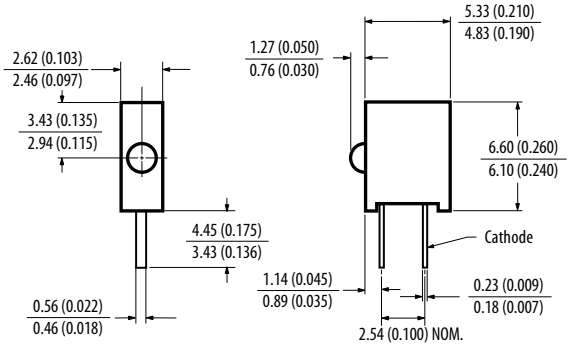

Option 010

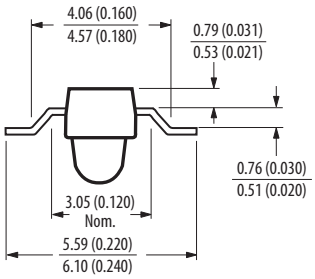

Option 031, 032

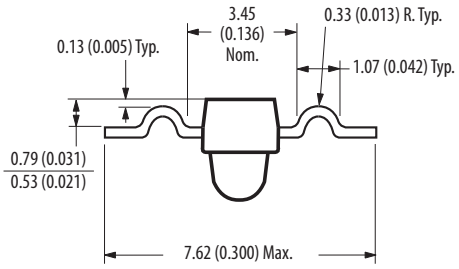

Option 021, 022

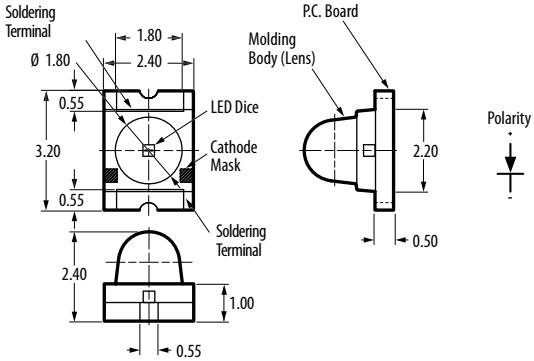

PCB Based Subminiature Lamps

Surface Mount Chip LEDs

Description

For applications that require small size, high efficiency and low power consumption, Broadcom offers an extensive range of high quality ChipLEDs to meet demands for virtually any surface mount lighting requirement.

Broadcom's ChipLEDs are available in standard and high-brightness colors, using Broadcoms' proven AlGaAs, AlInGaP and InGaN processes to give you the broadest range of colors from a single supplier.

Broadcom's ChipLEDs use the industry standard footprint, with top-mount, reverse-mount and right-angle-mount packaging options. They also have the lowest profile in the industry and are positioned to support high volume, cost-effective solutions.

ChipLED products are used in a variety of applications including LCD and push button backlighting for cellular phones, white goods and appliances, industrial measurement and control systems, and for symbol lighting and status indication in computer peripherals and consumer goods.

Low power consumption, small size and easy assembly make the ChipLED ideal for backlighting handsets as well as backlighting industrial displays.

Benefits

- Small size
  - Saves PC board space
- Wide viewing angle
  - Well-suited for backlighting applications
- Intensity and color bin uniformity
  - Can be closely mounted without any intensity variations
- Available in multiple colors
  - Amber, Red, AlGaAs Red, Green, Orange, Yellow, InGaN Blue, InGaN Green, bicolor and tricolor combinations
- Variety of packages and mounting options:
  - Top, reverse and right angle auto mountable
- Industry standard footprint
  - No change in existing board layout
- High volume, high reliability
  - Cost-effective solution

Applications

- Telecommunications
  - Keypad and LCD backlighting for mobile phones, pagers and cordless phones
- Industrial
  - Status and symbol indicator
  - Keypad and LCD backlighting
- Consumer
  - White goods and appliances
- Computer Peripherals
  - Status indicator
- Indoor Full/Mono color sign
  - Automotive interior

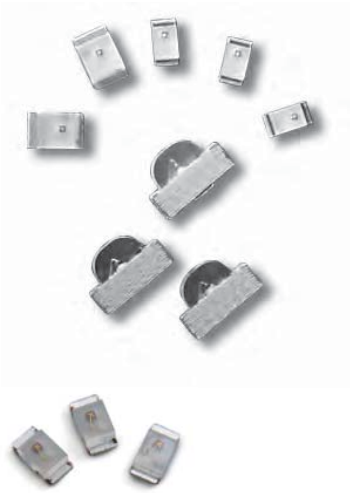

Surface Mount Chip LEDs

Part Number	Color	Dominant Wavelength (nm)	Viewing Angle	Lens	Intensity		Vf Typ. (V)	Test Current (mA)
					Min. (mcd)	Typ. (mcd)		
Top Mount 1206 Industrial Footprint with 1.1 mm Height (C150)*								
3 3.2 x 1.6 x 1.1 mm (L x W x H).2 x 1.6 x 1.1 mm (L x W x H)								
HSMH-C150	AS AlGaAs Red	639	170°	Diffused	7.2	17	1.8	20
HSMD-C150	GaP Orange	604	170°	Diffused	2.8	8	2.2	20
HSMG-C150	GaP Green	572	170°	Diffused	4.5	15	2.2	20
HSMS-C150	GaP Red	626	170°	Diffused	2.8	10	2.1	20
HSMY-C150	GaP Yellow	586	170°	Diffused	2.8	8	2.1	20
HSMQ-C150	InGaN Green	527	140°	Diffused	45	145	3.4	20
HSMR-C150	InGaN Blue	473	140°	Diffused	18	55	3.4	20
HSME-C150	AS AlInGaP Green	572	170°	Diffused	18	50	2.1	20
Top Mount 1206 Industrial Footprint with 1.10mm Height (C350)								
3.2 x 1.6 x 1.1 mm (L x W x H)								
HSMA-C350	AlInGaP Amber	589	70°	Diffused	180	285	2	20
HSMC-C350	AlInGaP Red	630	70°	Diffused	112.5	180	2	20
HSME-C350	AlInGaP Yellow Green	570	70°	Diffused	71.5	112.5	2	20
HSML-C350	AlInGaP Orange	603	70°	Diffused	112.5	180	2	20
HSMQ-C350	InGaN Green	528	70°	Diffused	450	715	3.4	20
Top Mount 1206 Industrial Footprint with 1.85mm Height (C380)								
3.2 x 1.6 x 1.85 mm (L x W x H)								
HSMA-C380	AlInGaP Amber	589	15°	Diffused	715	1125	2	20
HSMC-C380	AlInGaP Red	630	15°	Diffused	450	715	2	20
HSME-C380	AlInGaP Yellow Green	570	15°	Diffused	285	450	2	20
HSML-C380	AlInGaP Orange	603	15°	Diffused	450	715	2	20
HSMQ-C380	InGaN Green	528	15°	Diffused	1800	2850	3.4	20
Top Mount 0805 Industrial Footprint with 0.8 mm Height (C170)**								
2.0 x 1.25 x 0.8 mm (L x W x H)								
HSMH-C170	AS AlGaAs Red	639	170°	Diffused	7.2	17	1.8	20
HSMD-C170	GaP Orange	604	170°	Diffused	2.8	8	2.2	20
HSMG-C170	GaP Green	572	170°	Diffused	4.5	15	2.2	20
HSMS-C170	GaP Red	626	170°	Diffused	2.8	10	2.1	20
HSMY-C170	GaP Yellow	586	170°	Diffused	2.8	8	2.1	20
HSMA-C170	AS AlInGaP Amber	592	170°	Diffused	28.5	90	1.9	20
HSMC-C170	AS AlInGaP Red	626	170°	Diffused	28.5	90	1.9	20
HSML-C170	AS AlInGaP Orange	605	170°	Diffused	28.5	90	1.9	20
HSMZ-C170	AS AlInGaP Red	631	170°	Diffused	45	165	2.2	20
HSMM-C170	InGaN Green	525	170°	Diffused	45	120	3.3	20
HSMN-C170	InGaN Blue	470	170°	Diffused	11.2	35	3.3	20
HSMQ-C170	InGaN Green	527	140°	Diffused	45	145	3.4	20
HSMR-C170	InGaN Blue	473	140°	Diffused	18	55	3.4	20
HSME-C170	AS AlInGaP Green	572	170°	Diffused	18	50	2.1	20
HSMA-C170-T0000	AlInGaP Amber	592	155°	Diffused	285	426	2	20
HSMC-C170-T0000	AlInGaP Red	626	140°	Diffused	285	450	2	20
HSML-C170-T0000	AlInGaP Orange	605	140°	Diffused	285	450	2	20
HSMQ-C170-T0000	InGaN Green	527	140°	Diffused	285	580	3.4	20
HSMR-C170-R0000	InGaN Blue	466	155°	Diffused	146.25	170	3.4	20

***Quantity:** 3,000 per 7 inch reel
****Quantity:** 4,000 per 7 inch reel

Surface Mount Chip LEDs

Part Number	Color	Dominant Wavelength (nm)	Viewing Angle	Lens	Intensity		Vf Typ. (V)	Test Current (mA)
					Min. (mcd)	Typ. (mcd)		
Top Mount 0603 Industrial Footprint with 0.8 mm Height (C190)**								
1.6 x 0.8 x 0.8 mm (L x W x H)								
HSMH-C190	AS AlGaAs Red	639	170°	Diffused	7.2	17	1.8	20
HSMD-C190	GaP Orange	604	170°	Diffused	2.8	8	2.2	20
HSMG-C190	GaP Green	572	170°	Diffused	4.5	5	2.2	20
HSMS-C190	GaP Red	626	170°	Diffused	2.8	10	2.1	20
HSMY-C190	GaP Yellow	586	170°	Diffused	2.8	8	2.1	20
HSMA-C190	AS AlInGaP Amber	592	170°	Diffused	28.5	90	1.9	20
HSMC-C190	AS AlInGaP Red	626	170°	Diffused	28.5	90	1.9	20
HSML-C190	AS AlInGaP Orange	605	170°	Diffused	28.5	90	1.9	20
HSMZ-C190	AS AlInGaP Red	631	170°	Diffused	45	165	2.2	20
HSMM-C190	InGaN Green	525	170°	Diffused	45	120	3.3	20
HSMN-C190	InGaN Blue	470	170°	Diffused	11.2	35	3.3	20
HSMQ-C190	InGaN Green	527	140°	Diffused	45	145	3.4	20
HSMR-C190	InGaN Blue	473	140°	Diffused	18	55	3.4	20
HSME-C190	AS AlInGaP Green	572	170°	Diffused	18	50	2.1	20
Top Mount 0603 Industrial Footprint with 0.6 mm Height (C191)**								
1.6 x 0.8 x 0.6 mm (L x W x H)								
HSMH-C191	AS AlGaAs Red	639	170°	Diffused	7.2	17	1.8	20
HSMD-C191	GaP Orange	604	170°	Diffused	2.8	8	2.2	20
HSMG-C191	GaP Green	572	170°	Diffused	4.5	5	2.2	20
HSMS-C191	GaP Red	626	170°	Diffused	2.8	10	2.1	20
HSMY-C191	GaP Yellow	586	170°	Diffused	2.8	8	2.1	20
HSMA-C191	AS AlInGaP Amber	592	170°	Diffused	28.5	90	1.9	20i
HSMC-C191	AS AlInGaP Red	626	170°	Diffused	28.5	90	1.9	20
HSML-C191	AS AlInGaP Orange	605	170°	Diffused	28.5	90	1.9	20
HSMN-C191	InGaN Blue	470	170°	Diffused	11.2	35	3.3	20
HSMQ-C191	InGaN Green	527	140°	Diffused	45	145	3.4	20
HSMR-C191	InGaN Blue	473	140°	Diffused	18	55	3.4	20
HSME-C191	AS AlInGaP Green	572	170°	Diffused	18	50	2.1	20
HSMK-C191	InGaN Cyan	496	170°	Diffused	71.5	285	3.4	20
HSMA-C191-T0000	AlInGaP Amber	592	155°	Diffused	285	385	2	20
HSMC-C191-T0000	AlInGaP Red	626	125°	Diffused	285	450	2	20
HSML-C191-T0000	AlInGaP Orange	605	125°	Diffused	285	450	2	20
HSMQ-C191-T0000	InGaN Green	527	140°	Diffused	285	580	3.4	20
HSMR-C191-S0000	InGaN Blue	466	145°	Diffused	180	208	3.4	20

****Quantity:** 4,000 per 7 inch reel

Surface Mount Chip LEDs

Part Number	Color	Dominant Wavelength (nm)	Viewing Angle	Lens	Intensity		Vf Typ. (V)	Test Current (mA)
					Min. (mcd)	Typ. (mcd)		
Top Mount 0805 Industrial Footprint with 0.4 mm Height (C177)**								
2.00 x 1.25 x 0.4 mm (L x W x H)								
HSMD-C177	GaP Orange	604	130°	Diffused	2.8	8	2.2	20
HSMG-C177	GaP Green	572	130°	Diffused	4.5	5	2.2	20
HSMS-C177	GaP Red	626	130°	Diffused	2.8	10	2.1	20
HSMA-C177	AS AlInGaP Amber	592	130°	Diffused	28.5	90	1.9	20
HSMC-C177	AS AlInGaP Red	626	130°	Diffused	28.5	90	1.9	20
HSML-C177	AS AlInGaP Orange	605	130°	Diffused	28.5	90	1.9	20
HSME-C177	AS AlInGaP Green	572	130°	Diffused	18	50	2.1	20
Top Mount 0603 Industrial Footprint with 0.4 mm Height (C197)**								
1.6 x 0.8 x 0.4 mm (L x W x H)								
HSMD-C197	GaP Orange	604	130°	Diffused	2.8	8	2.2	20
HSMG-C197	GaP Green	572	130°	Diffused	4.5	5	2.2	20
HSMS-C197	GaP Red	626	130°	Diffused	2.8	10	2.1	20
HSMY-C197	GaP Yellow	586	130°	Diffused	2.8	8	2.1	20
HSMA-C197	AS AlInGaP Amber	592	130°	Diffused	28.5	90	1.9	20
HSMC-C197	AS AlInGaP Red	626	130°	Diffused	28.5	90	1.9	20
HSML-C197	AS AlInGaP Orange	605	130°	Diffused	28.5	90	1.9	20
HSME-C197	AS AlInGaP Green	572	130°	Diffused	18	50	2.1	20
Top Mount 0402 Industrial Footprint with 0.4 mm Height (C280)**								
1.0 x 0.5 x 0.4 mm (L x W x H)								
HSMA-C280	AS AlInGaP Amber	592	130°	Diffused	28.5	90	1.9	20
HSMC-C280	AS AlInGaP Red	626	130°	Diffused	28.5	90	1.9	20
HSMG-C280	GaP Green	572	130°	Diffused	4.5	15	2.2	20
HSMS-C280	GaP Red	626	130°	Diffused	2.8	10	2.1	20
HSMY-C280	GaP Yellow	586	130°	Diffused	2.8	8	2.1	20
HSME-C280	AlInGaP green	572	130°	Diffused	28.5	45	1.9	20
HSMQ-C280	InGaN green	522	130°	Diffused	112.5	222.8	3.4	20
HSMR-C280	InGaN blue	465	130°	Diffused	28.5	80	3.2	20
Top Mount 0402 Industrial Footprint with 0.25mmHheight (C290)**								
1.0 x 0.5 x 0.25 mm (L x W x H)								
HSMA-C290	AlInGaP Amber	589	135°	Diffused	45	79	2	20
HSMC-C290	AlInGaP Red	624	135°	Diffused	28.5	97	2	20
HSME-C290	AlInGaP Yellow Green	572	135°	Diffused	28.5	63	2	20
HSML-C290	AlInGaP Orange	605	135°	Diffused	71.5	89	2	20

****Quantity:** 4,000 per 7 inch reel

Surface Mount Chip LEDs

Part Number	Color	Dominant Wavelength (nm)	Viewing Angle	Lens	Intensity		Vf Typ. (V)	Test Current (mA)
					Min. (mcd)	Typ. (mcd)		
Top Mount 0603 Industrial Footprint with 0.35 mm Height (C130)**								
1.6 x 0.8 x 0.35 mm (L x W x H)								
HSMA-C130	AlInGaP Amber	592	110°	Diffused	28.5	87	2	20
HSMC-C130	AlInGaP Red	626	110°	Diffused	28.5	131	1.9	20
HSME-C130	AlInGaP Green	572	110°	Diffused	18	54	1.9	20
HSML-C130	AlInGaP Orange	605	110°	Diffused	28.5	139	1.9	20
HSMR-C130	InGaN Blue	473	145°	Diffused	18	55	3.4	20
HSMQ-C130	InGaN green	527	120	Diffused	285	350	3.4	20
Right Angle 1 mm Height (C110)*								
3.2 x 1.5 x 1.0 mm (L x W x H)								
HSMH-C110	AS AlGaAs Red	639	130°	Non-diffused	7.2	17	1.8	20
HSMD-C110	GaP Orange	604	130°	Non-diffused	2.8	8	2.2	20
HSMG-C110	GaP Green	572	130°	Non-diffused	4.5	15	2.2	20
HSMS-C110	GaP Red	626	130°	Non-diffused	2.8	10	2.1	20
HSMY-C110	GaP Yellow	586	130°	Non-diffused	2.8	8	2.1	20
HSMA-C110	AS AlInGaP Amber	592	130°	Non-diffused	28.5	95	1.9	20
HSMC-C110	AS AlInGaP Red	626	130°	Non-diffused	28.5	95	1.9	20
HSML-C110	AS AlInGaP Orange	605	130°	Non-diffused	28.5	95	1.9	20
HSMZ-C110	AS AlInGaP Red	631	130°	Non-diffused	45	170	2.2	20
HSMM-C110	InGaN Green	525	130°	Non-diffused	45	126	3.3	20
HSMN-C110	InGaN Blue	470	130°	Non-diffused	11.2	39	3.3	20
HSMQ-C110	InGaN Green	527	130°	Non-diffused	45	150	3.4	20
HSMR-C110	InGaN Blue	473	130°	Non-diffused	18	60	3.4	20
HSME-C110	AS AlInGaP Green	572	130°	Non-diffused	18	52	2.1	20
Right Angle 1.6mm Height (C400)*								
3.2 x 2.55 x 1.6 mm (Lx W x H)								
HSMA-C400	AlInGaP Amber	588	90°	Diffused	28.5	45	2	20
HSMC-C400	AlInGaP Red	623	90°	Diffused	28.5	45	2	20
HSME-C400	AlInGaP Yellow Green	573	90°	Diffused	28.5	45	2	20
HSML-C400	AlInGaP Orange	606	90°	Diffused	28.5	45	2	20
HSMQ-C400	InGaN Green	522	130°	Diffused	285	450	3.4	20
Top Mount 0603 Industrial Footprint with 0.2mm height (CB20)*								
1.6 x 0.8 x 0.2 mm (L x W x H)								
ASMT-CB20	InGaN Blue	473	120°	Diffused	11.2	25	2.85	5

***Quantity:** 3,000 per 7 inch reel
****Quantity:** 4,000 per 7 inch reel

Surface Mount Chip LEDs

Part Number	Color	Dominant Wavelength (nm)	Viewing Angle	Lens	Intensity		Vf Typ. (V)	Test Current (mA)
					Min. (mcd)	Typ. (mcd)		
Right Angle 0.6 mm Height (C120)**								
1.6 x 1.0 x 0.6 mm (L x W x H)								
HSMH-C120	AS AlGaAs	639	155°	Non-diffused	7.2	17	1.8	20
HSMD-C120	GaP Orange	604	155°	Non-diffused	2.8	8	2.2	20
HSMG-C120	GaP Green	572	155°	Non-diffused	4.5	15	2.2	20
HSMA-C120	AS AlInGaP Amber	592	155°	Non-diffused	28.5	90	1.9	20
HSMC-C120	AS AlInGaP Red	626	155°	Non-diffused	28.5	90	1.9	20
HSML-C120	AS AlInGaP Orange	605	155°	Non-diffused	28.5	90	1.9	20
HSMM-C120	InGaN Green	525	155°	Non-diffused	45	120	3.4	20
HSMN-C120	InGaN Blue	470	155°	Non-diffused	11.2	30	3.4	20
HSMQ-C120	InGaN Green	527	155°	Non-diffused	45	145	3.4	20
HSMR-C120	InGaN Blue	473	155°	Non-diffused	18	55	3.4	20
HSME-C120	AS AlInGaP Green	572	155°	Non-diffused	18	52	2.1	20
Right Angle 0.4 mm Height (Cx00)**								
1.6 x 1.0 x 0.4 mm (L x W x H)								
ASMT-CA00	AlInGaP Amber	592	150°	Non-diffused	28.5	90	1.9	20
ASMT-CR00	AlInGaP Red	626	150°	Non-diffused	28.5	90	1.9	20
ASMT-CG00	InGaN Green	527	150°	Non-diffused	45	225	3.1	20
ASMT-CB00	InGaN Blue	473	150°	Non-diffused	7.2	18	2.85	5
ASMT-CW00	InGaN White	Chromaticity Coordinates Bin A1-D2	170°	Diffused	18	35	2.85	5
Right Angle 0.3mm Height (C230)**								
1.0 x 0.55 x 0.3 mm (L x W x H)								
HSMA-C230	AlInGaP Amber	589	140°	Diffused	28.5	70	2	20
HSMC-C230	AlInGaP Red	622	140°	Diffused	28.5	120	2	20
HSME-C230	AlInGaP Yellow Green	572	140°	Diffused	28.5	70	2	20
HSML-C230	AlInGaP Orange	605	140°	Diffused	28.5	120	2	20
HSMQ-C230	InGaN Green	523	140°	Diffused	112.5	210	3.4	20
HSMR-C230	InGaN Blue	468	175°	Diffused	18	28.5	2.85	5
Reverse Mount (C265)*								
3.4 x 1.25 x 1.1 mm (L x W x H)								
HSMA-C265	AS AlInGaP Amber	592	150°	Non-diffused	28.5	75	1.9	20
HSMC-C265	AS AlInGaP Red	626	150°	Non-diffused	28.5	75	1.9	20
HSME-C265	AS AlInGaP Green	572	170°	Non-diffused	18	50	2.1	20
HSML-C265	AS AlInGaP Orange	605	150°	Non-diffused	28.5	75	1.9	20
HSMG-C265	GaP Green	572	170°	Non-diffused	4.5	15	2.2	20
HSMH-C265	AS AlGaAs Red	639	170°	Non-diffused	7.2	17	1.8	20
HSMQ-C265	InGaN Green	527	150°	Non-diffused	45	140	3.4	20
HSMR-C265	InGaN Blue	473	150	Non-diffused	18	45	3.4	20

***Quantity:** 3,000 per 7 inch reel
****Quantity:** 4,000 per 7 inch reel

Surface Mount Chip LEDs

Part Number	Color	Dominant Wavelength (nm)	Viewing Angle	Lens	Intensity		Vf Typ. (V)	Test Current (mA)
					Min. (mcd)	Typ. (mcd)		
Bicolor Top Mount 1210 Industrial Footprint (C15x)*								
3.2 x 2.7 x 1.1 mm (L x W x H)								
HSMF-C153	GaP Yellow	586	170°	Diffused	2.8	8	2.1	20
	GaP Red	626	170°	Diffused	2.8	10	2.1	20
HSMF-C155	GaP Green	572	170°	Diffused	4.5	15	2.2	20
	GaP Red	626	170°	Diffused	2.8	10	2.1	20
HSMF-C156	GaP Green	572	170°	Diffused	4.5	15	2.2	20
	GaP Yellow	586	170°	Diffused	2.8	8	2.1	20
HSMF-C157	GaP Green	572	170°	Diffused	4.5	15	2.2	20
	GaP Orange	604	170°	Diffused	2.8	8	2.2	20
HSMF-C158	AlInGaP Green	572	170°	Diffused	28.5	45	2.1	20
	AlInGaP Amber	592	170°	Diffused	28.5	55	1.9	20
HSMF-C150	AlInGaP Red	632	170°	Diffused	18	79	1.9	20
	AlInGaP Green	572	170°	Diffused	18	45	2.1	20
HSMF-C15A	AlInGaP Red	632	170°	Diffused	18	79	1.9	20
	AlInGaP Amber	592	170°	Diffused	28.5	55	1.9	20
Bicolor Top Mount 0605 Industrial Footprint (C17x)*								
1.6 x 1.25 x 0.4 mm (L x W x H)								
HSMF-C171	AlInGaP Orange	605	140°	Diffused	28.5	45	2	10
	InGaN Blue	467	150°	Diffused	18	28.5	3.4	10
HSMF-C172	AlInGaP Orange	605	140°	Diffused	28.5	45	2	20
	AlInGaP Yellow Green	570	140°	Diffused	28.5	45	2	20
HSMF-C173	AlInGaP Red	624	140°	Diffused	28.5	45	2	20
	InGaN Green	525	150°	Diffused	71.5	112.5	3.4	20
HSMF-C174	AlInGaP Red	624	140°	Diffused	28.5	45	2	20
	AlInGaP Yellow Green	570	140°	Diffused	28.5	45	2	20
HSMF-C175	AlInGaP Amber	589	140°	Diffused	28.5	45	2	20
	AlInGaP Yellow Green	570	140°	Diffused	28.5	45	2	20
HSMF-C176	InGaN Blue	467	150°	Diffused	18	28.5	3.4	10
	InGaN Green	525	150°	Diffused	71.5	112.5	3.4	10
HSMF-C177	AlInGaP Orange	605	140°	Diffused	28.5	45	2	10
	InGaN Green	525	150°	Diffused	180	285	3.4	10

***Quantity:** 3,000 per 7 inch reel

Surface Mount Chip LEDs

Part Number	Color	Dominant Wavelength nm)	Viewing Angle	Lens	Intensity		Vf Typ. (V)	Test Current (mA)
					Min. (mcd)	Typ. (mcd)		
Bicolor Top Mount 0603 Industrial Footprint (C16x)*								
1.6 x 0.8 x 0.5 mm (L x W x H)								
HSMF-C162	AlInGaP Amber	592	120°	Diffused	28.5	90	1.9	20
	AlInGaP Red	626	120°	Diffused	28.5	90	1.9	20
HSMF-C163	InGaN Green	525	120°	Diffused	18	45	3.4	10
	AlInGaP Red	626	120°	Diffused	11.2	35	1.8	10
HSMF-C164	InGaN Blue	470	120°	Diffused	2.8	10	3.4	10
	AlInGaP Red	626	120°	Diffused	11.2	35	1.8	10
HSMF-C165	GaP Green	572	120°	Diffused	4.5	15	2.2	20
	GaP Red	626	120°	Diffused	2.8	10	2.1	20
HSMF-C166	GaP Green	572	120°	Diffused	4.5	15	2.2	20
	GaP Yellow	586	120°	Diffused	2.8	8	2.1	20
HSMF-C167	GaP Green	572	120°	Diffused	4.5	15	2.2	20
	GaP Orange	604	120°	Diffused	2.8	8	2.2	20
HSMF-C169	InGaN Blue	470	120°	Diffused	2.8	10	3.4	10
	AlInGaP Amber	592	120°	Diffused	11.2	35	1.8	10
HSMF-C16M	AlInGaP Red	632	120°	Diffused	45	104.4	1.9	20
	AlInGaP Green	570	120°	Diffused	45	55.4	2.1	20
Tricolor Top Mount 1210 Industrial Footprint (C118)*								
3.2 x 2.7 x 1.1 mm (L x W x H)								
HSMF-C118	AlInGaP Red	623	140°	Diffused	18	28.5	2	10
	InGaN Green	529	140°	Diffused	71.5	112.5	3.4	10
	InGaN Blue	468	140°	Diffused	18	28.5	3.4	10
Tricolor Top Mount 0805 Industrial Footprint (C129)*								
2.0 x 1.3 x 0.5 mm (L x W x H)								
HSMF-C129	AlInGaP Red	623	140°	Diffused	18	28.5	2	10
	InGaN Green	529	140°	Diffused	71.5	112.5	3.4	10
	InGaN Blue	468	140°	Diffused	18	28.5	3.4	10
Tricolor Right Angle with 1.0 mm Height (C11x)*								
2.5 x 1.0 x 1.0 mm (L x W x H)								
HSMF-C113	AlInGaP Red	626	120°	Diffused	28.5	80	1.9	20
	AlInGaP Green	572	125°	Diffused	18	50	2	20
	InGan Blue	470	125°	Diffused	28.5	60	3.4	20
HSMF-C115	AlInGaP Red	626	120°	Diffused	28.5	80	1.9	20
	InGan Green	525	125°	Diffused	71.5	170	3.4	20
	InGan Blue	470	125°	Diffused	28.5	60	3.4	20

***Quantity:** 3,000 per 7 inch reel

Surface Mount Chip LEDs

Part Number	Color	Dominant Wavelength (nm)	Viewing Angle	Lens	Intensity		Vf Typ. (V)	Test Current (mA)
					Min. (mcd)	Typ. (mcd)		
Tricolor Top Mount with 0.35mm Height (C114)**								
1.6 x 0.8 x 0.45 mm (L x W x H)								
HSMF-C114	AlInGaP Red	626	140°	Diffused	28.5	85	1.9	20
	InGan Green	525	145°	Diffused	45	180	3.4	20
	InGan Blue	470	145°	Diffused	28.5	70	3.4	20
Tricolor Top Mount 0606 Industrial Footprint (C125)								
1.6 x 1.6 x 0.4 mm (L x W x H)								
HSMF-C125	AlInGaP Red	623	150°	Diffused	45	71.5	1.9	10
	InGaN Green	522	150°	Diffused	112.5	180	2.93	10
	InGaN Blue	467	150°	Diffused	28.5	45	2.95	10
Bicolor Right Angle 0.1 mm height (C14x)								
3.0 x 2.0 x 1.0 (L x W x H)								
HSMF-C142	AlInGaP Deep Red	632	120°	Non diffused	18	79	1.9	20
	AlInGaP Green	570	120°	Non diffused	18	33	2.1	20
HSMF-C143	AlInGaP Amber	589	120°	Non diffused	28.5	103	1.9	20
	AlInGaP Green	570	120°	Non diffused	18	33	2.1	20
HSMF-C144	AlInGaP Red	632	120°	Non diffused	18	79	1.9	20
	AlInGaP Green	570	120°	Non diffused	18	33	2.1	20
HSMF-C145	AlInGaP Red	632	120°	Non diffused	18	79	1.9	20
	AlInGaP Green	523	120°	Non diffused	45	223	3.4	20
HSMF-C146	AlInGaP Red	632	120°	Non diffused	18	79	1.9	20
	InGaN Blue	459	120°	Non diffused	28.5	75	3.2	20
Leadframe-based (ASMT-Rx45)								
1.6 x 0.8 x 0.45 mm (L x W x H)								
ASMT-RR45	AlInGaP Red	622	145°	Diffused	50	120	2	20
ASMT-RF45	AlInGaP Yellow Green	573	145°	Diffused	30	60	2	20
ASMT-RA45	AlInGaP Amber	591	145°	Diffused	40	90	2	20

Quantity: 4,000 per 7 inch reel

Color Bin Limits

Package	Color Bin	Wavelength (nm)	
		Min.	Max.
GaN/InGaN Blue	A	460.0	465.0
	B	465.0	470.0
	C	470.0	475.0
	D	475.0	480.0
InGaN Green	A	515.0	520.0
	B	520.0	525.0
	C	525.0	530.0
	D	530.0	535.0
Orange	A	597.0	600.0
	B	600.0	603.0
	C	603.0	606.0
	D	606.0	609.0
	E	609.0	612.0
	F	612.0	615.0
Red	Full Distribution		
AlGaAs Red	Full Distribution		

Tolerance: ± 1.0 nm

Package	Color Bin	Wavelength (nm)	
		Min.	Max.
Green	A	561.5	564.5
	B	564.5	567.5
	C	567.5	570.5
	D	570.5	573.5
	E	573.5	576.5
Yellow	A	582.0	584.5
	B	584.5	587.0
	C	587.0	589.5
	D	589.5	592.0
	E	592.0	594.5
	F	594.5	597.0
Amber	A	582.0	584.5
	B	584.5	587.0
	C	587.0	589.5
	D	589.5	592.0
	E	592.0	594.5
	F	594.5	597.0

Tolerance: ± 1.0 nm

Surface Mount ChipLEDs

Standard Intensity Bin Limits

Bin ID	Intensity (mcd)	
	Min.	Max.
A	0.11	0.18
B	0.18	0.29
C	0.29	0.45
D	0.45	0.72
E	0.72	1.10
F	1.10	1.80
G	1.80	2.80
H	2.80	4.50
J	4.50	7.20
K	7.20	11.20
L	11.20	18.00
M	18.00	28.50
N	28.50	45.00
P	45.00	71.50
Q	71.50	112.50
R	112.50	180.00
S	180.00	285.00
T	285.00	450.00
U	450.00	715.00
V	715.00	1125.00
W	1125.00	1800.00
X	1800.00	2850.00
Y	2850.00	4500.00

Tolerance: ±15%

Package Drawings

HSMx-C177

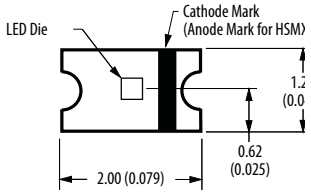

HSMx-C120/ASMT-Cx00

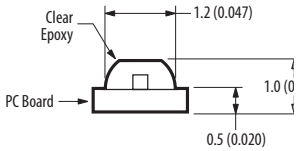

HSMx-C150

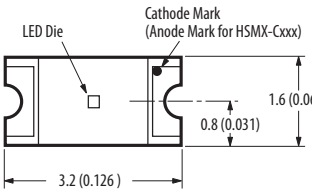

HSMx-C190/C191/C130

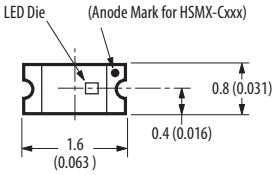

HSMx-C265

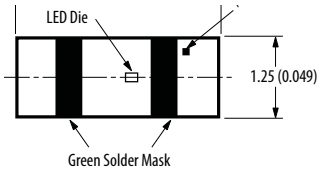

HSMx-C280

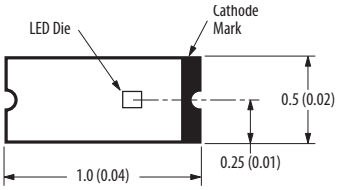

HSMx-C170

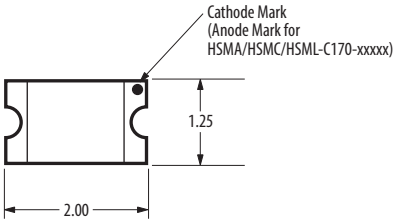

HSMx-C191

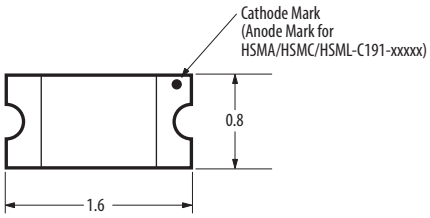

HSMx-C290

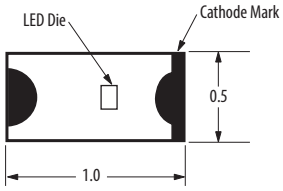

Notes:
1. All dimensions in millimeters (inches).
2. Tolerance is ±0.1mm (±0.004 in.) unless otherwise specified.

HSMF-C15x

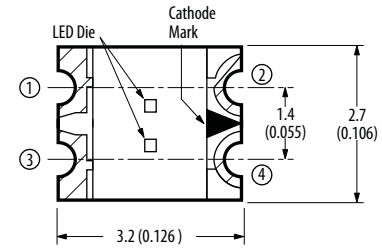

HSMF-C16x

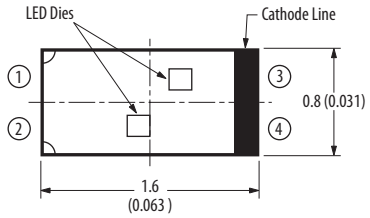

HSMF-C118

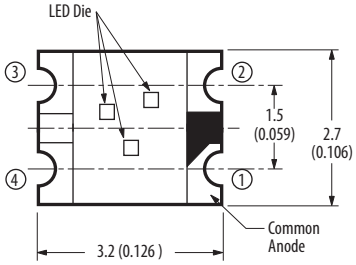

HSMF-C114

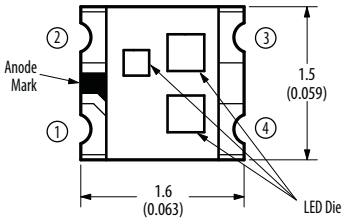

HSMF-C113/C115

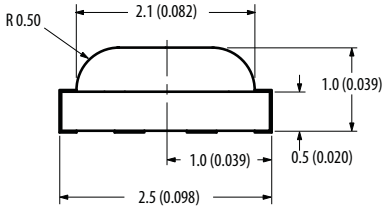

HSMx-C110

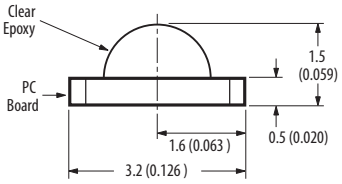

HSMx-C350

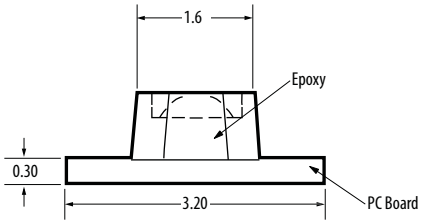

HSMx-C380

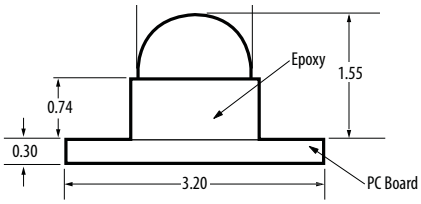

HSMx-C400

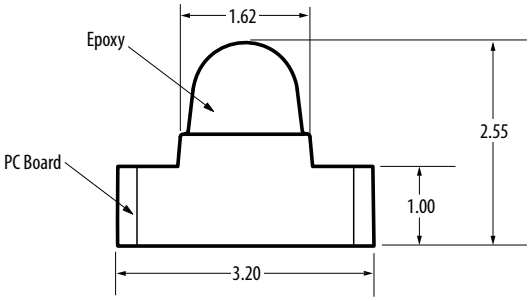

Notes:
1. All dimensions in millimeters (inches).
2. Tolerance is ±0.1mm (±0.004 in.) unless otherwise specified.

Package Drawings

HSMx-C230

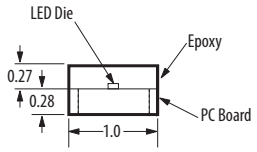

HSMF-C17x

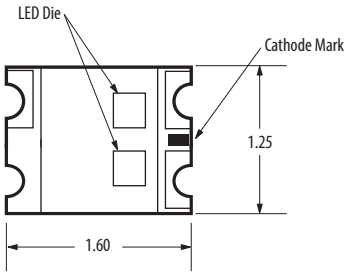

HSMF-C129

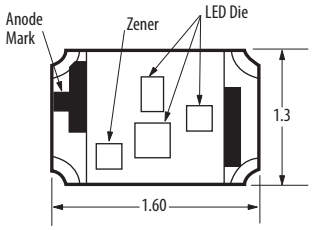

ASMT-RX45

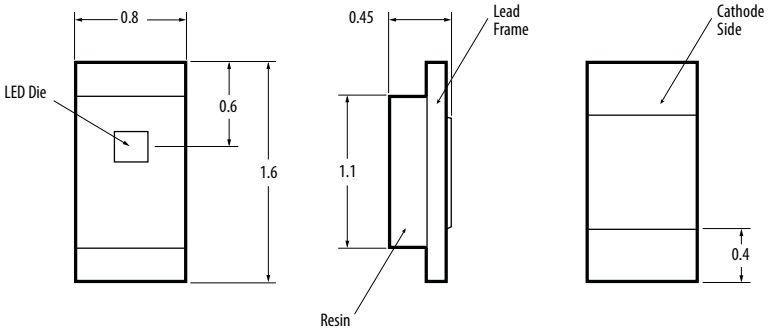

HSMF-C125

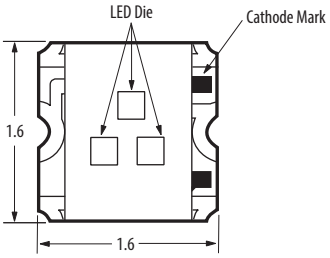

HSMx-C197

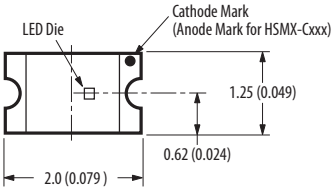

HSMx-C170

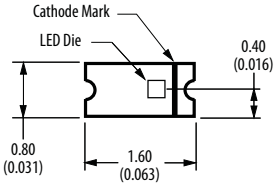

Notes:
1. All dimensions in millimeters (inches).
2. Tolerance is ±0.1mm (±0.004 in.) unless otherwise specified.

Auto Focus Auxiliary Flash LED

Description

Broadcom offers Auto Focus Auxiliary Flash LEDs in the standard, low profile and miniature package. These are surface mount dome lamps that use an untinted, non-diffused lens to provide a high luminous intensity within a narrow radiation pattern.

These narrow angle SMT lamp packages are designed for applications which require long distance illumination and narrow beam pattern such as auxiliary flash for auto-focus function in digital still cameras. The miniature and low profile package are also suitable for applications that have constrains in design area. These devices are compatible with Pb-free reflow soldering process.

The standard Auto Focus Auxiliary Flash LEDs are available in 530nm Green and 605nm Orange. The miniature package is available in 605nm Orange.

Benefits

- Smooth, consistent narrow radiation pattern
- Viewing angle optimized for auto focus function
- 3m illumination distance
- Miniature package: 18° view angle
- Standard package: Small footprint with 4.8L x 4.8W x 5.33H mm
- Low profile package: 12° viewing angle for Orange; 14° viewing angle for Green low profile package: 3.6L x 3.2W x 3.4H mm package dimension
- Good intensity output
- Compatible with 2x solder reflow
- Clear, non-diffused epoxy
- Allows easy assembly and PCB space saving.
- Compatible with reflow soldering
- IEC/EN 60825-1 eye safety class 1
- RoHS compliant

Application

- Digital still camera

Standard Auto Focus Auxiliary Flash LED

Part Number	Color	Dominant Wavelength (nm)	Viewing Angle	Lens	Intensity			Vf Typ. (V)	Test Current (mA)	Device Height
					Min. (cd)	Typ. (cd)	Max. I_v (cd)			
ASMT-FJ60-AFJ00	AlInGaP Orange	605	10°	Clear	–	29	–	2.1	20	4.35mm
ASMT-FJ10-AHJ00	AlInGaP Orange	605	8°	Clear	9	22	–	2	20	5.33mm
ASMT-FG10-NFJ00	InGaN Green	530	6°	Clear	18	40	56	3.3	20	5.33mm
ASMT-FJ70-AFJ00	AlInGaP Orange	605	12º	Clear	15	25	56	2.1	20	3.40mm
ASMT-FG70-NFJ00	InGaN Green	525	14º	Clear	15	22	56	3.3	20	3.40mm

Miniature Auto Focus Auxiliary Flash LED

Part Number	Color	Dominant Wavelength (nm)	Viewing Angle	Lens	Intensity			Vf Typ. (V)	Test Current (mA)
					Min. (cd)	Typ. (cd)	Max. I_v (cd)		
ASMT-FJ30-AB000	AlInGaP Orange	605	12°	Clear	5.5	-	–	2	20

Side Firing Auto Focus Auxiliary Flash LED

Part Number	Color	Dominant Wavelength (nm)	Viewing Angle	Lens	Intensity			Vf Typ. (V)	Test Current (mA)
					Min. (cd)	Typ. (cd)	Max. I_v (cd)		
ASMT-FJ80-AFJ00	AlInGaP Orange	605	10°	Clear	15	25	–	2	20

Iv Bin Category

Bin ID	Intensity (cd)	
	Min.	Max.
B	5.5	7.0
C	7.0	9.0
D	9.0	11.5
E	11.5	15.0
F	15.0	19.5
F+ **	18.0	19.5
G	19.5	25.5
H	25.5	33.0
I	33.0	43.0
J	43.0	56.0

Iv Tolerance = ±15%
** For ASMT-FG10-NFJ00 only

Color Bin Category

Bin ID	Wavelength (nm)	
	Min.	Max.
Orange (ASMT-FJ10-xxxxx)		
A	600	604
B	604	608
C	608	612
Orange (ASMT-FJ30-xxxxx)		
1	597	600
2	600	603
3	603	606
4v	606	609
5	609	612
Green		
A	515	520
B	520	525
C	525	530
D	530	535

Tolerance = ±1nm

Package Drawings

Standard Auto Focus Auxiliary Flash LED with 4.35mm Height

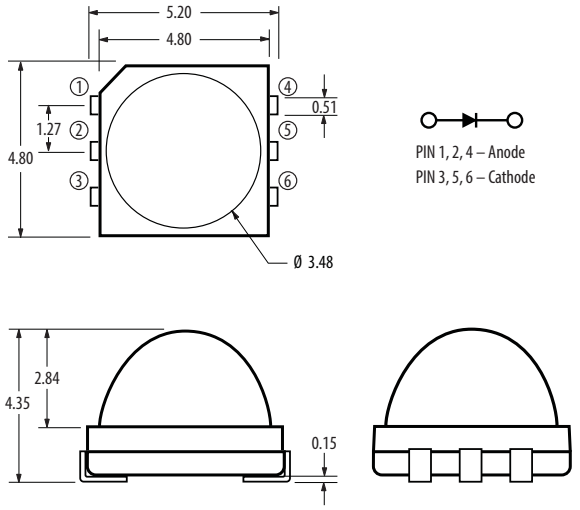

Miniature Auto Focus Auxiliary Flash LED

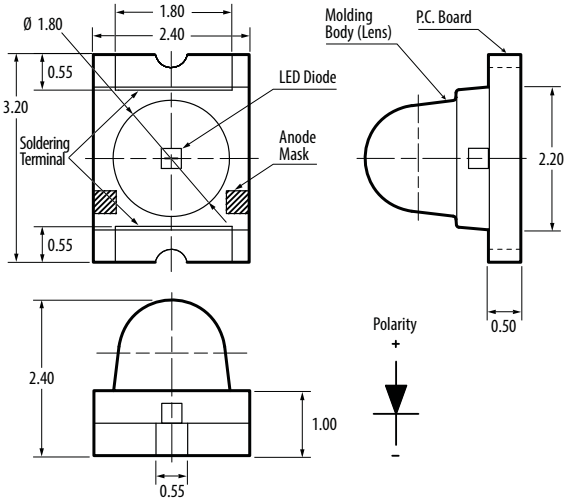

Standard Auto Focus Auxiliary Flash LED with 5.33 Height

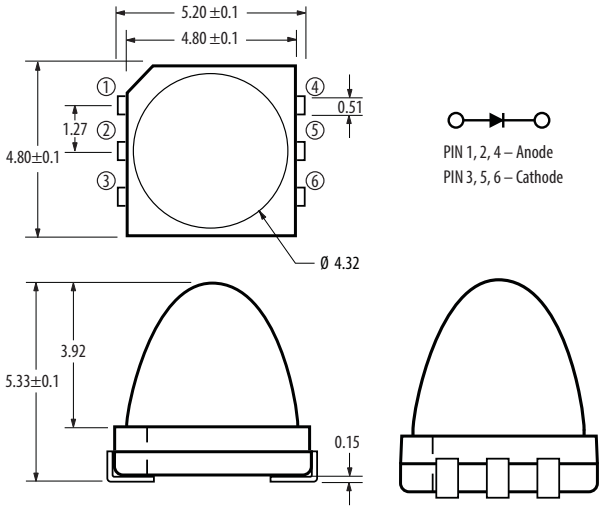

Standard Auto Focus Flash LED with 3.40mm Height

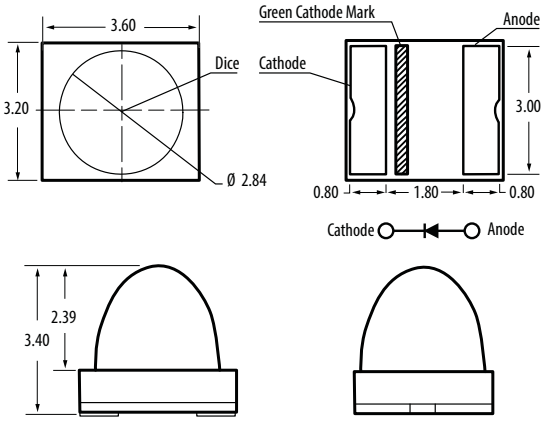

Side Firing Auto Focus Auxiliary Flash LED

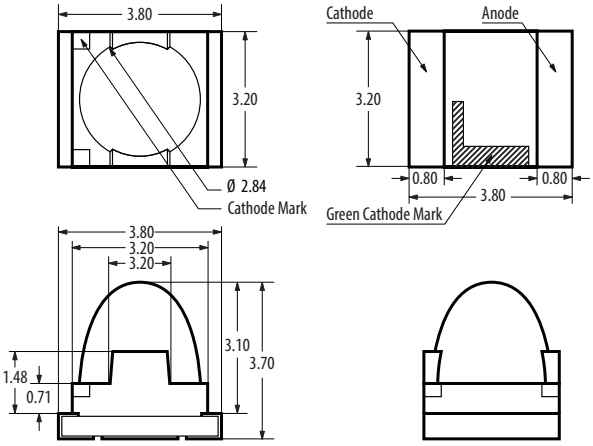

Notes:
1. All dimensions in millimeters.
2. Tolerance is ±0.1mm unless otherwise specified.

Seven-Segment Displays

Description

Broadcom offers a full range of seven-segment displays from low cost, standard brightness displays to high ambient light displays that produce up to 78 mcd per segment. Dual and single digit displays are available in assorted character heights and colors. They are divided into two platforms to address different market requirements in both industrial and consumer markets. Displays for industrial markets are designed for high-reliability applications and feature extremely durable packaging for high temperature environments. Consumer applications are designed for cost-sensitive, general-purpose display applications.

Benefits

- Semiconductor (LED) light source
  - Cost-effective solutions
  - Flexibility for designers
  - Light weight
- Lower power consumption
  - Electrical power savings
  - Low heat generation
  - Low current devices available
- Mechanically rugged
  - No wire filaments
  - No moving parts
  - Not sensitive to mechanical shock and vibration
- Essentially monochromatic light
  - No color filter required
  - Maximum use of visible light
  - Easy for the eye to discern against distracting backgrounds in sunlight and adverse weather conditions
  - High light output
  - Industry standard size and pinout
  - Categorized for luminous intensity (yellow and green categorized for color)

Industrial Applications: High Performance Seven-segment Display Package

Industrial grade products provide high peak current, automated IV/ color bining and the availability of intensity and color selection. Ideal for high reliability applications such as temperature controllers, this package is extremely durable in high temperature environments with better heat dissipation through a mild steel leadframe.

Key benefits for the leadframe platform

- Heat dissipation from the package is faster than other PCB display products
- Brightness (Iv) degradation reduced over time
- Lead stability and consistency
- Solder coated leads result in better solderability

Consumer Applications: Standard Seven-segment Display Package

Designed for the cost-competitive general purpose commercial LED display applications, this package is built with a PCB substrate using ultrasonic stitch-to-stitch bonding with aluminum wire.

Key benefits for the PCB platform

- Competitive prices
- Broadcom quality, reliability and technical support

Broadcom is committed to support the market by off ering display performance and features that are specific to the designer's application requirements.

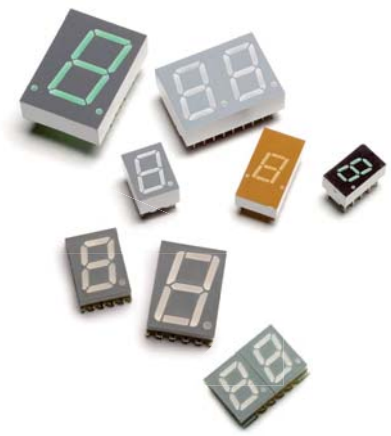

Typical Industrial Applications

High performance seven-segment Displays:

- Temperature controllers
- Test and measurement instrumentation
- Power converters
- Home appliance displays
- Automotive and avionic instrumentation
- Fuel pump displays
- Digital panel meters

Typical Consumer Applications

Standard seven-segment displays:

- Cable set-top boxes
- Electronics displays
- Gaming machines
- Point of sale terminals
- Answering machines
- Exercise equipment

Through-hole Seven-Segment Displays—Leadframe Platform

Part Number	Face Color	Pin Configuration	Intensity (µcd)		Iv Test Current (mA)	Vf Typ. (V)	Vf Test Current (mA)
			Min.	Typ.			
7.6 mm (0.3") Micro Bright Displays (right decimal point)							
GaP Red 626 nm							
HDSP-7501	Grey	Common Anode	360	980	5	2	20
HDSP-A211	Black	Common Anode	360	980	5	2	20
HDSP-7503	Grey	Common Cathode	360	980	5	2	20
HDSP-A213	Black	Common Cathode	360	980	5	2	20
GaP Orange 600 nm							
HDSP-A401	Grey	Common Anode	354	720	5	2	20
HDSP-A403	Grey	Common Cathode	354	720	5	2	20
GaP Yellow 586 nm							
HDSP-7401	Grey	Common Anode	225	480	5	2.2	20
HDSP-7403	Grey	Common Cathode	225	480	5	2.2	20
High Performance GaP Green 571 nm							
HDSP-7801	Grey	Common Anode	860	3000	10	2.1	10
HDSP-A511	Black	Common Anode	860	3000	10	2.1	10
HDSP-7803	Grey	Common Cathode	860	3000	10	2.1	10
HDSP-A513	Black	Common Cathode	860	3000	10	2.1	10
AlGaAs Red 637 nm							
HDSP-A151	Grey	Common Anode	690	1400	20	1.8	20
HDSP-A153	Grey	Common Cathode	690	1400	20	1.8	20
7.6 mm (0.3") Micro Bright Low Current Displays (right decimal point)							
AlGaAs Red 637 nm							
HDSP-A101	Grey	Common Anode	315	600	1	1.6	1
HDSP-A103	Grey	Common Cathode	315	600	1	1.6	1
HDSP-A113	Black	Common Cathode	315	600	1	1.6	1
GaP Red 626 nm							
HDSP-7511	Grey	Common Anode	160	270	2	1.6	2
HDSP-7513	Grey	Common Cathode	160	270	2	1.6	2
GaP Yellow 585 nm							
HDSP-A801	Grey	Common Anode	250	420	4	1.7	4
HDSP-A803	Grey	Common Cathode	250	420	4	1.7	4
GaP Green 571 nm							
HDSP-A901	Grey	Common Anode	250	475	4	1.9	4
HDSP-A903	Grey	Common Cathode	250	475	4	1.9	4

Through-hole Seven-Segment Displays—Leadframe Platform

Part Number	Face Color	Pin Configuration	Intensity (µcd)		Iv Test Current (mA)	Vf Typ. (V)	Vf Test Current (mA)
			Min.	Typ.			
7.6 mm (0.3") Micro Bright Overflow Displays (right decimal point)							
GaP Red 626 nm							
HDSP-7507	Grey	Common Anode	360	980	5	2	20
HDSP-7508	Grey	Common Cathode	360	980	5	2	20
HDSP-7517	Grey	Common Anode	160	270	2	1.6	2
GaP Green 571 nm							
HDSP-7807	Grey	Common Anode	860	3000	10	2.1	10
HDSP-7808	Grey	Common Cathode	860	3000	10	2.1	10

Part Number	Face Color	Pin Configuration	Intensity (µcd)		Iv Test Current (mA)	Vf Typ. (V)	Vf Test Current (mA)
			Min.	Typ.			
AlGaAs Red 637 nm (right hand decimal)							
HDSP-A107	Grey	Common Anode	135	600	1	1.6	1
HDSP-A108	Grey	Common Cathode	135	600	1	1.6	1
GaP Green 571 nm							
HDSP-A907	Grey	Common Anode	250	475	5	1.9	4
HDSP-A908	Grey	Common Cathode	250	475	5	1.9	4

Part Number	Face Color	Pin Configuration	Intensity		Iv Test Current (mA)	Vf Typ. (V)	Vf Test Current (mA)	Decimal Point
			Min.	Typ.				
7.6 mm (0.3") Single Digit Displays								
GaP Red 626 nm								
5082-7610	Red	Common Anode	340	800	5	2.1	20	Left
5082-7611	Red	Common Anode	340	800	5	2.1	20	Right
5082-7613	Red	Common Cathode	340	800	5	2.1	20	Right
GaP Yellow 586 nm								
5082-7620	Yellow	Common Anode	205	620	5	2.2	20	Left
5082-7621	Yellow	Common Anode	205	620	5	2.2	20	Right
5082-7623	Yellow	Common Cathode	205	620	5	2.2	20	Right
GaP Green 571 nm								
HDSP-3600	Green	Common Anode	860	2700	10	2.1	10	Left
HDSP-3601	Green	Common Anode	860	2700	10	2.1	10	Right
HDSP-3603	Green	Common Cathode	860	2700	10	2.1	10	Right

Through-hole Seven-Segment Displays—Leadframe Platform

Part Number	Face Color	Pin Configuration	Intensity (µcd)		Iv Test Current (mA)	Vf Typ. (V)	Vf Test Current (mA)
			Min.	Typ.			
8 mm (0.31") Micro Bright Displays (right decimal point)							
AlGaAs Red 637 nm							
HDSP-U101	Grey	Common Anode	315	600	1	1.8	20
HDSP-U111	Black	Common Anode	315	600	1	1.8	20
HDSP-U103	Grey	Common Cathode	315	600	1	1.8	20
HDSP-U113	Black	Common Cathode	315	600	1	1.8	20
GaP Red 626 nm							
HDSP-U201	Grey	Common Anode	360	980	5	2	20
HDSP-U211	Black	Common Anode	360	980	5	2	20
HDSP-U203	Grey	Common Cathode	360	980	5	2	20
HDSP-U213	Black	Common Cathode	360	980	5	2	20
GaP Orange 600 nm							
HDSP-U401	Grey	Common Anode	360	980	5	2	20
HDSP-U411	Black	Common Anode	360	980	5	2	20
HDSP-U403	Grey	Common Cathode	360	980	5	2	20
HDSP-U413	Black	Common Cathode	360	980	5	2	20
GaP Yellow 586 nm							
HDSP-U301	Grey	Common Anode	225	480	5	2.2	20
HDSP-U311	Black	Common Anode	225	480	5	2.2	20
HDSP-U303	Grey	Common Cathode	225	480	5	2.2	20
HDSP-U313	Black	Common Cathode	225	480	5	2.2	20
GaP Green 571 nm							
HDSP-U501	Grey	Common Anode	860	3000	10	2.1	10
HDSP-U511	Black	Common Anode	860	3000	10	2.1	10
HDSP-U503	Grey	Common Cathode	860	3000	10	2.1	10
HDSP-U513	Black	Common Cathode	860	3000	10	2.1	10

Through-hole Seven-Segment Displays—Leadframe Platform

Part Number	Face Color	Pin Configuration	Intensity (µcd)		Iv Test Current (mA)	Vf Typ. (V)	Vf Test Current (mA)
			Min.	Typ.			
10 mm (0.4”) Single Digit Displays (right decimal point)							
AlGaAs Red 637 nm							
HDSP-F111	Black	Common Anode	330	650	1	1.6	1
HDSP-F101	Grey	Common Anode	330	650	1	1.6	1
HDSP-F113	Black	Common Cathode	330	650	1	1.6	1
HDSP-F103	Grey	Common Cathode	330	650	1	1.8	1
HDSP-F151	Grey	Common Anode	7500	15000	20	1.8	20
HDSP-F153	Grey	Common Cathode	7500	15000	20	1.8	20
HDSP-F161	Black	Common Anode	7500	15000	20	1.8	20
GaP Red 626 nm							
HDSP-F211	Black	Common Anode	420	1200	5	2	20
HDSP-F201	Grey	Common Anode	420	1200	5	2	20
HDSP-F213	Black	Common Cathode	420	1200	5	2	20
HDSP-F203	Grey	Common Cathode	420	1200	5	2	20
GaP Orange 603 nm							
HDSP-F401	Grey	Common Anode	420	1200	5	2	20
HDSP-F413	Black	Common Cathode	420	1200	5	2	20
HDSP-F403	Grey	Common Cathode	420	1200	5	2	20
GaP Yellow 586 nm							
HDSP-F301	Grey	Common Anode	290	800	5	2.2	20
HDSP-F303	Grey	Common Cathode	290	800	5	2.2	20
GaP Green 571 nm							
HDSP-F511	Black	Common Anode	1030	3500	10	2.1	10
HDSP-F501	Grey	Common Anode	1030	3500	10	2.1	10
HDSP-F513	Black	Common Cathode	1030	3500	10	2.1	10
HDSP-F503	Grey	Common Cathode	1030	3500	10	2.1	10
10 mm (0.4”) Overflow Displays (right decimal point)							
AlGaAs Red 637 nm							
HDSP-F107	Grey	Common Anode	330	650	1	1.6	1
HDSP-F108	Grey	Common Cathode	330	650	1	1.6	1
HDSP-F157	Grey	Common Anode	7500	15000	20	1.8	20
HDSP-F158	Grey	Common Cathode	7500	15000	20	1.8	20
GaP Red 626 nm							
HDSP-F207	Grey	Common Anode	420	1200	5	2	20
HDSP-F208	Grey	Common Cathode	420	1200	5	2	20

Through-hole Seven-Segment Displays—Leadframe Platform

Part Number	Face Color	Pin Configuration	Intensity		Iv Test Current (mA)	Vf Typ. (V)	Vf Test Current (mA)	Decimal Point
			Min.	Typ.				
10.9 mm (0.43") Single Digit Displays								
AlGaAs Red 637 nm								
HDSP-E101	Grey	Common Anode	390	650	1	1.6	1	Right
HDSP-E103	Grey	Common Cathode	390	650	1	1.6	1	Right
HDSP-E151	Grey	Common Anode	8500	15000	20	1.8	20	Right
HDSP-E153	Grey	Common Cathode	8500	15000	20	1.8	20	Right
GaP Red 626 nm								
5082-7650	Red	Common Anode	340	1115	5	2.1	20	Left
5082-7651	Red	Common Anode	340	1115	5	2.1	20	Right
5082-7653	Red	Common Cathode	340	1115	5	2.1	20	Right
GaP Red 626 nm — Low Current								
HDSP-3351	Red	Common Anode	200	300	2	1.6	2	Right
HDSP-3353	Red	Common Cathode	200	300	2	1.6	2	Right
GaP Yellow 586 nm								
5082-7661	Yellow	Common Anode	290	835	5	2.2	20	Right
5082-7663	Yellow	Common Cathode	290	835	5	2.2	20	Right
GaP Green 571 nm								
HDSP-4600	Grey	Common Anode	1030	4000	10	2.1	10	Left
HDSP-4601	Grey	Common Anode	1030	4000	10	2.1	10	Right
HDSP-4603	Grey	Common Cathode	1030	4000	10	2.1	10	Right
10.9mm (0.43") Overflow Displays								
HDSP-3356	Red	Universal	200	300	2	1.6	2	Right

Part Number	Face Color	Pin Configuration	Intensity		Iv Test Current (mA)	Vf Typ. (V)	Vf Test Current (mA)	Decimal Point
			Min.	Typ.				
GaP Red 626 nm — Low Current								
5082-7656	Red	-	340	1115	5	2.1	20	Right
GaP Yellow 586 nm								
5082-7666	Yellow	-	290	835	5	2.2	20	Right
GaP Green 571 nm								
HDSP-4606	Grey	-	1030	4000	10	2.1	10	Right

Through-hole Seven-Segment Displays—Leadframe Platform

Part Number	Face Color	Pin Configuration	Intensity (µcd)		Iv Test Current (mA)	Vf Typ. (V)	Vf Test Current (mA)
			Min.	Typ.			
14.2 mm (0.56”) Single Digit Displays (right decimal point)							
AlGaAs Red 637 nm							
HDSP-H111	Black	Common Anode	400	700	1	1.6	1
HDSP-H101	Grey	Common Anode	400	700	1	1.6	1
HDSP-H113	Black	Common Cathode	400	700	1	1.6	1
HDSP-H103	Grey	Common Cathode	400	700	1	1.6	1
HDSP-H151	Grey	Common Anode	9100	16000	20	1.8	20
HDSP-H153	Grey	Common Cathode	9100	16000	20	1.8	20
GaP Red 626 nm							
HDSP-H211	Black	Common Anode	900	2800	10	2	20
HDSP-5501	Grey	Common Anode	900	2800	10	2.1	20
HDSP-H213	Black	Common Cathode	900	2800	10	2	20
HDSP-5503	Grey	Common Cathode	900	2800	10	2.1	20
GaP Red 626 nm — Low Current							
HDSP-5551	Grey	Common Anode	270	370	2	1.6	2
HDSP-5553	Grey	Common Cathode	270	370	2	1.6	2
GaP Orange 600 nm							
HDSP-H413	Black	Common Cathode	1190	2000	10	2	20
GaP Yellow 586 nm							
HDSP-5701	Grey	Common Anode	600	1800	10	2.1	20
HDSP-5703	Grey	Common Cathode	600	1800	10	2.1	20
GaP Green 571 nm							
HDSP-H511	Black	Common Anode	900	2500	10	2.1	10
HDSP-5601	Grey	Common Anode	900	2500	10	2.1	10
HDSP-H513	Black	Common Cathode	900	2500	10	2.1	10
HDSP-5603	Grey	Common Cathode	900	2500	10	2.1	10
14.2 mm (0.56”) Overflow Displays (right decimal point)							
AlGaAs Red 637 nm							
HDSP-H107	Grey	Common Anode	400	700	1	1.6	1
HDSP-H108	Grey	Common Cathode	400	700	1	1.6	1
HDSP-H157	Grey	Common Anode	9100	16000	20	1.8	20
HDSP-H158	Grey	Common Cathode	9100	16000	20	1.8	20
GaP Red 626 nm							
HDSP-5507	Grey	Common Anode	900	2800	10	2.1	20
HDSP-5508	Grey	Common Cathode	900	2800	10	2.1	20
GaP Red 626 nm — Low Current							
HDSP-5557	Grey	Common Anode	270	370	2	1.6	2
HDSP-5558	Grey	Common Cathode	270	370	2	1.6	2
GaP Green 571 nm							
HDSP-5607	Grey	Common Anode	900	2500	10	2.1	10
HDSP-5608	Grey	Common Cathode	900	2500	10	2.1	10

Through-hole Seven-Segment Displays—Leadframe Platform

Part Number	Face Color	Pin Configuration	Intensity (µcd)		Iv Test Current (mA)	Vf Typ. (V)	Vf Test Current (mA)
			Min.	Typ.			
14.2 mm (0.56”) Dual Digit Displays (right decimal point)							
AlGaAs Red 637 nm							
HDSP-K121	Grey	Common Anode	400	700	1	1.6	1
HDSP-K123	Grey	Common Cathode	400	700	1	1.6	1
AlGaAs Red 637 nm – Low Current							
HDSP-K111	Black	Common Anode	400	700	1	1.6	1
HDSP-K113	Black	Common Cathode	400	700	1	1.6	1
GaP Red 626 nm							
HDSP-5521	Grey	Common Anode	900	2800	10	2.1	20
HDSP-5523	Grey	Common Cathode	900	2800	10	2.1	20
HDSP-K211	Black	Common Anode	900	2800	10	2.0	20
HDSP-K213	Black	Common Anode	900	2800	10	2.0	20
GaP Yellow 586 nm							
HDSP-5721	Grey	Common Anode	600	1800	10	2.1	10
HDSP-5723	Grey	Common Cathode	600	1800	10	2.1	10
GaP Green 571 nm							
HDSP-5621	Grey	Common Anode	900	2500	10	2.1	10
HDSP-5623	Grey	Common Cathode	900	2500	10	2.1	10
HDSP-K511	Black	Common Anode	900	2500	10	2.1	10
HDSP-K513	Black	Common Cathode	900	2500	10	2.1	10

Part Number	Face Color	Pin Configuration	Intensity		Iv Test Current (mA)	Vf Typ. (V)	Vf Test Current (mA)	Decimal Point
			Min.	Typ.				
20 mm (0.8”) Single Digit Displays								
AlGaAs Red 637 nm								
HDSP-N101	Grey	Common Anode	270	590	1	1.6	1	Right
HDSP-N103	Grey	Common Cathode	270	590	1	1.6	1	Right
HDSP-N105	Grey	Common Cathode	270	590	1	1.6	1	Left
HDSP-N150	Grey	Common Anode	6000	14000	20	1.8	20	Left
HDSP-N151	Grey	Common Anode	6000	14000	20	1.8	20	Right
HDSP-N153	Grey	Common Cathode	6000	14000	20	1.8	20	Right
GaP Red 626 nm								
HDSP-3900	Grey	Common Anode	3350	48000	20	2.6	100	Left
HDSP-3901	Grey	Common Anode	3350	7000 Peak (1/5 df)		2.6	100	Right
HDSP-3903	Grey	Common Cathode	3350	7000		2.6	100	Right
HDSP-3905	Grey	Common Cathode	3350	7000		2.6	100	Left
GaP Yellow 586 nm								
HDSP-4201	Grey	Common Anode	2200	7000		2.6	100	Right
HDSP-4203	Grey	Common Cathode	2200	7000		2.6	100	Right
GaP Green 571 nm								
HDSP-8601	Grey	Common Anode	680	1500	10	2.1	10	Right
HDSP-8603	Grey	Common Cathode	680	1500	10	2.1	10	Right

Through-hole Seven-Segment Displays—PCB Platform

Part Number	Face Color	Pin Configuration	Intensity (µcd)		Iv Test Current (mA)	Vf Typ. (V)	Vf Test Current (mA)	Decimal Point
			Min.	Typ.				
7.62 mm (0.3") Single Digit Display								
GaP Red 620 nm								
HDSP-333E	Grey	Common Cathode	800	1800	10	2.05	20	Right
GaP Green 573 nm								
HDSP-333G	Grey	Common Cathode	800	2000	10	2.25	20	Right
AlGaAs Red 643 nm								
HDSP-333A	Grey	Common Cathode	2001	4200	10	1.85	20	Right
9.1 mm (0.36")Single Digit Display								
AlGaAs Red 643 nm								
HDSP-C3A1	Grey	Common Anode	-	7500	10	1.85	20	Right
HDSP-C3A3	Grey	Common Cathode	-	7500	10	1.85	20	Right
GaAsP Red 626 nm								
HDSP-C3E1	Grey	Common Anode	-	1100	10	2.0	20	Right
HDSP-C3E3	Grey	Common Cathode	-	1100	10	2.0	20	Right
AlInGaP Deep Red 635 nm								
HDSP-H3A1	Grey	Common Anode	-	12000	10	2.0	20	Right
HDSP-H3A3	Grey	Common Cathode	-	12000	10	2.0	20	Right
AlInGaP Red 625 nm								
HDSP-H3E1	Grey	Common Anode	-	15000	10	2.0	20	Right
HDSP-H3E3	Grey	Common Cathode	-	15000	10	2.0	20	Right
AlInGaP Orange 605 nm								
HDSP-H3L1	Grey	Common Anode	-	13000	10	2.0	20	Right
HDSP-H3L3	Grey	Common Cathode	-	13000	10	2.0	20	Right
AlInGaP Green 573 nm								
HDSP-H3G1	Grey	Common Anode	-	5000	10	2.0	20	Right
HDSP-H3G3	Grey	Common Cathode	-	5000	10	2.0	20	Right
10 mm (0.4") Slim Font Single Digit Display								
GaP Red 625 nm								
HDSP-301E	Grey	Common Anode	1100	1100	10	1.90	20	Right
HDSP-303E	Grey	Common Cathode	1100	1100	10	1.90	20	Right
GaP Green 573 nm								
HDSP-301G	Grey	Common Anode	1800	2800	10	2.25	20	Right
HDSP-303G	Grey	Common Cathode	1800	2800	10	2.25	20	Right
AlGaAs Red 643 nm								
HDSP-301A	Grey	Common Anode	280	450	1	1.80	20	Right
HDSP-303A	Grey	Common Cathode	280	450	1	1.80	20	Right
GaP Yellow 590 nm								
HDSP-301Y	Grey	Common Anode	1100	1800	10	2.15	20	Right
HDSP-303Y	Grey	Common Cathode	1100	1800	10	2.15	20	Right

Through-hole Seven-Segment Displays—PCB Platform

Part Number	Face Color	Pin Configuration	Intensity (µcd)		Iv Test Current (mA)	Vf Typ. (V)	Vf Test Current (mA)	Decimal Point
			Min.	Typ.				
10.16 mm (0.4") Single Digit Display								
GaP Red 620 nm								
HDSP-311E	Grey	Common Anode	1250	3200	10	2.05	20	Right
HDSP-313E	Grey	Common Cathode	1250	3200	10	2.05	20	Right
GaP Green 573 nm								
HDSP-311G	Grey	Common Anode	1250	3200	10	2.25	20	Right
HDSP-313G	Grey	Common Cathode	1250	3200	10	2.25	20	Right
AlGaAs Red 643 nm								
HDSP-311A	Grey	Common Anode	3200	7500	10	1.85	20	Right
HDSP-313A	Grey	Common Cathode	3200	7500	10	1.85	20	Right
GaP Yellow 590 nm								
HDSP-311Y	Grey	Common Anode	800	1500	10	2.15	20	Right
HDSP-313Y	Grey	Common Cathode	800	1500	10	2.15	20	Right
10.16 mm (0.4") Dual Digit Display								
GaP Red 620 nm								
HDSP-G01E	Grey	Common Anode	1250	2600	10	2.05	20	-
HDSP-G03E	Grey	Common Cathode	1250	2600	10	2.05	20	-
GaP Green 573 nm								
HDSP-G01G	Grey	Common Anode	1250	3200	10	2.25	20	-
HDSP-G03G	Grey	Common Cathode	1250	3200	10	2.25	20	-
AlGaAs Red 643 nm								
HDSP-G01A	Grey	Common Anode	3200	6500	10	1.85	20	-
HDSP-G03A	Grey	Common Cathode	3200	6500	10	1.85	20	-
GaP Yellow 590 nm								
HDSP-G01Y	Grey	Common Anode	800	1500	10	2.15	20	-
HDSP-G03Y	Grey	Common Cathode	800	1500	10	2.15	20	-

Through-hole Seven-Segment Displays—PCB Platform

Part Number	Face Color	Pin Configuration	Intensity (µcd)		Iv Test Current (mA)	Vf Typ. (V)	Vf Test Current (mA)	Decimal Point
			Min.	Typ.				
0.56" Slim Font Single Digit Display								
GaP Red 625 nm								
HDSP-561E	Grey	Common Anode	1100	1800	10	1.90	20	Right
HDSP-563E	Grey	Common Cathode	1100	1800	10	1.90	20	Right
GaP Green 573 nm								
HDSP-561G	Grey	Common Anode	1800	2800	10	2.25	20	Right
HDSP-563G	Grey	Common Cathode	1800	2800	10	2.25	20	Right
AlGaAs Red 643 nm								
HDSP-561A	Grey	Common Anode	280	450	1	2.1	20	Right
HDSP-563A	Grey	Common Cathode	280	450	1	2.1	20	Right
GaP Yellow 590 nm								
HDSP-561Y	Grey	Common Anode	1800	2800	10	1.80	20	Right
HDSP-563Y	Grey	Common Cathode	1800	2800	10	1.80	20	Right
13.1mm (0.52")Single Digit Display								
AlGaAs Red 643 nm								
HDSP-C5A1	Grey	Common Anode	-	16000	10	1.85	20	Right
HDSP-C5A3	Grey	Common Cathode	-	16000	10	1.85	20	Right
AlInGaP Deep Red 635 nm								
HDSP-H5A1	Grey	Common Anode	-	35000	10	2.0	20	Right
HDSP-H5A3	Grey	Common Cathode	-	35000	10	2.0	20	Right
AlInGaP Red 625 nm								
HDSP-H5E1	Grey	Common Anode	-	40000	10	2.0	20	Right
HDSP-H5E3	Grey	Common Cathode	-	40000	10	2.0	20	Right
AlInGaP Orange 605 nm								
HDSP-H5L1	Grey	Common Anode	-	40000	10	2.0	20	Right
HDSP-H5L3	Grey	Common Cathode	-	40000	10	2.0	20	Right
AlInGaP Green 573 nm								
HDSP-H5G1	Grey	Common Anode	-	15000	10	2.0	20	Right
HDSP-H5G3	Grey	Common Cathode	-	15000	10	2.0	20	Right

Through-hole Seven-Segment Displays—PCB Platform

Part Number	Face Color	Pin Configuration	Intensity (µcd)		Iv Test Current (mA)	Vf Typ. (V)	Vf Test Current (mA)	Decimal Point
			Min.	Typ.				
14.2 mm (0.56”) Single Digit Display								
GaP Red 620 nm								
HDSP-511E	Grey	Common Anode	2001	4100	10	2.05	20	Right
HDSP-513E	Grey	Common Cathode	2001	4100	10	2.05	20	Right
GaP Green 573 nm								
HDSP-511G	Grey	Common Anode	2001	4100	10	2.25	20	Right
HDSP-513G	Grey	Common Cathode	2001	4100	10	2.25	20	Right
AlGaAs Red 643 nm								
HDSP-511A	Grey	Common Anode	3201	6500	10	1.85	20	Right
HDSP-513A	Grey	Common Cathode	3201	6500	10	1.85	20	Right
GaP Yellow 590 nm								
HDSP-511Y	Grey	Common Anode	1251	2600	10	2.15	20	Right
HDSP-513Y	Grey	Common Cathode	1251	2600	10	2.15	20	Right
14.2 mm (0.56”) Dual Digit Displays								
GaP Yellow 587 nm								
HDSP-521Y	Grey	Common Anode	1520	2300	10	2.1	20	Right
HDSP-523Y	Grey	Common Cathode	1520	2300	10	2.1	20	Right
GaP Red 626 nm								
HDSP-521E	Grey	Common Anode	2280	4000	10	2.1	20	Right
HDSP-523E	Grey	Common Cathode	2280	4000	10	2.1	20	Right
GaP Green 571 nm								
HDSP-521G	Grey	Common Anode	2280	3500	10	2.1	10	Right
HDSP-523G	Grey	Common Cathode	2280	3500	10	2.1	10	Right
AlGaAs Red 643 nm								
HDSP-521A	Grey	Common Anode	–	6500	10	1.85	20	Right
HDSP-523A	Grey	Common Cathode	–	6500	10	1.85	20	Right

Through-hole Seven-Segment Displays—PCB Platform

Part Number	Face Color	Pin Configuration	Intensity (µcd)		Iv Test Current (mA)	Vf Typ. (V)	Vf Test Current (mA)	Decimal Point
			Min.	Typ.				
20 mm (0.8”) Single Digit Display								
GaP Red 626 nm								
HDSP-815E	Grey	Common Anode	2300	4800	20	2.1	20	Right
HDSP-816E	Grey	Common Cathode	2300	4800	20	2.1	20	Right
GaP Green 571 nm								
HDSP-815G	Grey	Common Anode	1500	3300	20	2.1	20	Right
HDSP-816G	Grey	Common Cathode	1500	3300	20	2.1	20	Right
20mm (0.8”)Single Digit Display								
AlGaAs Red 643 nm								
HDSP-C8A1	Grey	Common Anode	-	18200	10	1.85	20	Right
HDSP-C8A3	Grey	Common Cathode	-	18200	10	1.85	20	Right
GaAsP Red 626 nm								
HDSP-C8E1	Grey	Common Anode	-	4800	10	2.0	20	Right
HDSP-C8E3	Grey	Common Cathode	-	4800	10	2.0	20	Right
GaAsP Orange								
HDSP-C8L1	Grey	Common Anode	-	4500	10	2.15	20	Right
HDSP-C8L3	Grey	Common Cathode	-	4500	10	2.15	20	Right
GaP Green								
HDSP-C8G1	Grey	Common Anode	-	5000	10	2.25	20	Right
HDSP-C8G3	Grey	Common Cathode	-	5000	10	2.25	20	Right
AlInGaP Deep Red 635 nm								
HDSP-H8A1	Grey	Common Anode	-	29000	10	2.0	20	Right
HDSP-H8A3	Grey	Common Cathode	-	29000	10	2.0	20	Right
AlInGaP Red 625 nm								
HDSP-H8E1	Grey	Common Anode	-	30000	10	2.0	20	Right
HDSP-H8E3	Grey	Common Cathode	-	30000	10	2.0	20	Right
AlInGaP Orange 605 nm								
HDSP-H8L1	Grey	Common Anode	-	35000	10	2.0	20	Right
HDSP-H8L3	Grey	Common Cathode	-	35000	10	2.0	20	Right
AlInGaP Green 571 nm								
HDSP-H8G1	Grey	Common Anode	-	12000	10	2.0	20	Right
HDSP-H8G3	Grey	Common Cathode	-	12000	10	2.0	20	Right

Through-hole Seven-Segment Displays—PCB

Part Number	Face Color	Pin Configuration	Intensity (µcd)		Iv Test Current (mA)	Vf Typ. (V)	Vf Test Current (mA)	Decimal Point
			Min.	Typ.				
20 mm (0.8”) Single Digit Display								
AlInGaP Deep Red 635 nm								
HDSP-H1A1	Grey	Common Anode	–	70000	10	4.0	20	Right
HDSP-H1A3	Grey	Common Cathode	–	70000	10	4.0	20	Right
AlInGaP Red 625 nm								
HDSP-H1E1	Grey	Common Anode	–	70000	10	4.0	20	Right
HDSP-H1E3	Grey	Common Cathode	–	70000	10	4.0	20	Right
AlInGaP Green 571 nm								
HDSP-H1G1	Grey	Common Anode	–	25000	10	4.0	20	Right
HDSP-H1G3	Grey	Common Cathode	–	25000	10	4.0	20	Right
56.80mm (2.3”) Single Digit Display								
AlInGaP Deep Red 635 nm								
HDSP-H2A1	Grey	Common Anode	–	95000	10	8.0	20	Right
HDSP-H2A3	Grey	Common Cathode	–	95000	10	8.0	20	Right
AlInGaP Red 625 nm								
HDSP-H2E1	Grey	Common Anode	–	105000	10	8.0	20	Right
HDSP-H2E3	Grey	Common Cathode	–	105000	10	8.0	20	Right
AlInGaP Green 571 nm								
HDSP-H2G1	Grey	Common Anode	–	38000	10	8.0	20	Right
HDSP-H2G3	Grey	Common Cathode	–	38000	10	8.0	20	Right

Surface Mount Seven-Segment Displays—PCB Platform

Part Number	Face Color	Pin Configuration	Intensity (mcd)		Iv Test Current (mA)	Vf Typ. (V)	Vf Test Current (mA)	Decimal Point
			Min.	Typ.				
7.0mm (0.28") Single Digit SMT Display								
AlInGaP Red 624 nm								
HDSM-281C	Grey	Common Anode	3.4	7.5	10	2	20	Upper and Lower
HDSM-283C	Grey	Common Cathode	3.4	7.5	10	2	20	Upper and Lower
AlInGaP Green 571 nm								
HDSM-281H	Grey	Common Anode	3.4	6	10	2.1	20	Upper and Lower
HDSM-283H	Grey	Common Cathode	3.4	6	10	2.1	20	Upper and Lower
AlInGaP Yellow 589 nm								
HDSM-281F	Grey	Common Anode	3.4	8	10	2.1	20	Upper and Lower
HDSM-283F	Grey	Common Cathode	3.4	8	10	2.1	20	Upper and Lower
AlInGaP Orange 605 nm								
HDSM-281L	Grey	Common Anode	3.4	8.5	10	2.1	20	Upper and Lower
HDSM-283L	Grey	Common Cathode	3.4	8.5	10	2.1	20	Upper and Lower
InGaN Blue 470 nm								
HDSM-281B	Grey	Common Anode	3.4	6	10	3.3	20	Upper and Lower
HDSM-283B	Grey	Common Cathode	3.4	6	10	3.3	20	Upper and Lower
7.0 mm (0.28") Dual Digit SMT Display								
AlInGaP Red 624 nm								
HDSM-291C	Grey	Common Anode	3.4	7.5	10	2	20	Upper and Lower
HDSM-293C	Grey	Common Cathode	3.4	7.5	10	2	20	Upper and Lower
AlInGaP Green 571 nm								
HDSM-291H	Grey	Common Anode	3.4	6	10	2.1	20	Upper and Lower
HDSM-293H	Grey	Common Cathode	3.4	6	10	2.1	20	Upper and Lower
AlInGaP Yellow 589 nm								
HDSM-291F	Grey	Common Anode	3.4	8	10	2.1	20	Upper and Lower
HDSM-293F	Grey	Common Cathode	3.4	8	10	2.1	20	Upper and Lower
AlInGaP Orange 605 nm								
HDSM-291L	Grey	Common Anode	3.4	8.5	10	2.1	20	Upper and Lower
HDSM-293L	Grey	Common Cathode	3.4	8.5	10	2.1	20	Upper and Lower
InGaN Blue 470 nm								
HDSM-291B	Grey	Common Anode	3.4	6	10	3.3	20	Upper and Lower
HDSM-293B	Grey	Common Cathode	3.4	6	10	3.3	20	Upper and Lower

Surface Mount Seven-Segment Displays—PCB Platform

Part Number	Face Color	Pin Configuration	Intensity (mcd)		Iv Test Current (mA)	Vf Typ. (V)	Vf Test Current (mA)	Decimal Point
			Min.	Typ.				
10 mm (0.39") Single Digit SMT Display								
AlInGaP Red 624 nm								
HDSM-431C	Grey	Common Anode	8.6	14.3	10	2	20	Right
HDSM-433C	Grey	Common Cathode	8.6	14.3	10	2	20	Right
AlInGaP Green 571 nm								
HDSM-431H	Grey	Common Anode	5.4	9	10	2.1	20	Right
HDSM-433H	Grey	Common Cathode	5.4	9	10	2.1	20	Right
AlInGaP Yellow 589 nm								
HDSM-431F	Grey	Common Anode	8.6	15	10	2.1	20	Right
HDSM-433F	Grey	Common Cathode	8.6	15	10	2.1	20	Right
AlInGaP Orange 605 nm								
HDSM-431L	Grey	Common Anode	8.6	16	10	2.1	20	Right
HDSM-433L	Grey	Common Cathode	8.6	16	10	2.1	20	Right
InGaN Blue 470nm								
HDSM-431B	Grey	Common Anode	5.4	11.2	10	3.3	20	Right
HDSM-433B	Grey	Common Cathode	5.4	11.2	10	3.3	20	Right
InGaN White								
HDSM-431W	Grey	Common Anode	24	40	5	2.95	5	Right
HDSM-433W	Grey	Common Cathode	24	40	5	2.95	5	Right
10 mm (0.39") Dual Digit SMT Display								
AlInGaP Red 624 nm								
HDSM-441C	Grey	Common Anode	8.6	14.3	10	2	20	Right
HDSM-443C	Grey	Common Cathode	8.6	14.3	10	2	20	Right
AlInGaP Green 571 nm								
HDSM-441H	Grey	Common Anode	5.4	9	10	2.1	20	Right
HDSM-443H	Grey	Common Cathode	5.4	9	10	2.1	20	Right
AlInGaP Yellow 589 nm								
HDSM-441F	Grey	Common Anode	8.6	15	10	2.1	20	Right
HDSM-443F	Grey	Common Cathode	8.6	15	10	2.1	20	Right
AlInGaP Orange 605 nm								
HDSM-441L	Grey	Common Anode	8.6	16	10	2.1	20	Right
HDSM-443L	Grey	Common Cathode	8.6	16	10	2.1	20	Right
InGaN Blue 470 nm								
HDSM-441B	Grey	Common Anode	5.4	11.2	10	3.3	20	Right
HDSM-443B	Grey	Common Cathode	5.4	11.2	10	3.3	20	Right
InGaN White								
HDSM-441W	Grey	Common Anode	24	40	5	2.95	5	Right
HDSM-443W	Grey	Common Cathode	24	40	5	2.95	5	Right

Surface Mount Seven-Segment Displays—PCB Platform

Part Number	Face Color	Pin Configuration	Intensity (mcd)		Iv Test Current (mA)	Vf Typ. (V)	Vf Test Current (mA)	Decimal Point
			Min.	Typ.				
14.22 mm (0.56”) Single Digit SMT Display								
AlInGaP Red 624 nm								
HDSM-531C	Grey	Common Anode	8.6	16	10	2	20	Right
HDSM-533C	Grey	Common Cathode	8.6	16	10	2	20	Right
AlInGaP Green 571 nm								
HDSM-531H	Grey	Common Anode	5.4	10.5	10	2.1	20	Right
HDSM-533H	Grey	Common Cathode	5.4	10.5	10	2.1	20	Right
AlInGaP Yellow 589 nm								
HDSM-531F	Grey	Common Anode	8.6	20	10	2.1	20	Right
HDSM-533F	Grey	Common Cathode	8.6	20	10	2.1	20	Right
AlInGaP Orange 605 nm								
HDSM-531L	Grey	Common Anode	8.6	19.5	10	2.1	20	Right
HDSM-533L	Grey	Common Cathode	8.6	19.5	10	2.1	20	Right
InGaN Blue 470nm								
HDSM-531B	Grey	Common Anode	5.4	13.5	10	3.3	20	Right
HDSM-533B	Grey	Common Cathode	5.4	13.5	10	3.3	20	Right
InGaN White								
HDSM-531W	Grey	Common Anode	28	44	5	2.95	5	Right
HDSM-533W	Grey	Common Cathode	28	44	5	2.95	5	Right
14.22mm (0.56”) Dual Digit SMT Display								
AlInGaP Red 624 nm								
HDSM-541C	Grey	Common Anode	8.6	16	10	2	20	Right
HDSM-543C	Grey	Common Cathode	8.6	16	10	2	20	Right
AlInGaP Green 571 nm								
HDSM-541H	Grey	Common Anode	5.4	10.5	10	2.1	20	Right
HDSM-543H	Grey	Common Cathode	5.4	10.5	10	2.1	20	Right
AlInGaP Yellow 589 nm								
HDSM-541F	Grey	Common Anode	8.6	20	10	2.1	20	Right
HDSM-543F	Grey	Common Cathode	8.6	20	10	2.1	20	Right
AlInGaP Orange 605 nm								
HDSM-541L	Grey	Common Anode	8.6	19.5	10	2.1	20	Right
HDSM-543L	Grey	Common Cathode	8.6	19.5	10	2.1	20	Right
InGaN Blue 470 nm								
HDSM-541B	Grey	Common Anode	5.4	13.5	10	3.3	20	Right
HDSM-543B	Grey	Common Cathode	5.4	13.5	10	3.3	20	Right
InGaN White								
HDSM-541W	Grey	Common Anode	28	44	5	2.95	5	Right
HDSM-543W	Grey	Common Cathode	28	44	5	2.95	5	Right

Through-hole Seven-Segment Displays—PCB Platform
Luminous Intensity Categories (Typ.)

7.62 mm (0.3”) Single Digit

Bin ID	Iv in mcd	
	Min.	Max.
GaP Red HDSP-33xE		
G	0.801	1.250
H	1.251	2.000
I	2.001	3.200
GaP Green HDSP-33xG		
G	0.801	1.250
H	1.251	2.000
I	2.001	3.200
AlGaAs Red HDSP-33xA		
I	2.001	3.200
J	3.201	5.050
K	5.051	8.000

10.16 mm (0.4”) Single Digit

Bin ID	Iv in mcd	
	Min.	Max.
GaP Red HDSP-31xE		
H	1.251	2.000
I	2.001	3.200
J	3.201	5.050
GaP Green HDSP-31xG		
H	1.251	2.000
I	2.001	3.200
J	3.201	5.050
AlGaAs Red HDSP-31xA		
J	3.201	5.050
K	5.051	8.000
L	8.001	12.650
GaP Yellow HDSP-31xY		
G	0.801	1.250
H	1.251	2.000
I	2.001	3.200

13 mm (0.56”) Slim Font Single Digit

Bin ID	Iv in mcd	
	Min.	Max.
GaP Red HDSP-56xE		
I	1.100	2.200
K	1.800	3.600
GaP Green HDSP-56xG		
K	1.800	3.600
L	2.800	5.600
AlGaAs Red HDSP-56xA		
F	0.280	0.560
G	0.450	0.900
GaP Yellow HDSP-56xY		
I	1.100	2.200
K	1.800	3.600

10 mm (0.4”) Slim Font Single Digit

Bin ID	Iv in mcd	
	Min.	Max.
GaP Red HDSP-30xE		
I	1.100	2.200
K	1.800	3.600
GaP Green HDSP-30xG		
K	1.800	3.600
L	2.800	5.600
AlGaAs Red HDSP-30xA		
F	0.280	0.560
G	0.450	0.900
GaP Yellow HDSP-30xY		
I	1.100	2.200
K	1.800	3.600

10.16 mm (0.4”D) Dual Digit

Bin ID	Iv in mcd	
	Min.	Max.
GaP Red HDSP-G0xE		
H	1.251	2.000
I	2.001	3.200
J	3.201	5.050
GaP Green HDSP-G0xG		
H	1.251	2.000
I	2.001	3.200
J	3.201	5.050
AlGaAs Red HDSP-G0xA		
J	3.201	5.050
K	5.051	8.000
L	8.001	12.650
GaP Yellow HDSP-G0xY		
G	0.801	1.250
H	1.251	2.000
I	2.001	3.200

Through-hole Seven-Segment Displays—PCB Platform

14.22 mm (0.56”) Single Digit

Bin ID	Customer Iv in mcd	
	Min.	Max.
GaP Red HDSP-51xE		
I	2.001	3.200
J	3.201	5.050
K	5.051	8.000
GaP Green HDSP-51xG		
I	2.001	3.200
J	3.201	5.050
K	5.051	8.000
AlGaAs Red HDSP-51xA		
J	3.201	5.050
K	5.051	8.000
L	8.001	12.650
GaP Yellow HDSP-51xY		
H	1.251	2.000
I	2.001	3.200
J	3.201	5.050

0.56” Dual Digit

Bin ID	Customer Iv in mcd	
	Min.	Max.
GaP Red HDSP-52xE		
G	2.28	3.42
H	3.42	5.13
I	5.13	7.69
GaP Yellow HDSP-52xY		
F	1.52	2.28
G	2.28	3.42
H	3.42	5.13
GaP Green HDSP-52xG		
G	2.28	3.42
H	3.42	5.13
AlGaAs Red HDSP-52xA		
J	3.201	5.050
K	5.051	8.000
L	8.001	12.650

0.8” Single Digit

Bin ID	Customer Iv in mcd	
	Min.	Max.
GaP Red HDSP-81xE		
N	4.78	8.34
P	6.82	11.86
Q	9.7	16.61
GaP Green HDSP-81xG		
P	6.82	11.86
Q	9.7	16.61
R	13.6	23.74

Single Digit (HDSP-H3xx, HDSP-H5xx, HDSP-H8xx, HDSP-H1xx,HDSP-H2xx)

Bin ID	Intensity (mcd)	
	Min.	Max.
F	1.276	1.660
G	1.661	2.160
H	2.161	2.800
I	2.801	3.640
J	3.641	4.730
K	4.731	6.150
L	6.151	7.990
M	7.991	10.400
N	10.401	13.500
O	13.501	17.550
P	17.551	22.800
Q	22.801	29.600
R	29.601	38.500
S	38.501	50.100
T	50.101	65.100
U	65.101	84.600
V	84.601	101.500
W	101501	121.800
X	121.801	146.100
Y	146.101	175.300
Z	175.301	210.300

Iv Tolerance = ±15%

Surface Mount Seven-Segment Displays

10mm (0.28”) Single Digit SMT Display

Bin ID	Iv in mcd	
	Min.	Max.
AlInGaP Green HDSM-281H HDSM-283H		
L	3.401	5.400
M	5.401	8.600
AlInGaP Red/Orange/Yellow HDSM-281C/281L/281F HDSM-283C/283L/283F		
L	3.401	5.400
M	5.401	8.600
N	8.601	13.700
InGaN Blue HDSM-281B HDSM-283B		
L	3.401	5.400
M	5.401	8.600
N	8.601	13.700

10mm (0.28”) Dual Digit SMT Display

Bin ID	Iv in mcd	
	Min.	Max.
AlInGaP Green HDSM-291H HDSM-293H		
L	3.401	5.400
M	5.401	8.600
GAlInGaP Red/Orange/Yellow HDSM-291C/291L/291F HDSM-293C/293L/293F		
L	3.401	5.400
M	5.401	8.600
N	8.601	13.700
InGaN Blue HDSM-291B HDSM-293B		
L	3.401	5.400
M	5.401	8.600
N	8.601	13.700

10mm (0.39”) Single Digit SMT Display

Bin ID	Iv in mcd	
	Min.	Max.
AlInGaP Green HDSM-431H HDSM-433H		
M	5.401	8.600
N	8.601	13.700
P	13.701	21.800
AlInGaP Red/Yellow HDSM-431C/431F HDSM-433C/433F		
N	8.601	13.700
P	13.701	21.800
Q	21.801	34.700
AlInGaP Orange HDSM-431L HDSM-433L		
N	8.601	13.700
P	13.701	21.800
Q	21.801	34.700
R	34.701	55.200
InGaN Blue HDSM-431B HDSM-433B		
M	5.401	8.600
N	8.601	13.700
P	13.701	21.800

Surface Mount Seven-Segment Displays
Luminous Intensity Categories (Typ.)

10mm (0.39”) Dual Digit

Bin ID	Customer Iv in mcd	
	Min.	Max.
AlInGaP Green HDSM-441H HDSM-443H		
M	5.401	8.600
N	8.601	13.700
P	13.701	21.800
AlInGaP Red/Yellow HHDSM-441C/441F HDSM-443C/443F		
N	8.601	13.700
P	13.701	21.800
Q	21.801	34.700
AlInGaP Orange HDSM-441L HDSM-443L		
N	8.601	13.700
P	13.701	21.800
Q	21.801	34.700
R	34.701	55.200
InGaN Blue HDSM-441B HDSM-443B		
M	5.401	8.600
N	8.601	13.700
P	13.701	21.800

14.22mm (0.56”) Single Digit

Bin ID	Customer Iv in mcd	
	Min.	Max.
AlInGaP GreeN HDSM-531H HDSM-533H		
M	5.401	8.600
N	8.601	13.700
AlInGaP Red HDSM-531C HDSM-533C		
N	8.601	13.700
P	13.701	21.800
AlInGaP Orange/Yellow HDSM-531L/531F HDSM-533L/533F		
N	8.601	13.700
P	13.701	21.800
Q	21.801	34.700
InGaN Blue HDSM-531B HDSM-533B		
M	5.401	8.600
N	8.601	13.700
P	13.701	21.800
Q	21.801	34.700

14.22mm (0.56”) Dual Digit

Bin ID	Customer Iv in mcd	
	Min.	Max.
AlInGaP Green HDSM-541H HDSM-543H		
M	5.401	8.600
N	8.601	13.700
AlInGaP Red HDSM-541C HDSM-543C		
N	8.601	13.700
P	13.701	21.800
AlInGaP Orange/Yellow HHDSM-541L/541F HDSM-543L/543F		
N	8.601	13.700
P	13.701	21.800
Q	21.801	34.700
InGaN Blue HDSM-541B HDSM-543B		
M	5.401	8.600
N	8.601	13.700
P	13.701	21.800
Q	21.801	34.700

Through-hole Seven-Segment Displays—Leadframe Platform

7.6 mm (0.3”) Micro Bright Displays Package Dimension

Part Number		
HDSP-	A151	A211
	7501	A213
	A401	A511
	A411	A513
	7401	
	7801	
	A153	
	7503	
	A403	
	A413	
	7403	
	7803	

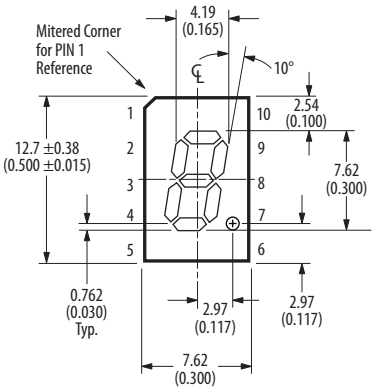

7.6 mm (0.3”) Micro Bright Overflow Displays (Right Decimal Point) Package Dimension

Part Number	
HDSP-	7507
	A407
	7407
	7807
	7508
	A408
	7408
	7808

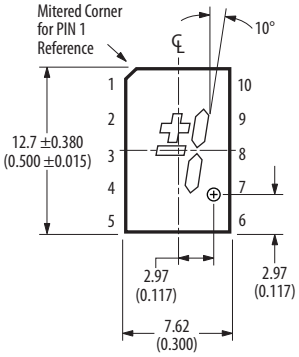

7.6 mm (0.3”) Micro Bright Low Current Displays (Right Decimal Point) Package Dimension

Part Number		
HDSP-	A101	A111
	7511	A113
	A801	
	A901	
	A103	
	7513	
	A803	
	A903	

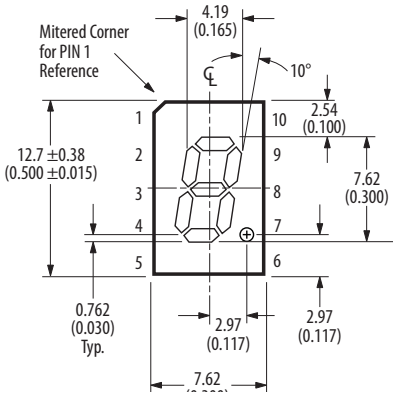

7.6 mm (0.3”) Single Digit Displays Package Dimension

Part Number	
5082-	7610
	7611
	7613
	7620
	7621
	7623
	3600
	3601
	3603

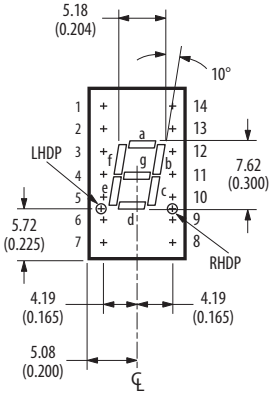

8 mm (0.31”) Micro Bright Displays Package Dimension

Part Number	
HDSP-	Uxxx

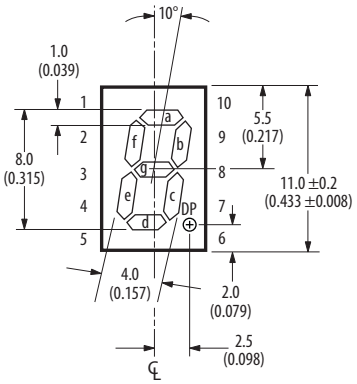

10 mm (0.4”) Single Digit Displays (Right Decimal Point) Package Dimension

Part Number		
HDSP-	F111	F113
	F211	F213
	F511	F513
	F101	F103
	F201	F203
	F401	F403
	F411	F413
	F301	F303
	F501	F503
	F511	F513

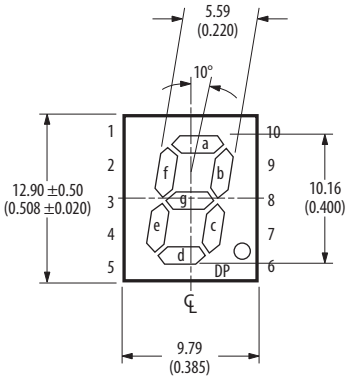

Note:
1. Dimensions in millimeters (inches).

Through-hole Seven-Segment Displays—Leadframe Platform

10 mm (0.4”) Overflow Displays (Right Decimal Point) Package Dimension

Part Number		
HDSP-	F107	F108
	F207	F208
	F407	F408
	F307	F308
	F507	F508

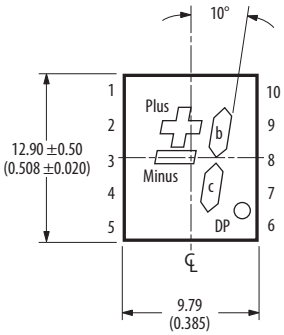

10.9 mm (0.43”) Single Digit Displays (Right Decimal Point) Package Dimension

Part Number		
HDSP-	E101	E103
	3351	3353
5082-	7651	7653
	7661	7663
	4601	4603

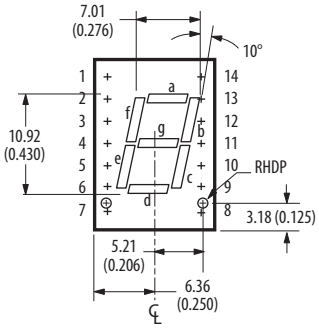

Part Number		
5802-	7650	
	7660	
	4600	

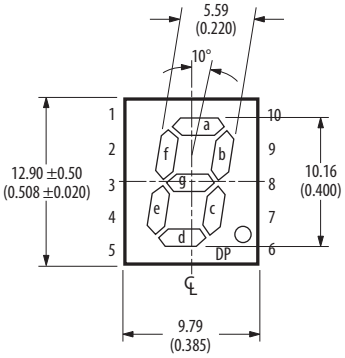

10.9 mm (0.43”) Overflow Displays Package Dimension

Part Number		
HDSP-	4606	
5082-	7656	7666

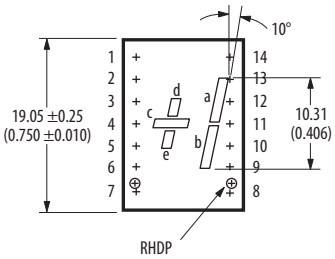

Part Number	
HDSP-	3356

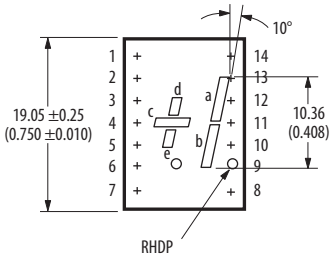

14.2 mm (0.56”) Single Digit Displays (Right Decimal Point) Package Dimension

Part Number		
HDSP-	H111	H211
	H411	H511
	H113	H213
	H413	H513
	H101	H103
	H401	H403
	5551	5553
	5501	5503
	5701	5703
	5601	5603

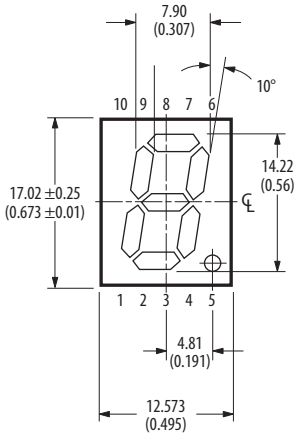

Note:
1. Dimensions in millimeters (inches).

Through-hole Seven-Segment Displays—Leadframe Platform

14.2 mm (0.56”) Overflow Displays (Right Decimal Point) Package Dimension

Part Number		
HDSP-	H107	H108
	H407	H408
	5557	5558
	5507	5508
	5707	5708
	5607	5608

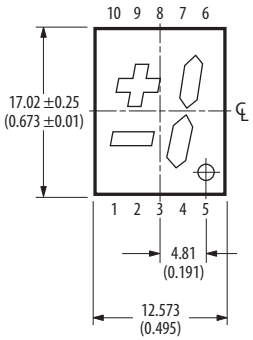

14.22 mm (0.56”) Single Digit Displays Package Dimension

Part Number		
HDSP-	51xE	51xG
	51xA	51xY

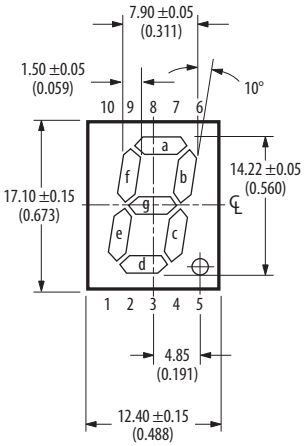

20 mm (0.8”) Single Digit Displays Package Dimension

Part Number		
HDSP-	3901	3903
	4201	4203
	8601	8603
	N101	N103
	N401	N403

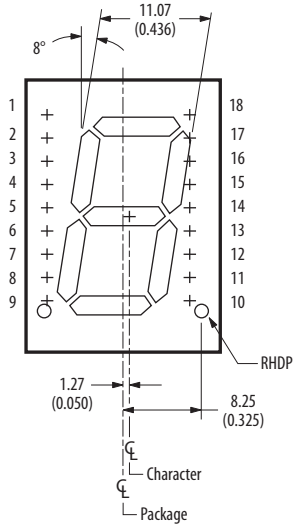

Part Number		
HDSP-		N105
	3900	3905
	4200	4205
	8600	8605

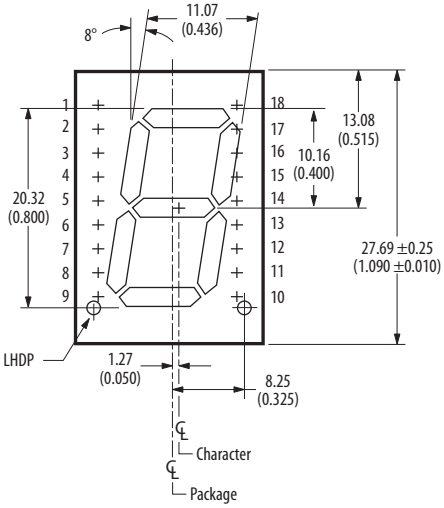

Through-hole Seven Segment Displays—PCB Platform

7.62 mm (0.3”) Single Digit Displays Package Dimension

Part Number	
HDSP-	333E
	333G
	333A

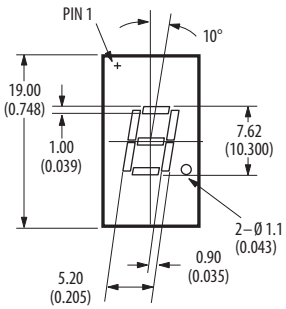

Note:
1. Dimensions in millimeters (inches).

Through-hole Seven-Segment Displays—PCB Platform

10 mm (0.4”) Slim Font Single Digit Displays (Right Decimal Point) Package Dimension

Part Number		
HDSP-	30xE	30xG
	30xA	30xY

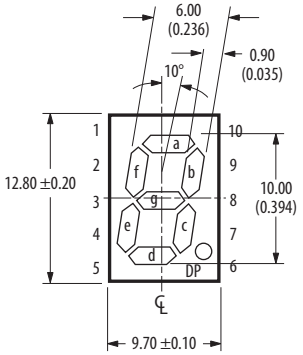

10.16 mm (0.4”) Dual Digit Displays Package Dimension

Part Number		
HDSP-	G0xE	G0xG
	G0xA	G0xY

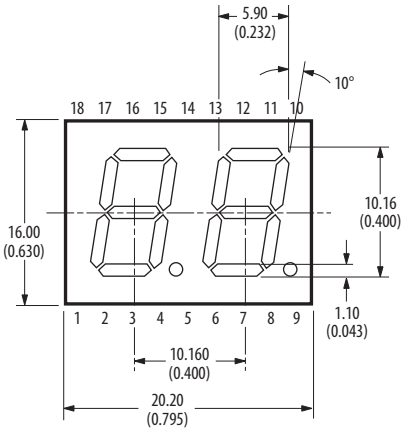

Through-hole Seven Segment Displays—PCB Platform

9.1mm (0.36”) Single Digit Displays Package Dimension

Part Number		
HDSP-	C3A1	
	C3A3	
	C3E1	
	C3E3	
	H3A1	
	H3A3	
	H3E1	
	H3E3	
	H3L1	
	H3L3	
	H3G1	H3G3

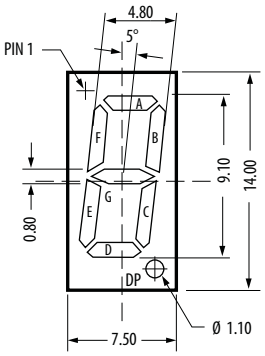

10.16 mm (0.4”) Single Digit Displays Package Dimension

Part Number	
HDSP-	311E
	311G
	311A
	311Y

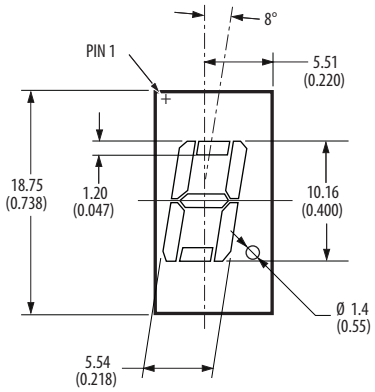

Part Number	
HDSP-	313E
	313G
	313A
	313Y

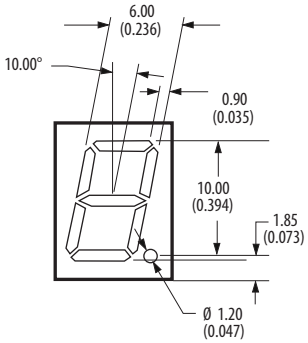

Note:
1. Dimensions in millimeters (inches).

Through-hole Seven Segment Displays—PCB Platform

13.1mm (0.52”) Single Digit Displays Package Dimension

Part Number	
HDSP-	C5A1
	C5A3
	H5A1
	H5A3
	H5E1
	H5E3
	H5L1
	H5L3
	H5G1
	H5G3

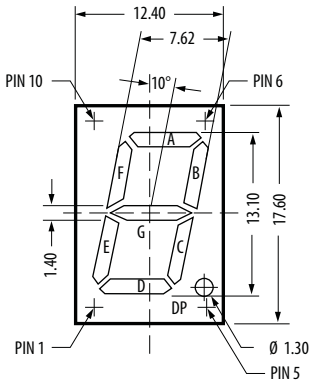

14.2 mm (0.56”) Dual Digit Displays Package Dimension

Part Number		
HDSP-	52xA	52xE
	52xG	52xY

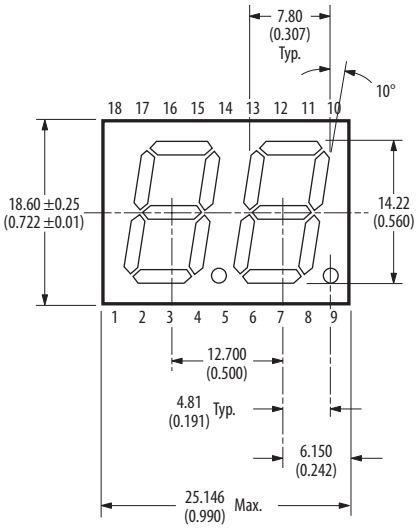

20 mm (0.8”) Single Digit Displays Package Dimension

Part Number		
HDSP-	81xE	81xG

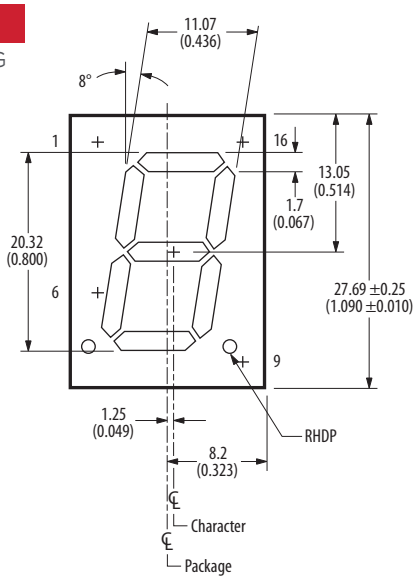

Part Number	
HDSP-	C8A1
	C8A3
	C8E1
	C8E3
	C8L1
	C8L3
	C8G1
	C8G3
	H8A1
	H8A3
	H8E1
	H8E3
	H8L1
	H8L3
	H8G1
	H8G3

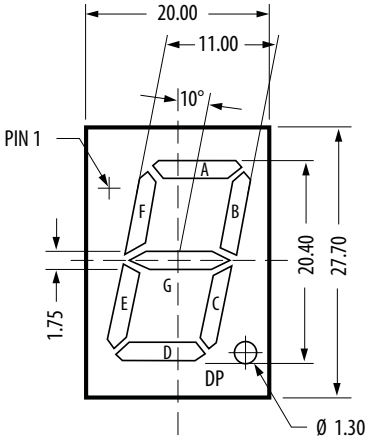

Note:
1. Dimensions in millimeters (inches).

Through-hole Seven Segment Displays—PCB Platform

25.4mm (1.0”) Single Digit Displays Package Dimension

Part Number	
HDSP-	H1A1
	H1A3
	H1E1
	H1E3
	H1G1
	H1G3

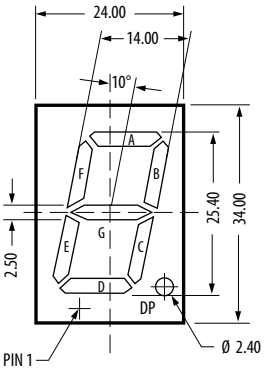

56.80mm (2.3”) Single Digit Displays Package Dimension

Part Number	
HDSP-	H2A1
	H2A3
	H2E1
	H2E3
	H2G1
	H2G3

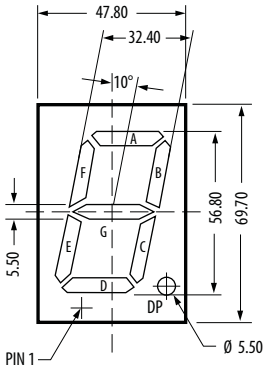

Note:
1. Dimensions in millimeters (inches).

Surface Mount Seven Segment Displays —PCB Platform

7.0mm (0.28”) Single Digit SMT Display Package Dimension

Part Number	
HDSM-	281C
	281B
	283B
	283C
	281H
	283H
	281F
	283F
	281L
	283L

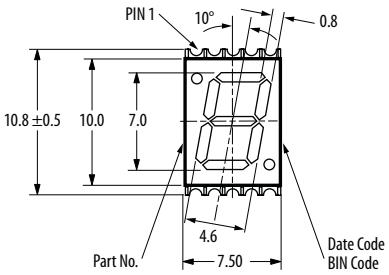

10.0mm (0.39”) Dual Digit SMT Display Package Dimension

Part Number	
HDSM-	441C
	441B
	443B
	441W
	443W
	443C
	441H
	443H
	441F
	443F
	441L
	443L

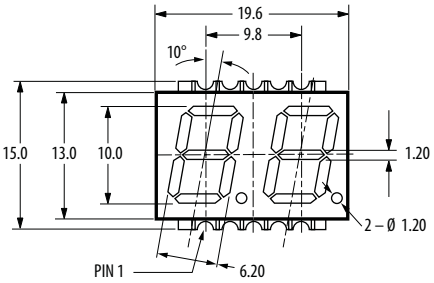

7.0mm (0.28”) Dual Digit SMT Display Package Dimension

Part Number	
HDSM-	291C
	291B
	293B
	293C
	291H
	293H
	291F
	293F
	291L
	293L

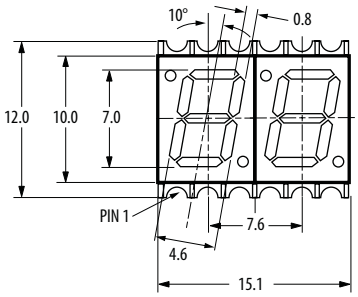

10mm (0.39”) Single Digit SMT Display Package Dimension

Part Number	
HDSM-	431C
	431B
	433B
	431W
	433W
	433C
	431H
	433H
	431F
	433F
	431L
	433L

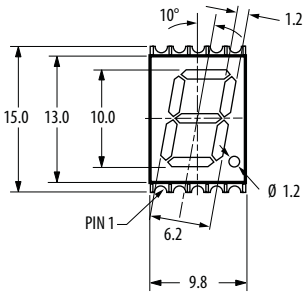

14.22mm (0.56”) Single Digit SMT Display Package Dimension

Part Number	
HDSM-	531C
	531B
	533B
	531W
	533W
	533C
	531H
	533H
	531F
	533F
	531L
	533L

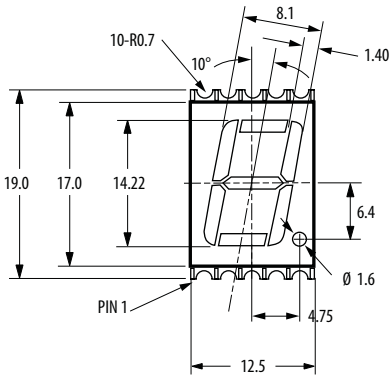

14.22mm (0.56”) Dual Digit SMT Display Package Dimension

Part Number	
HDSM-	541C
	541B
	543B
	541W
	543W
	543C
	541H
	543H
	541F
	543F
	541L
	543L

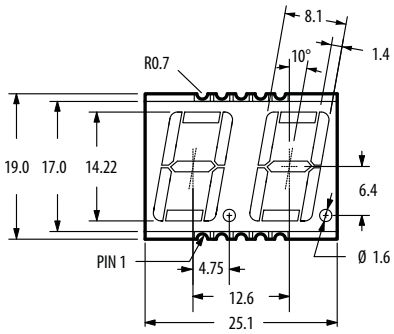

Note:
1. Dimensions in millimeters (inches).

Light Bars and Bar Graph Arrays

Description — Light Bars

Light Bars are Broadcom's innovative solution to fixed message annunciaton. They are used as annunciators that serve three customer functions: status indication, backlighting fixed messages and analog level indications (arrays). The Light Bars provide exceptional brightness at very low drive current for those applications where portability and battery backup are vital. These rectangular light sources are configured in single-inline and dual-in-line packages that contain either single or segmented light emitting areas. They are also X-Y stackable.

Benefits

- Large, bright, uniform light emitting surface
- Yellow and green categorized for dominant wavelength
- Low heat dissipation
- Choices of colors — Red, Green, Yellow
- Various package sizes are X-Y stackable
- Industry standard SIP and DIP packages

Applications

- Business machines
  - Point of sale bar code scanner
  - Electronic typewriters
  - Fax machines
  - Electronic scales
  - Postal meters
- Instrumentation
  - Process control system
  - Medical equipment
  - Machine control systems
  - Meters and status indicators
- Telecommunications
  - PBX systems
  - Modems

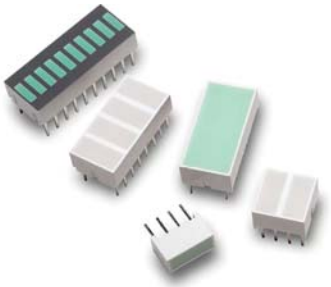

  - Central switching systems
  - Diagnostic equipment
  - Short wave radios
- Transportation
  - Automotive dashboards
  - Truck and bus controls
  - Airport passenger metal detectors
  - Ticket vending machines
- Consumer
  - Appliance front panel
  - Hi-Fi/stereo equipment
  - Alarm system

Description — 10-Element Bar Graph Arrays

Broadcom's 10-Element Bar Graph Arrays serve a market need for analog level indication. LED reliability, light emitting viewability make them suitable in place of mechanical meters. They are designed to display information in easily recognizable bar graph form. The packages are end stackable and are therefore capable of displaying long strings of information. The bar graph arrays are precision matched for both intensity and wavelength, saving you the time and trouble of matching individual parts. The prealigned bar graph elements locked in a single package eliminates the task of matching and aligning individual LEDs during manufacturing, along with the risk of visually substandard front panels resulting from misaligned indicators. Each device off ers easy-to-handle packages that are compatible with standard DIP sockets.

Benefits

- Exclusive package interlock
  - Facilitate end stackingalignment
- Large segment size
  - Wide viewing angle
- Available in Red, Green, Yellow and multicolor
- Wide variety of applications
- Categorized and packaged for luminous intensity
  - Greater uniformity of light output
- Matched LEDs for uniform appearance

Applications

- Instrumentation
  - Meters
  - Channel indicators
  - Status indicators
- Process control
  - Level indicators
- Appliances
  - Status of indication
  - Mode of operation
- Transportation
  - Tachometers
  - Fuel gauges
- Consumer products
  - VU meters (stereos)
  - Radio channel scanners
  - Burglar alarms

Light Bars

Shape	Size/# Light Emitting	Part Number	Color	Chip (nm) Typ.	Vf (V) Typ.	Vf (V) at If = mA	Iv at If = mA	Iv Typ. (mcd)
0.4SIP	0.35” x 0.15” 1 area	HLCP-A100	AlGaAs Red	637	1.8	20	3	7.5
0.4SIP	0.35” x 0.15” 1 area	HLMP-2300	GaP Red	626	2	20	20	23
0.4SIP	0.35” x 0.15” 1 area	HLMP-2400	GaP Yellow	585	2.1	20	20	20
0.4SIP	0.35” x 0.15” 1 area	HLMP-2500	GaP Green	572	2.2	20	20	25
0.8SIP	0.75” x 0.15” 1 area	HLCP-B100	AlGaAs Red	637	1.8	20	3	15
0.8SIP	0.75” x 0.15” 1 area	HLMP-2350	GaP Red	626	2	20	20	45
0.8SIP	0.75” x 0.15” 1 area	HLMP-2450	GaP Yellow	585	2.1	20	20	38
0.8SIP	0.75” x 0.15” 1 area	HLMP-2550	GaP Green	572	2.2	20	20	50
0.4DIP	0.35” x 0.35” 1 area	HLCP-C100	AlGaAs Red	637	1.8	20	3	15
0.4DIP	0.35” x 0.35” 1 area	HLMP-2655	GaP Red	626	2	20	20	45
0.4DIP	0.35” x 0.35” 1 area	HLMP-2755	GaP Yellow	585	2.1	20	20	38
0.4DIP	0.35” x 0.35” 1 area	HLMP-2855	GaP Green	572	2.2	20	20	50
0.4DIP	0.35” x 0.15” 2 areas	HLCP-D100	AlGaAs Red	637	1.8	20	3	7.5
0.4DIP	0.35” x 0.15” 2 areas	HLMP-2600	GaP Red	626	2	20	20	23
0.4DIP	0.35” x 0.15” 2 areas	HLMP-2700	GaP Yellow	585	2.1	20	20	20
0.4DIP	0.35” x 0.15” 2 areas	HLMP-2800	GaP Green	572	2.1	20	20	25
0.8DIP	0.35” x 0.15” 4 areas	HLCP-E100	AlGaAs Red	637	1.8	20	3	7.5
0.8DIP	0.35” x 0.15” 4 areas	HLMP-2620	GaP Red	626	2	20	20	23
0.8DIP	0.35” x 0.15” 4 areas	HLMP-2720	GaP Yellow	585	2.1	20	20	20
0.8DIP	0.35” x 0.15” 4 areas	HLMP-2820	GaP Green	572	2.2	20	20	25
0.8DIP	0.15” x 0.75” 2 areas	HLCP-F100	AlGaAs Red	637	1.8	20	3	15
0.8DIP	0.15” x 0.75” 2 areas	HLMP-2635	GaP Red	626	2	20	20	45
0.8DIP	0.15” x 0.75” 2 areas	HLMP-2735	GaP Yellow	585	2.1	20	20	38
0.8DIP	0.15” x 0.75” 2 areas	HLMP-2835	GaP Green	572	2.2	20	20	50
0.8DIP	0.35” x 0.35” 2 areas	HLCP-G100	AlGaAs Red	637	1.8	20	3	15
0.8DIP	0.35” x 0.35” 2 areas	HLMP-2670	GaP Red	626	2	20	20	45
0.8DIP	0.35” x 0.35” 2 areas	HLMP-2770	GaP Yellow	585	2.1	20	20	38
0.8DIP	0.35” x 0.35” 2 areas	HLMP-2870	GaP Green	572	2.2	20	20	50
0.8DIP	0.35” x 0.75” 1 areas	HLCP-H100	AlGaAs Red	637	1.8	20	3	30
0.8DIP	0.35” x 0.75” 1 areas	HLMP-2685	GaP Red	626	2	20	20	80
0.8DIP	0.35” x 0.75” 1 areas	HLMP-2785	GaP Yellow	585	2.1	20	20	70
0.8DIP	0.35” x 0.75” 1 areas	HLMP-2885	GaP Green	572	2.2	20	20	100

Bicolor Light Bars

Shape	Size/# Light Emitting	Part Number	Color	Chip (nm) Typ.	Vf (V) Typ.	Vf (V) at If = mA	Iv at If = mA	Iv Typ. (mcd)
0.4DIP	0.35" x 0.35" 1 area	HLMP-2950	GaP Red	626	2	20	20	45
			GaP Yellow	585	2.1	20	20	38
0.4DIP	0.35" x 0.35" 1 area	HLMP-2965	GaP Red	626	2	20	20	45
			GaP Green	572	2.2	20	20	50

Bar Graph Arrays

10 Element	HLCP-J100	AlGaAs Red	637	1.6	1	1	1000
	HDSP-4830	GaP Red	626	2.1	20	10	3500
	HDSP-4840	GaP Yellow	585	2.2	20	10	1900
	HDSP-4850	GaP Green	572	2.1	10	10	1900
Multicolor LA	HDSP-4832	GaP Red	626	2.1	20	10	3500
		GaP Yellow	585	2.2	20	10	1900
		GaP Green	572	2.1	10	10	1900
	HDSP-4836	GaP Red	626	2.1	20	10	3500
		GaP Yellow	585	2.2	20	10	1900
		GaP Green	572	2.1	10	10	1900
		GaP Yellow	585	2.2	20	10	1900
		GaP Red	626	2.1	20	10	3500

Luminous Intensity Categories

LED Light Bars

Bin ID	Customer Iv in mcd	
	Min.	Max.
AlGaAs Red HLCP-A100 / D100 / E100 GaP Red HLMP-2300 / 2600 / 2620		
B	4.5	8.2
C	6.8	12.1
D	10.1	18.5
E	15.3	27.8
F	22.8	45.5
AlGaAs Red HLCP-B100 / C100 / F100 / G100 GaP Red HLMP-2350 / 2635 / 2655 / 2670		
B	9.0	16.0
C	13.1	24.0
D	19.7	36.1
E	29.6	54.2
F	44.9	88.8
AlGaAs Red HLCP-H100 GaP Red HLMP-2685		
B	18.0	27.1
C	22.0	40.8
D	33.3	61.1
E	50.0	91.8
F	75.1	150.0

Bin ID	Customer Iv in mcd	
	Min.	Max.
GaP Yellow HLMP-2400 / 2700 / 2720		
E	13.8	25.3
F	20.7	41.4
HLMP-2450 / 2735 / 2755 / 2770		
E	27.0	50.0
F	40.5	81.0
HLMP-2785		
E	54.0	99.0
F	81.0	162.0
GaP Green HLMP-2500 / 2800 / 2820		
F	18.9	37.8
G	30.6	61.2
HLMP-2550 / 2835 / 2855 / 2870		
F	38.1	76.2
G	61.6	123.2
HLMP-2885		
F	75.1	150.3
G	121.1	242.2

Bicolor Light Bars

Bin ID	Customer Iv in mcd	
	Min.	Max.
HLMP-2950/GaP Red		
D	17.00	31.00
E	25.40	46.50
F	38.10	76.20
GaP Yellow		
D	18.00	33.00
E	27.00	50.00
F	40.50	81.00
HLMP-2965/GaP Red		
F	44.90	88.80
G	71.90	143.80
GaP Green		
F	38.10	76.20
G	61.60	123.20

Bar Graph Arrays

Bin ID	Customer Iv in mcd	
	Min.	Max.
AlGaAs Red/HLCP-J100 GaP Red/GaP Yellow/GaP Green HDSP-4830 / 4840 / 4850		
D	0.61	1.11
E	0.91	1.67
F	1.37	2.51
G	2.05	3.76
H	3.08	5.64
I	4.62	8.64

Package Drawings

HLCP-A100
HLMP-2300/2400/2500

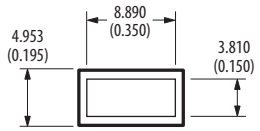

HLCP-B100
HLMP-2x50

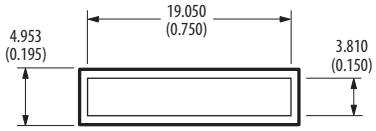

HLCP-C100
HLMP-2x55

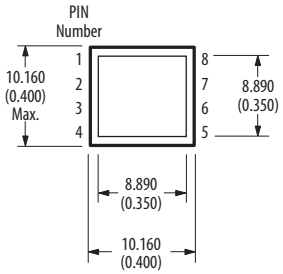

HLCP-D100
HLMP-2600/2700/2800

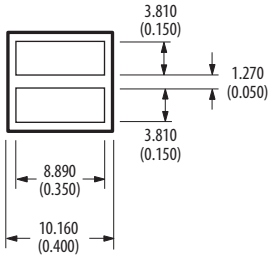

HLCP-E100
HLMP-2x20

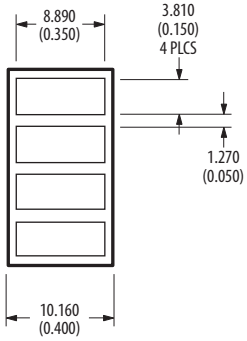

HLCP-F100
HLMP-2x35

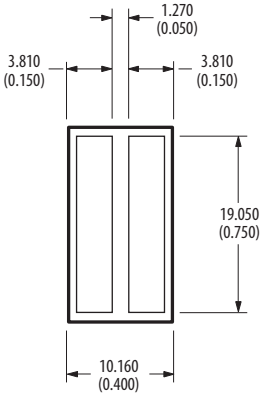

HLCP-G100
HLMP-2x70

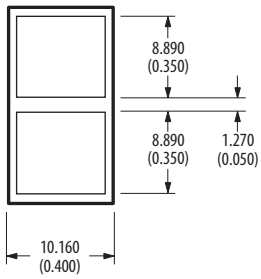

HLCP-H100
HLMP-2x85

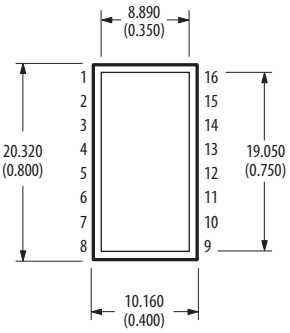

HLCP-J100
HDSP-48x0

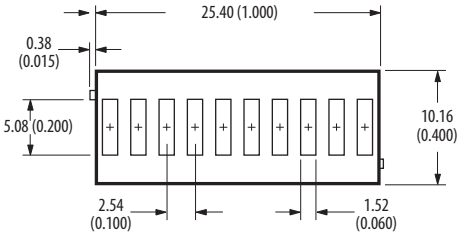

Note:
1. Dimensions in millimeters (inches).

Smart Displays

Description

Broadcom off ers high quality Smart Displays to meet a wide range of applications and requirements. The Smart Displays are available in both serial and parallel interface and have an ASIC driver that greatly simplifi es design eff orts. The Smart Displays are LED technology-based and are extremely reliable with a long life expectancy. They are resistant to extreme weather conditions, and to mechanical vibration and shock, making them suitable for industrial applications where maintenance resources are scarce. They are also suitable for the consumer market where the need for aesthetics and product diff erentiation provides a competitive advantage to our customers' end products. Broadcoms' Smart Display products are positioned to support high volume and cost-effective solutions.

Benefits

- Robust design for high reliability, longer life and hot and cold temperature operating capability
  - Ideally suited for outdoor, industrial and automotive applications
- Alphanumeric characters and custom icons for messaging
  - Useful for conveying operating modes, status, warning and error codes
- Ability to flash or blink
  - Catch user's attention
- ASIC LED driver
  - Simplified design interfacing reduces design cycle time
- Emissive display with brightness control
  - Ability to modify brightness for subdued light environment and total darkness
- Aesthetically pleasing
  - Distinctive display allows product differentiation

Applications

- Industrial Equipment
  - Industrial ovens, reliability test equipment, analytical instruments, process control equipment, test and measuring instruments, temperature controllers, programmable logic controllers, security systems
- Networking
  - Telecommunication equipment, answering machines, telephones, base stations, PBX modems, network cards
- Outdoor Signs
  - Petrol pump meters
- Consumer
  - Audio/video equipment, audio mixers, set top boxes, amplifi ers, musical instruments, gaming machines, currency/coin counters, security systems
- Consumer "White Goods"
  - Displays for washing machine digital panels, cookers, freezers and dishwashers
- Medical Equipment
  - Hospital monitoring systems
- Transportation
  - Displays, radar detectors, avionics displays
- Computers and Peripherals
  - CPU speed indicator, printer front panels, fax machines, copy machines, power supply equipment, cash registers

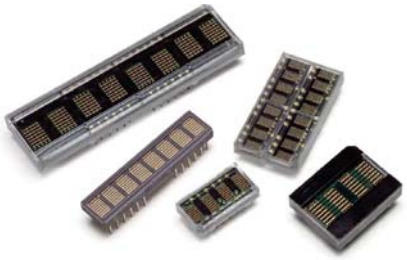

Plastic Package, Serial Interface, 5 x 7 Dot Matrix Display with Custom Font Programmable

Part Number	Character	Color	Interface	Character Height (mm)	Luminous Intensity Typ. (µcd)	Supply, Typ. (mA)
HCMS-2901	4	Yellow	Serial	3.7	180	132
HCMS-2902	4	Red	Serial	3.7	270	132
HCMS-2903	4	Green	Serial	3.7	270	132
HCMS-2904	4	Orange	Serial	3.7	180	132
HCMS-2905	4	Deep Red	Serial	3.7	590	145
HCMS-2911	8	Yellow	Serial	3.7	180	264
HCMS-2912	8	Red	Serial	3.7	270	264
HCMS-2913	8	Green	Serial	3.7	270	264
HCMS-2914	8	Orange	Serial	3.7	180	264
HCMS-2915	8	Deep Red	Serial	3.7	590	290
HCMS-2819	8	Blue	Serial	3.7	170	264
HCMS-2921	16	Yellow	Serial	3.7	180	528
HCMS-2922	16	Red	Serial	3.7	270	528
HCMS-2923	16	Green	Serial	3.7	270	528
HCMS-2924	16	Orange	Serial	3.7	180	528
HCMS-2925	16	Deep Red	Serial	3.7	590	580
HCMS-2961	4	Yellow	Serial	4.6	180	132
HCMS-2962	4	Red	Serial	4.6	270	132
HCMS-2963	4	Green	Serial	4.6	270	132
HCMS-2964	4	Orange	Serial	4.6	180	132
HCMS-2965	4	Deep Red	Serial	4.6	590	145
HCMS-2971	8	Yellow	Serial	4.6	180	264
HCMS-2972	8	Red	Serial	4.6	270	264
HCMS-2973	8	Green	Serial	4.6	270	264
HCMS-2974	8	Orange	Serial	4.6	180	264
HCMS-2975	8	Deep Red	Serial	4.6	590	290
HCMS-3901	4	Yellow	Serial	3.7	148	132
HCMS-3902	4	Red	Serial	3.7	64	132
HCMS-3903	4	Green	Serial	3.7	252	132
HCMS-3904	4	Orange	Serial	3.7	64	132
HCMS-3906	4	Red	Serial	3.7	1150	132
HCMS-3907	4	Green	Serial	3.7	500	132
HCMS-3911	8	Yellow	Serial	3.7	148	264
HCMS-3912	8	Red	Serial	3.7	64	264
HCMS-3913	8	Green	Serial	3.7	252	264
HCMS-3914	8	Orange	Serial	3.7	64	264
HCMS-3916	8	Red	Serial	3.7	1150	264
HCMS-3917	8	Green	Serial	3.7	500	264
HCMS-3961	4	Yellow	Serial	4.6	148	132
HCMS-3962	4	Red	Serial	4.6	64	132
HCMS-3963	4	Green	Serial	4.6	252	132
HCMS-3964	4	Orange	Serial	4.6	64	132
HCMS-3966	4	Red	Serial	4.6	1150	132
HCMS-3967	4	Green	Serial	4.6	500	132
HCMS-3971	8	Yellow	Serial	4.6	148	264
HCMS-3972	8	Red	Serial	4.6	64	264
HCMS-3973	8	Green	Serial	4.6	252	264
HCMS-3974	8	Orange	Serial	4.6	64	264
HCMS-3976	8	Red	Serial	4.6	1150	264
HCMS-3977	8	Green	Serial	4.6	500	264

Notes:
Typical values at T_A = 25°C.
Luminous intensity for one pixel at V_{LED} = 5.0 V, 50% peak pixel current, 100% pulse width.
Supply current at V_{LED} = 5.0V, 100% peak pixel current, 100% pulse width, 20 pixels per digit at all digit locations.

Plastic Package, Serial Interface, 5 x 7 Dot Matrix Display with Custom Font Programmable

Part Number	Character	Color	Interface	Character Height (mm)	Luminous Intensity Typ. (µcd)	Supply, Typ. (mA)
HDLY-1414	4	Yellow	Parallel	3.6	3.7	110
HDLO-1414	4	Red	Parallel	3.6	3.5	110
HDLG-1414	4	Green	Parallel	3.6	5.6	110
HDLA-1414	4	Orange	Parallel	3.6	3.5	110
HDLU-1414	4	Deep Red	Parallel	3.6	3.1	34
HDLS-1414	4	Deep Red	Parallel	3.6	12.7	125
HDLY-2416	4	Yellow	Parallel	5.1	3.7	110
HDLO-2416	4	Red	Parallel	5.1	3.5	110
HDLG-2416	4	Green	Parallel	5.1	5.6	110
HDLA-2416	4	Orange	Parallel	5.1	3.5	110
HDLU-2416	4	Deep Red	Parallel	5.1	3.1	34
HDLS-2416	4	Deep Red	Parallel	5.1	12.7	125
HDLY-3416	4	Yellow	Parallel	6.9	3.7	110
HDLO-3416	4	Red	Parallel	6.9	3.5	110
HDLG-3416	4	Green	Parallel	6.9	5.6	110
HDLA-3416	4	Orange	Parallel	6.9	3.5	110

Plastic Package, Parallel Interface, 8 Character, 5 x 7 Dot Matrix Display with 128 Character ASCII Decoder

Part Number	Character	Color	Interface	Character Height (mm)	Luminous Intensity Typ. (µcd)	Supply, Typ. (mA)
HDSP-2530	8	Orange	Parallel	4.6	7.5	300
HDSP-2531	8	Yellow	Parallel	4.6	7.	300
HDSP-2532	8	Red	Parallel	4.6	7.5	300
HDSP-2533	8	Green	Parallel	4.6	7.5	300
HDSP-2534	8	Deep Red	Parallel	4.6	15	330
HDSP-2110	8	Orange	Parallel	4.8	7.5	300
HDSP-2111	8	Yellow	Parallel	4.8	7.5	300
HDSP-2112	8	Red	Parallel	4.8	7.5	300
HDSP-2113	8	Green	Parallel	4.8	7.5	300
HDSP-2107	8	Deep Red	Parallel	4.8	15	330
HDSP-2500	8	Orange	Parallel	7.0	7.5	300
HDSP-2501	8	Yellow	Parallel	7.0	7.5	300
HDSP-2502	8	Red	Parallel	7.0	7.5	300
HDSP-2503	8	Green	Parallel	7.0	7.5	300
HDSP-2504	8	Deep Red	Parallel	7.0	1.5	330

Notes:
Typical values at V_{DD} = 5.0V, T_A = 25°C.
Luminous intensity at 100% full brightness, character average with "#" (20 pixels) displayed.
Supply current at 100% brightness, with all character locations displaying "#" (20 pixels).

Glass/Ceramic Package, Parallel Interface, 8 Character, 5 x 7 Dot Matrix with 128 Character ASCII Decoder

Part Number	Character	Color	Interface	Character Height (mm)	Luminous Intensity Typ. (µcd)	Supply Current Typ. (mA)
HDSP-2131	8	Yellow	Parallel	4.8	7.5	300
HDSP-2132	8	Red	Parallel	4.8	7.5	300
HDSP-2133	8	Green	Parallel	4.8	7.5	300
HDSP-2179	8	Orange	Parallel	4.8	7.5	300

Notes:
Typical values at V_{DD} = 5.0V, T_A = 25°C.
Luminous intensity at 100% full brightness, character average with "#" (20 pixels) displayed.
Supply current at 100% brightness, with all character locations displaying "#" (20 pixels).

Glass/Ceramic Package, 4 x 7 Hexadecimal Display with Built-in BCD Decoder/Driver

Part Number	Description/ Decimal Point	Color	Operation Temperature (°C)	Character Height (mm)	Luminous Intensity Typ. (µcd)	Supply Current Typ. (mA)
HDSP-0760	Numeric, RHDP	HER	-55 to 85	7.4	140	78
HDSP-0761	Numeric, LHDP	HER	-55 to 85	7.4	140	78
HDSP-0762	Hexadecimal	HER	-55 to 85	7.4	140	78
HDSP-0770	Numeric, RHDP	HER	-55 to 85	7.4	620	120
HDSP-0771	Numeric, LHDP	HER	-55 to 85	7.4	620	120
HDSP-0772	Hexadecimal	HER	-55 to 85	7.4	620	120
HDSP-0781	Numeric, RHDP	HER	-55 to 100	7.4	140	78
HDSP-0782	Numeric, LHDPi	HER	-55 to 100	7.4	140	78
HDSP-0784	Hexadecimal	HER	-55 to 100	7.4	140	78
HDSP-0791	Numeric, RHDP	HER	-55 to 100	7.4	620	120
HDSP-0792	Numeric, LHDP	HER	-55 to 100	7.4	620	120
HDSP-0794	Hexadecimal	HER	-55 to 100	7.4	620	120
HDSP-0860	Numeric, RHDP	Yellow	-55 to 85	7.4	490	120
HDSP-0861	Numeric, LHDP	Yellow	-55 to 85	7.4	490	120
HDSP-0862	Hexadecimal	Yellow	-55 to 85	7.4	490	120
HDSP-0881	Numeric, RHDP	Yellow	-55 to 100	7.4	490	120
HDSP-0884	Hexadecimal	Yellow	-55 to 100	7.4	490	120
HDSP-0960	Numeric, RHDP	Green	-55 to 85	7.4	1100	120
HDSP-0961	Numeric, LHDP	Green	-55 to 85	7.4	1100	120
HDSP-0962	Hexadecimal	Green	-55 to 85	7.4	1100	120
HDSP-0981	Numeric, RHDP	Green	-55 to 100	7.4	1100	120
HDSP-0984	Hexadecimal	Green	-55 to 100	7.4	1100	120

Notes:
Typical values at V_{DD} = 5.0V, T_A = 25°C.
Luminous intensity per LED (Digit Average).
Supply current with "5" or "B" character displayed.

Glass/Ceramic Package Over Range ± with Built-in BCD Decoder/Driver

Part Number	Description/ Decimal Point	Color	Operation Temperature (°C)	Character Height (mm)	Luminous Intensity Typ. (µcd)	Supply Current Typ. (mA)
HDSP-0763	Overange ± 1	HER	-55 to 85	7.4	140	11.2
HDSP-0863	Overange ± 1	Yellow	-55 to 85	7.4	490	32
HDSP-0963	Overange ± 1	Green	-55 to 85	7.4	1100	32
HDPS-0783	Overage ± 1	HER	-55 to 100	7.4	140	11.2
HDPS-0883	Overage ± 1	Yellow	-55 to 100	7.4	490	32
HPDS-0983	Overage ± 1	Green	-55 to 100	7.4	1100	32

Notes:
Typical values at V_{DD} = 5.0V, T_A = 25°C.
Luminous intensity per LED (Digit Average).

Glass/Ceramic Package, Serial Interface, 4 character, 5 x 7 Dot Matrix with 128 Character ASCII Decoder

Part Number	Character	Color	Interface	Character Height (mm)	Luminous Intensity Typ. (µcd)	Supply Current Typ. (mA)
HCMS-2351	4	Yellow	Serial	4.9	3400	6.2
HCMS-2353	4	Green	Serial	4.9	3000	6.2

Notes:
Typical values at V_{DD} = 5.0V, T_A = 25°C.
Luminous intensity (peak) per LED (Digit Average).

Package Drawings

HCMS-290x/HCMS-390x

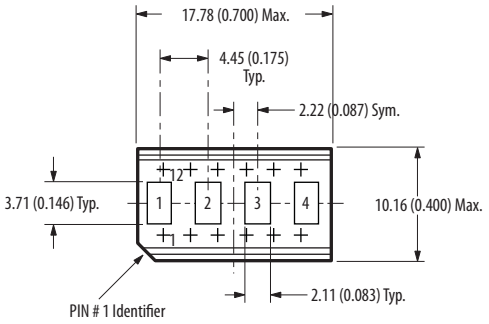

HCMS-291x/HCMS-391x

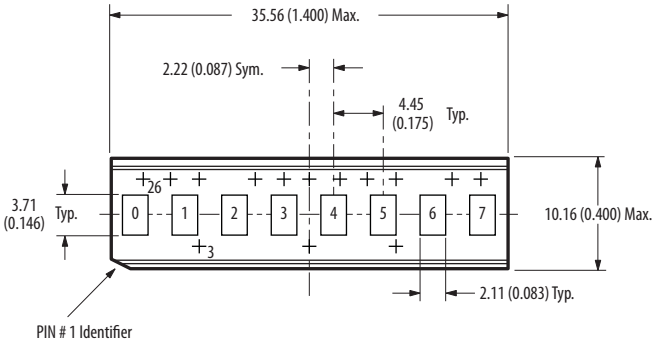

HCMS-296x/HCMS-396x

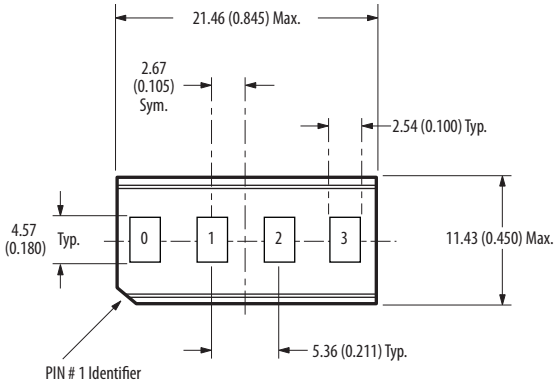

HCMS-297x/HCMS-397x

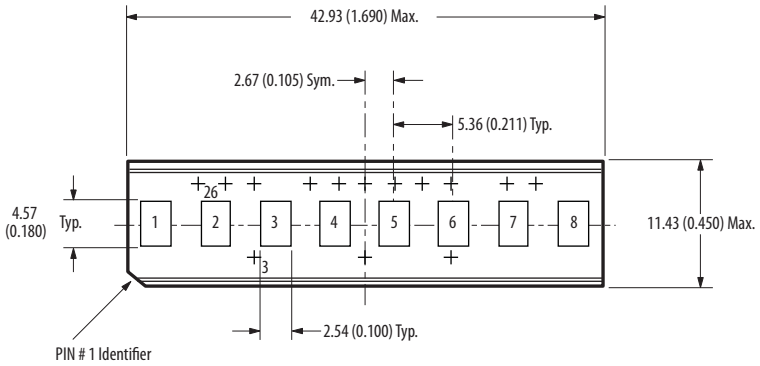

HCMS-292x

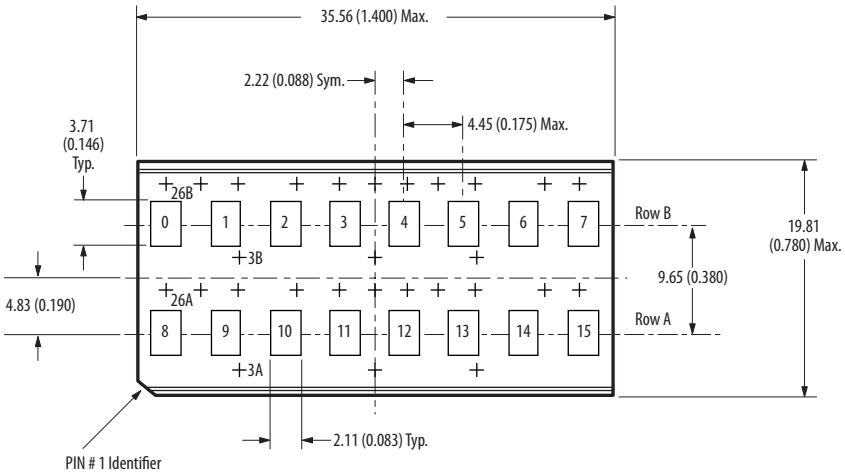

Note:
1. Dimensions in millimeters (inches).

HDSP-253x

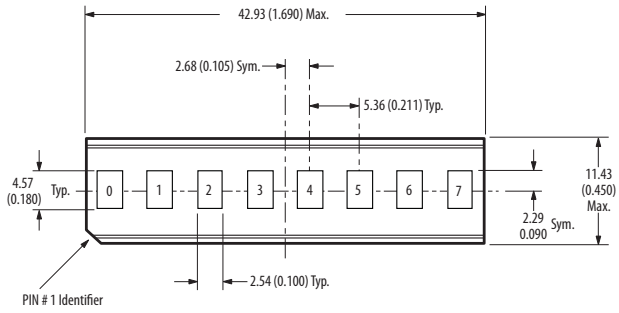

HDSP-2107, -211x

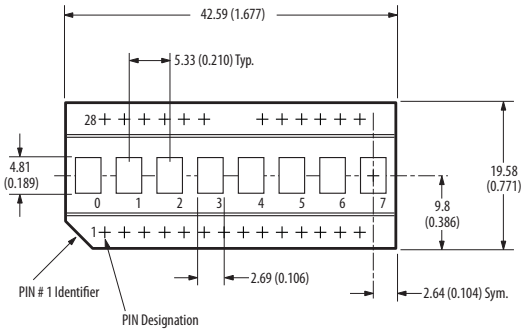

HDSP-250x

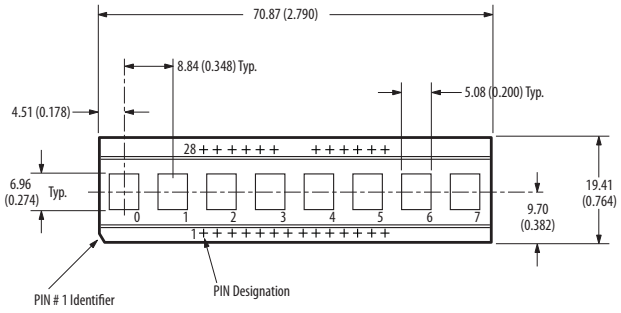

HDLx-2416

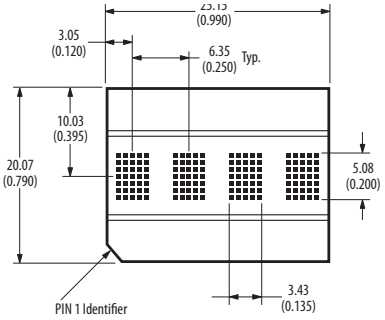

HDSP-213x, -2179

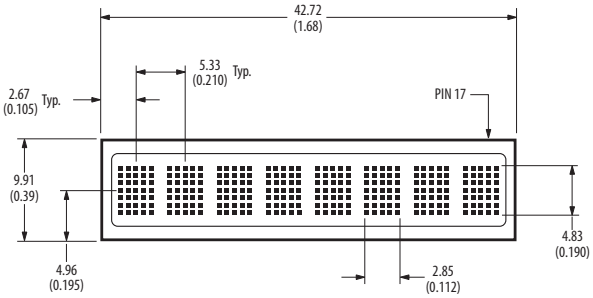

HDLx-1414

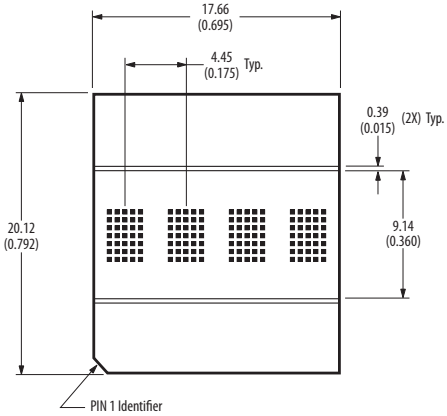

Notes:
1. Dimensions in millimeters (inches).
2. Digit ceter line is ±0.38MM (±0.015 inch) from package center line.
3. Unless otherwise specified, the tolerance on all dimensions is ±0.38MM (±0.015 inch).

Package Drawings

HDLx-3416

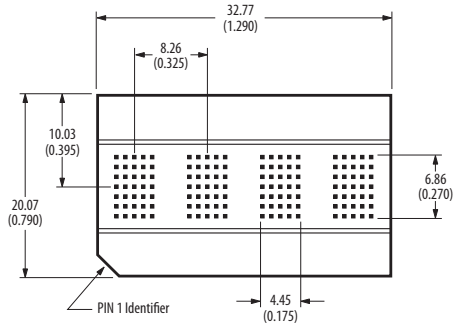

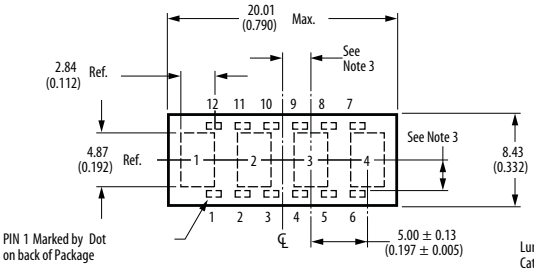

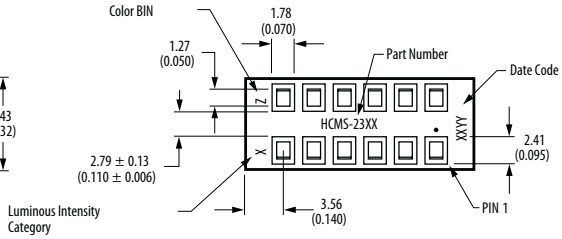

Note:
1. Dimensions in millimeters (inches).

HDSP-0x81, HDSP-0791,HDSP-0x60, HDSP-0770

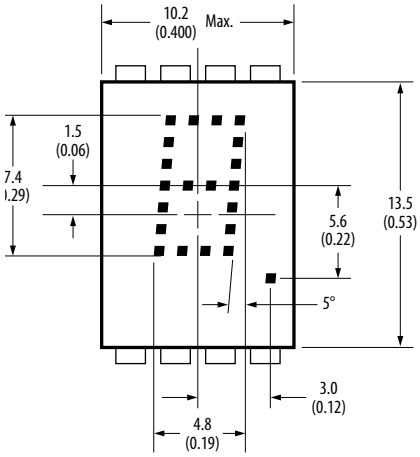

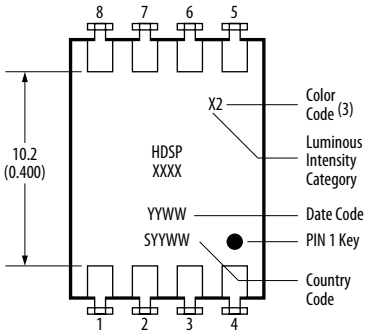

HDSP-0x82, HDPS-0792, HDSP-0x61, HDPS-0771

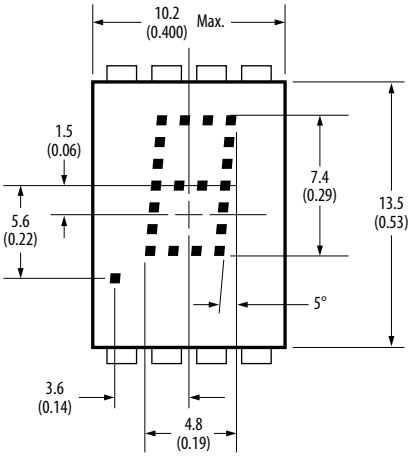

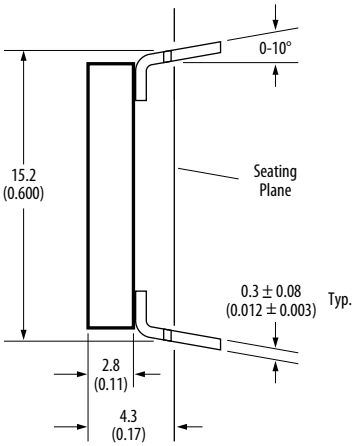

HDSP-0x84, HDSP-0794, HDSP-0x63

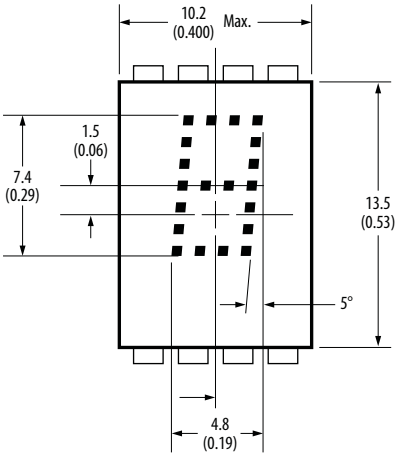

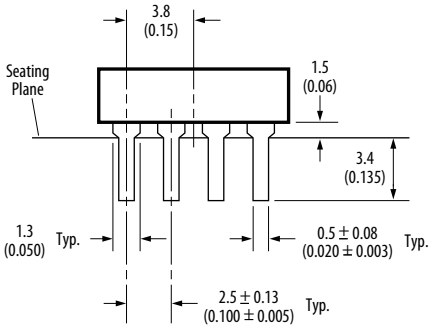

HDSP-0x83, HDSP-0x62, 0772

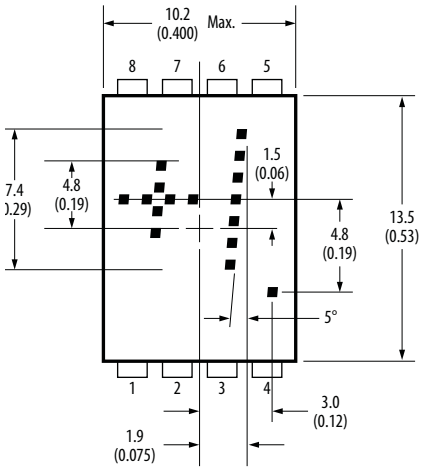

Notes:
1. Dimensions in millimeters (inches).
2. Digit ceter line is ±0.38MM (±0.015 inch) from package center line.
3. Unless otherwise specified, the tolerance on all dimensions is ±0.38MM (±0.015 inch).

Connecting everything®

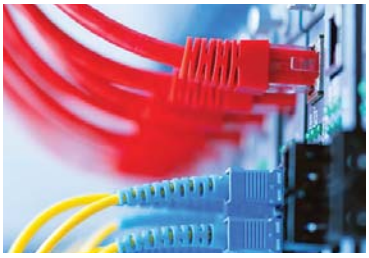

Broadcom Limited is a diversified global semiconductor leader built on 50 years of innovation, collaboration and engineering excellence.

Broadcom's extensive product portfolio serves multiple applications within four primary end markets: wired infrastructure, wireless communications, enterprise storage and industrial & others. Applications for our products in these end markets include: data center networking, home connectivity, broadband access, telecommunications equipment, smartphones and base stations, data center servers and storage, factory automation, power generation and alternative energy systems, and displays.

Broadcom combines global scale, engineering depth, broad product portfolio diversity and superior execution and operational focus to deliver category-leading connectivity products so its customers can build and grow successful businesses today and in the future.

BROADCOM®
connecting everything®

Visit the Broadcom storage website at: broadcom.com

Broadcom, the pulse logo, connecting everything, and Moonstone are among the trademarks of Broadcom. Copyright © 2017 Broadcom. All Rights Reserved. The term "Broadcom" refers to Broadcom Limited and/or its subsidiaries. For more information, please visit **www.broadcom.com.**
AV00-0244EN 07.27.17