LF347

Quad Operational Amplifier (JFET)

Features

- Low input bias current
- High input impedance
- Wide gain bandwidth: 4 MHz Typ.
- High slew rate: 13 V/μs Typ.

Description

The LF347 is a high speed quad JFET input operational amplifier. This feature high input impedance, wide bandwidth, high slew rate, and low input offset voltage and bias current. LF347 may be used in circuits requiring high input impedance. High slew rate and wide bandwidth, low input bias current.

14-DIP



14-SOP



Internal Block Diagram

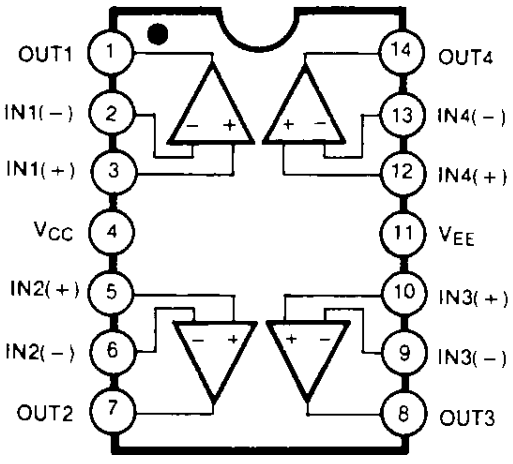

Rev. 1.0.0

©2001 Fairchild Semiconductor Corporation

Schematic Diagram

(One Section Only)

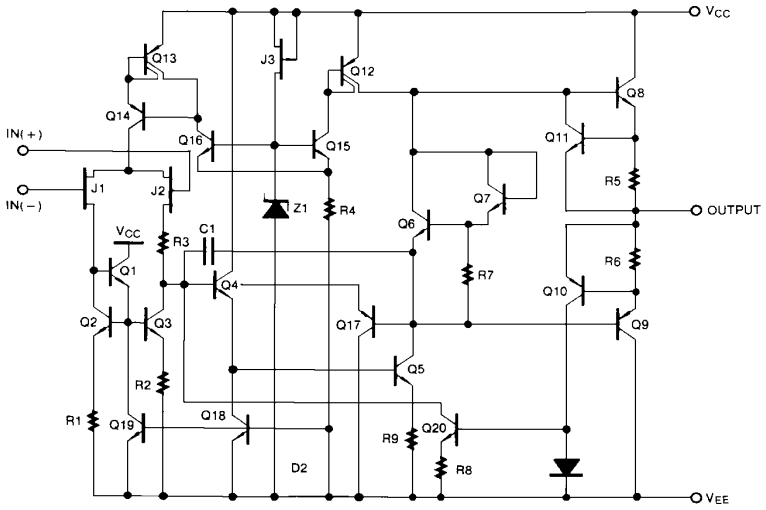

Absolute Maximum Ratings

Parameter	Symbol	Value	Unit
Supply Voltage	V_{CC}	±18	V
Differential Input Voltage	$V_{I(DIFF)}$	30	V
Input Voltage Range	V_I	±15	V
Output Short Circuit Duration	-	Continuous	-
Power Dissipation	P_D	570	mW
Operating Temperature Range	T_{OPR}	0 ~ + 70	°C
Storage Temperature Range	T_{STG}	-65 ~ + 150	°C

Electrical Characteristics

(V_{CC}= +15V, V_{EE}= -15V, T_A=25 °C, unless otherwise specified)

Parameter	Symbol	Conditions		LF347			Unit
				Min.	Typ.	Max.	
Input Offset Voltage	V_{IO}	R_S = 10KΩ		-	5	10	mV
			Note 1	-	-	13	
Input Offset Voltage Drift(Note2)	$\Delta V_{IO}/\Delta T$	R_S = 10KΩ		-	10	-	μV/ °C
Input Offset Current	I_{IO}			-	25	100	pA
			Note 1	-	-	4	nA
Input Bias Current	I_{BIAS}			-	50	200	pA
			Note 1	-	-	8	nA
Large Signal Voltage Gain	G_V	R_L = 2KΩ		25	100	-	V/mV
		$V_{O(P-P)}$= ±10V	Note 1	15	-	-	
Output Voltage Swing	$V_{O(PP)}$	R_L = 10KΩ		±12	±13.5	-	V
Input Voltage Range	$V_{I(R)}$	-		±11	+15 -12	-	V
Common-Mode Rejection Ratio	CMRR	$R_S \leq$ 10KΩ		80	100	-	dB
Power Supply Rejection Ratio	PSRR	$R_S \leq$ 10KΩ		80	100	-	dB
Input Resistance	R_I	-		-	10^{12}	-	Ω
Supply Current	I_{CC}	-		-	7.2	11	mA
Slew Rate	SR	-		-	13	-	V/μS
Gain Bandwidth Product(Note2)	GBW	-		-	4	-	MHz
Channel Seperation	CS	f = 1Hz ~ 20Khz (input referenced)		-	120	-	dB
Equivalent Input Noise Voltage	e_N	R_S = 100Ω f = 1KHz		-	20	-	nV/$\sqrt{Hz}$
Equivalent Input Noise Current	I_N	f = 1KHz		-	0.01	-	pA/$\sqrt{Hz}$

Note :

1. LF347 : 0≤T_A≤+70 °C
2. Guaranteed by design

Mechanical Dimensions

Package

Dimensions in millimeters

14-DIP

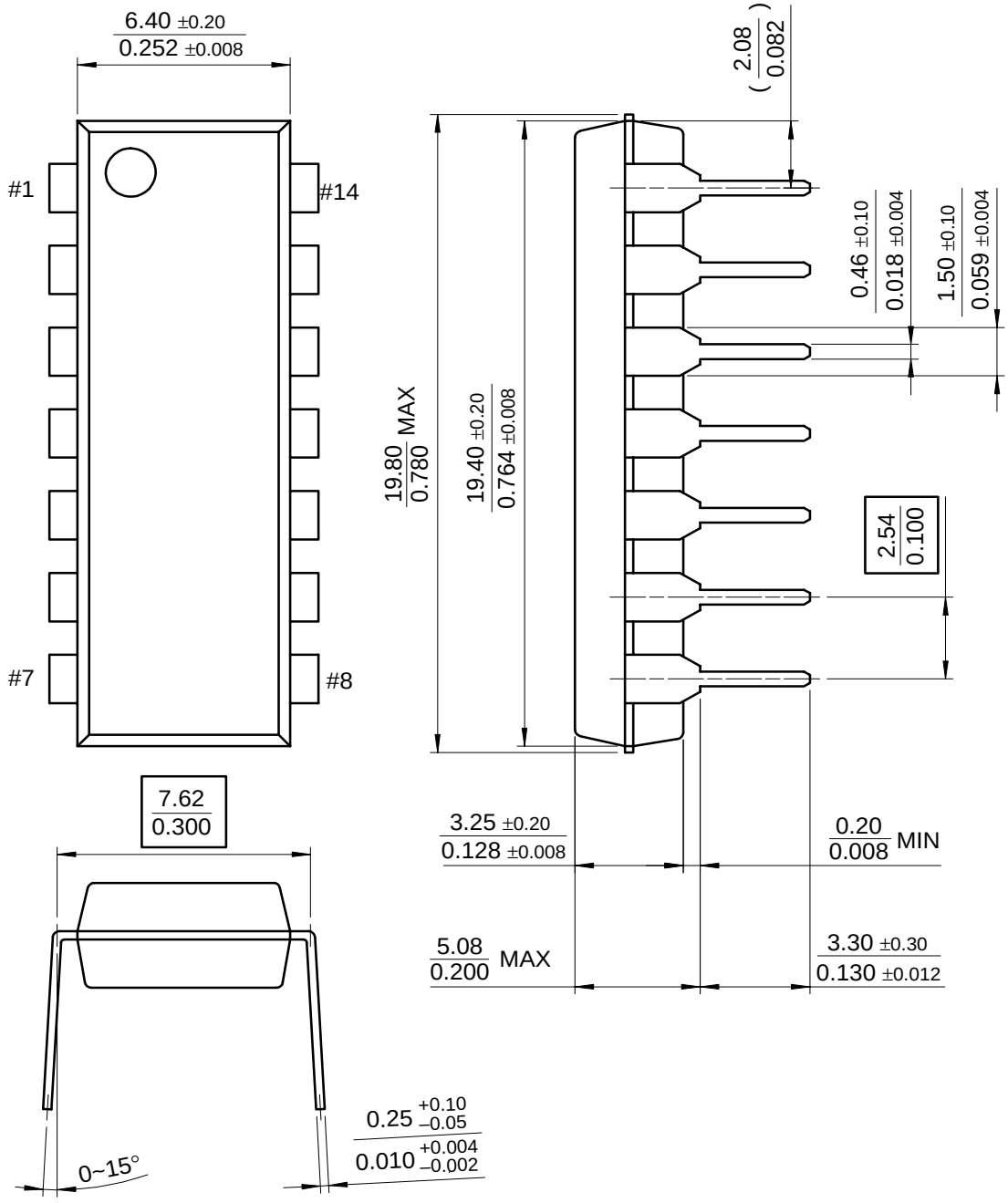

Mechanical Dimensions (Continued)

Package

Dimensions in millimeters

14-SOP

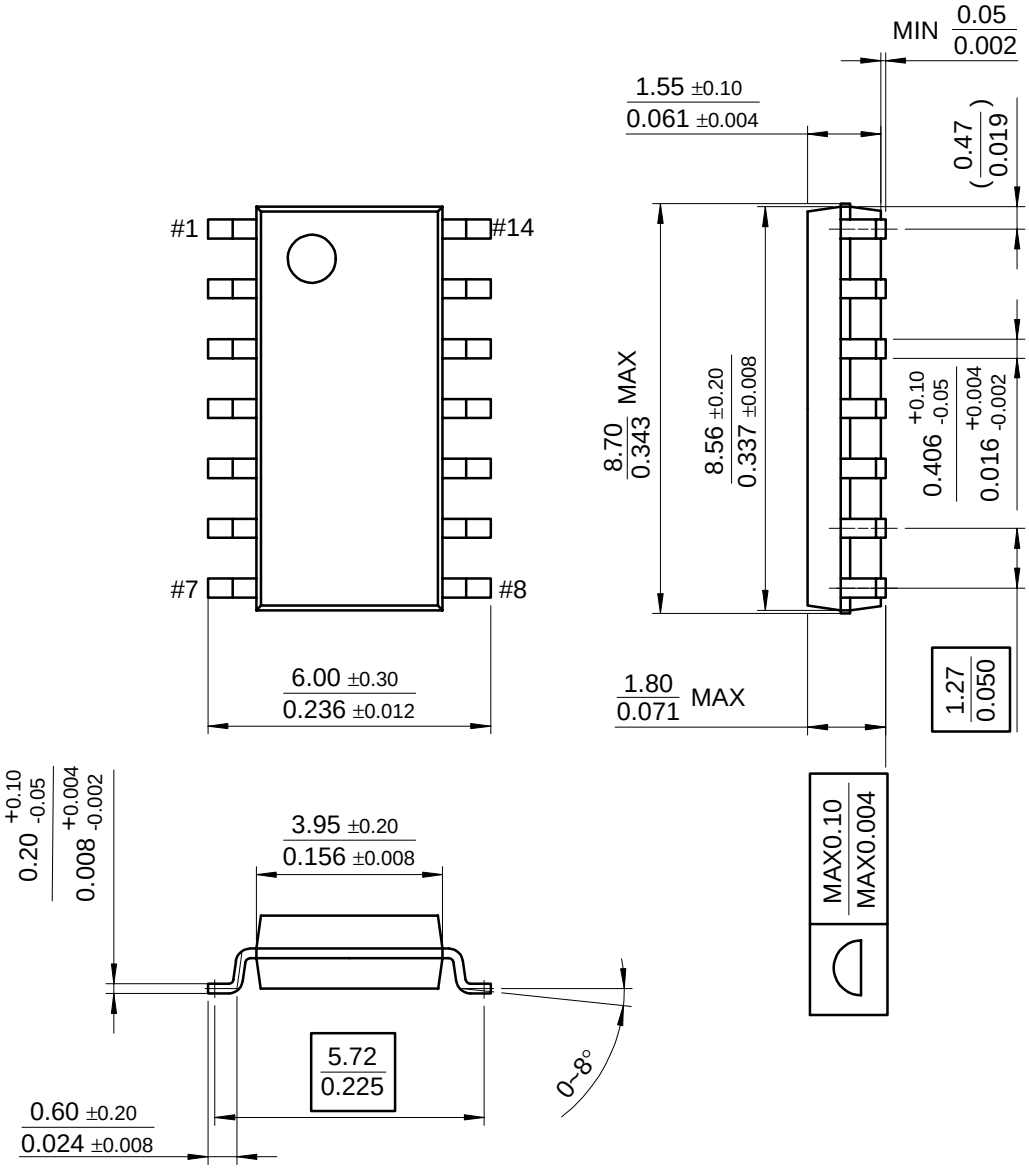

Ordering Information

Product Number	Package	Operating Temperature
LF347N	14-DIP	0 ~ + 70°C
LF347M	14-SOP	

DISCLAIMER

FAIRCHILD SEMICONDUCTOR RESERVES THE RIGHT TO MAKE CHANGES WITHOUT FURTHER NOTICE TO ANY PRODUCTS HEREIN TO IMPROVE RELIABILITY, FUNCTION OR DESIGN. FAIRCHILD DOES NOT ASSUME ANY LIABILITY ARISING OUT OF THE APPLICATION OR USE OF ANY PRODUCT OR CIRCUIT DESCRIBED HEREIN; NEITHER DOES IT CONVEY ANY LICENSE UNDER ITS PATENT RIGHTS, NOR THE RIGHTS OF OTHERS.

LIFE SUPPORT POLICY

FAIRCHILD'S PRODUCTS ARE NOT AUTHORIZED FOR USE AS CRITICAL COMPONENTS IN LIFE SUPPORT DEVICES OR SYSTEMS WITHOUT THE EXPRESS WRITTEN APPROVAL OF THE PRESIDENT OF FAIRCHILD SEMICONDUCTOR CORPORATION. As used herein:

1. Life support devices or systems are devices or systems which, (a) are intended for surgical implant into the body, or (b) support or sustain life, and (c) whose failure to perform when properly used in accordance with instructions for use provided in the labeling, can be reasonably expected to result in a significant injury of the user.
2. A critical component in any component of a life support device or system whose failure to perform can be reasonably expected to cause the failure of the life support device or system, or to affect its safety or effectiveness.

© 2001 Fairchild Semiconductor Corporation