Advanced Low Power 5V RS232 Drivers/Receivers with Small Capacitors

FEATURES

- ESD Protection over ±**10kV** (±15kV IEC-1000-4-2 for LT1133A, LT1137A and LT1141A)
- Uses Small Capacitors: 0.1µF, 0.2µF
- 1µA Supply Current in SHUTDOWN
- 120kBaud Operation for R_L = 3k, C_L = 2500pF
- 250kBaud Operation for R_L = 3k, C_L = 1000pF
- CMOS Comparable Low Power
- Easy PC Layout: Flowthrough Architecture
- Rugged Bipolar Design: Absolutely No Latchup
- Outputs Assume a High Impedance State When Off or Powered Down
- Improved Protection: RS232 I/O Lines Can Be Forced to ±30V Without Damage
- Output Overvoltage Does Not Force Current Back into Supplies
- Available in SO and SSOP Packages

DESCRIPTION

The LT®1130A/LT1140A series of RS232 drivers/receivers features special bipolar construction techniques which protect the drivers and receivers beyond the fault conditions stipulated for RS232. Driver outputs and receiver inputs can be shorted to ±30V without damaging the device or the power supply generator. In addition, the RS232 I/O pins are resilient to multiple ±10kV ESD strikes. An advanced driver output stage operates up to 250kbaud while driving heavy capacitive loads. Supply current is typically 12mA, competitive with CMOS devices.

Several members of the series include flexible operating mode controls. The DRIVER DISABLE pin disables the drivers and the charge pump, the ON/$\overline{\text{OFF}}$ pin shuts down all circuitry. While shut down, the drivers and receivers assume high impedance output states.

LT, LTC and LT are registered trademarks of Linear Technology Corporation.

TYPICAL APPLICATION

Basic Operation

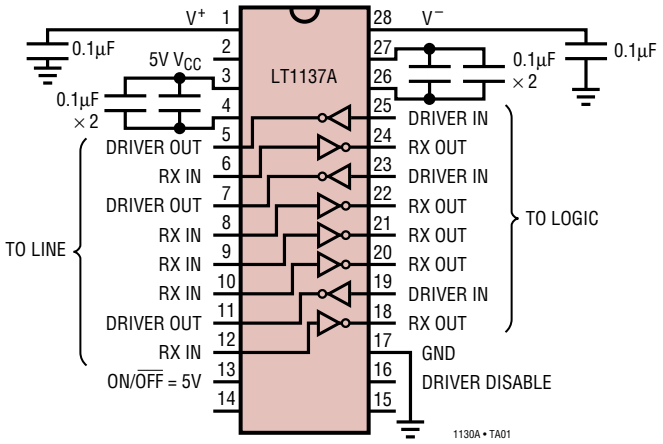

Output Waveforms

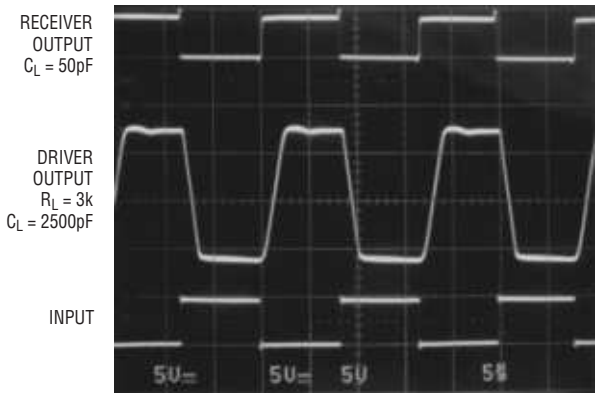

LT1130A 5-Driver/5-Receiver RS232 Transceiver
LT1131A 5-Driver/4-Receiver RS232 Transceiver w/Shutdown
LT1132A 5-Driver/3-Receiver RS232 Transceiver
LT1133A 3-Driver/5-Receiver RS232 Transceiver
LT1134A 4-Driver/4-Receiver RS232 Transceiver
LT1135A 5-Driver/3-Receiver RS232 Transceiver w/o Charge Pump
LT1136A 4-Driver/5-Receiver RS232 Transceiver w/Shutdown
LT1137A 3-Driver/5-Receiver RS232 Transceiver w/Shutdown
LT1138A 5-Driver/3-Receiver RS232 Transceiver w/Shutdown
LT1139A 4-Driver/4-Receiver RS232 Transceiver w/Shutdown
LT1140A 5-Driver/3-Receiver RS232 Transceiver w/o Charge Pump
LT1141A 3-Driver/5-Receiver RS232 Transceiver w/o Charge Pump

ABSOLUTE MAXIMUM RATINGS (Note 1)

Supply Voltage (V_{CC}) 6V
V^+ 13.2V
V^- (Note 7) ..... –13.2V
Input Voltage
  Driver ..... V^- to V^+
  Receiver ..... –30V to 30V
  On/Off Pin ..... –0.3V to 12V
  Driver Disable Pin ..... –0.3V to (V_{CC} + 0.3V)
Output Voltage
  Driver ..... –30V to 30V
  Receiver ..... –0.3V to (V_{CC} + 0.3V)
Short-Circuit Duration
  V^+ ..... 30 sec
  V^- ..... 30 sec
  Driver Output ..... Indefinite
  Receiver Output ..... Indefinite
Operating Temperature Range
  LT113XAC/LT114XAC ..... 0°C to 70°C
  LT113XAI/LT114XAI ..... –40° to 85°C
Storage Temperature Range ..... –65°C to 150°C
Lead Temperature (Soldering, 10 sec) ..... 300°C

PRODUCT SELECTION TABLE

Part Number	Power Supply Voltages*	Shutdown	Driver Disable	Drivers	Receivers	External Components
LT1130A	5	No	No	5	5	4 Capacitors
LT1131A	5	Yes	Yes	5	4	4 Capacitors
LT1132A	5	No	No	5	3	4 Capacitors
LT1133A**	5	No	No	3	5	4 Capacitors
LT1134A	5	No	No	4	4	4 Capacitors
LT1135A	5, 12, –12	No	No	5	3	None
LT1136A	5	Yes	Yes	4	5	4 Capacitors
LT1137A**	5	Yes	Yes	3	5	4 Capacitors
LT1138A	5	Yes	Yes	5	3	4 Capacitors
LT1139A	5, 12	Yes	No	4	4	2 Capacitors
LT1140A	5, 12, –12	Yes	Yes	5	3	None
LT1141A**	5, 12, –12	Yes	Yes	3	5	None

*The LT1130A, LT1131A, LT1132A, LT1134A, LT1136A, LT1137A and LT1138A can operate with 5V and 12V supplies and two external capacitors.
**Meets ±15kV ESD air gap discharge and ±8kV contact methods per IEC-1000-4-2.

PACKAGE/ORDER INFORMATION

5-DRIVER/5-RECEIVER

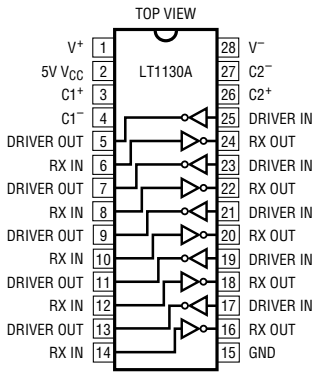

NW PACKAGE 28-LEAD PDIP
SW PACKAGE 28-LEAD PLASTIC SO WIDE

T_{JMAX} = 150°C, θ_{JA} = 56°C/W (NW)
T_{JMAX} = 150°C, θ_{JA} = 68°C/W (SW)

ORDER PART NUMBER

LT1130ACNW
LT1130ACSW
LT1130AISW

5-DRIVER/4-RECEIVER WITH SHUTDOWN

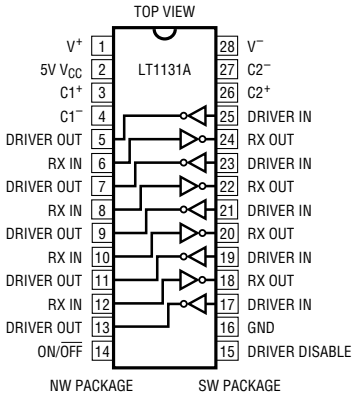

NW PACKAGE 28-LEAD PDIP
SW PACKAGE 28-LEAD PLASTIC SO WIDE

T_{JMAX} = 150°C, θ_{JA} = 56°C/W (NW)
T_{JMAX} = 150°C, θ_{JA} = 68°C/W (SW)

ORDER PART NUMBER

LT1131ACNW
LT1131ACSW

PACKAGE/ORDER INFORMATION

5-DRIVER/3-RECEIVER

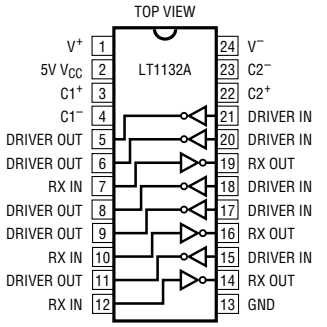

N PACKAGE
24-LEAD PDIP

SW PACKAGE
24-LEAD PLASTIC SO WIDE

T_{JMAX} = 150°C, θ_{JA} = 58°C/W (N)
T_{JMAX} = 150°C, θ_{JA} = 80°C/W (SW)

ORDER PART NUMBER

LT1132ACN
LT1132ACSW
LT1132AISW

3-DRIVER/5-RECEIVER

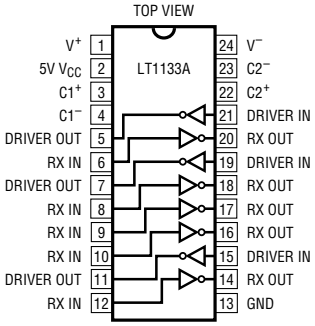

N PACKAGE
24-LEAD PDIP

SW PACKAGE
24-LEAD PLASTIC SO WIDE

T_{JMAX} = 150°C, θ_{JA} = 58°C/W (N)
T_{JMAX} = 150°C, θ_{JA} = 80°C/W (SW)

ORDER PART NUMBER

LT1133ACN
LT1133ACSW
LT1133AISW

4-DRIVER/4-RECEIVER

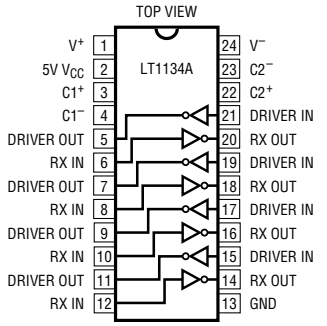

N PACKAGE
24-LEAD PDIP

SW PACKAGE
24-LEAD PLASTIC SO WIDE

T_{JMAX} = 150°C, θ_{JA} = 58°C/W (N)
T_{JMAX} = 150°C, θ_{JA} = 80°C/W (SW)

ORDER PART NUMBER

LT1134ACN
LT1134ACSW
LT1134AIN
LT1134AISW

5-DRIVER/3-RECEIVER WITHOUT CHARGE PUMP

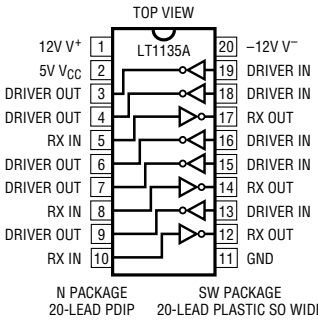

N PACKAGE
20-LEAD PDIP

SW PACKAGE
20-LEAD PLASTIC SO WIDE

T_{JMAX} = 150°C, θ_{JA} = 79°C/W (N)
T_{JMAX} = 150°C, θ_{JA} = 85°C/W (SW)

ORDER PART NUMBER

LT1135ACN
LT1135ACSW

4-DRIVER/5-RECEIVER WITH SHUTDOWN

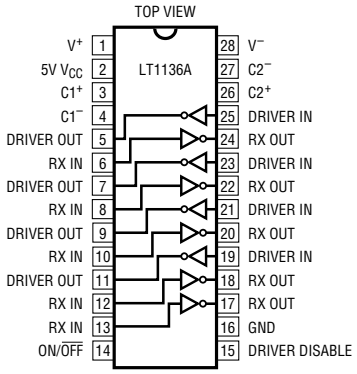

NW PACKAGE
28-LEAD PDIP

SW PACKAGE
28-LEAD PLASTIC SO WIDE

T_{JMAX} = 150°C, θ_{JA} = 56°C/W (NW)
T_{JMAX} = 150°C, θ_{JA} = 68°C/W (SW)

ORDER PART NUMBER

LT1136ACNW
LT1136ACSW

3-DRIVER/5-RECEIVER WITH SHUTDOWN

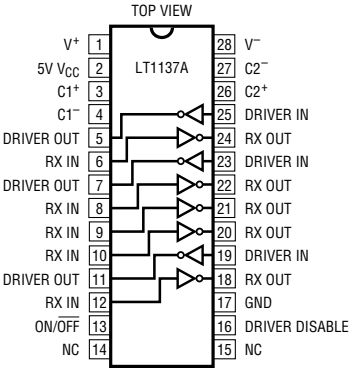

G PACKAGE
28-LEAD PLASTIC SSOP

NW PACKAGE
28-LEAD PDIP

SW PACKAGE
28-LEAD PLASTIC SO WIDE

T_{JMAX} = 150°C, θ_{JA} = 96°C/W (G)
T_{JMAX} = 150°C, θ_{JA} = 56°C/W (NW)
T_{JMAX} = 150°C, θ_{JA} = 68°C/W (SW)

ORDER PART NUMBER

LT1137ACG
LT1137ACNW
LT1137ACSW
LT1137AIG
LT1137AINW
LT1137AISW

PACKAGE/ORDER INFORMATION

5-DRIVER/3-RECEIVER WITH SHUTDOWN

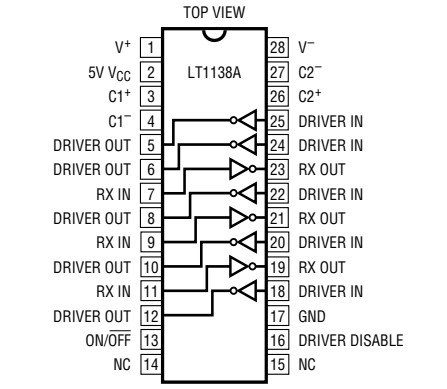

G PACKAGE 28-LEAD PLASTIC SSOP | NW PACKAGE 28-LEAD PDIP | SW PACKAGE 28-LEAD PLASTIC SO WIDE

T_{JMAX} = 150°C, θ_{JA} = 96°C/W (G)
T_{JMAX} = 150°C, θ_{JA} = 56°C/W (NW)
T_{JMAX} = 150°C, θ_{JA} = 68°C/W (SW)

ORDER PART NUMBER

LT1138ACG
LT1138ACNW
LT1138ACSW
LT1138AIG

4-DRIVER/4-RECEIVER WITH SHUTDOWN WITH 12V AND 5V SUPPLIES

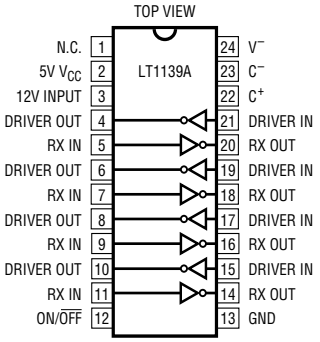

N PACKAGE 24-LEAD PDIP | SW PACKAGE 24-LEAD PLASTIC SO WIDE

T_{JMAX} = 150°C, θ_{JA} = 58°C/W (N)
T_{JMAX} = 150°C, θ_{JA} = 80°C/W (SW)

ORDER PART NUMBER

LT1139ACN
LT1139ACSW

5-DRIVER/3-RECEIVER WITH SHUTDOWN WITHOUT CHARGE PUMP

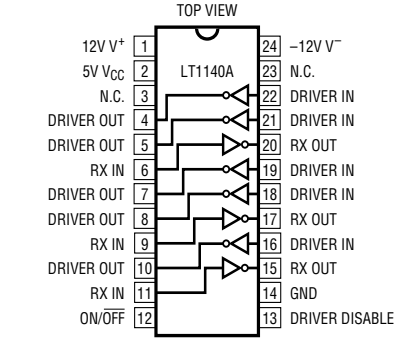

N PACKAGE 24-LEAD PDIP | SW PACKAGE 24-LEAD PLASTIC SO WIDE

T_{JMAX} = 150°C, θ_{JA} = 58°C/W (N)
T_{JMAX} = 150°C, θ_{JA} = 80°C/W (SW)

ORDER PART NUMBER

LT1140ACN
LT1140ACSW

3-DRIVER/5-RECEIVER WITH SHUTDOWN WITHOUT CHARGE PUMP

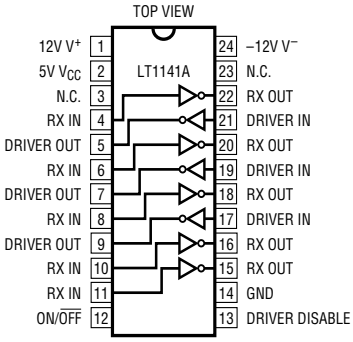

N PACKAGE 24-LEAD PDIP | SW PACKAGE 24-LEAD PLASTIC SO WIDE

T_{JMAX} = 150°C, θ_{JA} = 58°C/W (N)
T_{JMAX} = 150°C, θ_{JA} = 80°C/W (SW)

ORDER PART NUMBER

LT1141ACN
LT1141ACSW

Consult factory for Industrial and Military grade parts.

ELECTRICAL CHARACTERISTICS

The ● denotes the specifications which apply over the full operating temperature range, otherwise specifications are at T_A = 25°C. (Note 2)

PARAMETER	CONDITIONS		MIN	TYP	MAX	UNITS
Power Supply Generator						
V^+ Output				8.6		V
V^- Output				–7.8		V
5V V_{CC} Supply Current: LT1130A, LT1131A, LT1132A, LT1133A, LT1134A, LT1136A, LT1138A	(Note 3)	●		15	25	mA
5V V_{CC} Supply Current: LT1135A, LT1140A, LT1141A	(Note 3), V^+ = 12V, V^- = –12V	●		8	15	mA
5V V_{CC} Supply Current: LT1137A	(Note 3)	●		12	17	mA
5V V_{CC} Supply Current: LT1139A	(Note 3), V^+ = 12V	●		8	15	mA
12V V^+ Supply Current: LT1135A, LT1140A, LT1141A	(Note 3), V^- = –12V	●		1	4	mA
12V V^+ Supply Current: LT1139A	(Note 3)	●		6	10	mA
–12V V^- Supply Current: LT1135A, LT1140A, LT1141A	(Note 3) V^+ = 12V	●		2	6	mA

ELECTRICAL CHARACTERISTICS

The ● denotes the specifications which apply over the full operating temperature range, otherwise specifications are at T_A = 25°C. (Note 2)

PARAMETER	CONDITIONS		MIN	TYP	MAX	UNITS
Supply Current when OFF (V_{CC})	Shutdown (Note 4) Driver Disable	●		1 4	10	µA mA
Supply Rise Time Shutdown to Turn-On	C1, C2, C^+, C^- = 1.0µF C^+, C^- = 0.1µF, C1, C2 = 0.2µF			2.0 0.2		ms ms
ON/$\overline{OFF}$ Pin Thresholds	Input Low Level (Device Shut Down) Input High Level (Device Enabled)	● ●	 2.4	1.4 1.4	0.8	V V
ON/$\overline{OFF}$ Pin Current	0V ≤ $V_{ON/OFF}$ ≤ 5V	●	–15		80	µA
DRIVER DISABLE Pin Thresholds	Input Low Level (Drivers Enabled) Input High Level (Drivers Disabled)	● ●	 2.4	1.4 1.4	0.8	V V
DRIVER DISABLE Pin Current	0V ≤ $V_{DRIVER\ DISABLE}$ ≤ 5V	●	–10		500	µA
Oscillator Frequency				130		kHz
Any Driver						
Output Voltage Swing	Load = 3k to GND Positive Negative	● ●	5	7.3 –6.5	 –5	V V
Logic Input Voltage Level	Input Low Level (V_{OUT} = High) Input High Level (V_{OUT} = Low)	● ●	 2	1.4 1.4	0.8	V V
Logic Input Current	0.8V ≤ V_{IN} ≤ 2V	●		5	20	µA
Output Short-Circuit Current	V_{OUT} = 0V		±9	±17		mA
Output Leakage Current	Shutdown V_{OUT} = ±30V (Note 4)	●		10	100	µA
Data Rate	R_L = 3k, C_L = 2500pF R_L = 3k, C_L = 1000pF		120 250			kbaud kbaud
Slew Rate	R_L = 3k, C_L = 51pF R_L = 3k, C_L = 2500pF (Note 8)			15 6	30	V/µs V/µs
Propagation Delay	Output Transition t_{HL} High to Low (Note 5) Output Transition t_{LH} Low to High			0.6 0.5	1.3 1.3	µs µs
Any Receiver						
Input Voltage Thresholds	Input Low Threshold (V_{OUT} = High) Input High Threshold (V_{OUT} = Low)	● ●	0.8 	1.3 1.7	 2.4	V V
Hysteresis		●	0.1	0.4	1	V
Input Resistance	–10V < V_{IN} < 10V		3	5	7	kΩ
Output Voltage	Output Low, I_{OUT} = –1.6mA Output High, I_{OUT} = 160µA (V_{CC} = 5V)	● ●	 3.5	0.2 4.2	0.4	V V
Output Leakage Current	Shutdown (Note 4) 0 ≤ V_{OUT} ≤ V_{CC}	●		1	10	µA
Output Short-Circuit Current	Sinking Current, V_{OUT} = V_{CC} Sourcing Current, V_{OUT} = 0V		 10	–20 20	–10	mA mA
Propagation Delay	Output Transition t_{HL} High to Low (Note 6) Output Transition t_{LH} Low to High			250 350	600 600	ns ns

Note 1: Absolute Maximum Ratings are those values beyond which the life of the device may be impaired.

Note 2: Testing done at V_{CC} = 5V and $V_{ON/OFF}$ = 3V.

Note 3: Supply current is measured with driver and receiver outputs unloaded and the driver inputs tied high.

Note 4: Supply current and driver leakage current measurements in shutdown are performed with $V_{ON/OFF}$ = 0.1V. Supply current measurements using DRIVER DISABLE are performed with $V_{DRIVER\ DISABLE}$ = 3V. For LT1135, LT1139, LT1140 and LT1141 with 12V supplies, V_{OUT} leakage is 200µA for V_{OUT} forced to ±25V.

Note 5: For driver delay measurements, R_L = 3k and C_L = 51pF. Trigger points are set between the driver's input logic threshold and the output transition to the zero crossing (t_{HL} = 1.4V to 0V and t_{LH} = 1.4V to 0V).

Note 6: For receiver delay measurements, C_L = 51pF. Trigger points are set between the receiver's input logic threshold and the output transition to standard TTL/CMOS logic threshold (t_{HL} = 1.3V to 2.4V and t_{LH} = 1.7V to 0.8V).

Note 7: For LT1133A/LT1137A, absolute maximum externally applied V^- = –6.5V. Internal charge pump will drive this pin to a higher negative voltage.

Note 8: For LT1137A, 4V/µs minimum.

TYPICAL PERFORMANCE CHARACTERISTICS

Driver Output Voltage

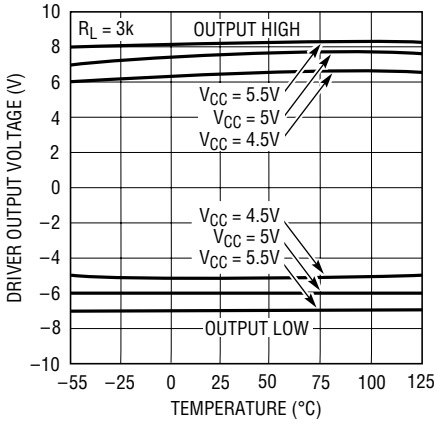

LT1130A • TPC01

Receiver Input Thresholds

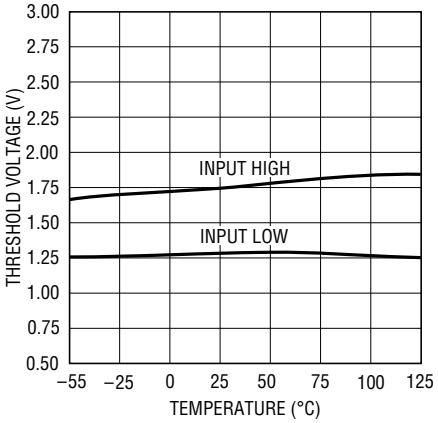

LT1137A • TPC02

Supply Current vs Data Rate

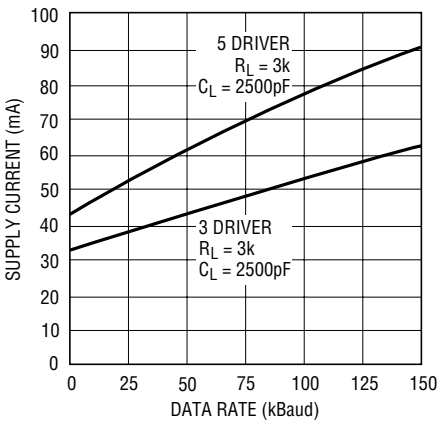

LT1130A • TPC03

Supply Current in Shutdown

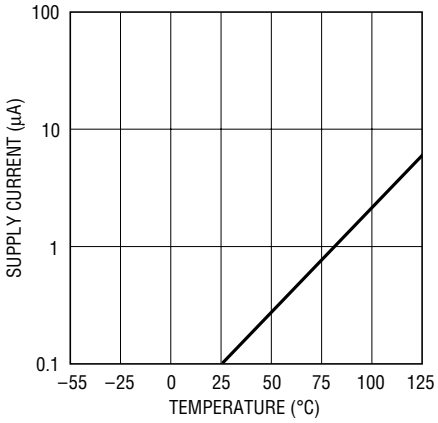

LT1137A • TPC04

Supply Current in Driver Disable

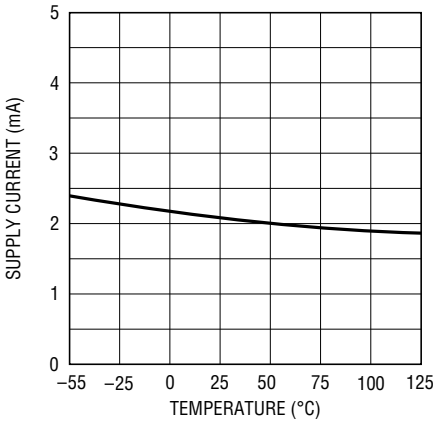

LT1137A • TPC05

Driver Disable Threshold

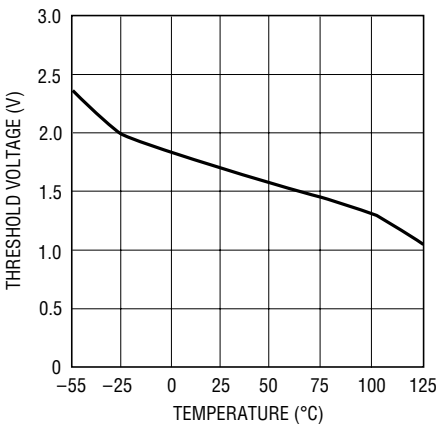

LT1137A • TPC06

ON/$\overline{\text{OFF}}$ Thresholds

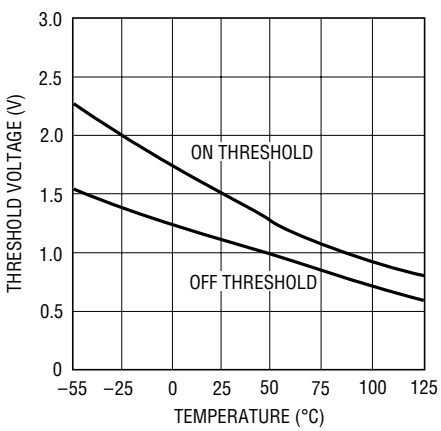

LT1137A • TPC07

Supply Current

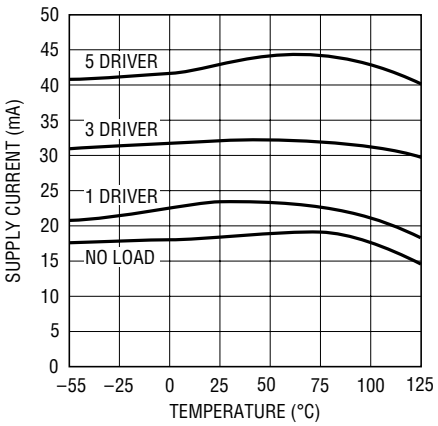

LT1130A • TPC08

Driver Leakage in Shutdown

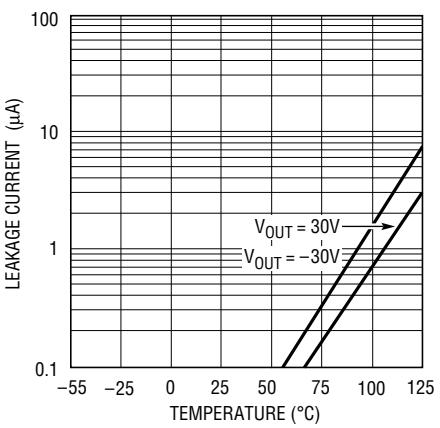

LT1137A • TPC09

TYPICAL PERFORMANCE CHARACTERISTICS

Driver Short-Circuit Current

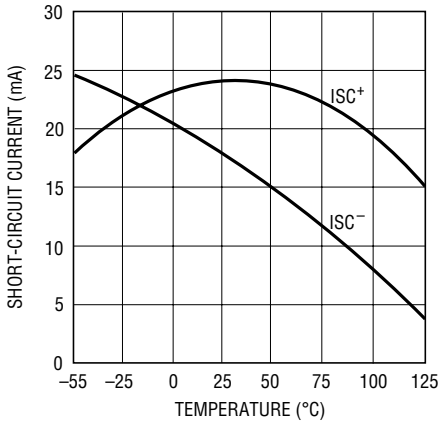

LT1137A • TPC10

Receiver Short-Circuit Current

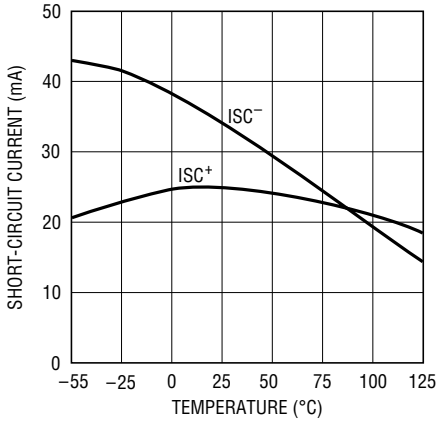

LT1137A • TPC11

Shutdown to Driver Output

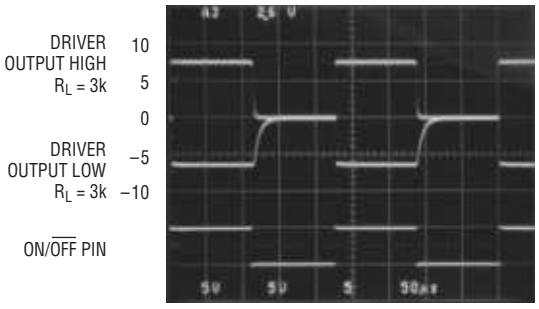

LT1137A • TPC12

Driver Output Waveforms

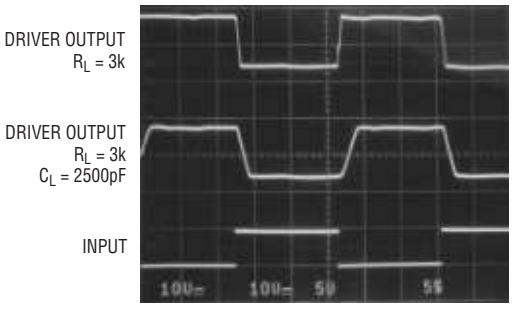

LT1137A • TPC13

PIN FUNCTIONS

V_{CC}: 5V Input Supply Pin. Supply current drops to zero in the shutdown mode. This pin should be decoupled with a 0.1µF ceramic capacitor close to the package pin. Insufficient supply bypassing can result in low output drive levels and erratic charge pump operation.

GND: Ground Pin.

ON/$\overline{OFF}$: Control the operation mode of the device and is TTL/CMOS compatible. A logic low puts the device in the shutdown mode which reduces input supply curent to zero and places all of the drivers and receivers in high impedance state. A logic high fully enables the transceiver.

DRIVER DISABLE: This pin provides an alternate control for the charge pump and RS232 drivers. A logic high on this pin shuts down the charge pump and places all drivers in a high impedance state. Receivers remain active under these conditions. Floating the DRIVER DISABLE pin or driving it to a logic low level fully enables the transceiver. A logic low on the ON/$\overline{OFF}$ pin supersedes the state of the DRIVER DISABLE pin. Supply current drops to 4mA when in driver disable mode.

V^+: Positive Supply Output (RS232 Drivers). $V^+ \approx 2V_{CC} - 1.5V$. This pin requires an external charge storage capacitor $C \geq 1.0\mu F$, tied to ground or V_{CC}. Larger value capacitors may be used to reduce supply ripple. With multiple transceivers, the V^+ and V^- pins may be paralleled into common capacitors. For large numbers of transceivers, increasing the size of the shared common storage capacitors is recommended to reduce ripple.

PIN FUNCTIONS

V^-: Negative Supply Output (RS232 Drivers). $V^- \approx -(2V_{CC} - 2.5V)$. This pin requires an external charge storage capacitor $C \geq 0.1\mu F$. V^- is short-circuit proof for 30 seconds.

$C1^+$, $C1^-$, $C2^+$, $C2^-$: Commutating Capacitor Inputs. These pins require two external capacitors $C \geq 0.2\mu F$: one from $C1^+$ to $C1^-$, and another from $C2^+$ to $C2^-$. To maintain charge pump efficiency, the capacitor's effective series resistance should be less than 2Ω. For $C \geq 1\mu F$, low ESR tantalum capacitors work well in this application, although small value ceramic capacitors may be used with a minimal reduction in charge pump compliance. In applications where larger positive voltages are available, such as 12V, C1 may be omitted and the positive voltage may be connected directly to the $C1^+$ pin. In this mode of operation, the V^+ pin should be decoupled with a $0.1\mu F$ ceramic capacitor.

DRIVER IN: RS232 Driver Input Pins. These inputs are TTL/CMOS compatible. Inputs should not be allowed to float. Tie unused inputs to V_{CC}.

DRIVER OUT: Driver Outputs at RS232 Voltage Levels. Driver output swing meets RS232 levels for loads up to 3k. Slew rates are controlled for lightly loaded lines. Output current capability is sufficient for load conditions up to 2500pF. Outputs are in a high impedance state when in shutdown mode, $V_{CC} = 0V$, or when the DRIVER DISABLE pin is active. Outputs are fully short-circuit protected from V^- + 30V to V^+ – 30V. Applying higher voltages will not damage the device if the overdrive is moderately current limited. Short circuits on one output can load the power supply generator and may disrupt the signal levels of the other outputs. The driver outputs are protected against ESD to ±10kV for human body model discharges.

RX IN: Receiver Inputs. These pins accept RS232 level signals (±30V) into a protected 5k terminating resistor. The receiver inputs are protected against ESD to ±10kV for human body model discharges. Each receiver provides 0.4V of hysteresis for noise immunity. Open receiver inputs assume a logic low state.

RX OUT: Receiver Outputs with TTL/CMOS Voltage Levels. Outputs are in a high impedance state when in shutdown mode to allow data line sharing. Outputs are fully short-circuit protected to ground or V_{CC} with the power on, off, or in shutdown mode.

ESD PROTECTION

The RS232 line inputs of the LT1130A/LT1140A series of RS232 Driver/Receivers have on-chip protection from ESD transients up to ±10kV. The protection structures act to divert the static discharge safely to system ground. In order for the ESD protection to function effectively, the power supply and ground pins of the LT1130A/LT1140A must be connected to ground through low impedances. The power supply decoupling capacitors and charge pump storage capacitors provide this low impedance in normal application of the circuit. The only constraint is that low ESR capacitors must be used for bypassing and charge storage. ESD testing must be done with pins V_{CC}, V^+, V^- and GND shorted to ground or connected with low ESR capacitors.

The ESD protection on the LT1133A, LT1137A and LT1141A meets ±15kV air gap discharge and ±8kV contact methods per IEC-1000-4-2.

ESD Test Circuit

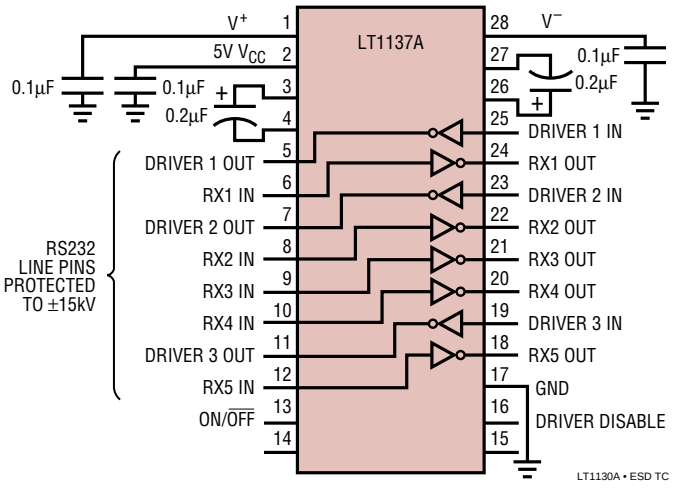

TYPICAL APPLICATIONS

Operation Using 5V and 12V Power Supplies

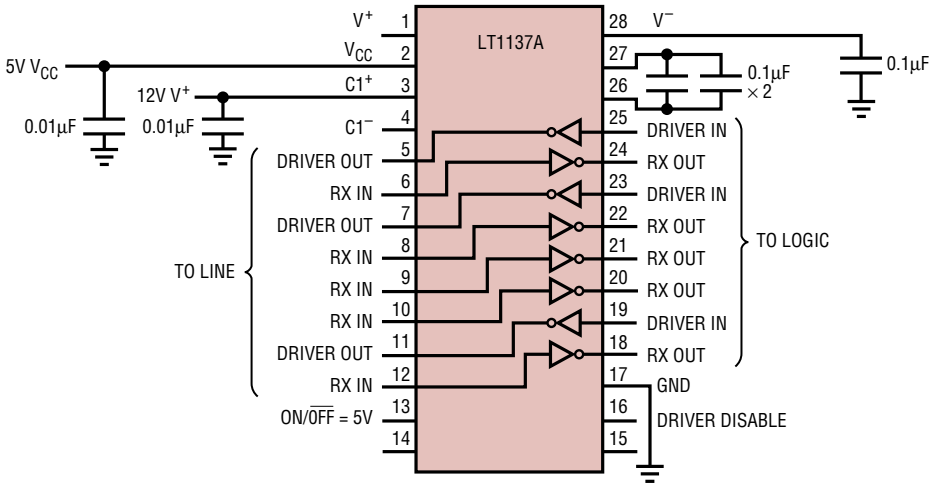

Typical Mouse Driving Application

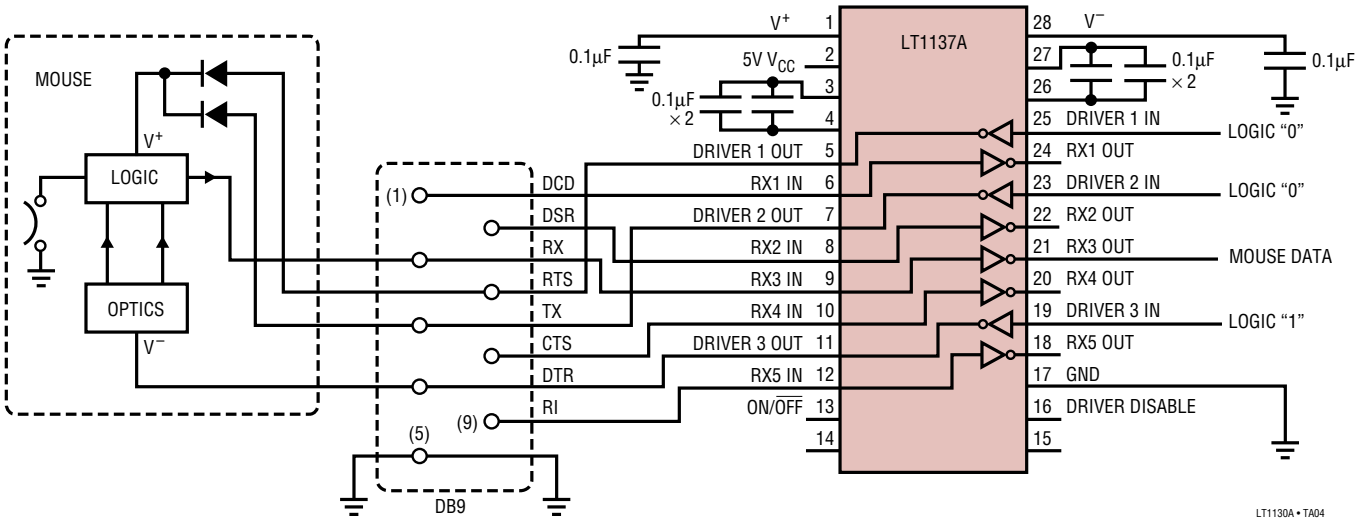

PACKAGE DESCRIPTION

Dimensions in inches (millimeters) unless otherwise noted.

G Package
28-Lead Plastic SSOP (0.209)
(LTC DWG # 05-08-1640)

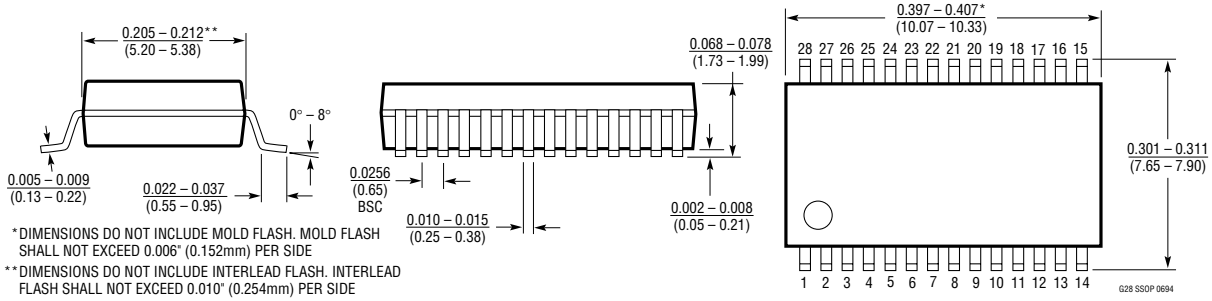

*DIMENSIONS DO NOT INCLUDE MOLD FLASH. MOLD FLASH SHALL NOT EXCEED 0.006" (0.152mm) PER SIDE

**DIMENSIONS DO NOT INCLUDE INTERLEAD FLASH. INTERLEAD FLASH SHALL NOT EXCEED 0.010" (0.254mm) PER SIDE

N Package
20-Lead PDIP (Narrow 0.300)
(LTC DWG # 05-08-1510)

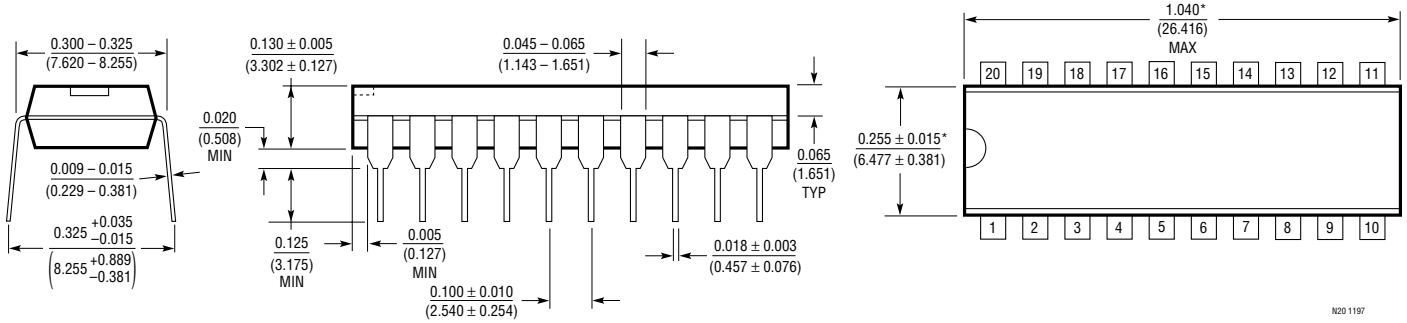

*THESE DIMENSIONS DO NOT INCLUDE MOLD FLASH OR PROTRUSIONS. MOLD FLASH OR PROTRUSIONS SHALL NOT EXCEED 0.010 INCH (0.254mm)

N Package
24-Lead PDIP (Narrow 0.300)
(LTC DWG # 05-08-1510)

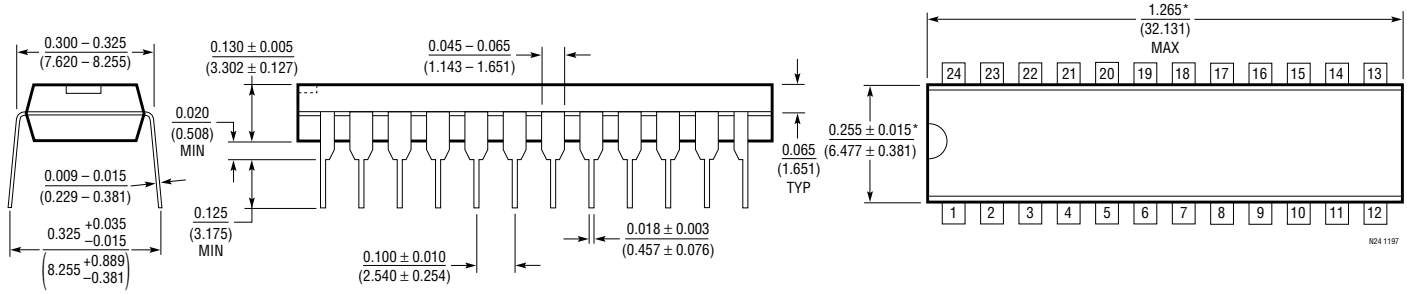

*THESE DIMENSIONS DO NOT INCLUDE MOLD FLASH OR PROTRUSIONS. MOLD FLASH OR PROTRUSIONS SHALL NOT EXCEED 0.010 INCH (0.254mm)

PACKAGE DESCRIPTION

Dimensions in inches (millimeters) unless otherwise noted.

NW Package
28-Lead PDIP (Wide 0.600)
(LTC DWG # 05-08-1520)

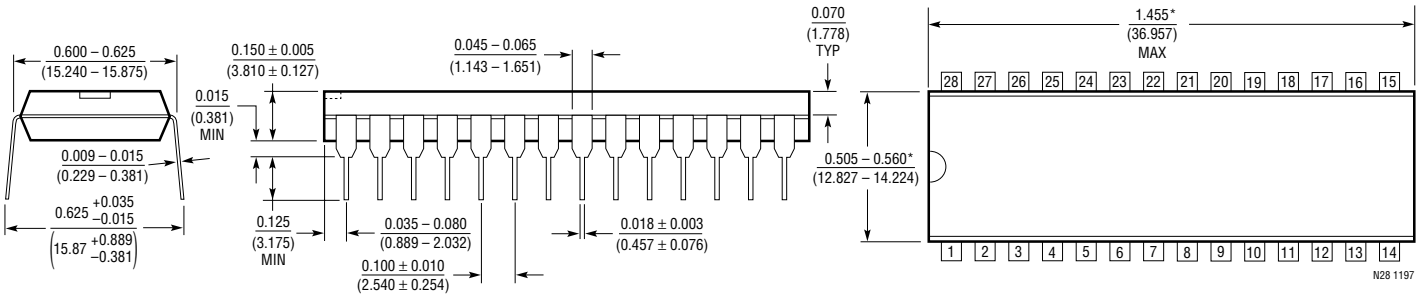

*THESE DIMENSIONS DO NOT INCLUDE MOLD FLASH OR PROTRUSIONS.
MOLD FLASH OR PROTRUSIONS SHALL NOT EXCEED 0.010 INCH (0.254mm)

SW Package
20-Lead Plastic Small Outline (Wide 0.300)
(LTC DWG # 05-08-1620)

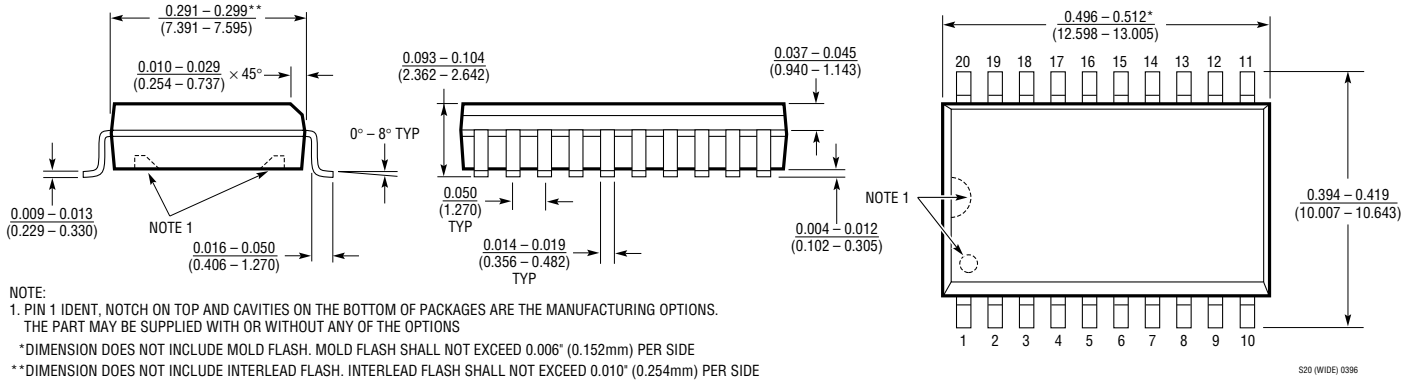

NOTE:
1. PIN 1 IDENT, NOTCH ON TOP AND CAVITIES ON THE BOTTOM OF PACKAGES ARE THE MANUFACTURING OPTIONS.
THE PART MAY BE SUPPLIED WITH OR WITHOUT ANY OF THE OPTIONS

*DIMENSION DOES NOT INCLUDE MOLD FLASH. MOLD FLASH SHALL NOT EXCEED 0.006" (0.152mm) PER SIDE

**DIMENSION DOES NOT INCLUDE INTERLEAD FLASH. INTERLEAD FLASH SHALL NOT EXCEED 0.010" (0.254mm) PER SIDE

SW Package
24-Lead Plastic Small Outline (Wide 0.300)
(LTC DWG # 05-08-1620)

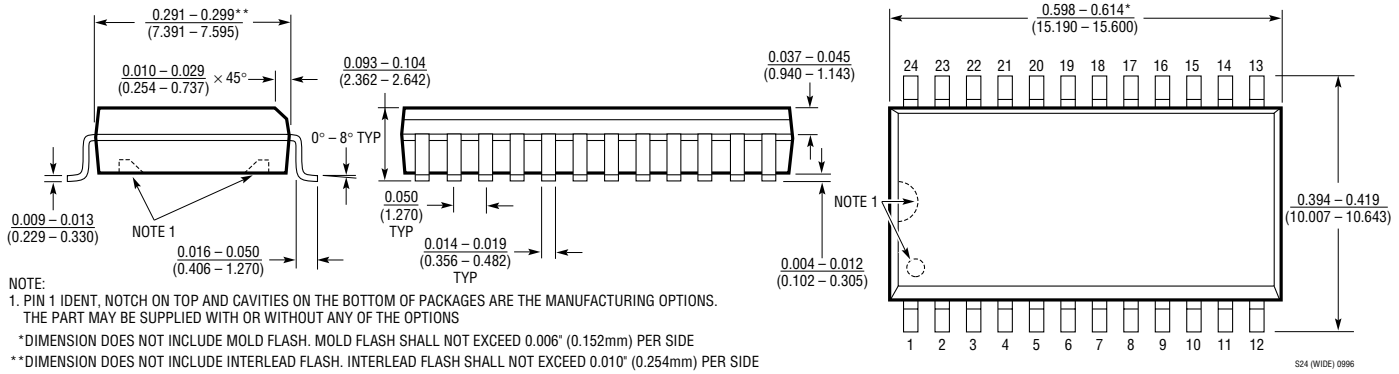

NOTE:
1. PIN 1 IDENT, NOTCH ON TOP AND CAVITIES ON THE BOTTOM OF PACKAGES ARE THE MANUFACTURING OPTIONS.
THE PART MAY BE SUPPLIED WITH OR WITHOUT ANY OF THE OPTIONS

*DIMENSION DOES NOT INCLUDE MOLD FLASH. MOLD FLASH SHALL NOT EXCEED 0.006" (0.152mm) PER SIDE

**DIMENSION DOES NOT INCLUDE INTERLEAD FLASH. INTERLEAD FLASH SHALL NOT EXCEED 0.010" (0.254mm) PER SIDE

LINEAR TECHNOLOGY

Information furnished by Linear Technology Corporation is believed to be accurate and reliable. However, no responsibility is assumed for its use. Linear Technology Corporation makes no representation that the interconnection of its circuits as described herein will not infringe on existing patent rights.

PACKAGE DESCRIPTION

Dimensions in inches (millimeters) unless otherwise noted.

SW Package
28-Lead Plastic Small Outline (Wide 0.300)
(LTC DWG # 05-08-1620)

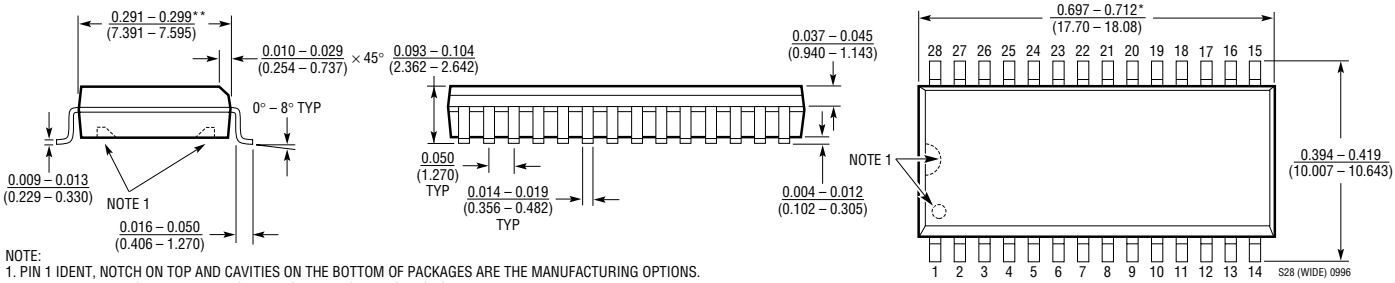

NOTE:
1. PIN 1 IDENT, NOTCH ON TOP AND CAVITIES ON THE BOTTOM OF PACKAGES ARE THE MANUFACTURING OPTIONS. THE PART MAY BE SUPPLIED WITH OR WITHOUT ANY OF THE OPTIONS

*DIMENSION DOES NOT INCLUDE MOLD FLASH. MOLD FLASH SHALL NOT EXCEED 0.006" (0.152mm) PER SIDE

**DIMENSION DOES NOT INCLUDE INTERLEAD FLASH. INTERLEAD FLASH SHALL NOT EXCEED 0.010" (0.254mm) PER SIDE

TYPICAL APPLICATION

Sharing Power Supply Generator with a Second Transceiver

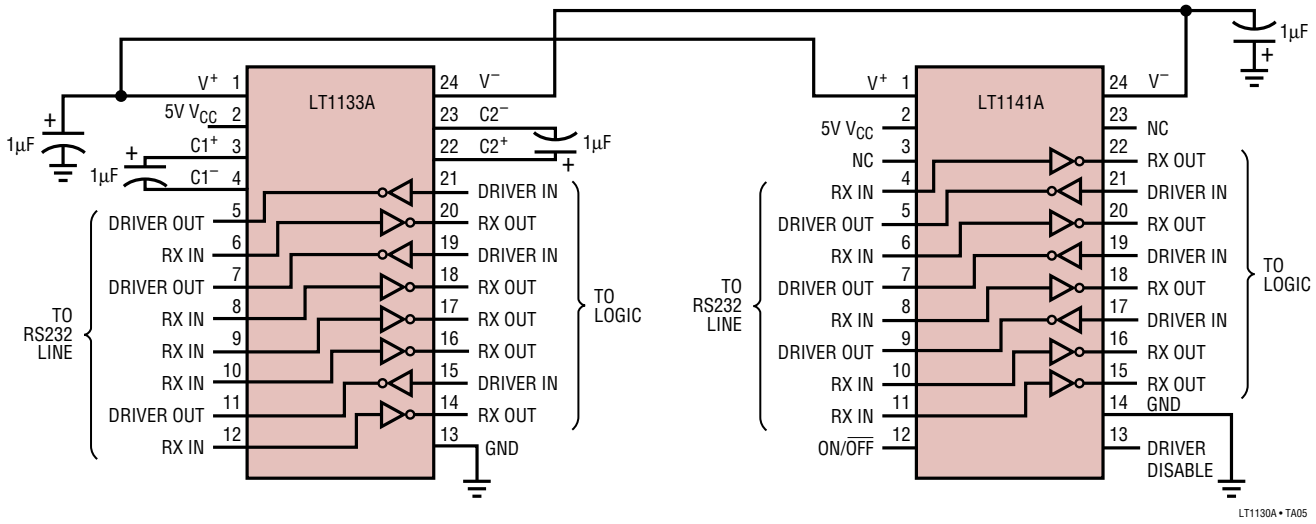

LT1130A • TA05

RELATED PARTS

PART NUMBER	DESCRIPTION	COMMENTS
LT1180A/LT1181A	2-Driver/2-Receiver RS232 Transceivers	Single 5V Supply with 0.1µF Capacitors
LT1237	3-Driver/5-Receiver RS232 Transceiver	Lower Power Upgrade for LT1137A
LTC1327	3-Driver/5-Receiver RS562 Transceiver	3.3V Operation
LTC1337	3-Driver/5-Receiver RS232 Transceiver	Ultralow Power for DTE Applications
LTC1338	5-Driver/3-Receiver RS232 Transceiver	Ultralow Power for DCE Applications
LTC1348	3-Driver/5-Receiver RS232 Transceiver	3.3V to 5V Operation

Linear Technology Corporation
1630 McCarthy Blvd., Milpitas, CA 95035-7417• (408) 432-1900
FAX: (408) 434-0507•TELEX: 499-3977 • www.linear-tech.com
1130asfb LT/TP 0799 2K REV B • PRINTED IN USA
© LINEAR TECHNOLOGY CORPORATION 1993