Precision Voltage References

FEATURES

- Trimmed Output ±0.3%
- Low Drift—5ppm/°C Typ
- Low Noise—3ppm$_{(P-P)}$
- High Line Rejection
- Temperature Output—REF-02
- Low Supply Current 1.4mA Max

APPLICATIONS

- A/D and D/A Converters
- Precision Regulators
- Constant Current Sources
- V/F Converters
- Bridge Excitation

DESCRIPTION

The REF-01/REF-02 are precision 10V and 5V bandgap references which provide stable output voltages over a wide range of operating conditions. Output voltage is accurate to ±0.3% with a low 5ppm/°C typical temperature coefficient. The REF-01 and REF-02 are excellent choices for applications where low drift, moderate accuracy, low power consumption and low cost are considerations.

The REF-02 includes a temperature output pin which provides a linear voltage proportional to absolute temperature.

For lower drift and higher accuracy references, please see the LT1019 and LT1021 data sheets.

LT, LTC and LTM are registered trademarks of Linear Technology Corporation. All other trademarks are the property of their respective owners.

TYPICAL APPLICATION

Ultra Linear Strain Gauge Amplifier

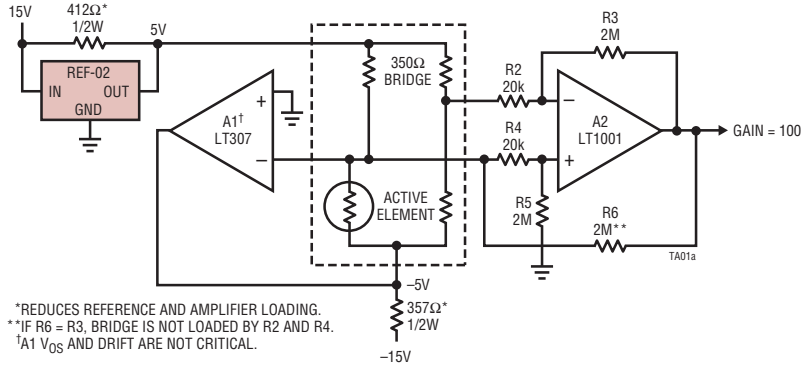

Output Voltage Temperature Drift

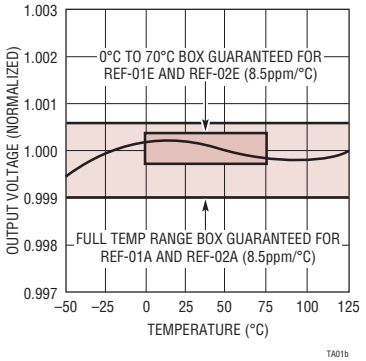

ABSOLUTE MAXIMUM RATINGS

REF-01/REF-02 A, E, H 40V
REF-01C/REF-02C.....30V
Power Dissipation 500mW
Output Short-Circuit Duration
To Ground..... Indefinite
To $V_{IN} \leq 16V$ ..... Indefinite
To $V_{IN} > 16V$ .....Not Allowed

Storage Temperature Range .....–65°C to 150°C
Operating Temperature
REF-01/REF-02, REF-01A/REF-02A...–55°C to 125°C
REF-01E/REF-02E, REF-01H/REF-02H,
REF-01C/REF-02C, REF-01D/REF-02D .... 0°C to 70°C
Lead Temperature (Soldering, 10 sec).....300°C

PIN CONFIGURATION

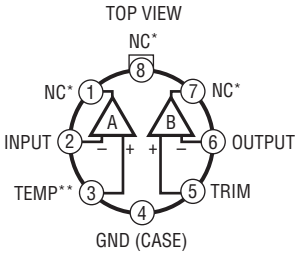

H PACKAGE
8-LEAD TO-5 METAL CAN
T_{JMAX} = 150°C, θ_{JA} = 150°C/W, θ_{JC} = 45°C/W
*INTERNALLY CONNECTED. DO NOT CONNECT EXTERNALLY.
**DO NOT CONNECT ON REF-01

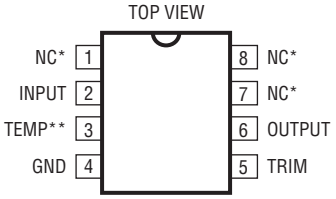

N8 PACKAGE
8-LEAD PLASTIC DIP
T_{JMAX} = 100°C, θ_{JA} = 130°C/W
*INTERNALLY CONNECTED. DO NOT CONNECT EXTERNALLY.
**DO NOT CONNECT ON REF-01

J8 PACKAGE
8-LEAD CERDIP
T_{JMAX} = 150°C, θ_{JA} = 100°C/W

ORDER INFORMATION

LEAD FREE FINISH	PART MARKING	PACKAGE DESCRIPTION	TEMPERATURE RANGE
REF01EN8#PBF	REF01EN8	8-Lead Plastic Dip	0°C to 70°C
REF01HN8#PBF	REF01HN8	8-Lead Plastic Dip	0°C to 70°C
REF01CN8#PBF	REF01CN8	8-Lead Plastic Dip	0°C to 70°C
REF02EN8#PBF	REF02EN8	8-Lead Plastic Dip	0°C to 70°C
REF02HN8#PBF	REF02HN8	8-Lead Plastic Dip	0°C to 70°C
REF02CN8#PBF	REF02CN8	8-Lead Plastic Dip	0°C to 70°C
REF02DN8#PBF	REF02DN8	8-Lead Plastic Dip	0°C to 70°C
REF01AH#PBF		8-Lead TO-5 Metal Can	–55°C to 125°C
REF01H#PBF		8-Lead TO-5 Metal Can	–55°C to 125°C
REF01EH#PBF		8-Lead TO-5 Metal Can	0°C to 70°C
REF01HH#PBF		8-Lead TO-5 Metal Can	0°C to 70°C
REF01CH#PBF		8-Lead TO-5 Metal Can	0°C to 70°C
REF02H#PBF		8-Lead TO-5 Metal Can	–55°C to 125°C
REF02EH#PBF		8-Lead TO-5 Metal Can	0°C to 70°C
REF02HH#PBF		8-Lead TO-5 Metal Can	0°C to 70°C
REF02CH#PBF		8-Lead TO-5 Metal Can	0°C to 70°C

ORDER INFORMATION

LEAD FREE FINISH	PART MARKING	PACKAGE DESCRIPTION	TEMPERATURE RANGE
REF02DH#PBF		8-Lead TO-5 Metal Can	0°C to 70°C
REF01EJ8#PBF		8-Lead Cerdip	0°C to 70°C
REF01HJ8#PBF		8-Lead Cerdip	0°C to 70°C
REF01CJ8#PBF		8-Lead Cerdip	0°C to 70°C
REF02EJ8#PBF		8-Lead Cerdip	0°C to 70°C
REF02HJ8#PBF		8-Lead Cerdip	0°C to 70°C
REF02CJ8#PBF		8-Lead Cerdip	0°C to 70°C
REF02DJ8#PBF		8-Lead Cerdip	0°C to 70°C
OBSOLETE **Consider the N Package for Alternate Source**			
LEAD BASED FINISH	**PART MARKING**	**PACKAGE DESCRIPTION**	**TEMPERATURE RANGE**
REF02AH	REF02AH	8-Lead TO-5 Metal Can	–55°C to 125°C
REF02AJ8	REF02AJ8	8-Lead Cerdip	–55°C to 125°C

Consult LTC Marketing for parts specified with wider operating temperature ranges.

For more information on lead free part marking, go to: http://www.linear.com/leadfree/
For more information on tape and reel specifications, go to: http://www.linear.com/tapeandreel/

ELECTRICAL CHARACTERISTICS

V_{IN} = 15V, T_A = 25°C unless otherwise noted.

SYMBOL	PARAMETER	CONDITIONS		REF-01A/E, REF-02A/E MIN	TYP	MAX	REF-01H, REF-02H MIN	TYP	MAX	UNITS
V_O	Output Voltage	I_L = 0mA	REF-01 REF-02	9.97 4.985	10 5	10.03 5.015	9.95 4.975	10 5	10.05 5.025	V V
	Output Adjustment Range	R_P = 10kΩ	REF-01 REF-02	±3 ±3	5, –27 5, –13		±3 ±3	5, –27 5, –13		% %
e_{nP-P}	Output Voltage Noise	0.1Hz to 10Hz (Note 7)	REF-01 REF-02		20 10			20 10		μV_{P-P} μV_{P-P}
V_{IN}	Input Voltage Range		REF-01 REF-02	12 7		40 40	12 7		40 40	V V
$\frac{\Delta V_{OUT}}{\Delta V_{IN}}$	Line Regulation (Note 2)	$(V_{OUT} + 3V) \le V_{IN} \le 33V$			0.0001	0.01		0.0001	0.01	%/V
$\frac{\Delta V_{OUT}}{\Delta I_{OUT}}$	Load Regulation (Note 2)	I_L = 0mA to 10mA	REF-01 REF-02		0.0005 0.001	0.008 0.01		0.0005 0.001	0.01 0.01	%/mA %/mA
I_Q	Quiescent Supply Current	No Load			0.65	1.4		0.65	1.4	mA
I_{OUT}	Load Current Sink Current			10 –0.3	20 –20		10 –0.3	20 –20		mA mA
I_{SC}	Short-Circuit Current	V_O = 0V			25			25		mA
V_T	Temperature Voltage Output	(Note 3)	REF-02 Only		620			620		mV

V_{IN} = 15V, T_A = 25°C unless otherwise noted.

SYMBOL	PARAMETER	CONDITIONS		REF-01C, REF-02C MIN	TYP	MAX	REF-02D MIN	TYP	MAX	UNITS
V_O	Output Voltage	I_L = 0mA	REF-01 REF-02	9.9 4.95	10 5	10.1 5.05	 4.9	 5	 5.1	V V
	Output Adjustment Range	R_P = 10kΩ	REF-01 REF-02	 ±2.7	5, –27 5, –13		 ±2	 5, –13		% %
e_{nP-P}	Output Voltage Noise	0.1Hz to 10Hz (Note 7)	REF-01 REF-02		30 12			 12		μV_{P-P} μV_{P-P}

ref012fd

ELECTRICAL CHARACTERISTICS

V_{IN} = 15V, T_A = 25°C unless otherwise noted.

SYMBOL	PARAMETER	CONDITIONS	REF-01C, REF-02C MIN	REF-01C, REF-02C TYP	REF-01C, REF-02C MAX	REF-02D MIN	REF-02D TYP	REF-02D MAX	UNITS
$\frac{\Delta V_{OUT}}{\Delta V_{IN}}$	Line Regulation (Note 2)	$(V_{OUT} + 3V) \le V_{IN} \le 33V$		0.0001	0.015		0.0001	0.04	%/V
$\frac{\Delta V_{OUT}}{\Delta I_{OUT}}$	Load Regulation (Note 2)	I_L = 0mA to 8mA I_L = 0mA to 4mA		0.0005	0.015		 0.001	 0.04	%/mA %/mA
I_Q	Quiescent Supply Current	No Load		0.65	1.6		0.65	2	mA
I_{OUT}	Load Current Sink Current		8 –0.2	20 20		8 –0.2	20 20		mA mA
I_{SC}	Short-Circuit Current	V_O = 0V		25			25		mA
V_T	Temperature Voltage Output	(Note 3) REF-02 Only		620			620		mV

The ● denotes the specifications which apply over the full operating temperature range, otherwise specifications are at T_A = 25°C. V_{IN} = 15V, –55°C ≤ T_A ≤ ±125°C for REF-01A/REF-02A and REF-01/REF-02, 0°C ≤ T_A ≤ 70°C for REF-01E/REF-02E and REF-01H/REF-02H, I_L = 0mA unless otherwise noted.

SYMBOL	PARAMETER	CONDITIONS		REF-01A/E, REF-02A/E MIN	REF-01A/E, REF-02A/E TYP	REF-01A/E, REF-02A/E MAX	REF-01H/ REF-02H MIN	REF-01H/ REF-02H TYP	REF-01H/ REF-02H MAX	UNITS
$\frac{\Delta V}{\Delta T}$	Output Voltage Change With Temperature (Notes 4, 5)	0°C ≤ T_A ≤ 70°C –55°C ≤ T_A ≤ 125°C	● ●		0.02 0.09	0.06 0.15		0.035 0.144	0.17 0.45	% %
TC	Output Voltage Temperature Coefficient	(Note 6)	●		5	8.5		8	25	ppm/°C
	Change in V_O Temperature Coefficient With Output Adjustment	R_P = 10kΩ	●		0.5			0.5		ppm/%
$\frac{\Delta V_{OUT}}{\Delta V_{IN}}$	Line Regulation $(V_{OUT} + 3V) \le V_{IN} \le$ 33V (Note 2)	0°C ≤ T_A ≤ 70°C –55°C ≤ T_A ≤ 125°C	● ●		0.0001 0.0001	0.012 0.015		0.0001 0.0001	0.012 0.015	%/V %/V
$\frac{\Delta V_{OUT}}{\Delta I_{OUT}}$	Load Regulation (I_L = 0mA to 8mA) (Note 2)	0°C ≤ T_A ≤ 70°C –55°C ≤ T_A ≤ 125°C	● ●		0.002 0.002	0.01 0.012		0.002 0.002	0.012 0.015	%/mA %/mA
	Temperature Voltage Output Temperature Coefficient	(Note 3) REF-02	●		2.1			2.1		mV/°C

The ● denotes the specifications which apply over the full operating temperature range, otherwise specifications are at T_A = 25°C. V_{IN} = 15V, 0°C ≤ T_A ≤ 70°C and I_L = 0mA unless otherwise noted.

SYMBOL	PARAMETER	CONDITIONS		REF-01C, REF-02C MIN	REF-01C, REF-02C TYP	REF-01C, REF-02C MAX	REF-02D MIN	REF-02D TYP	REF-02D MAX	UNITS
$\frac{\Delta V}{\Delta T}$	Output Voltage Change With Temperature	(Notes 4, 5)	●			0.45			1.7	%
TC	Output Voltage Temperature Coefficient	(Note 6)	●		8	65		8	250	ppm/°C
	Change in V_O Temperature Coefficient With Output Adjustment	R_P = 10kΩ	●		0.5			0.5		ppm/%
$\frac{\Delta V_{OUT}}{\Delta V_{IN}}$	Line Regulation (Note 2)	V_{IN} = 8V to 30V	●		0.0001	0.018		0.0001	0.05	%/V
$\frac{\Delta V_{OUT}}{\Delta I_{OUT}}$	Load Regulation (Note 2)	I_L = 0mA to 5mA	●		0.002	0.018		0.002	0.05	%/mA
	Temperature Voltage Output Temperature Coefficient	(Note 3) REF-02	●		2.1			2.1		mV/°C

ELECTRICAL CHARACTERISTICS

Note 1: Stresses beyond those listed under Absolute Maximum Ratings may cause permanent damage to the device. Exposure to any Absolute Maximum Rating condition for extended periods may affect device reliability and lifetime.

Note 2: Line and load regulation specifications include the effect of self heating.

Note 3: Limit current in or out of Pin 3 to 50nA and capacitance on Pin 3 to 30pF.

Note 4: ΔV is defined as the absolute difference between the maximum output voltage and the minimum output voltage over the specified temperature range expressed as a percentage of nominal output.

$$\Delta V = \left| \frac{V_{MAX} - V_{MIN}}{V_{OUT}} \right| \bullet 100$$

Note 5: ΔV specification applies trimmed or untrimmed.

Note 6: TC is defined as ΔV divided by the temperature range, i.e.,

$$TC = \frac{\Delta V}{T_{MAX} - T_{MIN}}$$

Note 7: 0.1Hz to 10Hz noise cannot be 100% tested on modern high speed test equipment, so Linear Technology does not put a guaranteed maximum specification on this parameter for standard units. 100% bench testing of 0.1Hz to 10Hz noise is available on special request. To ensure low output noise, Linear Technology *does* 100% test 10Hz to 1kHz noise. Consult factory for details.

PACKAGE DESCRIPTION

H Package
8-Lead TO-5 Metal Can (.230 Inch PCD)
(Reference LTC DWG # 05-08-1321)

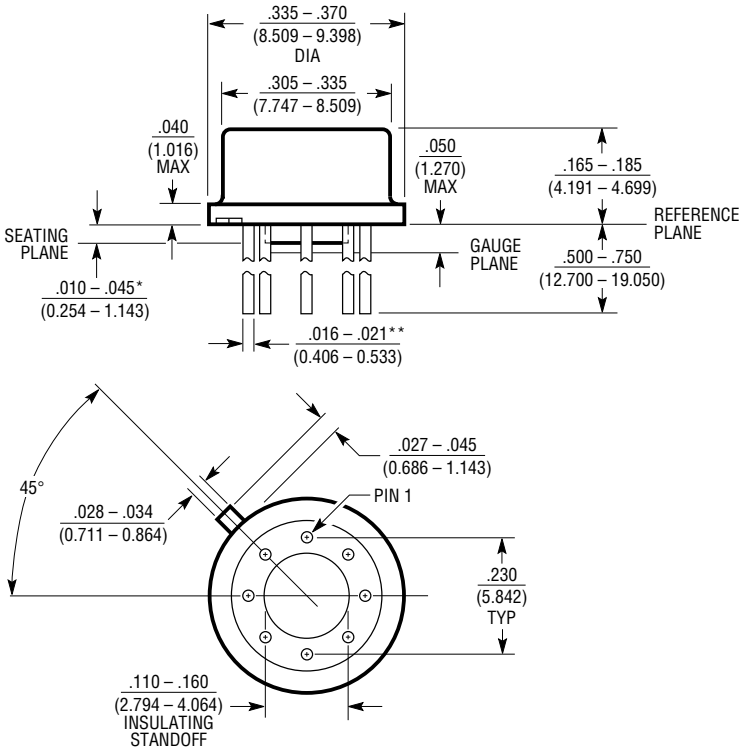

*LEAD DIAMETER IS UNCONTROLLED BETWEEN THE REFERENCE PLANE AND THE SEATING PLANE

**FOR SOLDER DIP LEAD FINISH, LEAD DIAMETER IS .016 – .024 (0.406 – 0.610)

H8 (TO-5) 0.230 PCD 0204

PACKAGE DESCRIPTION

J8 Package
8-Lead CERDIP (Narrow .300 Inch, Hermetic)
(Reference LTC DWG # 05-08-1110)

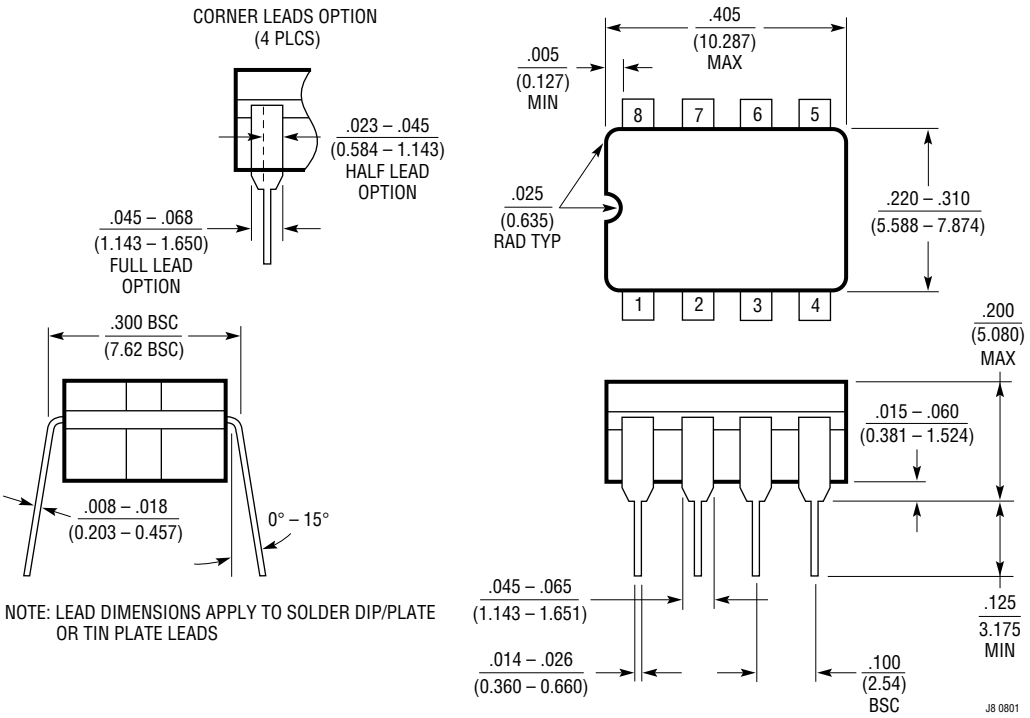

PACKAGE DESCRIPTION

N8 Package
8-Lead PDIP (Narrow .300 Inch)
(Reference LTC DWG # 05-08-1510)

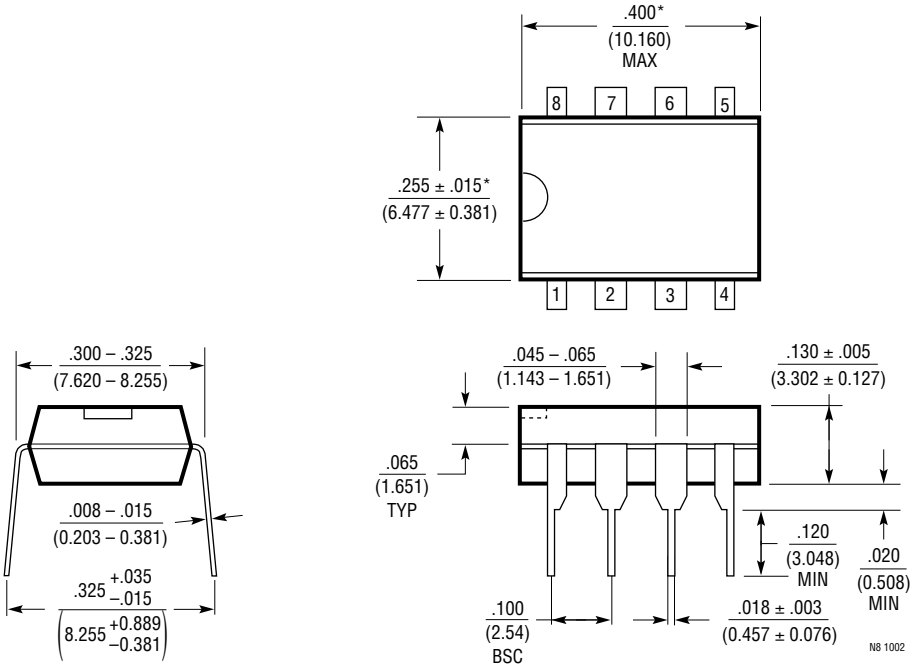

NOTE:
1. DIMENSIONS ARE $\frac{\text{INCHES}}{\text{MILLIMETERS}}$

*THESE DIMENSIONS DO NOT INCLUDE MOLD FLASH OR PROTRUSIONS.
MOLD FLASH OR PROTRUSIONS SHALL NOT EXCEED .010 INCH (0.254mm)

Information furnished by Linear Technology Corporation is believed to be accurate and reliable. However, no responsibility is assumed for its use. Linear Technology Corporation makes no representation that the interconnection of its circuits as described herein will not infringe on existing patent rights.

RELATED PARTS

PART NUMBER	DESCRIPTION	COMMENTS
LT1019	0.05%, 5ppm/°C Precision Reference	Pin Compatible With the REF-01, REF-02, Improved Specs

Linear Technology Corporation
1630 McCarthy Blvd., Milpitas, CA 95035-7417
(408) 432-1900 • FAX: (408) 434-0507 • www.linear.com
LT 0409 REV D • PRINTED IN USA
© LINEAR TECHNOLOGY CORPORATION 1991