LMC6001

LMC6001 Ultra Ultra-Low Input Current Amplifier



Literature Number: SNOS694F

National Semiconductor

November 4, 2009

LMC6001

Ultra Ultra-Low Input Current Amplifier

General Description

Featuring 100% tested input currents of 25 fA max., low operating power, and ESD protection of 2000V, the LMC6001 achieves a new industry benchmark for low input current operational amplifiers. By tightly controlling the molding compound, National is able to offer this ultra-low input current in a lower cost molded package.

To avoid long turn-on settling times common in other low input current opamps, the LMC6001A is tested 3 times in the first minute of operation. Even units that meet the 25 fA limit are rejected if they drift.

Because of the ultra-low input current noise of 0.13 fA/$\sqrt{\text{Hz}}$, the LMC6001 can provide almost noiseless amplification of high resistance signal sources. Adding only 1 dB at 100 kΩ, 0.1 dB at 1 MΩ and 0.01 dB or less from 10 MΩ to 2,000 MΩ, the LMC6001 is an almost noiseless amplifier.

The LMC6001 is ideally suited for electrometer applications requiring ultra-low input leakage such as sensitive photodetection transimpedance amplifiers and sensor amplifiers. Since input referred noise is only 22 nV/$\sqrt{\text{Hz}}$, the LMC6001 can achieve higher signal to noise ratio than JFET input type electrometer amplifiers. Other applications of the LMC6001 include long interval integrators, ultra-high input impedance instrumentation amplifiers, and sensitive electrical-field measurement circuits.

Features

(Max limit, 25°C unless otherwise noted)

- Input current (100% tested): 25 fA
- Input current over temp.: 2 pA
- Low power: 750 µA
- Low V_{OS}: 350 µV
- Low noise: 22 nV/$\sqrt{\text{Hz}}$ @1 kHz Typ.

Applications

- Electrometer amplifier
- Photodiode preamplifier
- Ion detector
- A.T.E. leakage testing

Connection Diagrams

8-Pin DIP

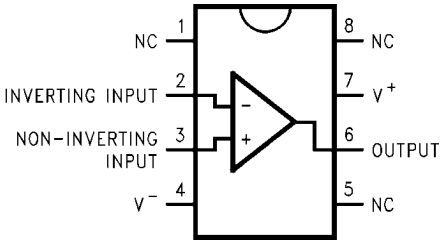

Top View

8-Pin Metal Can

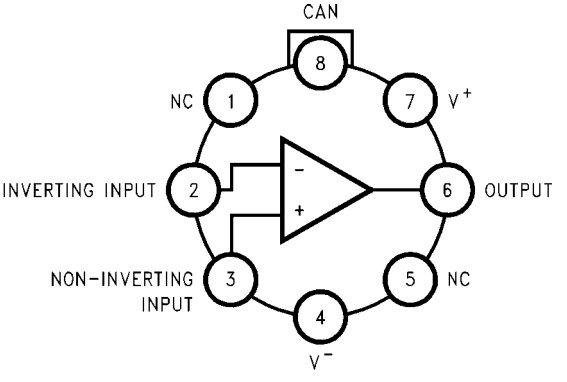

Top View

Ordering Information

Package	Industrial Temperature Range −40°C to +85°C	NSC Package Drawing
8-Pin Molded DIP	LMC6001AIN, LMC6001BIN, LMC6001CIN	N08E
8-Pin Metal Can	LMC6001AIH, LMC6001BIH	H08C

© 2009 National Semiconductor Corporation

Absolute Maximum Ratings ( )

If Military/Aerospace specified devices are required, please contact the National Semiconductor Sales Office/ Distributors for availability and specifications.

Differential Input Voltage	±Supply Voltage
Voltage at Input/Output Pin	$(V^+) + 0.3V, (V^-) - 0.3V$
Supply Voltage ($V^+ - V^-$)	−0.3V to +16V
Output Short Circuit to V^+	(,)
Output Short Circuit to V^-	( )
Lead Temperature	
(Soldering, 10 Sec.)	260°C
Storage Temperature	−65°C to +150°C
Junction Temperature	150°C
Current at Input Pin	±10 mA
Current at Output Pin	±30 mA
Current at Power Supply Pin	40 mA
Power Dissipation	( )
ESD Tolerance ( )	2 kV

Operating Ratings ( )

Temperature Range	
LMC6001AI, LMC6001BI, LMC6001CI	
$-40°C \le T_J \le +85°C$	
Supply Voltage	$4.5V \le V^+ \le 15.5V$
Thermal Resistance ( )	
θ_{JA}, N Package	100°C/W
θ_{JA}, H Package	145°C/W
θ_{JC}, H Package	45°C/W
Power Dissipation	( )

DC Electrical Characteristics

Limits in standard typeface guaranteed for $T_J = 25°C$ and limits in **boldface type** apply at the temperature extremes. Unless otherwise specified, $V^+ = 5V$, $V^- = 0V$, $V_{CM} = 1.5V$, and $R_L > 1M$.

Symbol	Parameter	Conditions	Typical ( )	Limits ( )			Units
				LMC6001AI	LMC6001BI	LMC6001CI	
I_B	Input Current	Either Input, $V_{CM} = 0V$, $V_S = \pm 5V$	10	25 **2000**	100 **4000**	1000 **4000**	fA
I_{OS}	Input Offset Current		5	**1000**	**2000**	**2000**	
V_{OS}	Input Offset Voltage			0.35 **1.0**	1.0 **1.7**	1.0 **2.0**	mV
		$V_S = \pm 5V$, $V_{CM} = 0V$		0.7 **1.35**	1.35 **2.0**	1.35	
TCV_{OS}	Input Offset Voltage Drift		2.5	10	10		µV/°C
R_{IN}	Input Resistance		>1				Tera Ω
CMRR	Common Mode Rejection Ratio	$0V \le V_{CM} \le 7.5V$, $V^+ = 10V$	83	75 **72**	72 **68**	66 **63**	dB min
+PSRR	Positive Power Supply Rejection Ratio	$5V \le V^+ \le 15V$	83	73 **70**	66 **63**	66 **63**	
−PSRR	Negative Power Supply Rejection Ratio	$0V \ge V^- \ge -10V$	94	80 **77**	74 **71**	74 **71**	
A_V	Large Signal Voltage Gain	Sourcing, $R_L = 2 k\Omega$ ( )	1400	400 **300**	300 **200**	300 **200**	V/mV min
		Sinking, $R_L = 2 k\Omega$ ( )	350	180 **100**	90 **60**	90 **60**	
V_{CM}	Input Common-Mode Voltage	$V^+ = 5V$ and 15V For CMRR ≥ 60 dB	−0.4	−0.1 **0**	−0.1 **0**	−0.1 **0**	V max
			$V^+ - 1.9$	$V^+ - 2.3$ **$V^+ - 2.5$**	$V^+ - 2.3$ **$V^+ - 2.5$**	$V^+ - 2.3$ **$V^+ - 2.5$**	V min

Symbol	Parameter	Conditions	Typical ( )	Limits ( )			Units
				LMC6001AI	LMC6001BI	LMC6001CI	
V_O	Output Swing	V^+ = 5V R_L = 2 kΩ to 2.5V	4.87	4.80 **4.73**	4.75 **4.67**	4.75 **4.67**	V min
			0.10	0.14 **0.17**	0.20 **0.24**	0.20 **0.24**	V max
		V^+ = 15V R_L = 2 kΩ to 7.5V	14.63	14.50 **14.34**	14.37 **14.25**	14.37 **14.25**	V min
			0.26	0.35 **0.45**	0.44 **0.56**	0.44 **0.56**	V max
I_O	Output Current	Sourcing, V^+ = 5V, V_O = 0V	22	16 **10**	13 **8**	13 **8**	mA min
		Sinking, V^+ = 5V, V_O = 5V	21	16 **13**	13 **10**	13 **10**	
		Sourcing, V^+ = 15V, V_O = 0V	30	28 **22**	23 **18**	23 **18**	
		Sinking, V^+ = 15V, V_O = 13V ( )	34	28 **22**	23 **18**	23 **18**	
I_S	Supply Current	V^+ = 5V, V_O = 1.5V	450	750 **900**	750 **900**	750 **900**	µA max
		V^+ = 15V, V_O = 7.5V	550	850 **950**	850 **950**	850 **950**	

AC Electrical Characteristics

Limits in standard typeface guaranteed for T_J = 25°C and limits in **boldface type** apply at the temperature extremes. Unless otherwise specified, V^+ = 5V, V^- = 0V, V_{CM} = 1.5V and R_L > 1M.

Symbol	Parameter	Conditions	Typical ( )	Limits ( )			Units
				LM6001AI	LM6001BI	LM6001CI	
SR	Slew Rate	( )	1.5	0.8 **0.6**	0.8 **0.6**	0.8 **0.6**	V/µs min
GBW	Gain-Bandwidth Product		1.3				MHz
φf_m	Phase Margin		50				Deg
G_M	Gain Margin		17				dB
e_n	Input-Referred Voltage Noise	F = 1 kHz	22				nV/$\sqrt{\text{Hz}}$
i_n	Input-Referred Current Noise	F = 1 kHz	0.13				fA/$\sqrt{\text{Hz}}$
THD	Total Harmonic Distortion	F = 10 kHz, A_V = −10, R_L = 100 kΩ, V_O = 8 V_{PP}	0.01				%

Note 1: Absolute Maximum Ratings indicate limits beyond which damage to the device may occur. Operating Ratings indicate conditions for which the device is intended to be functional but do not guarantee specific performance limits. For guaranteed specifications and test conditions, see the Electrical Characteristics. The guaranteed specifications apply only for the test conditions listed.

Note 2: Applies to both single supply and split supply operation. Continuous short circuit operation at elevated ambient temperature can result in exceeding the maximum allowed junction temperature of 150°C. Output currents in excess of ±30 mA over long term may adversely affect reliability.

Note 3: The maximum power dissipation is a function of $T_{J(max)}$, θ_{JA}, and T_A. The maximum allowable power dissipation at any ambient temperature is $P_D = (T_{J(max)} - T_A)/\theta_{JA}$.

Note 4: Typical values represent the most likely parametric norm.

Note 5: All limits are guaranteed by testing or statistical analysis.

Note 6: V^+ = 15V, V_{CM} = 7.5V and R_L connected to 7.5V. For Sourcing tests, 7.5V ≤ V_O ≤ 11.5V. For Sinking tests, 2.5V ≤ V_O ≤ 7.5V.

Note 7: V^+ = 15V. Connected as Voltage Follower with 10V step input. Limit specified is the lower of the positive and negative slew rates.

Note 8: For operating at elevated temperatures the device must be derated based on the thermal resistance θ_{JA} with $P_D = (T_J - T_A)/\theta_{JA}$.

Note 9: Human body model, 1.5 kΩ in series with 100 pF.

Note 10: Do not connect the output to V^+, when V^+ is greater than 13V or reliability will be adversely affected.

Note 11: All numbers apply for packages soldered directly into a printed circuit board.

Typical Performance Characteristics

$V_S = \pm 7.5V$, $T_A = 25°C$, unless otherwise specified

Input Current vs. Temperature

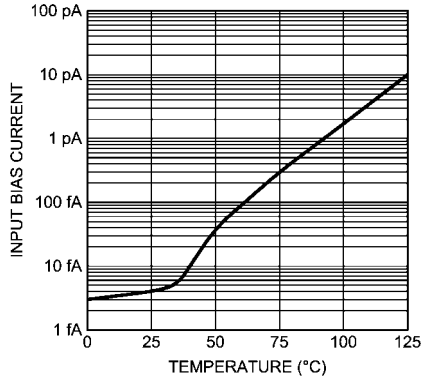

1188716

Input Current vs. V_{CM} $V_S = \pm 5V$

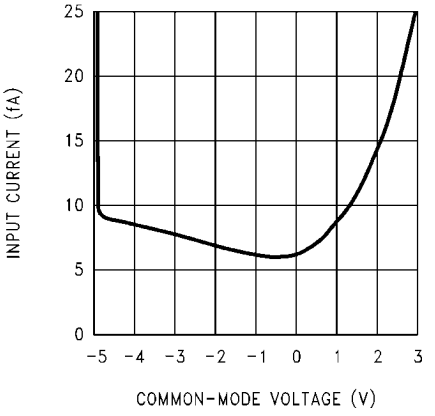

1188717

Supply Current vs. Supply Voltage

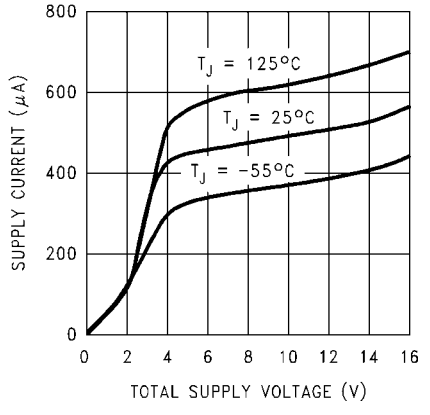

1188718

Input Voltage vs.Output Voltage

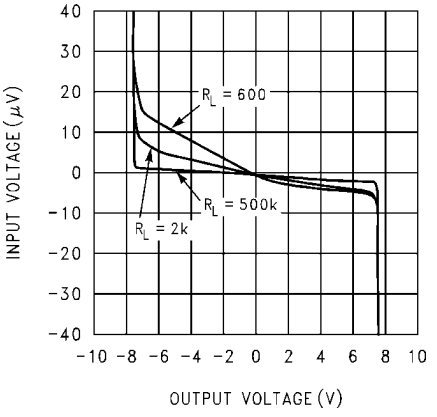

1188719

Common Mode Rejection Ratio vs. Frequency

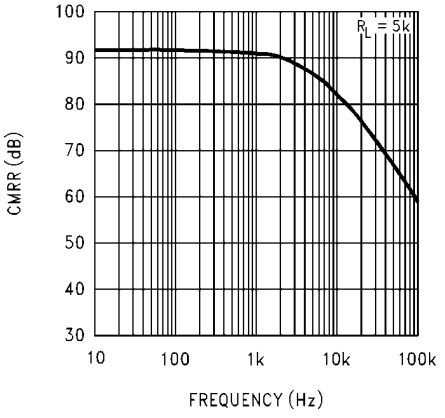

1188720

Power Supply Rejection Ratio vs. Frequency

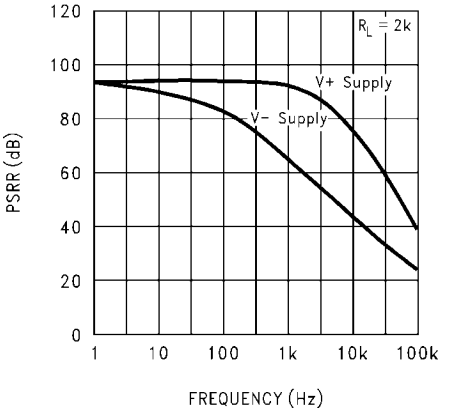

1188721

Input Voltage Noise vs. Frequency

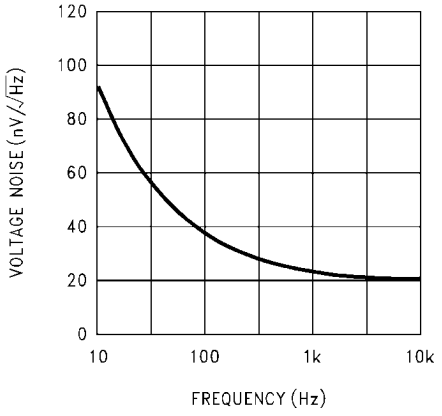

1188722

Noise Figure vs. Source Resistance

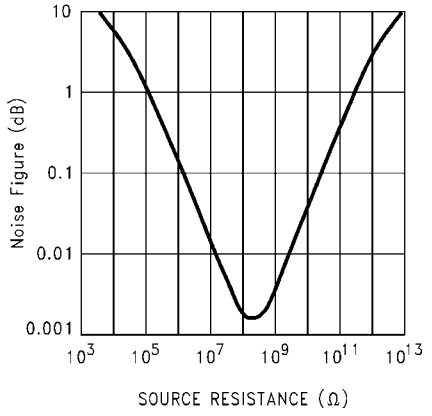

1188723

Output Characteristics Sourcing Current

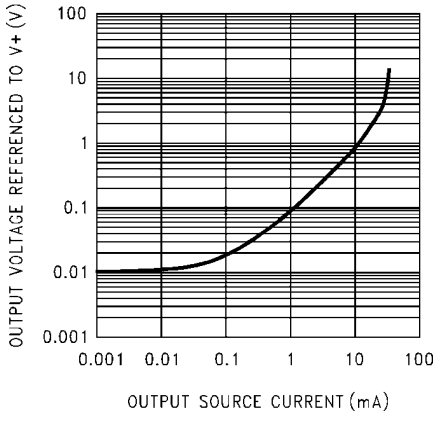

1188724

Output Characteristics Sinking Current

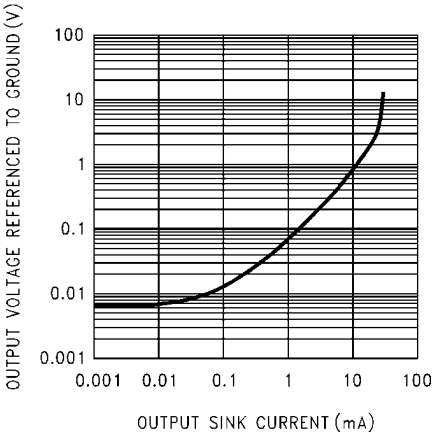

1188725

Gain and Phase Response vs. Temperature (−55°C to +125°C)

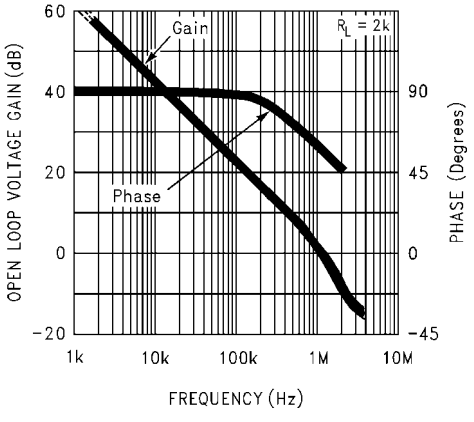

1188726

Gain and Phase Response vs. Capacitive Load with R_L = 500 kΩ

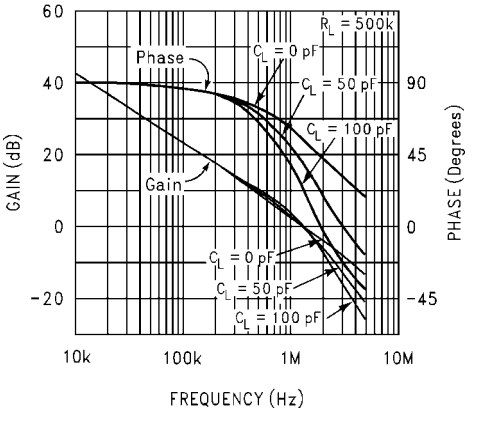

1188727

Open Loop Frequency Response

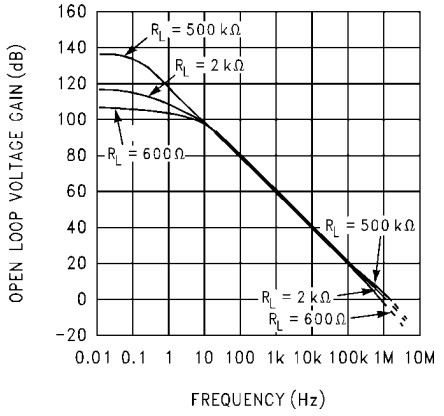

1188728

Inverting Small Signal Pulse Response

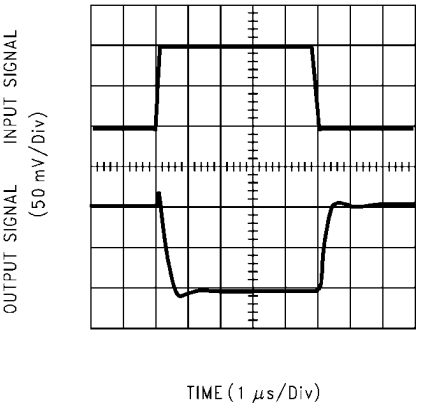

1188729

Inverting Large Signal Pulse Response

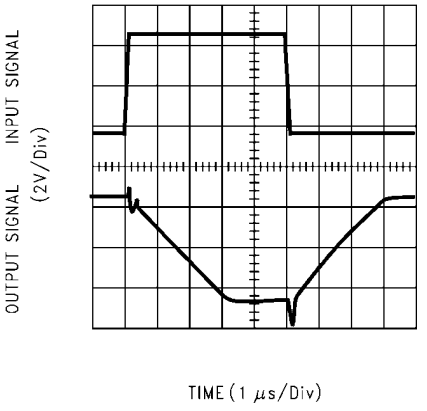

1188730

Non-Inverting Small Signal Pulse Response

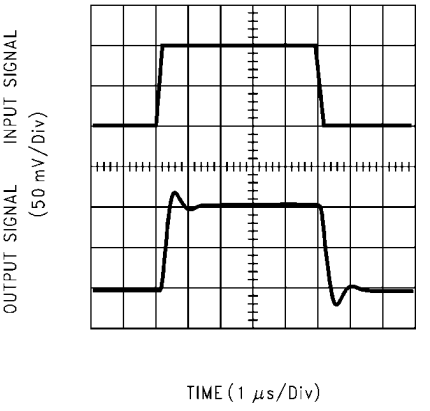

1188731

Non-Inverting Large Signal Pulse Response

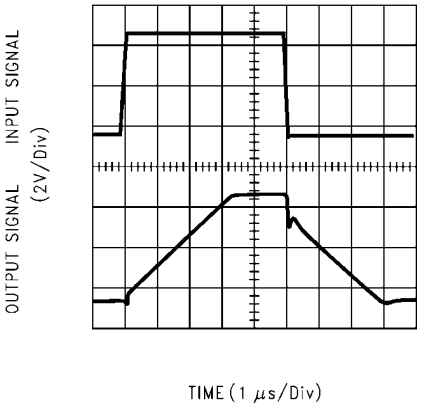

1188732

Stability vs. Capacitive Load

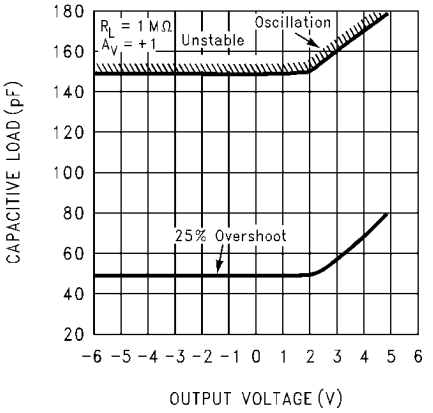

1188733

Applications Hints

AMPLIFIER TOPOLOGY

The LMC6001 incorporates a novel op-amp design topology that enables it to maintain rail-to-rail output swing even when driving a large load. Instead of relying on a push-pull unity gain output buffer stage, the output stage is taken directly from the internal integrator, which provides both low output impedance and large gain. Special feed-forward compensation design techniques are incorporated to maintain stability over a wider range of operating conditions than traditional op-amps. These features make the LMC6001 both easier to design with, and provide higher speed than products typically found in this low power class.

COMPENSATING FOR INPUT CAPACITANCE

It is quite common to use large values of feedback resistance for amplifiers with ultra-low input current, like the LMC6001.

Although the LMC6001 is highly stable over a wide range of operating conditions, certain precautions must be met to achieve the desired pulse response when a large feedback resistor is used. Large feedback resistors with even small values of input capacitance, due to transducers, photodiodes, and circuit board parasitics, reduce phase margins.

When high input impedances are demanded, guarding of the LMC6001 is suggested. Guarding input lines will not only reduce leakage, but lowers stray input capacitance as well. (See).

The effect of input capacitance can be compensated for by adding a capacitor, C_f, around the feedback resistors (as in) such that:

$$\frac{1}{2\pi R_1 C_{IN}} \geq \frac{1}{2\pi R_2 C_f}$$

or

$$R_1 C_{IN} \leq R_2 C_f$$

Since it is often difficult to know the exact value of C_{IN}, C_f can be experimentally adjusted so that the desired pulse response is achieved. Refer to the LMC660 and LMC662 for a more detailed discussion on compensating for input capacitance.

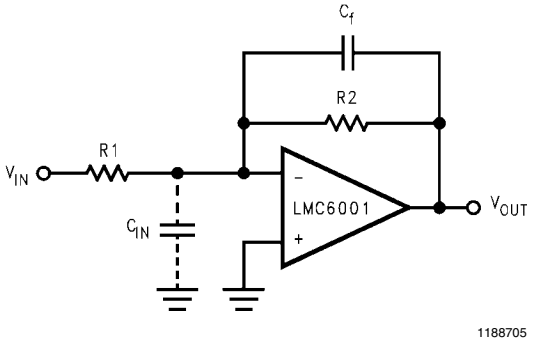

FIGURE 1. Cancelling the Effect of Input Capacitance

CAPACITIVE LOAD TOLERANCE

All rail-to-rail output swing operational amplifiers have voltage gain in the output stage. A compensation capacitor is normally included in this integrator stage. The frequency location of the dominant pole is affected by the resistive load on the amplifier. Capacitive load driving capability can be optimized by using an appropriate resistive load in parallel with the capacitive load (see Typical Curves).

Direct capacitive loading will reduce the phase margin of many op-amps. A pole in the feedback loop is created by the combination of the op-amp's output impedance and the capacitive load. This pole induces phase lag at the unity-gain crossover frequency of the amplifier resulting in either an oscillatory or underdamped pulse response. With a few external components, op amps can easily indirectly drive capacitive loads, as shown in .

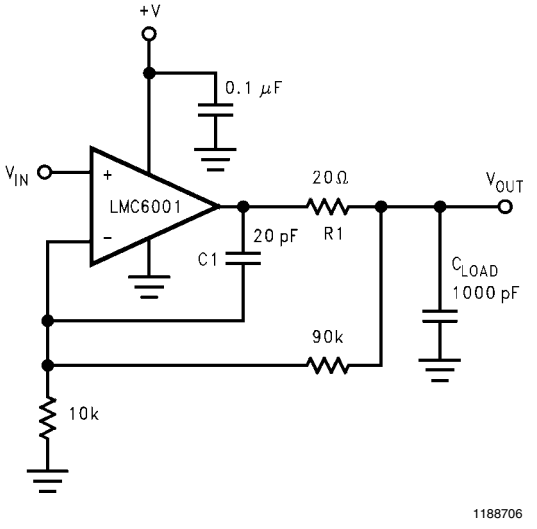

FIGURE 2. LMC6001 Noninverting Gain of 10 Amplifier, Compensated to Handle Capacitive Loads

In the circuit of , R1 and C1 serve to counteract the loss of phase margin by feeding the high frequency component of the output signal back to the amplifier's inverting input, thereby preserving phase margin in the overall feedback loop.

Capacitive load driving capability is enhanced by using a pullup resistor to V^+ ( ). Typically a pullup resistor conducting 500 µA or more will significantly improve capacitive load responses. The value of the pullup resistor must be determined based on the current sinking capability of the amplifier with respect to the desired output swing. Open loop gain of the amplifier can also be affected by the pullup resistor (see Electrical Characteristics).

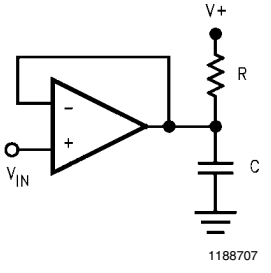

FIGURE 3. Compensating for Large Capacitive Loads with a Pullup Resistor

PRINTED-CIRCUIT-BOARD LAYOUT FOR HIGH-IMPEDANCE WORK

It is generally recognized that any circuit which must operate with less than 1000 pA of leakage current requires special layout of the PC board. When one wishes to take advantage of the ultra-low bias current of the LMC6001, typically less than 10 fA, it is essential to have an excellent layout. Fortunately, the techniques of obtaining low leakages are quite simple. First, the user must not ignore the surface leakage of the PC board, even though it may sometimes appear acceptably low, because under conditions of high humidity or dust or contamination, the surface leakage will be appreciable.

To minimize the effect of any surface leakage, lay out a ring of foil completely surrounding the LMC6001's inputs and the terminals of capacitors, diodes, conductors, resistors, relay terminals, etc., connected to the op-amp's inputs, as in . To have a significant effect, guard rings should be placed on both the top and bottom of the PC board. This PC foil must then be connected to a voltage which is at the same voltage as the amplifier inputs, since no leakage current can flow between two points at the same potential. For example, a PC board trace-to-pad resistance of $10^{12}\Omega$, which is normally considered a very large resistance, could leak 5 pA if the trace were a 5V bus adjacent to the pad of the input.

This would cause a 500 times degradation from the LMC6001's actual performance. If a guard ring is used and held within 1 mV of the inputs, then the same resistance of $10^{12}\Omega$ will only cause 10 fA of leakage current. Even this small amount of leakage will degrade the extremely low input current performance of the LMC6001. See for typical connections of guard rings for standard op-amp configurations.

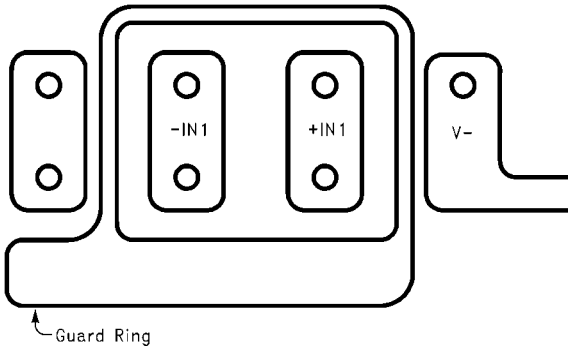

FIGURE 4. Examples of Guard Ring in PC Board Layout

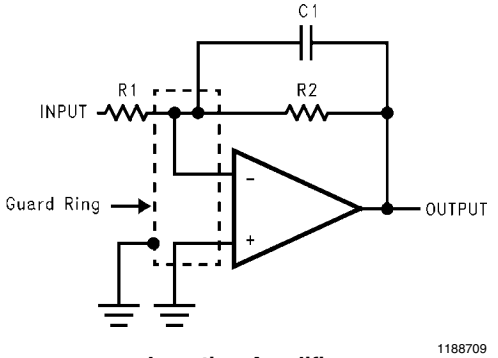

Inverting Amplifier

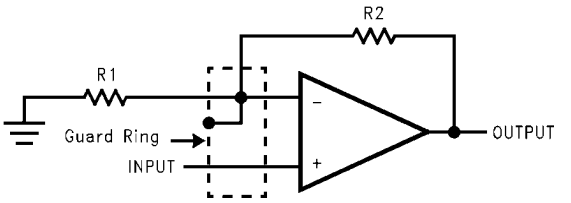

Non-Inverting Amplifier

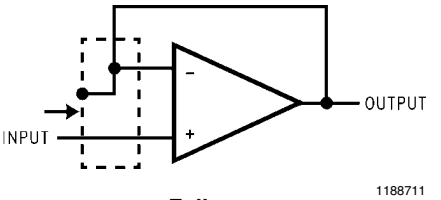

Follower

FIGURE 5. Typical Connections of Guard Rings

The designer should be aware that when it is inappropriate to lay out a PC board for the sake of just a few circuits, there is another technique which is even better than a guard ring on a PC board: Don't insert the amplifier's input pin into the board at all, but bend it up in the air and use only air as an insulator. Air is an excellent insulator. In this case you may have to forego some of the advantages of PC board construction, but the advantages are sometimes well worth the effort of using point-to-point up-in-the-air wiring. See .

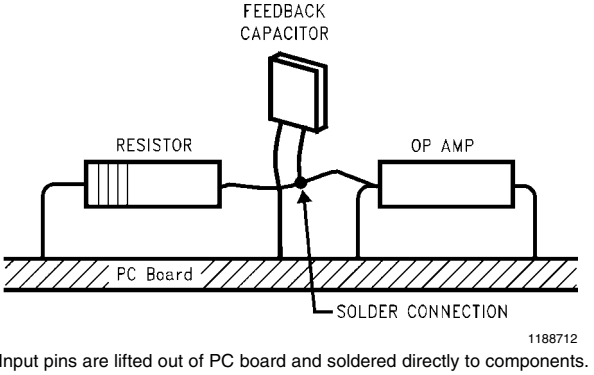

(Input pins are lifted out of PC board and soldered directly to components. All other pins connected to PC board).

FIGURE 6. Air Wiring

Another potential source of leakage that might be overlooked is the device package. When the LMC6001 is manufactured, the device is always handled with conductive finger cots. This is to assure that salts and skin oils do not cause leakage paths on the surface of the package. We recommend that these same precautions be adhered to, during all phases of inspection, test and assembly.

LATCHUP

CMOS devices tend to be susceptible to latchup due to their internal parasitic SCR effects. The (I/O) input and output pins look similar to the gate of the SCR. There is a minimum current required to trigger the SCR gate lead. The LMC6001 is designed to withstand 100 mA surge current on the I/O pins. Some resistive method should be used to isolate any capacitance from supplying excess current to the I/O pins. In addition, like an SCR, there is a minimum holding current for any

latchup mode. Limiting current to the supply pins will also inhibit latchup susceptibility.

Typical Applications

The extremely high input resistance, and low power consumption, of the LMC6001 make it ideal for applications that require battery-powered instrumentation amplifiers. Examples of these types of applications are hand-held pH probes, analytic medical instruments, electrostatic field detectors and gas chromotographs.

TWO OPAMP, TEMPERATURE COMPENSATED pH PROBE AMPLIFIER

The signal from a pH probe has a typical resistance between 10 MΩ and 1000 MΩ. Because of this high value, it is very important that the amplifier input currents be as small as possible. The LMC6001 with less than 25 fA input current is an ideal choice for this application.

The theoretical output of the standard Ag/AgCl pH probe is 59.16 mV/pH at 25°C with 0V out at a pH of 7.00. This output is proportional to absolute temperature. To compensate for this, a temperature compensating resistor, R1, is placed in the feedback loop. This cancels the temperature dependence of the probe. This resistor must be mounted where it will be at the same temperature as the liquid being measured.

The LMC6001 amplifies the probe output providing a scaled voltage of ±100 mV/pH from a pH of 7. The second opamp, a micropower LMC6041 provides phase inversion and offset so that the output is directly proportional to pH, over the full range of the probe. The pH reading can now be directly displayed on a low cost, low power digital panel meter. Total current consumption will be about 1 mA for the whole system.

The micropower dual operational amplifier, LMC6042, would optimize power consumption but not offer these advantages:

1. The LMC6001A guarantees a 25 fA limit on input current at 25°C.
2. The input ESD protection diodes in the LMC6042 are only rated at 500V while the LMC6001 has much more robust protection that is rated at 2000V.

The setup and calibration is simple with no interactions to cause problems.

1. Disconnect the pH probe and with R3 set to about mid-range and the noninverting input of the LMC6001 grounded, adjust R8 until the output is 700 mV.
2. Apply –414.1 mV to the noninverting input of the LMC6001. Adjust R3 for and output of 1400 mV. This completes the calibration. As real pH probes may not perform exactly to theory, minor gain and offset adjustments should be made by trimming while measuring a precision buffer solution.

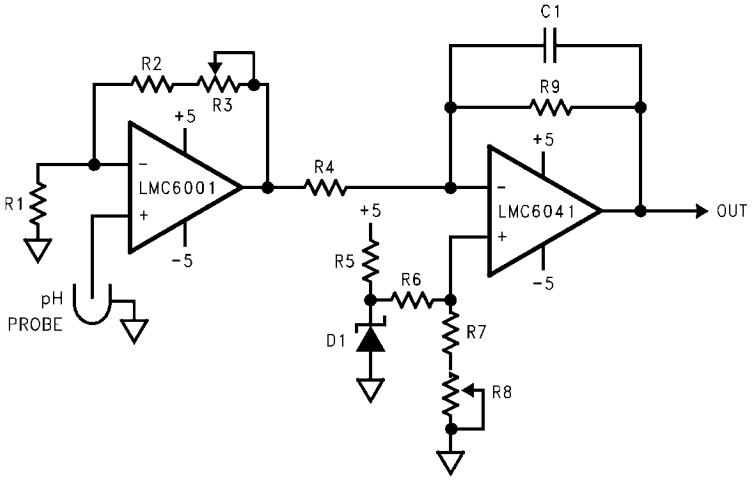

R1 100k + 3500 ppm/°C ( )
R2 68.1k
R3, 8 5k
R4, 9 100k
R5 36.5k
R6 619k
R7 97.6k
D1 LM4040D1Z-2.5
C1 2.2 µF

Note 12: (Micro-ohm style 137 or similar)

FIGURE 7. pH Probe Amplifier

ULTRA-LOW INPUT CURRENT INSTRUMENTATION AMPLIFIER

shows an instrumentation amplifier that features high differential and common mode input resistance (>10^{14}Ω), 0.01% gain accuracy at A_V = 1000, excellent CMRR with 1 MΩ imbalance in source resistance. Input current is less than 20 fA and offset drift is less than 2.5 µV/°C. R_2 provides a simple means of adjusting gain over a wide range without degrading CMRR. R_7 is an initial trim used to maximize CMRR without using super precision matched resistors. For good CMRR over temperature, low drift resistors should be used.

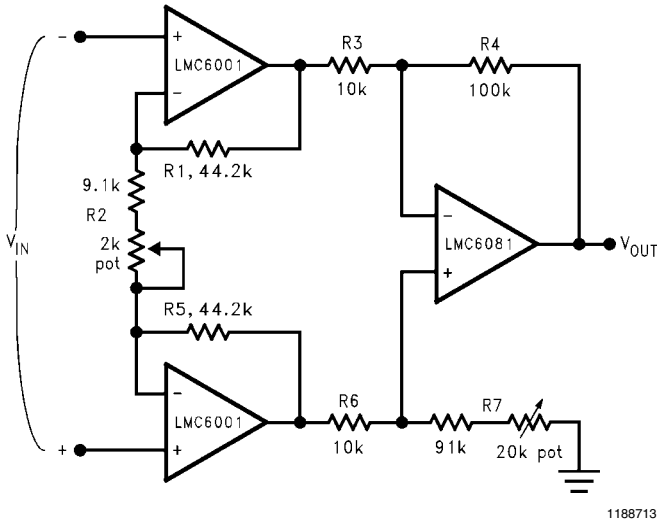

If $R_1 = R_5$, $R_3 = R_6$, and $R_4 = R_7$; then

$$\frac{V_{OUT}}{V_{IN}} = \frac{R_2 + 2R_1}{R_2} \times \frac{R_4}{R_3}$$

$A_V \approx 100$ for circuit shown ($R_2 = 9.85k$).

FIGURE 8. Instrumentation Amplifier

Physical Dimensions inches (millimeters) unless otherwise noted

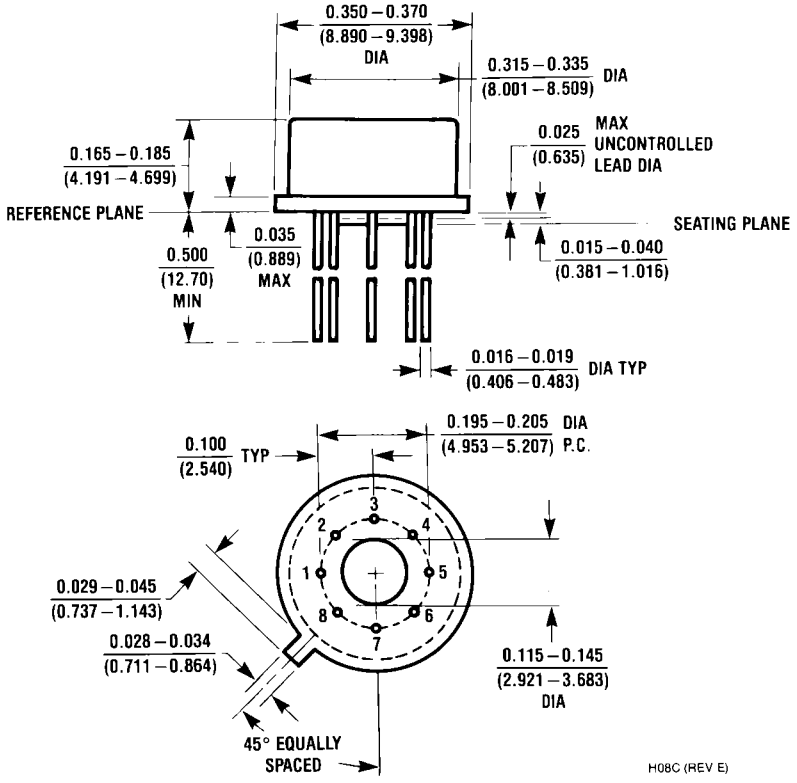

8-Pin Metal Can Package (H)
NS Package Number H08C

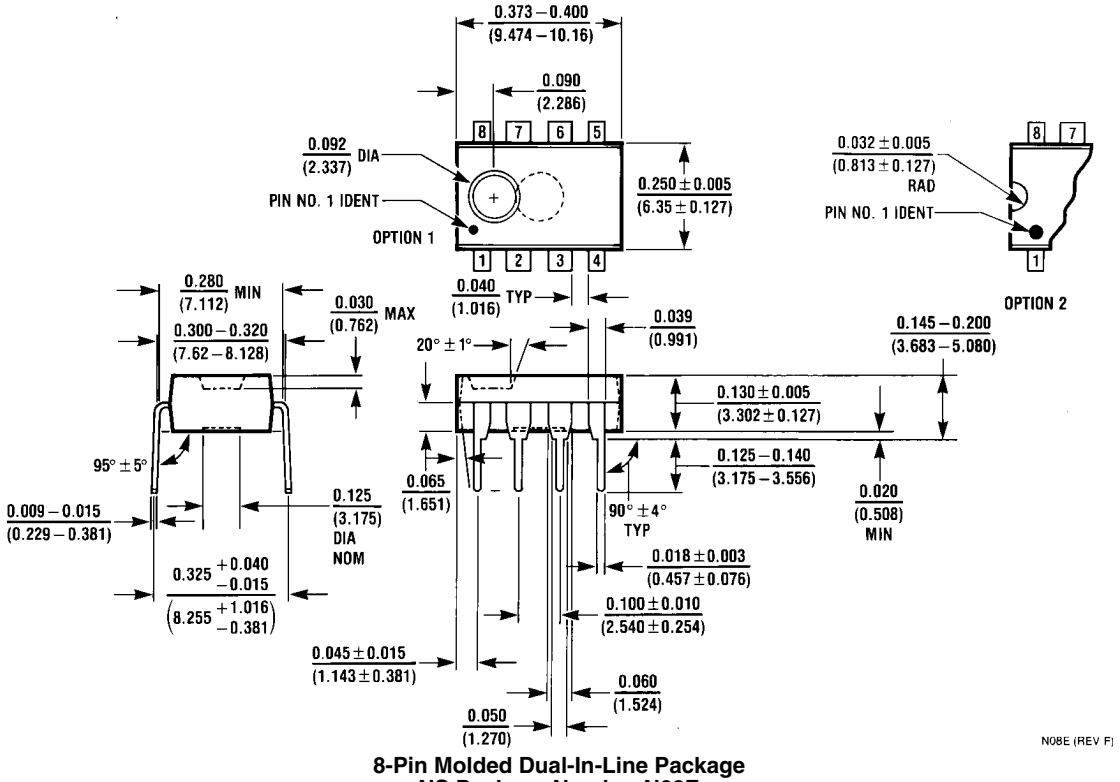

8-Pin Molded Dual-In-Line Package
NS Package Number N08E

Notes

Notes

For more National Semiconductor product information and proven design tools, visit the following Web sites at:

Products		Design Support	
Amplifiers	www.national.com/amplifiers	WEBENCH® Tools	www.national.com/webench
Audio	www.national.com/audio	App Notes	www.national.com/appnotes
Clock and Timing	www.national.com/timing	Reference Designs	www.national.com/refdesigns
Data Converters	www.national.com/adc	Samples	www.national.com/samples
Interface	www.national.com/interface	Eval Boards	www.national.com/evalboards
LVDS	www.national.com/lvds	Packaging	www.national.com/packaging
Power Management	www.national.com/power	Green Compliance	www.national.com/quality/green
Switching Regulators	www.national.com/switchers	Distributors	www.national.com/contacts
LDOs	www.national.com/ldo	Quality and Reliability	www.national.com/quality
LED Lighting	www.national.com/led	Feedback/Support	www.national.com/feedback
Voltage Reference	www.national.com/vref	Design Made Easy	www.national.com/easy
PowerWise® Solutions	www.national.com/powerwise	Solutions	www.national.com/solutions
Serial Digital Interface (SDI)	www.national.com/sdi	Mil/Aero	www.national.com/milaero
Temperature Sensors	www.national.com/tempsensors	SolarMagic™	www.national.com/solarmagic
Wireless (PLL/VCO)	www.national.com/wireless	PowerWise® Design University	www.national.com/training

THE CONTENTS OF THIS DOCUMENT ARE PROVIDED IN CONNECTION WITH NATIONAL SEMICONDUCTOR CORPORATION ("NATIONAL") PRODUCTS. NATIONAL MAKES NO REPRESENTATIONS OR WARRANTIES WITH RESPECT TO THE ACCURACY OR COMPLETENESS OF THE CONTENTS OF THIS PUBLICATION AND RESERVES THE RIGHT TO MAKE CHANGES TO SPECIFICATIONS AND PRODUCT DESCRIPTIONS AT ANY TIME WITHOUT NOTICE. NO LICENSE, WHETHER EXPRESS, IMPLIED, ARISING BY ESTOPPEL OR OTHERWISE, TO ANY INTELLECTUAL PROPERTY RIGHTS IS GRANTED BY THIS DOCUMENT.

TESTING AND OTHER QUALITY CONTROLS ARE USED TO THE EXTENT NATIONAL DEEMS NECESSARY TO SUPPORT NATIONAL'S PRODUCT WARRANTY. EXCEPT WHERE MANDATED BY GOVERNMENT REQUIREMENTS, TESTING OF ALL PARAMETERS OF EACH PRODUCT IS NOT NECESSARILY PERFORMED. NATIONAL ASSUMES NO LIABILITY FOR APPLICATIONS ASSISTANCE OR BUYER PRODUCT DESIGN. BUYERS ARE RESPONSIBLE FOR THEIR PRODUCTS AND APPLICATIONS USING NATIONAL COMPONENTS. PRIOR TO USING OR DISTRIBUTING ANY PRODUCTS THAT INCLUDE NATIONAL COMPONENTS, BUYERS SHOULD PROVIDE ADEQUATE DESIGN, TESTING AND OPERATING SAFEGUARDS.

EXCEPT AS PROVIDED IN NATIONAL'S TERMS AND CONDITIONS OF SALE FOR SUCH PRODUCTS, NATIONAL ASSUMES NO LIABILITY WHATSOEVER, AND NATIONAL DISCLAIMS ANY EXPRESS OR IMPLIED WARRANTY RELATING TO THE SALE AND/OR USE OF NATIONAL PRODUCTS INCLUDING LIABILITY OR WARRANTIES RELATING TO FITNESS FOR A PARTICULAR PURPOSE, MERCHANTABILITY, OR INFRINGEMENT OF ANY PATENT, COPYRIGHT OR OTHER INTELLECTUAL PROPERTY RIGHT.

LIFE SUPPORT POLICY

NATIONAL'S PRODUCTS ARE NOT AUTHORIZED FOR USE AS CRITICAL COMPONENTS IN LIFE SUPPORT DEVICES OR SYSTEMS WITHOUT THE EXPRESS PRIOR WRITTEN APPROVAL OF THE CHIEF EXECUTIVE OFFICER AND GENERAL COUNSEL OF NATIONAL SEMICONDUCTOR CORPORATION. As used herein:

Life support devices or systems are devices which (a) are intended for surgical implant into the body, or (b) support or sustain life and whose failure to perform when properly used in accordance with instructions for use provided in the labeling can be reasonably expected to result in a significant injury to the user. A critical component is any component in a life support device or system whose failure to perform can be reasonably expected to cause the failure of the life support device or system or to affect its safety or effectiveness.

National Semiconductor and the National Semiconductor logo are registered trademarks of National Semiconductor Corporation. All other brand or product names may be trademarks or registered trademarks of their respective holders.

Copyright© 2009 National Semiconductor Corporation

For the most current product information visit us at www.national.com

National Semiconductor Americas Technical Support Center
Email: support@nsc.com
Tel: 1-800-272-9959

National Semiconductor Europe Technical Support Center
Email: europe.support@nsc.com

National Semiconductor Asia Pacific Technical Support Center
Email: ap.support@nsc.com

National Semiconductor Japan Technical Support Center
Email: jpn.feedback@nsc.com

IMPORTANT NOTICE

Texas Instruments Incorporated and its subsidiaries (TI) reserve the right to make corrections, modifications, enhancements, improvements, and other changes to its products and services at any time and to discontinue any product or service without notice. Customers should obtain the latest relevant information before placing orders and should verify that such information is current and complete. All products are sold subject to TI's terms and conditions of sale supplied at the time of order acknowledgment.

TI warrants performance of its hardware products to the specifications applicable at the time of sale in accordance with TI's standard warranty. Testing and other quality control techniques are used to the extent TI deems necessary to support this warranty. Except where mandated by government requirements, testing of all parameters of each product is not necessarily performed.

TI assumes no liability for applications assistance or customer product design. Customers are responsible for their products and applications using TI components. To minimize the risks associated with customer products and applications, customers should provide adequate design and operating safeguards.

TI does not warrant or represent that any license, either express or implied, is granted under any TI patent right, copyright, mask work right, or other TI intellectual property right relating to any combination, machine, or process in which TI products or services are used. Information published by TI regarding third-party products or services does not constitute a license from TI to use such products or services or a warranty or endorsement thereof. Use of such information may require a license from a third party under the patents or other intellectual property of the third party, or a license from TI under the patents or other intellectual property of TI.

Reproduction of TI information in TI data books or data sheets is permissible only if reproduction is without alteration and is accompanied by all associated warranties, conditions, limitations, and notices. Reproduction of this information with alteration is an unfair and deceptive business practice. TI is not responsible or liable for such altered documentation. Information of third parties may be subject to additional restrictions.

Resale of TI products or services with statements different from or beyond the parameters stated by TI for that product or service voids all express and any implied warranties for the associated TI product or service and is an unfair and deceptive business practice. TI is not responsible or liable for any such statements.

TI products are not authorized for use in safety-critical applications (such as life support) where a failure of the TI product would reasonably be expected to cause severe personal injury or death, unless officers of the parties have executed an agreement specifically governing such use. Buyers represent that they have all necessary expertise in the safety and regulatory ramifications of their applications, and acknowledge and agree that they are solely responsible for all legal, regulatory and safety-related requirements concerning their products and any use of TI products in such safety-critical applications, notwithstanding any applications-related information or support that may be provided by TI. Further, Buyers must fully indemnify TI and its representatives against any damages arising out of the use of TI products in such safety-critical applications.

TI products are neither designed nor intended for use in military/aerospace applications or environments unless the TI products are specifically designated by TI as military-grade or "enhanced plastic." Only products designated by TI as military-grade meet military specifications. Buyers acknowledge and agree that any such use of TI products which TI has not designated as military-grade is solely at the Buyer's risk, and that they are solely responsible for compliance with all legal and regulatory requirements in connection with such use.

TI products are neither designed nor intended for use in automotive applications or environments unless the specific TI products are designated by TI as compliant with ISO/TS 16949 requirements. Buyers acknowledge and agree that, if they use any non-designated products in automotive applications, TI will not be responsible for any failure to meet such requirements.

Following are URLs where you can obtain information on other Texas Instruments products and application solutions:

Products		**Applications**	
Audio	www.ti.com/audio	Communications and Telecom	www.ti.com/communications
Amplifiers	amplifier.ti.com	Computers and Peripherals	www.ti.com/computers
Data Converters	dataconverter.ti.com	Consumer Electronics	www.ti.com/consumer-apps
DLP® Products	www.dlp.com	Energy and Lighting	www.ti.com/energy
DSP	dsp.ti.com	Industrial	www.ti.com/industrial
Clocks and Timers	www.ti.com/clocks	Medical	www.ti.com/medical
Interface	interface.ti.com	Security	www.ti.com/security
Logic	logic.ti.com	Space, Avionics and Defense	www.ti.com/space-avionics-defense
Power Mgmt	power.ti.com	Transportation and Automotive	www.ti.com/automotive
Microcontrollers	microcontroller.ti.com	Video and Imaging	www.ti.com/video
RFID	www.ti-rfid.com		
OMAP Mobile Processors	www.ti.com/omap		
Wireless Connectivity	www.ti.com/wirelessconnectivity		
	TI E2E Community Home Page		e2e.ti.com

Mailing Address: Texas Instruments, Post Office Box 655303, Dallas, Texas 75265
Copyright © 2011, Texas Instruments Incorporated