LMC6044 CMOS Quad Micropower Operational Amplifier

Check for Samples: LMC6044

FEATURES

- **Low Supply Current: 10 µA/Amp (Typ)**
- **Operates from 4.5V to 15.5V Single Supply**
- **Ultra Low Input Current: 2 fA (Typ)**
- **Rail-to-Rail Output Swing**
- **Input Common-Mode Range Includes Ground**

APPLICATIONS

- **Battery Monitoring and Power Conditioning**
- **Photodiode and Infrared Detector Preamplifier**
- **Silicon Based Transducer Systems**
- **Hand-Held Analytic Instruments**
- **pH Probe Buffer Amplifier**
- **Fire and Smoke Detection Systems**
- **Charge Amplifier for Piezoelectric Transducers**

DESCRIPTION

Ultra-low power consumption and low input-leakage current are the hallmarks of the LMC6044. Providing input currents of only 2 fA typical, the LMC6044 can operate from a single supply, has output swing extending to each supply rail, and an input voltage range that includes ground.

The LMC6044 is ideal for use in systems requiring ultra-low power consumption. In addition, the insensitivity to latch-up, high output drive, and output swing to ground without requiring external pull-down resistors make it ideal for single-supply battery-powered systems.

Other applications for the LMC6044 include bar code reader amplifiers, magnetic and electric field detectors, and hand-held electrometers.

This device is built with National's advanced Double-Poly Silicon-Gate CMOS process.

See the LMC6041 for a single, and the LMC6042 for a dual amplifier with these features.

Connection Diagram

14-Pin PDIP/SOIC

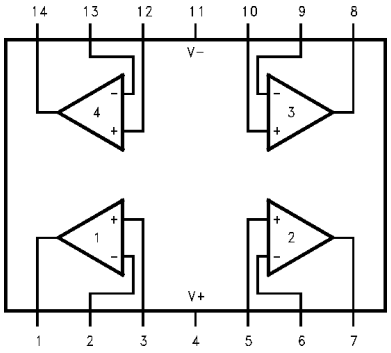

Instrumentation Amplifier

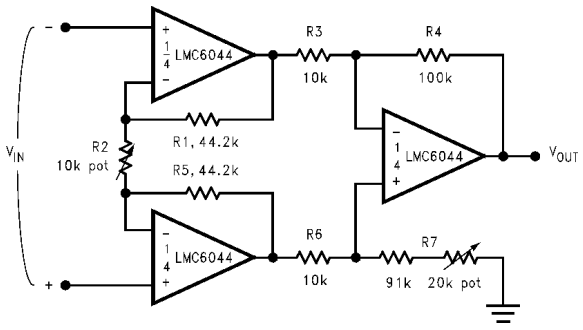

These devices have limited built-in ESD protection. The leads should be shorted together or the device placed in conductive foam during storage or handling to prevent electrostatic damage to the MOS gates.

Please be aware that an important notice concerning availability, standard warranty, and use in critical applications of Texas Instruments semiconductor products and disclaimers thereto appears at the end of this data sheet.

All trademarks are the property of their respective owners.

PRODUCTION DATA information is current as of publication date. Products conform to specifications per the terms of the Texas Instruments standard warranty. Production processing does not necessarily include testing of all parameters.

Copyright © 1994–2013, Texas Instruments Incorporated

Absolute Maximum Ratings(1)(2)

Differential Input Voltage	±Supply Voltage
Supply Voltage ($V^+ - V^-$)	16V
Output Short Circuit to V^+	See(3)
Output Short Circuit to V^-	See(4)
Lead Temperature (Soldering, 10 sec.)	260°C
Current at Input Pin	±5 mA
Current at Output Pin	±18 mA
Current at Power Supply Pin	35 mA
Power Dissipation	See(5)
Storage Temperature Range	−65°C to +150°C
Junction Temperature(5)	110°C
ESD Tolerance(6)	500V
Voltage at I/O Pin (V^+)	+0.3V, (V^-) −0.3V

(1) Absolute Maximum Ratings indicate limts beyond which damage to the device may occur. Operating Ratings indicate conditions for which the device is intended to be functional, but do not guarantee specific performance limits. For guaranteed specifications and test conditions, see the Electrical Characteristics. The guaranteed specifications apply only for the test conditions listed.
(2) If Military/Aerospace specified devices are required, please contact the Texas Instruments Sales Office/Distributors for availability and specifications.
(3) Do not connect output to V^+ when V^+ is greater than 13V or reliability may be adversely affected.
(4) Applies to both single-supply and split-supply operation. Continuous short circuit operation at elevated ambient temperature can result in exceeding the maximum allowed junction temperature of 110°C. Output currents in excess of ±30 mA over long term may adversely affect reliability.
(5) The maximum power dissipation is a function of $T_{J(max)}$, θ_{JA}, and T_A. The maximum allowable power dissipation at any ambient temperature is $P_D = (T_{J(max)} - T_A)/\theta_{JA}$.
(6) Human body model, 1.5 kΩ in series with 100 pF.

Operating Ratings

Temperature Range	LMC6044AI, LMC6044I	$-40°C \le T_J \le +85°C$
	Supply Voltage	$4.5V \le V+ \le 15.5V$
Thermal Resistance (θ_{JA})(1)	14-Pin PDIP	85°C/W
	14-Pin SOIC	115°C/W
Power Dissipation		See(2)

(1) All numbers apply for packages soldered directly into a PC poard.
(2) For operating at elevated temperatures, the device must be derated based on the thermal resistance θ_{JA} with $P_D = (T_J - T_A)/\theta_{JA}$.

Copyright © 1994–2013, Texas Instruments Incorporated

Electrical Characteristics

Unless otherwise specified, all limits guaranteed for $T_A = T_J = 25°C$. **Boldface** limits apply at the temperature extremes. $V^+ = 5V$, $V^- = 0V$, $V_{CM} = 1.5V$, $V_O = V^+/2$, and $R_L > 1M$ unless otherwise specified.

Symbol	Parameter	Conditions		Typical (1)	LMC6044AI Limit (2)	LMC6044I Limit (2)	Units (Limit)
V_{OS}	Input Offset Voltage			1	3	6	mV
					3.3	**6.3**	max
TCV_{OS}	Input Offset Voltage Average Drift			1.3			µV/°C
I_B	Input Bias Current			0.002	**4**	**4**	pA max
I_{OS}	Input Offset Current			0.001	**2**	**2**	
R_{IN}	Input Resistance			>10			TeraΩ
CMRR	Common Mode Rejection Ratio	$0V \le V_{CM} \le 12.0V$ $V^+ = 15V$		75	68	62	dB
					66	**60**	min
+PSRR	Positive Power Supply Rejection Ratio	$5V \le V^+ \le 15V$ $V_O = 2.5V$		75	68	62	dB
					66	**60**	min
−PSRR	Negative Power Supply Rejection Ratio	$0V \le V^- \le -10V$ $V_O = 2.5V$		94	84	74	dB
					83	**73**	min
CMR	Input Common-Mode Voltage Range	$V^+ = 5V$ & $15V$ For CMRR ≥ 50 dB		−0.4	−0.1	−0.1	V
					0	**0**	max
				$V^+ - 1.9V$	$V^+ - 2.3V$	$V^+ - 2.3V$	V
					$\mathbf{V^+ - 2.5V}$	$\mathbf{V^+ - 2.4V}$	min
A_V	Large Signal Voltage Gain	$R_L = 100\ k\Omega$ (3)	Sourcing	1000	400	300	V/mV
					300	**200**	min
			Sinking	500	180	90	V/mV
					120	**70**	min
		$R_L = 25\ k\Omega$ (3)	Sourcing	1000	200	100	V/mV
					160	**80**	min
			Sinking	250	100	50	V/mV
					60	**40**	min
V_O	Output Swing	$V^+ = 5V$ $R_L = 100\ k\Omega$ to 2.5V		4.987	4.970	4.940	V
					4.950	**4.910**	min
				0.004	0.030	0.060	V
					0.050	**0.090**	max
		$V^+ = 5V$ $R_L = 25\ k\Omega$ to 2.5V		4.980	4.920	4.870	V
					4.870	**4.820**	min
				0.010	0.080	0.130	V
					0.130	**0.180**	max
		$V^+ = 15V$ $R_L = 100\ k\Omega$ to $V^+/2$		14.970	14.920	14.880	V
					14.880	**14.820**	min
				0.007	0.030	0.060	V
					0.050	**0.090**	max
		$V^+ = 15V$ $R_L = 25\ k\Omega$ to $V^+/2$		14.950	14.900	14.850	V
					14.850	**14.800**	min
				0.022	0.100	0.150	V
					0.150	**0.200**	max

(1) Typical Values represent the most likely parametric norm.
(2) All limits are guaranteed at room temperature (standard type face) or at operating temperature extremes (bold face type).
(3) $V^+ = 15V$, $V_{CM} = 7.5V$ and R_L connected to 7.5V. For Sourcing tests, $7.5V \le V_O \le 11.5V$. For Sinking tests, $2.5V \le V_O \le 7.5V$.

Copyright © 1994–2013, Texas Instruments Incorporated

Electrical Characteristics (continued)

Unless otherwise specified, all limits guaranteed for $T_A = T_J = 25°C$. **Boldface** limits apply at the temperature extremes. $V^+ = 5V$, $V^- = 0V$, $V_{CM} = 1.5V$, $V_O = V^+/2$, and $R_L > 1M$ unless otherwise specified.

Symbol	Parameter	Conditions	Typical (1)	LMC6044AI Limit (2)	LMC6044I Limit (2)	Units (Limit)
I_{SC}	Output Current $V^+ = 5V$	Sourcing, $V_O = 0V$	22	16	13	mA
				10	**8**	min
		Sinking, $V_O = 5V$	21	16	13	mA
				8	**8**	min
I_{SC}	Output Current $V^+ = 15V$	Sourcing, $V_O = 0V$	40	15	15	mA
				10	**10**	min
		Sinking, $V_O = 13V$ (4)	39	24	21	mA
				8	**8**	min
I_S	Supply Current	Four Amplifiers $V_O = 1.5V$	40	65	75	µA
				72	**82**	max
		Four Amplifiers $V^+ = 15V$	52	85	98	µA
				94	**107**	max

(4) Do not connect output to V^+ when V^+ is greater than 13V or reliability may be adversely affected.

AC Electrical Characteristics

Unless otherwise specified, all limits guaranteed for $T_A = T_J = 25°C$. **Boldface** limits apply at the temperature extremes. $V^+ = 5V$, $V^- = 0V$, $V_{CM} = 1.5V$, $V_O = V^+/2$, and $R_L > 1M$ unless otherwise specified.

Symbol	Parameter	Conditions	Typical (1)	LMC6044AI Limit (2)	LMC6044I Limit (2)	Units (Limit)
SR	Slew Rate	See (3)	0.02	0.015	0.010	V/µs
				0.010	**0.007**	min
GBW	Gain-Bandwidth Product		0.10			MHz
φ_m	Phase Margin		60			Deg
	Amp-to-Amp Isolation	See (4)	115			dB
e_n	Input-Referred Voltage Noise	F = 1 kHz	83			$nV/\sqrt{Hz}$
i_n	Input-Referred Current Noise	F = 1 kHz	0.0002			$pA/\sqrt{Hz}$
T.H.D.	Total Harmonic Distortion	F = 1 kHz, $A_V = -5$ $R_L = 100\ k\Omega$, $V_O = 2\ V_{pp}$ ±5V Supply	0.01			%

(1) Typical Values represent the most likely parametric norm.
(2) All limits are guaranteed at room temperature (standard type face) or at operating temperature extremes (bold face type).
(3) $V^+ = 15V$. Connected as Voltage Follower with 10V step input. Number specified in the slower of the positive and negative slew rates.
(4) Input referred $V^+ = 15V$ and $R_L = 100\ k\Omega$ connected to $V^+/2$. Each amp excited in turn with 100 Hz to produce $V_O = 12\ V_{PP}$.

Copyright © 1994–2013, Texas Instruments Incorporated

Typical Performance Characteristics

V_S = ±7.5V, T_A = 25°C unless otherwise specified

Supply Current vs Supply Voltage

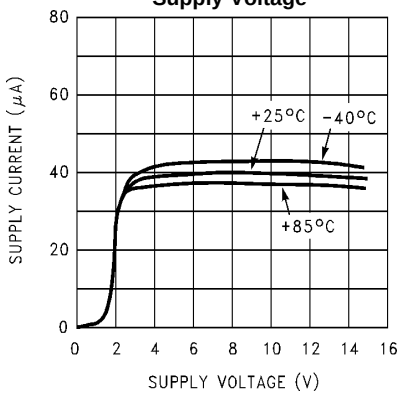

Figure 1.

Offset Voltage vs Temperature of Five Representative Units

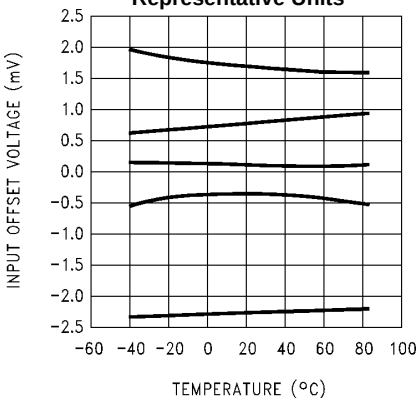

Figure 2.

Input Bias Current vs Temperature

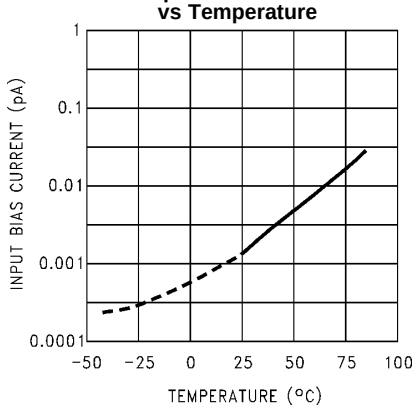

Figure 3.

Input Bias Current vs Input Common-Mode Voltage

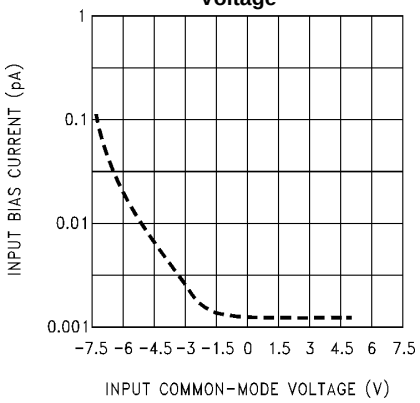

Figure 4.

Input Common-Mode Voltage Range vs Temperature

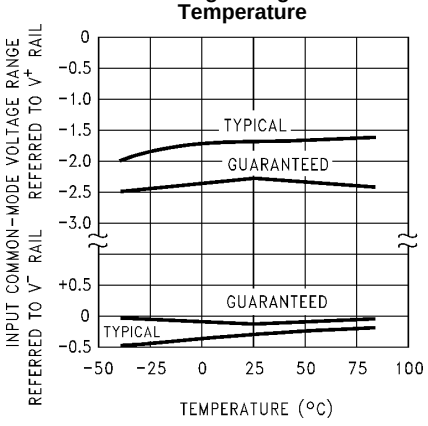

Figure 5.

Output Characteristics Current Sinking

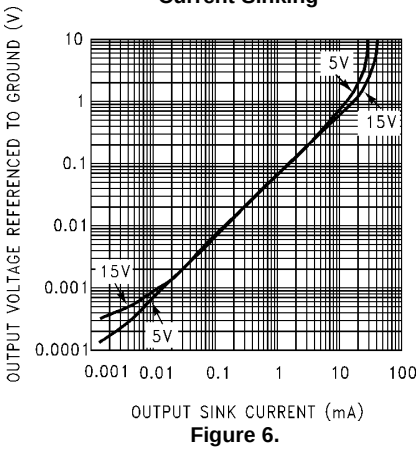

Figure 6.

Copyright © 1994–2013, Texas Instruments Incorporated

Typical Performance Characteristics (continued)

V_S = ±7.5V, T_A = 25°C unless otherwise specified

Output Characteristics Current Sourcing

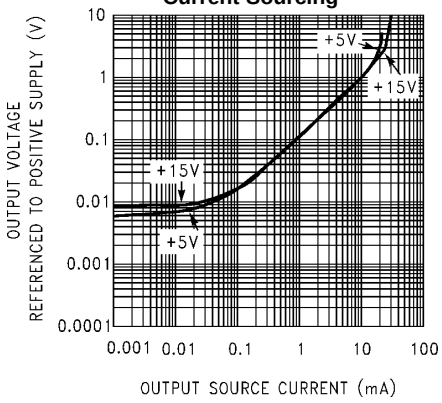

Figure 7.

Output Characteristics vs Frequency

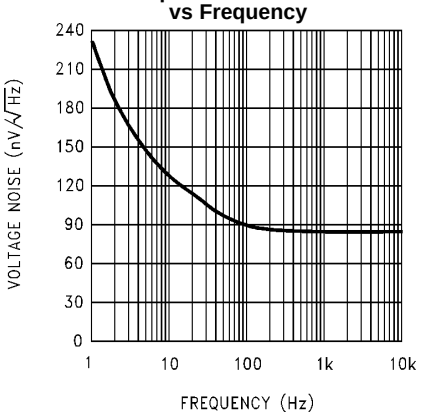

Figure 8.

Crosstalk Rejection vs Frequency

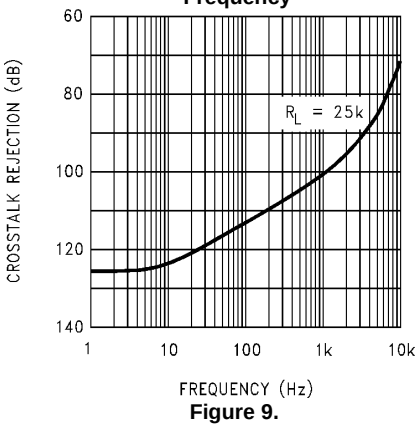

Figure 9.

CMRR vs Frequency

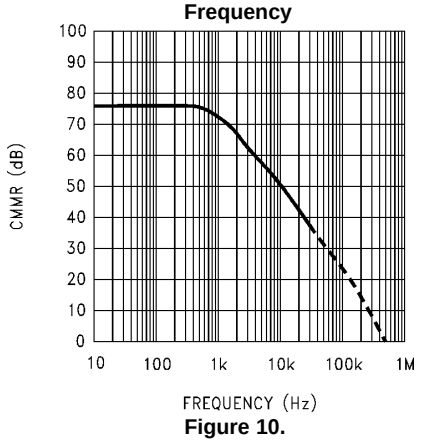

Figure 10.

CMRR vs Temperature

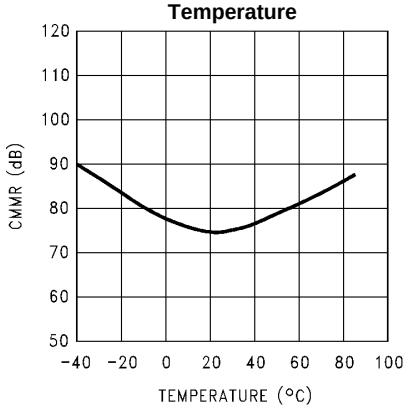

Figure 11.

Power Supply Rejection Ratio vs Frequency

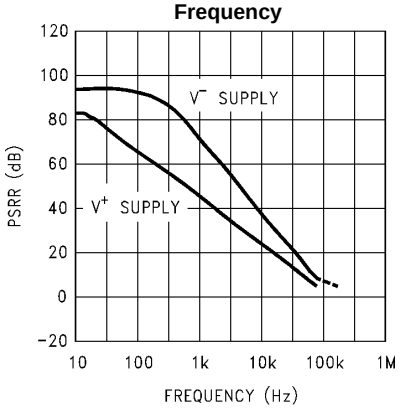

Figure 12.

Copyright © 1994–2013, Texas Instruments Incorporated

Typical Performance Characteristics (continued)

V_S = ±7.5V, T_A = 25°C unless otherwise specified

Open-Loop Voltage Gain vs Temperature

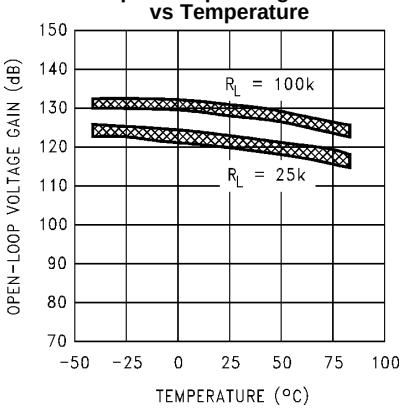

Figure 13.

Open-Loop Frequency Response

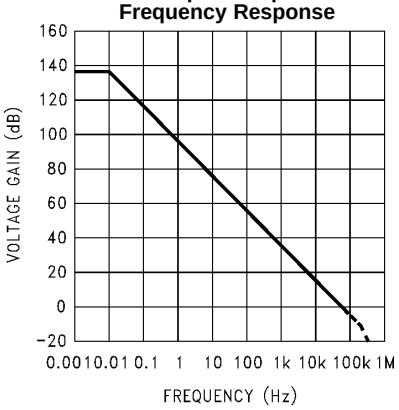

Figure 14.

Gain and Phase Responses vs Load Capacitance

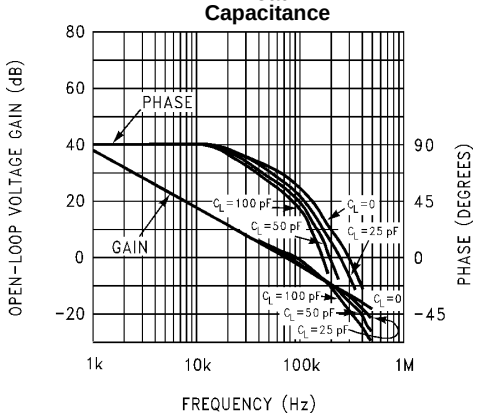

Figure 15.

Gain and Phase Responses vs Temperature

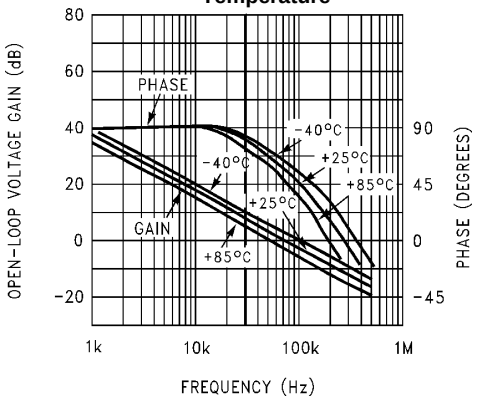

Figure 16.

Gain Error (V_{OS} vs V_{OUT})

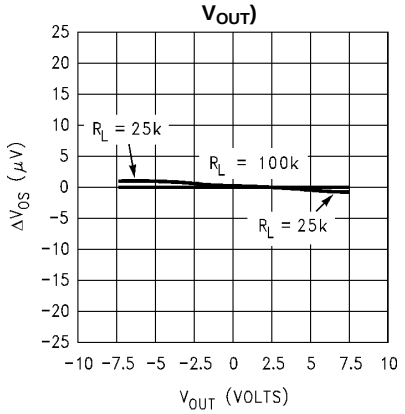

Figure 17.

Common-Mode Error vs Common-Mode Voltage of Three Representative Units

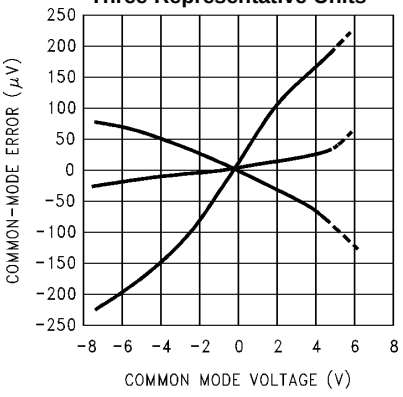

Figure 18.

Copyright © 1994–2013, Texas Instruments Incorporated

Typical Performance Characteristics (continued)

V_S = ±7.5V, T_A = 25°C unless otherwise specified

Non-Inverting Slew Rate vs Temperature

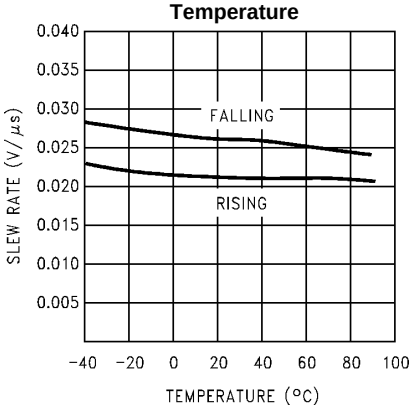

Figure 19.

Inverting Slew Rate vs Temperature

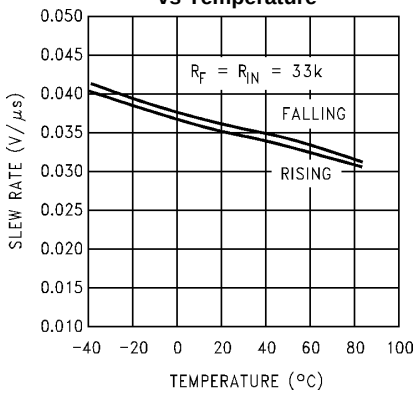

Figure 20.

Non-Inverting Large Signal Pulse Response (A_V = +1)

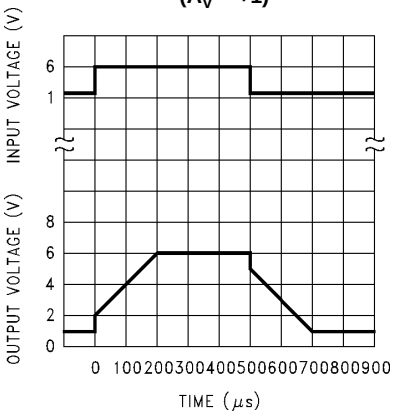

Figure 21.

Non-Inverting Small Signal Pulse Response

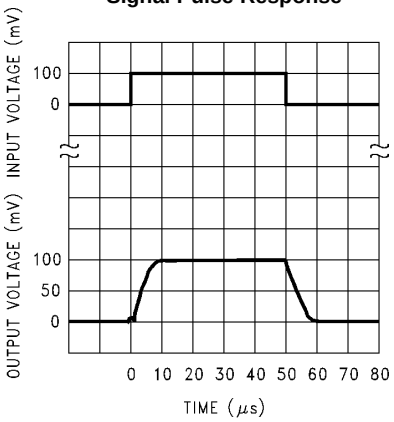

Figure 22.

Inverting Large-Signal Pulse Response

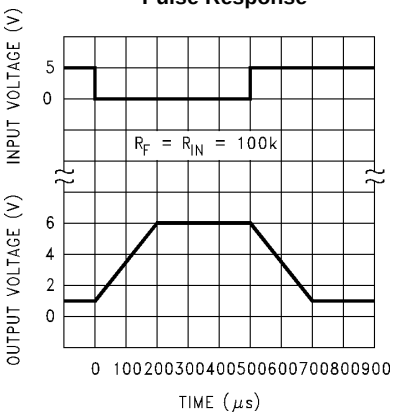

Figure 23.

Inverting Small Signal Pulse Response

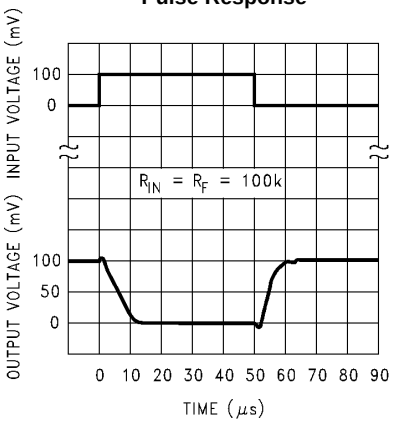

Figure 24.

Copyright © 1994–2013, Texas Instruments Incorporated

Typical Performance Characteristics (continued)

V_S = ±7.5V, T_A = 25°C unless otherwise specified

Stability vs Capacitive Load

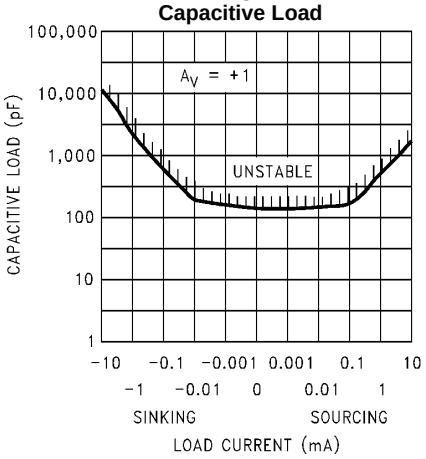

Figure 25.

Stability vs Capacitive Load

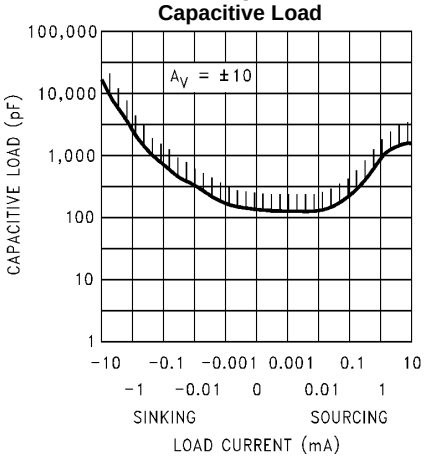

Figure 26.

Copyright © 1994–2013, Texas Instruments Incorporated

APPLICATION HINTS

AMPLIFIER TOPOLOGY

The LMC6044 incorporates a novel op-amp design topology that enables it to maintain rail to rail output swing even when driving a large load. Instead of relying on a push-pull unity gain outupt buffer stage, the output stage is taken directly from the internal integrator, which provides both low output impedance and large gain. Special feed-forward compensation design techniques are incorporated to maintain stability over a wider range of operating conditions than traditional micropower op-amps. These features make the LMC6044 both easier to design with, and provide higher speed than products typically found in this ultra-low power class.

COMPENSATING FOR INPUT CAPACITANCE

It is quite common to use large values of feedback resistance with amplifiers with ultra-low input current, like the LMC6044.

Although the LMC6044 is highly stable over a wide range of operating conditions, certain precautions must be met to achieve the desired pulse response when a large feedback resistor is used. Large feedback resistors and even small values of input capacitance, due to transducers, photodiodes, and circuits board parasitics, reduce phase margins.

When high input impedance are demanded, guarding of the LMC6044 is suggested. Guarding input lines will not only reduce leakage, but lowers stray input capacitance as well. (See **PRINTED-CIRCUIT-BOARD LAYOUT FOR HIGH-IMPEDANCE WORK.**)

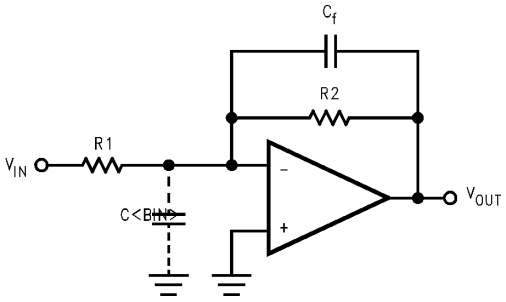

Figure 27. Canceling the Effect of Input Capacitance

The effect of input capacitance can be compensated for by adding a capacitor. Adding a capacitor, C_f, around the feedback resistor (as in Figure 27) such that:

$$\frac{1}{2\pi R_1 C_{IN}} \geq \frac{1}{2\pi R_2 C_f} \quad (1)$$

or

$$R_1 C_{IN} \leq R_2 C_f \quad (2)$$

Since it is often difficult to know the exact value of C_{IN}, C_f can be experimentally adjusted so that the desired pulse response is achieved. Refer to the LMC660 and the LMC662 for a more detailed discussion on compensating for input capacitance.

CAPACITIVE LOAD TOLERANCE

Direct capacitive loading will reduce the phase margin of many op-amps. A pole in the feedback loop is created by the combination of the op-amp's output impedance and the capacitive load. This pole induces phase lag at the unity-gain crossover frequency of the amplifier resulting in either an oscillatory or underdamped pulse response. With a few external components, op amps can easily indirectly drive capacitive loads, as shown in Figure 28.

Copyright © 1994–2013, Texas Instruments Incorporated

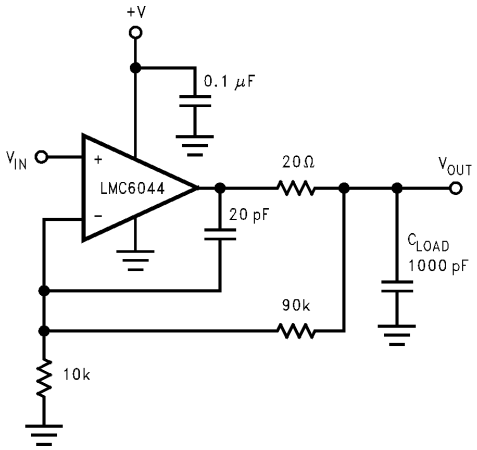

Figure 28. LMC6044 Noninverting Gain of 10 Amplifier, Compensated to Handle Capacitive Loads

In the circuit of Figure 28, R1 and C1 serve to counteract the loss of phase margin by feeding the high frequency component of the output signal back to the amplifier's inverting input, thereby preserving phase margin in the overall feedback loop.

Capacitive load driving capability is enhanced by using a pull up resistor to V^+ (Figure 29). Typically, a pull up resistor conducting 10 μA or more will significantly improve capacitive load responses. The value of the pull up resistor must be determined based on the current sinking capability of the amplifier with respect to the desired output swing. Open loop gain of the amplifier can also be affected by the pull up resistor (see Electrical Characteristics).

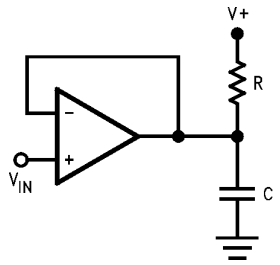

Figure 29. Compensating for Large Capacitive Loads with a Pull Up Resistor

PRINTED-CIRCUIT-BOARD LAYOUT FOR HIGH-IMPEDANCE WORK

It is generally recognized that any circuit which must operate with less than 1000 pA of leakage current requires special layout of the PC board. When one wishes to take advantage of the ultra-low bias current of the LMC6044, typically less than 2 fA, it is essential to have an excellent layout. Fortunately, the techniques of obtaining low leakages are quite simple. First, the user must not ignore the surface leakage of the PC board, even though it may sometimes appear acceptably low, because under conditions of high humidity or dust or contamination, the surface leakage will be appreciable.

Copyright © 1994–2013, Texas Instruments Incorporated

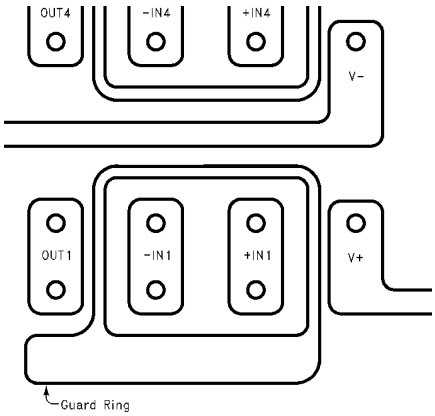

Figure 30. Example of Guard Ring in P.C. Board Layout

To minimize the effect of any surface leakage, lay out a ring of foil completely surrounding the LMC6044's inputs and the terminals of capacitors, diodes, conductors, resistors, relay terminals, etc. connected to the op-amp's inputs, as in Figure 30. To have a significant effect, guard rings should be placed on both the top and bottom of the PC board. This PC foil must then be connected to a voltage which is at the same voltage as the amplifer inputs, since no leakage current can flow between two points at the same potential. For example, a PC board trace-to-pad resistance of $10^{12}\Omega$, which is normally considered a very large resistance, could leak 5 pA if the trace were a 5V bus adjacent to the pad of the input. This would cause a 100 times degradation from the LMC6044's actual performance. However, if a guard ring is held within 5 mV of the inputs, then even a resistance of $10^{11}\Omega$ would cause only 0.05 pA of leakage current. See Figure 33 for typical connections of guard rings for standard op-amp configurations.

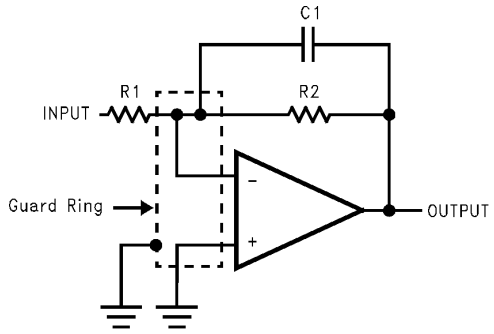

Figure 31. Inverting Amplifier Typical Connections of Guard Rings

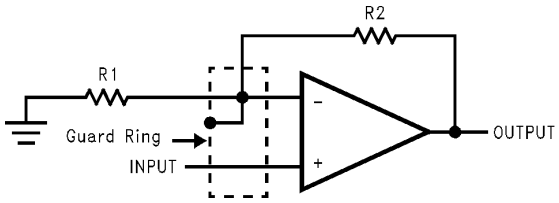

Figure 32. Non-Inverting Amplifier Typical Connections of Guard Rings

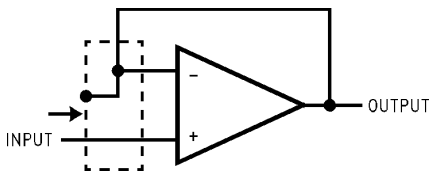

Figure 33. Follower Typical Connections of Guard Rings

Copyright © 1994–2013, Texas Instruments Incorporated

The designer should be aware that when it is inappropriate to lay out a PC board for the sake of just a few circuits, there is another technique which is even better than a guard ring on a PC board: Don't insert the amplifier's input pin into the board at all, but bend it up in the air and use only air as an insulator. Air is an excellent insulator. In this case you may have to forego some of the advantages of PC board construction, but the advantages are sometimes well worth the effort of using point-to-point up-in-the-air wiring. See Figure 34.

Typical Single-Supply Applications

($V+ = 5.0\ V_{DC}$)

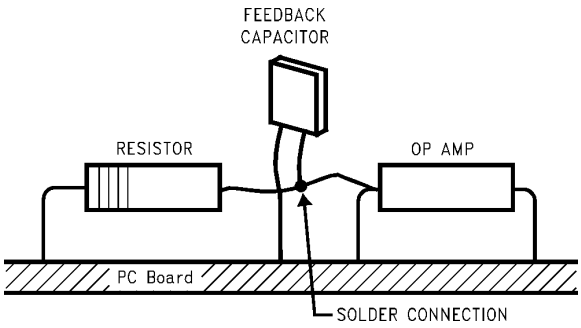

(Input pins are lifted out of PC board and soldered directly to components. All other pins connected to PC board.)

Figure 34. Air Wiring

The extremely high input impedance, and low power consumption, of the LMC6044 make it ideal for applications that require battery-powered instrumentation amplifiers. Examples of these type of applications are hand-held pH probes, analytic medical instruments, magnetic field detectors, gas detectors, and silicon based pressure transducers.

The circuit in Figure 35 is recommended for applications where the common-mode input range is relatively low and the differential gain will be in the range of 10 to 1000. This two op-amp instrumentation amplifier features an independent adjustment of the gain and common-mode rejection trim, and a total quiescent supply current of less than 40 µA. To maintain ultra-high input impedance, it is advisable to use ground rings and consider PC board layout an important part of the overall system design (see PRINTED-CIRCUIT-BOARD LAYOUT FOR HIGH-IMPEDANCE WORK). Referring to Figure 35, the input voltages are represented as a common-mode input V_{CM} plus a differential input V_D. Rejection of the common-mode component of the input is accomplished by making the ratio of R1/R2 equal to R3/R4. So that where,

$$\frac{R3}{R4} = \frac{R2}{R1}$$

$$V_{OUT} = \frac{R4}{R3}\left(1 + \frac{R3}{R4} + \frac{R2 + R3}{RO}\right) V_D \quad (3)$$

A suggested design guideline is to minimize the difference of value between R1 through R4. This will often result in improved resistor tempco, amplifier gain, and CMRR over temperature. If RN = R1 = R2 = R3 = R4 then the gain equation can be simplified:

$$V_{OUT} = 2\left(1 + \frac{RN}{RO}\right) V_D \quad (4)$$

Due to the “zero-in, zero-out” performance of the LMC6044, and output swing rail-rail, the dynamic range is only limited to the input common-mode range of 0V to V_S–2.3V, worst case at room temperature. This feature of the LMC6044 makes it an ideal choice for low-power instrumentation systems.

A complete instrumentation amplifier designed for a gain of 100 is shown in Figure 36. Provisions have been made for low sensitivity trimming of CMRR and gain.

Copyright © 1994–2013, Texas Instruments Incorporated

($V+ = 5.0\ V_{DC}$)

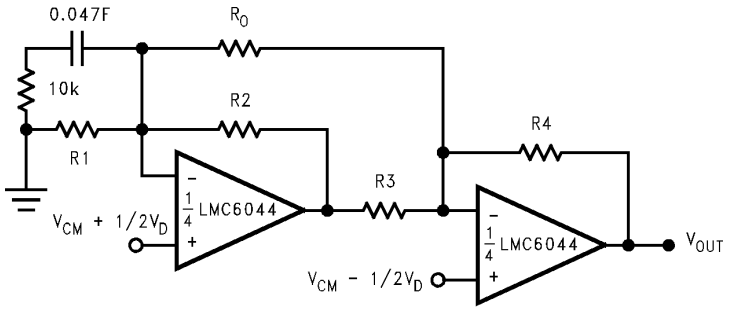

Figure 35. Two Op-Amp Instrumentation Amplifier

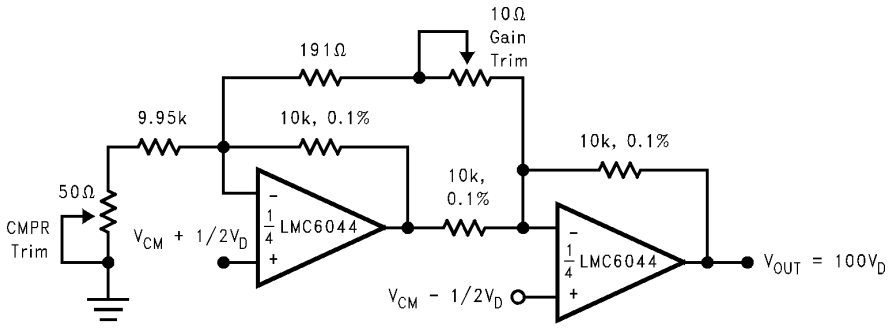

Figure 36. Low-Power Two-Op-Amp Instrumentation Amplifier

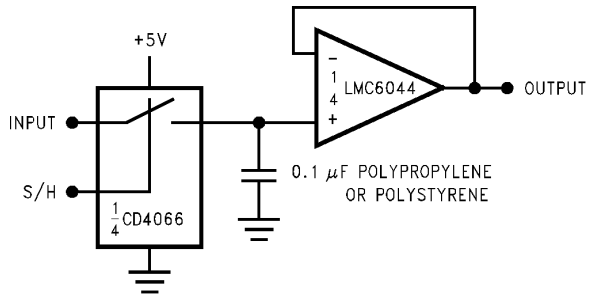

Figure 37. Low-Leakage Sample-and-Hold

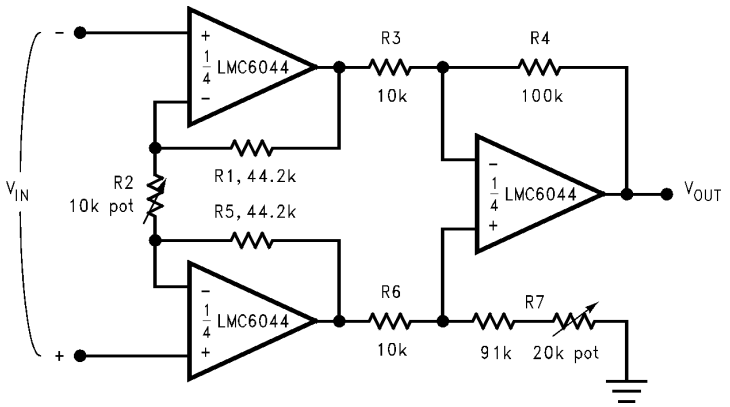

Figure 38. Instrumentation Amplifier

Copyright © 1994–2013, Texas Instruments Incorporated

($V+ = 5.0\ V_{DC}$)

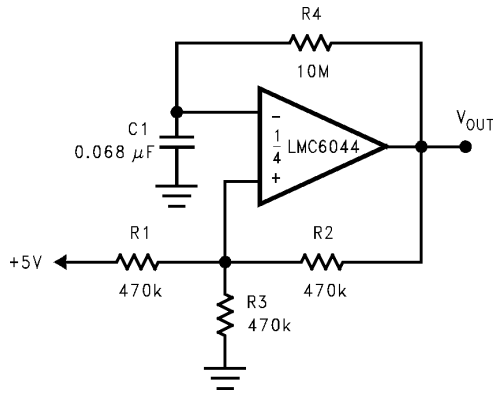

Figure 39. 1 Hz Square-Wave Oscillator

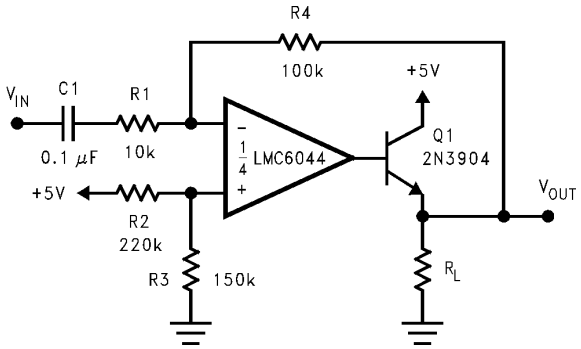

Figure 40. AC Coupled Power Amplifier

REVISION HISTORY

Changes from Revision C (March 2013) to Revision D	Page
• Changed layout of National Data Sheet to TI format	15

Copyright © 1994–2013, Texas Instruments Incorporated

PACKAGING INFORMATION

Orderable Device	Status (1)	Package Type	Package Drawing	Pins	Package Qty	Eco Plan (2)	Lead/Ball Finish	MSL Peak Temp (3)	Op Temp (°C)	Device Marking (4/5)	Samples
LMC6044AIM	ACTIVE	SOIC	D	14	55	TBD	Call TI	Call TI	-40 to 85	LMC6044 AIM	Samples
LMC6044AIM/NOPB	ACTIVE	SOIC	D	14	55	Green (RoHS & no Sb/Br)	CU SN	Level-1-260C-UNLIM	-40 to 85	LMC6044 AIM	Samples
LMC6044AIMX	ACTIVE	SOIC	D	14	2500	TBD	Call TI	Call TI	-40 to 85	LMC6044 AIM	Samples
LMC6044AIMX/NOPB	ACTIVE	SOIC	D	14	2500	Green (RoHS & no Sb/Br)	CU SN	Level-1-260C-UNLIM	-40 to 85	LMC6044 AIM	Samples
LMC6044IM	ACTIVE	SOIC	D	14	55	TBD	Call TI	Call TI	-40 to 85	LMC6044IM	Samples
LMC6044IM/NOPB	ACTIVE	SOIC	D	14	55	Green (RoHS & no Sb/Br)	CU SN	Level-1-260C-UNLIM	-40 to 85	LMC6044IM	Samples
LMC6044IMX	ACTIVE	SOIC	D	14		TBD	Call TI	Call TI	-40 to 85	LMC6044IM	Samples
LMC6044IMX/NOPB	ACTIVE	SOIC	D	14	2500	Green (RoHS & no Sb/Br)	CU SN	Level-1-260C-UNLIM	-40 to 85	LMC6044IM	Samples
LMC6044IN	ACTIVE	PDIP	NFF	14	25	TBD	Call TI	Call TI	-40 to 85	LMC6044IN	Samples
LMC6044IN/NOPB	ACTIVE	PDIP	NFF	14	25	Green (RoHS & no Sb/Br)	CU SN	Level-1-NA-UNLIM	-40 to 85	LMC6044IN	Samples

(1) The marketing status values are defined as follows:
ACTIVE: Product device recommended for new designs.
LIFEBUY: TI has announced that the device will be discontinued, and a lifetime-buy period is in effect.
NRND: Not recommended for new designs. Device is in production to support existing customers, but TI does not recommend using this part in a new design.
PREVIEW: Device has been announced but is not in production. Samples may or may not be available.
OBSOLETE: TI has discontinued the production of the device.

(2) Eco Plan - The planned eco-friendly classification: Pb-Free (RoHS), Pb-Free (RoHS Exempt), or Green (RoHS & no Sb/Br) - please check http://www.ti.com/productcontent for the latest availability information and additional product content details.
TBD: The Pb-Free/Green conversion plan has not been defined.
Pb-Free (RoHS): TI's terms "Lead-Free" or "Pb-Free" mean semiconductor products that are compatible with the current RoHS requirements for all 6 substances, including the requirement that lead not exceed 0.1% by weight in homogeneous materials. Where designed to be soldered at high temperatures, TI Pb-Free products are suitable for use in specified lead-free processes.
Pb-Free (RoHS Exempt): This component has a RoHS exemption for either 1) lead-based flip-chip solder bumps used between the die and package, or 2) lead-based die adhesive used between the die and leadframe. The component is otherwise considered Pb-Free (RoHS compatible) as defined above.
Green (RoHS & no Sb/Br): TI defines "Green" to mean Pb-Free (RoHS compatible), and free of Bromine (Br) and Antimony (Sb) based flame retardants (Br or Sb do not exceed 0.1% by weight in homogeneous material)

(3) MSL, Peak Temp. -- The Moisture Sensitivity Level rating according to the JEDEC industry standard classifications, and peak solder temperature.

(4) There may be additional marking, which relates to the logo, the lot trace code information, or the environmental category on the device.

(5) Multiple Device Markings will be inside parentheses. Only one Device Marking contained in parentheses and separated by a "~" will appear on a device. If a line is indented then it is a continuation of the previous line and the two combined represent the entire Device Marking for that device.

Important Information and Disclaimer: The information provided on this page represents TI's knowledge and belief as of the date that it is provided. TI bases its knowledge and belief on information provided by third parties, and makes no representation or warranty as to the accuracy of such information. Efforts are underway to better integrate information from third parties. TI has taken and continues to take reasonable steps to provide representative and accurate information but may not have conducted destructive testing or chemical analysis on incoming materials and chemicals. TI and TI suppliers consider certain information to be proprietary, and thus CAS numbers and other limited information may not be available for release.

In no event shall TI's liability arising out of such information exceed the total purchase price of the TI part(s) at issue in this document sold by TI to Customer on an annual basis.

TAPE AND REEL INFORMATION

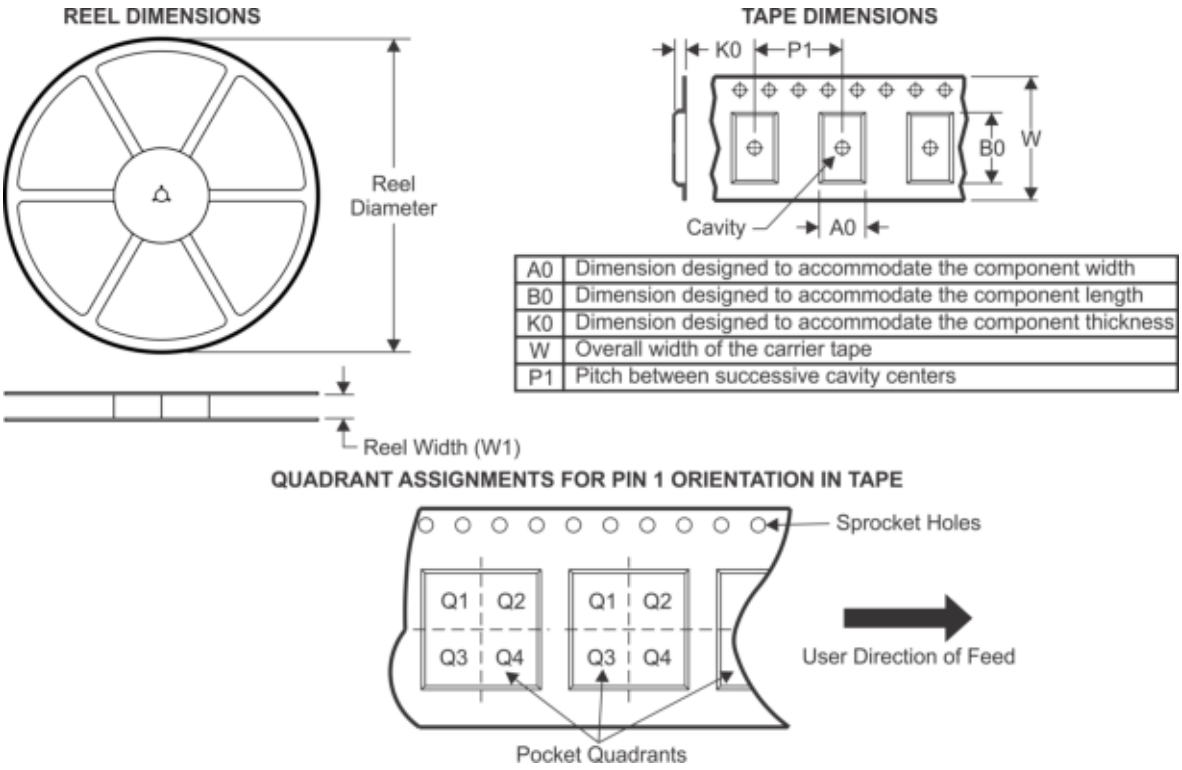

A0	Dimension designed to accommodate the component width
B0	Dimension designed to accommodate the component length
K0	Dimension designed to accommodate the component thickness
W	Overall width of the carrier tape
P1	Pitch between successive cavity centers

*All dimensions are nominal

Device	Package Type	Package Drawing	Pins	SPQ	Reel Diameter (mm)	Reel Width W1 (mm)	A0 (mm)	B0 (mm)	K0 (mm)	P1 (mm)	W (mm)	Pin1 Quadrant
LMC6044AIMX	SOIC	D	14	2500	330.0	16.4	6.5	9.35	2.3	8.0	16.0	Q1
LMC6044AIMX/NOPB	SOIC	D	14	2500	330.0	16.4	6.5	9.35	2.3	8.0	16.0	Q1
LMC6044IMX/NOPB	SOIC	D	14	2500	330.0	16.4	6.5	9.35	2.3	8.0	16.0	Q1

TAPE AND REEL BOX DIMENSIONS

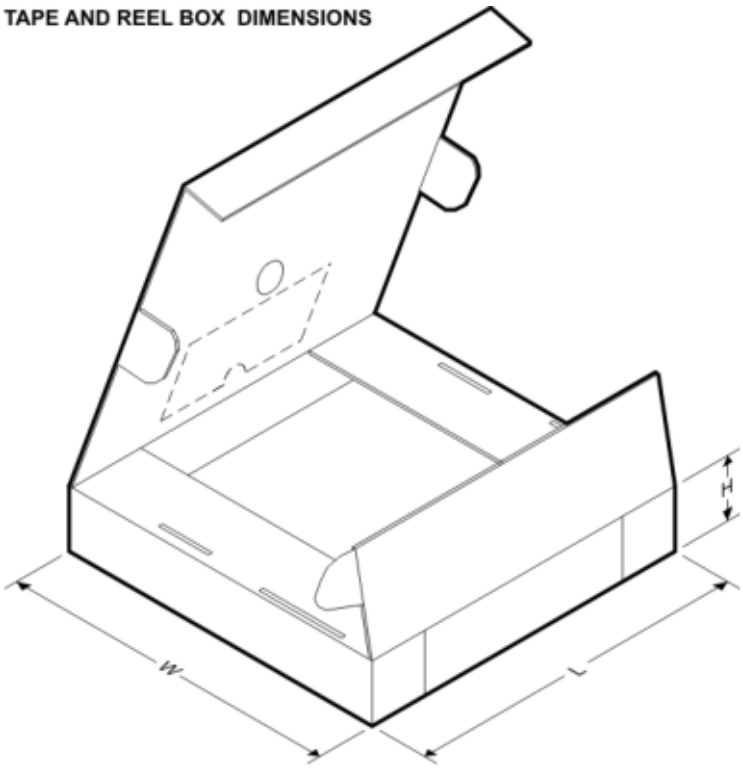

*All dimensions are nominal

Device	Package Type	Package Drawing	Pins	SPQ	Length (mm)	Width (mm)	Height (mm)
LMC6044AIMX	SOIC	D	14	2500	367.0	367.0	35.0
LMC6044AIMX/NOPB	SOIC	D	14	2500	367.0	367.0	35.0
LMC6044IMX/NOPB	SOIC	D	14	2500	367.0	367.0	35.0

NFF0014A

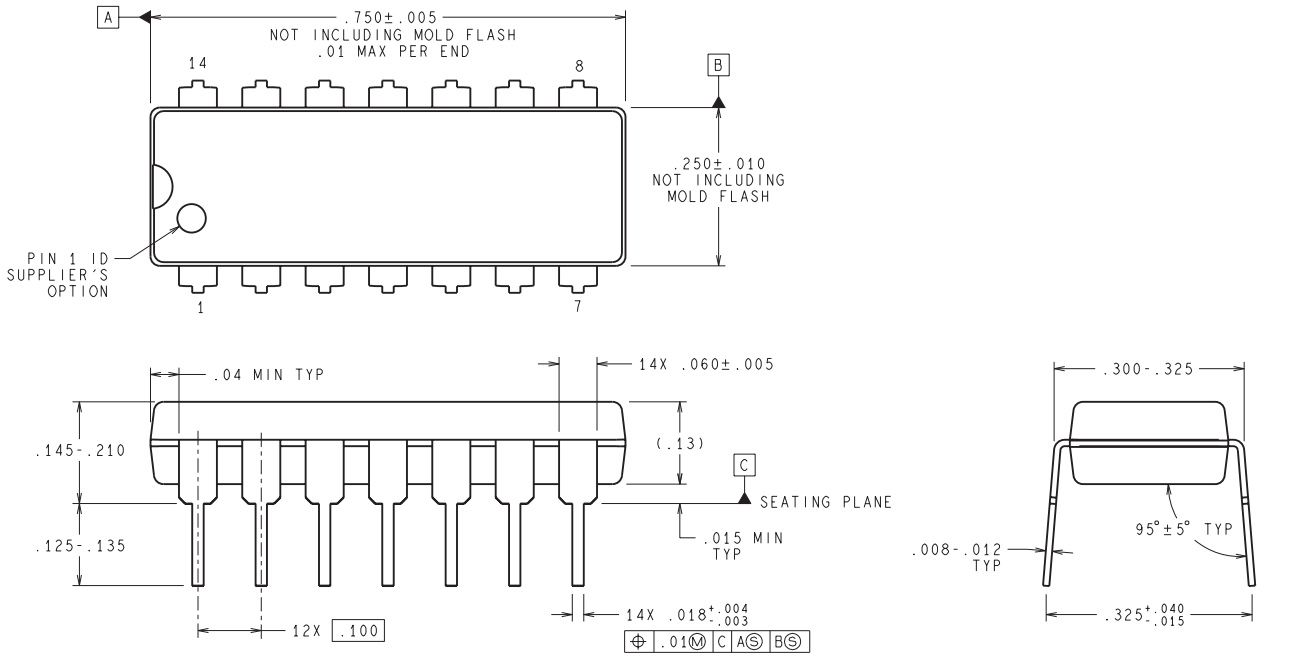

DIMENSIONS ARE IN INCHES
DIMENSIONS IN ( ) FOR REFERENCE ONLY

N14A (Rev G)

D (R–PDSO–G14) PLASTIC SMALL OUTLINE

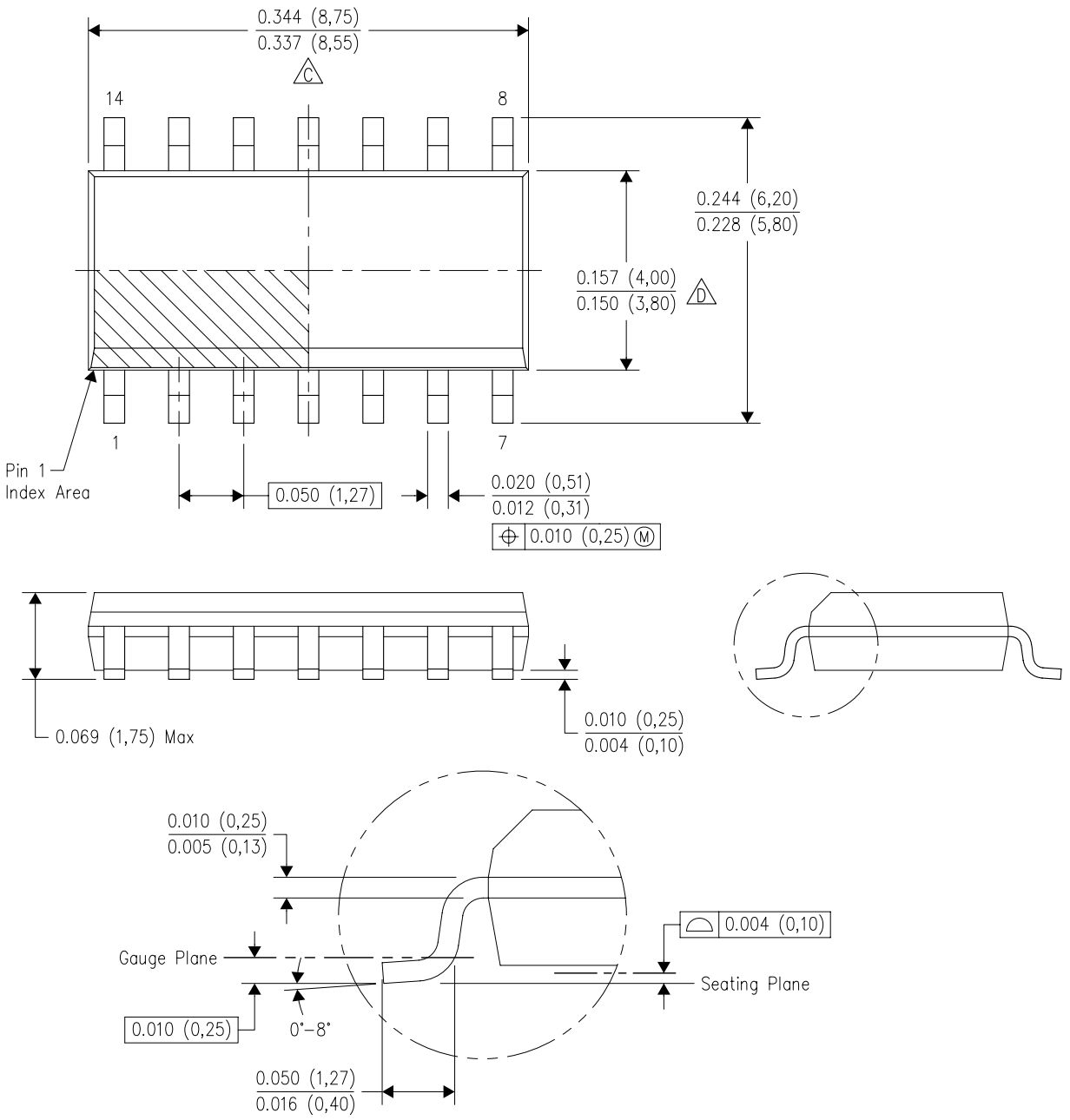

NOTES:
A. All linear dimensions are in inches (millimeters).
B. This drawing is subject to change without notice.
C. Body length does not include mold flash, protrusions, or gate burrs. Mold flash, protrusions, or gate burrs shall not exceed 0.006 (0,15) each side.
D. Body width does not include interlead flash. Interlead flash shall not exceed 0.017 (0,43) each side.
E. Reference JEDEC MS–012 variation AB.

IMPORTANT NOTICE

Texas Instruments Incorporated and its subsidiaries (TI) reserve the right to make corrections, enhancements, improvements and other changes to its semiconductor products and services per JESD46, latest issue, and to discontinue any product or service per JESD48, latest issue. Buyers should obtain the latest relevant information before placing orders and should verify that such information is current and complete. All semiconductor products (also referred to herein as “components”) are sold subject to TI’s terms and conditions of sale supplied at the time of order acknowledgment.

TI warrants performance of its components to the specifications applicable at the time of sale, in accordance with the warranty in TI’s terms and conditions of sale of semiconductor products. Testing and other quality control techniques are used to the extent TI deems necessary to support this warranty. Except where mandated by applicable law, testing of all parameters of each component is not necessarily performed.

TI assumes no liability for applications assistance or the design of Buyers’ products. Buyers are responsible for their products and applications using TI components. To minimize the risks associated with Buyers’ products and applications, Buyers should provide adequate design and operating safeguards.

TI does not warrant or represent that any license, either express or implied, is granted under any patent right, copyright, mask work right, or other intellectual property right relating to any combination, machine, or process in which TI components or services are used. Information published by TI regarding third-party products or services does not constitute a license to use such products or services or a warranty or endorsement thereof. Use of such information may require a license from a third party under the patents or other intellectual property of the third party, or a license from TI under the patents or other intellectual property of TI.

Reproduction of significant portions of TI information in TI data books or data sheets is permissible only if reproduction is without alteration and is accompanied by all associated warranties, conditions, limitations, and notices. TI is not responsible or liable for such altered documentation. Information of third parties may be subject to additional restrictions.

Resale of TI components or services with statements different from or beyond the parameters stated by TI for that component or service voids all express and any implied warranties for the associated TI component or service and is an unfair and deceptive business practice. TI is not responsible or liable for any such statements.

Buyer acknowledges and agrees that it is solely responsible for compliance with all legal, regulatory and safety-related requirements concerning its products, and any use of TI components in its applications, notwithstanding any applications-related information or support that may be provided by TI. Buyer represents and agrees that it has all the necessary expertise to create and implement safeguards which anticipate dangerous consequences of failures, monitor failures and their consequences, lessen the likelihood of failures that might cause harm and take appropriate remedial actions. Buyer will fully indemnify TI and its representatives against any damages arising out of the use of any TI components in safety-critical applications.

In some cases, TI components may be promoted specifically to facilitate safety-related applications. With such components, TI’s goal is to help enable customers to design and create their own end-product solutions that meet applicable functional safety standards and requirements. Nonetheless, such components are subject to these terms.

No TI components are authorized for use in FDA Class III (or similar life-critical medical equipment) unless authorized officers of the parties have executed a special agreement specifically governing such use.

Only those TI components which TI has specifically designated as military grade or “enhanced plastic” are designed and intended for use in military/aerospace applications or environments. Buyer acknowledges and agrees that any military or aerospace use of TI components which have ***not*** been so designated is solely at the Buyer's risk, and that Buyer is solely responsible for compliance with all legal and regulatory requirements in connection with such use.

TI has specifically designated certain components as meeting ISO/TS16949 requirements, mainly for automotive use. In any case of use of non-designated products, TI will not be responsible for any failure to meet ISO/TS16949.

Products		**Applications**	
Audio	www.ti.com/audio	Automotive and Transportation	www.ti.com/automotive
Amplifiers	amplifier.ti.com	Communications and Telecom	www.ti.com/communications
Data Converters	dataconverter.ti.com	Computers and Peripherals	www.ti.com/computers
DLP® Products	www.dlp.com	Consumer Electronics	www.ti.com/consumer-apps
DSP	dsp.ti.com	Energy and Lighting	www.ti.com/energy
Clocks and Timers	www.ti.com/clocks	Industrial	www.ti.com/industrial
Interface	interface.ti.com	Medical	www.ti.com/medical
Logic	logic.ti.com	Security	www.ti.com/security
Power Mgmt	power.ti.com	Space, Avionics and Defense	www.ti.com/space-avionics-defense
Microcontrollers	microcontroller.ti.com	Video and Imaging	www.ti.com/video
RFID	www.ti-rfid.com		
OMAP Applications Processors	www.ti.com/omap	**TI E2E Community**	e2e.ti.com
Wireless Connectivity	www.ti.com/wirelessconnectivity		

Mailing Address: Texas Instruments, Post Office Box 655303, Dallas, Texas 75265
Copyright © 2013, Texas Instruments Incorporated