PRODUCT SPECIFICATIONS

SHARP

AVC Liquid Crystal Displays Group

# LQ104S1DG21

## TFT-LCD Module

Spec. Issue Date: September 27, 2005

No: LD-14304D

| PREPARED BY : DATE | SHARP | SPEC No. LD-14304D |
|---|---|---|
| | | FILE No. |
| APPROVED BY : DATE | | ISSUE : Apr. 10. 2002 |
| | MOBILE LIQUID CRYSTAL DISPLAY GROUP | PAGE : 15 pages |
| | SHARP CORPORATION | APPLICABLE GROUP |
| | SPECIFICATION | MOBILE LIQUID CRYSTAL DISPLAY GROUP |

REVISION : Sep. 27. 2005

DEVICE SPECIFICATION FOR

# TFT-LCD Module

MODEL No.

# LQ104S1DG21

**These parts have corresponded with the RoHS directive.**

☐ CUSTOMER'S APPROVAL

DATE

BY

PRESENTED BY

T. NAKA
Division deputy general manager of
Mobile LCD design center II
ENGINEERING DEPARTMENT V
MOBILE LCD DESIGN CENTER II
MOBILE LIQUID CRYSTAL DISPLAY GROUP
SHARP CORPORATION

# RECORDS OF REVISION

LQ104S1DG21

| SPEC No. | DATE | PAGE | SUMMARY | NOTE |
|---|---|---|---|---|
| LD-14304 | Apr. 10.2002 | - | | 1st Issue |
| LD-14304A | Apr. 22.2003 | 1 | 1.Application<br>Added the sentence, " (This specification is only～)" | 2nd Issue |
| | | 3 | 4-1. TFT-LCD panel driving<br>Deleted Used connector:DF9MA-41P-1V(Hirose Electric Co., Ltd.) | |
| | | 5 | 6-1. TFT-LCD panel driving<br>Current dissipation<br>Vcc=3.3V Icc typ 310 → 240 mA<br>max 450 → 370 mA<br>Vcc=5.0V Icc typ 330 → 180 mA<br>max 470 → 330 mA<br>Input voltage (Low) :Max 0.9→0.3Vcc V<br>Input voltage (High) :Min 2.1→0.7Vcc V<br>Input current (low) $I_{OL2}$ : Max 60→10 μA<br>$I_{OL3}$ : Added Max 800 μA<br>Input current (High) $I_{OL2}$ : Max 60→300 μA<br>$I_{OL3}$ : Added Max 800 μA | |
| | | 5 | 【Note1】 Changed "Vcc-turm-on conditions"<br>0＜T3≦1s → 0＜T3≦100ms<br>1s＜T4 → 0＜T4≦1s<br>→ T5＞200ms<br>Vcc-dip conditions<br>1） 2.7V≦Vcc＜3.0V → 2.5V≦Vcc<br>2） Vcc＜2.7V → Vcc＜2.5V<br>Remark changed :<br>【Note4】 【Note5】 【Note6】<br>【Note7】 【Note8】 【Note9】 | |
| | | 6 | Remark changed :<br>【Note2】 At the condition of $I_L$=6.0mArms | |
| | | 7 | 7-1. Timing characteristics<br>Hsync-Vsync phase difference (TVh)<br>Corrected unit :ns → clock | |
| | | 12 | 11. Handling Precautions<br>Changed "Handling precautions"<br>Changed : h) Protection film is attached ～<br>Changed : j) Do not expose the LCD ～<br>Changed : m) When handling LCD modules～<br>Added : o) Be sure not to apply | |
| | | 13 | 1)Lot No.Label :<br>① Changed the figure of module label<br>According with the change of driver IC,the letter "A" at the end of the lot number was added.<br>②Added the figure of packing box label<br>Deleted : 5)Do not use～ | |

# RECORDS OF REVISION

LQ104S1DG21

| SPEC No. | DATE | PAGE | SUMMARY | NOTE |
|---|---|---|---|---|
| LD-14304B | 2004.1.9 | 6 | Added： Note) Insulate the high… | 3rd Issue |
| | | 12 | 12.Packing form<br>Product Country Added：TAIWAN | |
| | | 13 | 14. Others<br>1)Label:<br>Added the figure of module label (Taiwan product)<br>Added the figure of packing box label(Taiwan product) | |
| LD-14304C | 2004. 6. 17 | 6 | 6-2. Backlight driving<br>Added：(It is usually required to measure…<br>Change：Lamp frequency (Min) 40kHz ⇒ 35kHz | 4th Issue |
| | | 10 | 9. Optical Characteristics<br>Response Time：Rise: 20ms→10ms, Decay: 40ms→25ms | |
| | | 13 | 14. Reliability test items<br>Add: ESD test<br>Add: EMI | |
| LD-14304D | Sep. 27. 2005 | - | Add: RoHS Compliance<br>※It is applied from the delivery in April, 2005. | |
| | | 6 | 6-2. Backlight driving<br>Add: It is usually required to measure under the…<br>【Note5】Above value is applicable when lamp…<br>【Note5】(Lamp lifetime may vary if lamp is…<br>【Note6】Be sure to use a back light power supply…<br>【Note6】Be sure to use the detect circuit…<br>【Note6】Recommended inverter is… | |
| | | 10 | 9. Optical Characteristics<br>Change: Fig3. Photodetector BM-5A → BM-5A & SR-3<br>Field = 2° → 1° | |
| | | 14 | 14 Packing box Label:<br>Add: RoHS Compliance<br>※It is applied from the delivery in April, 2005. | |
| | | | | |
| | | | | |
| | | | | |
| | | | | |
| | | | | |
| | | | | |
| | | | | |
| | | | | |
| | | | | |

1. Application

This specifications applies to color TFT-LCD module, LQ104S1DG21.

(This specification is only applied for the module which has letter "A" at the end of the lot number of the module.)

These specifications sheets are the proprietary product of SHARP CORPORATION(”SHARP) and include materials protected under copyright of SHARP. Do not reproduce or cause any third party to reproduce them in any form or by any means, electronic or mechanical, for any purpose, in whole or in part, without the express written permission of SHARP .

The device listed in these specifications sheets was designed and manufactured for use in general electronic equipment.

In case of using the device for applications such as control and safety equipment for transportation(aircraft, trains, automobiles, etc. ), rescue and security equipment and various safety related equipment which require higher reliability and safety, take into consideration that appropriate measures such as fail-safe functions and redundant system design should be taken .

Do not use the device for equipment that requires an extreme level of reliability, such as aerospace applications, telecommunication equipment(trunk lines), nuclear power control equipment and medical or other equipment for life support .

SHARP assumes no responsibility for any damage resulting from the use of the device which does not comply with the instructions and the precautions specified in these specifications sheets .

Contact and consult with a SHARP sales representative for any questions about this device .

2. Overview

This module is a color active matrix LCD module incorporating amorphous silicon TFT (Thin Film Transistor). It is composed of a color TFT-LCD panel, driver ICs, control circuit and power supply circuit and a backlight unit. Graphics and texts can be displayed on a 800×3×600 dots panel with 262,144 colors by supplying 18 bit data signal (6bit/color), four timing signals, +3.3V or +5V DC supply voltage for TFT-LCD panel driving and supply voltage for backlight.

The TFT-LCD panel used for this module is a low-reflection and higher-color-saturation type. Therefore, this module is also suitable for the multimedia use.

Optimum viewing direction is 6 o'clock.

Backlight-driving DC/AC inverter is not built in this module.

3. Mechanical Specifications

| Parameter | Specifications | Unit |
|---|---|---|
| Display size | 26 (10.4") Diagonal | cm |
| Active area | 211.2(H)×158.4(V) | mm |
| Pixel format | 800(H)×600(V) | pixel |
| | (1 pixel＝R＋G＋B dots) | |
| Pixel pitch | 0.264(H)×0.264(V) | mm |
| Pixel configuration | R,G,B vertical stripe | |
| Display mode | Normally white | |
| Unit outline dimensions *1 | 246.5(W)×179.4(H)×15.5max(D) | mm |
| Mass | 620 max | g |
| Surface treatment | Anti-glare and hard-coating 3H | |

*1 : excluding backlight cables.

Outline dimensions is shown in Fig.1

4. Input Terminals

4-1. TFT-LCD panel driving

Corresponding connector: DF9-41S-1V (Hirose Electric Co., Ltd.)
DF9A-41S-1V (Hirose Electric Co., Ltd.)
DF9B-41S-1V (Hirose Electric Co., Ltd.)
DF9M-41S-1V (Hirose Electric Co., Ltd.)

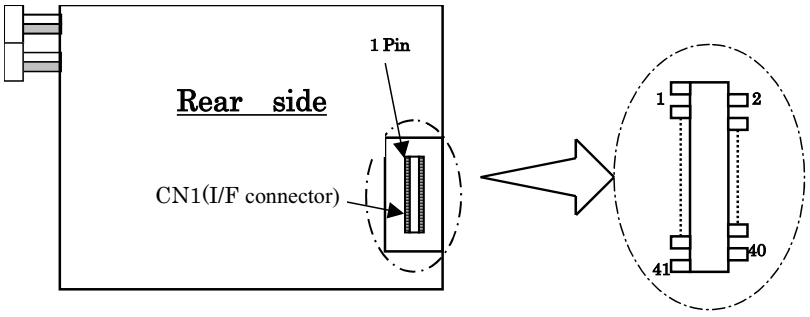

| Pin No. | Symbol | Function | Remark |
|---|---|---|---|
| 1 | GND | — | — |
| 2 | CK | Clock signal for sampling each data signal | — |
| 3 | GND | — | — |
| 4 | Hsync | Horizontal synchronous signal | 【Note1】 |
| 5 | Vsync | Vertical synchronous signal | 【Note1】 |
| 6 | GND | — | — |
| 7 | GND | — | — |
| 8 | GND | — | — |
| 9 | R0 | ＲＥＤ data signal(LSB) | — |
| 10 | R1 | ＲＥＤ data signal | — |
| 11 | R2 | ＲＥＤ data signal | — |
| 12 | GND | — | — |
| 13 | R3 | ＲＥＤ data signal | — |
| 14 | R4 | ＲＥＤ data signal | — |
| 15 | R5 | ＲＥＤ data signal(MSB) | — |
| 16 | GND | — | — |
| 17 | GND | — | — |
| 18 | GND | — | — |
| 19 | G0 | ＧＲＥＥＮ data signal(LSB) | — |
| 20 | G1 | ＧＲＥＥＮ data signal | — |
| 21 | G2 | ＧＲＥＥＮ data signal | — |
| 22 | GND | — | — |
| 23 | G3 | ＧＲＥＥＮ data signal | — |
| 24 | G4 | ＧＲＥＥＮ data signal | — |
| 25 | G5 | ＧＲＥＥＮ data signal(MSB) | — |
| 26 | GND | — | — |
| 27 | GND | — | — |
| 28 | GND | — | — |
| 29 | B0 | ＢＬＵＥ data signal(LSB) | — |
| 30 | B1 | ＢＬＵＥ data signal | — |
| 31 | B2 | ＢＬＵＥ data signal | — |
| 32 | GND | — | — |
| 33 | B3 | ＢＬＵＥ data signal | — |
| 34 | B4 | ＢＬＵＥ data signal | — |
| 35 | B5 | ＢＬＵＥ data signal(MSB) | — |
| 36 | GND | — | — |
| 37 | ENAB | Signal to settle the horizontal display position | 【Note2】 |
| 38 | R/L | Horizontal display mode select signal | — |
| 39 | Vcc | power supply (+3.3Vor+5.0V) | — |
| 40 | Vcc | power supply (+3.3Vor+5.0V) | — |
| 41 | U/D | Vertical display mode select signal | — |

※The shielding case is connected with GND.

【Note1】The polarity of both synchronous signals are negative.

【Note2】The horizontal display start timing is settled in accordance with a rising timing of ENAB signal. In case ENAB is fixed "Low", the horizontal start timing is determined as described in 7-2. Don't keep ENAB " High" during operation.

【Note3】R/L=High、U/D=Low　　R/L=Low、U/D=Low

Please do not use this terminal by “open”.

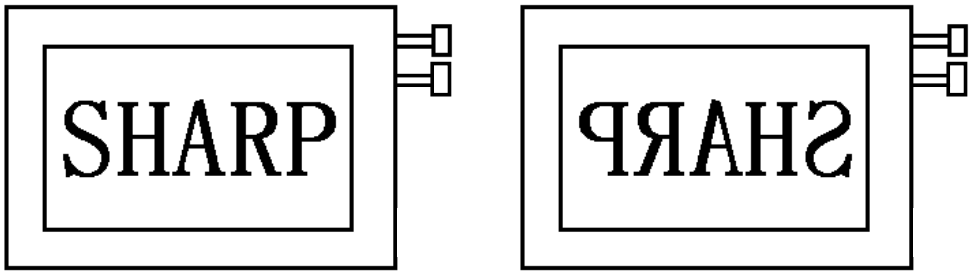


【Note4】R/L=High、U/D=High　　R/L=Low、U/D=High

Please do not use this terminal by “open”.

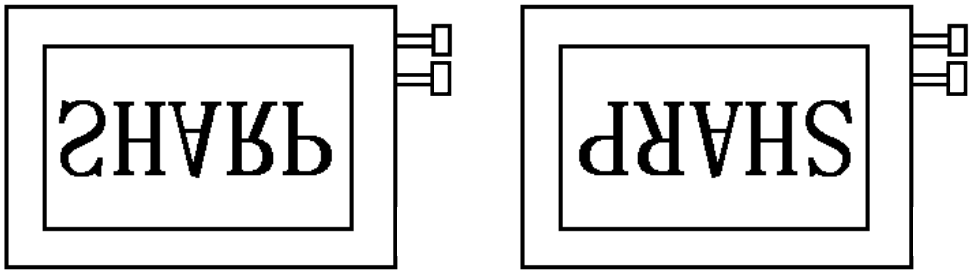


4-2. Backlight driving

Connector name :CN2、CN3　　Used connector : BHR-03VS-1(JST)

Corresponding connector :SM02(8.0)B-BHS(JST)

| Pin no. | Symbol | Function | Cable color |
|---|---|---|---|
| 1 | $V_{HIGH}$ | Power supply for lamp (High voltage side) | Pink |
| 2 | NC | This is electrically opened. | |
| 3 | $V_{LOW}$ | Power supply for lamp (Low voltage side) | White |

5. Absolute Maximum Ratings

| Parameter | Symbol | Condition | Ratings | Unit | Remark |
|---|---|---|---|---|---|
| Input voltage | $V_I$ | Ta=25℃ | －0.3 ～ Vcc+0.3 | V | 【Note1】 |
| +5V supply voltage | Vcc | Ta=25℃ | 0 ～ ＋ 6 | V | |
| Storage temperature | Tstg | － | -30～70 | ℃ | 【Note2】 |
| Operating temperature (Ambient) | Topa | － | -10～65 | ℃ | 【Note3】 |

【Note1】CK,R0～R5,G0～G5,B0～B5,Hsync,Vsync,ENAB, R/L, U/L

【Note2】Humidity：95%RH Max. at Ta≦50℃.

Maximum wet-bulb temperature at 39℃ or less at Ta>50℃.（ No condensation.）

【Note3】Humidity：95%RH Max. at Ta≦40℃.

Maximum wet-bulb temperature at 39℃ or less at Ta>40℃.（ No condensation.）

6. Electrical Characteristics

6-1.TFT-LCDpaneldriving

Ta＝25℃

| Parameter | | Symbol | Min. | Typ. | Max. | Unit | Remark |
|---|---|---|---|---|---|---|---|
| Power Supply | Supply voltage | Vcc | +3.0 | +3.3 \| +5.0 | +5.5 | V | 【Note1】 |
| | Current dissipation | Icc | — | 240 | 370 | mA | Vcc=3.3V【Note2】 |
| | | Icc | — | 180 | 330 | mA | Vcc=5.0V【Note2】 |
| Permissive input ripple voltage | | $V_{RF}$ | — | — | 100 | mVp-p | Vcc=5.0V |
| Input voltage (Low) | | $V_{IL}$ | — | — | 0.3Vcc | V | 【Note3】 |
| Input voltage (High) | | $V_{IH}$ | 0.7Vcc | — | — | V | |
| Input current (low) | | $I_{OL1}$ | — | — | 1.0 | μA | $V_I$=0V 【Note4】 |
| | | $I_{OL2}$ | — | — | 10 | μA | $V_I$=0V 【Note5】 |
| | | $I_{OL3}$ | — | — | 800 | μA | $V_I$=0V 【Note6】 |
| Input current (High) | | $I_{OH1}$ | — | — | 1.0 | μA | $V_I$=Vcc 【Note7】 |
| | | $I_{OH2}$ | — | — | 300 | μA | $V_I$=Vcc 【Note8】 |
| | | $I_{OH3}$ | — | — | 800 | μA | $V_I$=Vcc 【Note9】 |

【 NOTE 1】

Vcc-turn-on conditions

T１≦１５ｍｓ
０＜Ｔ２≦１０ｍｓ
０＜Ｔ３≦１００ｍｓ
０＜Ｔ４≦１ｓ
Ｔ５＞２００ｍｓ

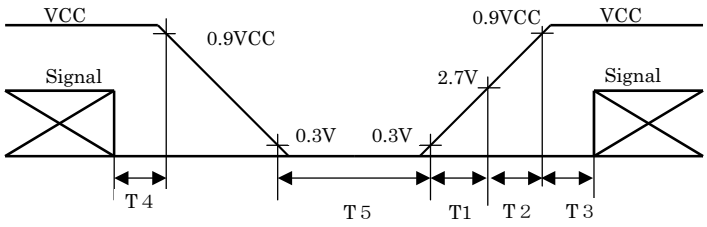


Vcc-dip conditions

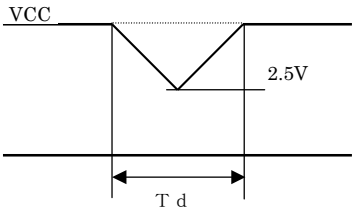


1） ２．５V≦Ｖｃｃ
ｔｄ≦１０ｍｓ
2） Ｖｃｃ＜２．５Ｖ
Vcc-dip condition should also follow
The Vcc-turn-on conditions

【Note2】 Typical current situation : 16-gray-bar pattern. Vcc=+3.3V/+5.0V

【Note3】 CK,R0~R5,G0~G5,B0~B5,Hsync,Vsync,ENAB,R/L,U/D

【Note4】 CK,R0~R5,G0~G5,B0~B5,Hsync,Vsync

【Note5】 U/D,ENAB

【Note6】 R/L

【Note7】 CK,R0~R5,G0~G5,B0~B5,Hsnc,Vsync,R/L

【Note8】 ENAB

【Note9】 U/D

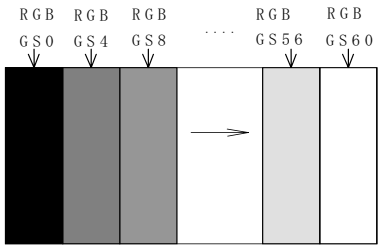

6-2. Backlight driving

The backlight system is an edge-lighting type with twin CCFT (Cold Cathode Fluorescent Tube).

The characteristics of single lamp are shown in the following table.

(It is usually required to measure under the following condition.

condition : $I_L$ =6.0mA,Ta=25℃±2℃, $F_L$ =60kHz.) Ta=25℃

| Parameter | Symbol | Min. | Typ. | Max. | Unit | Remark | |
|---|---|---|---|---|---|---|---|
| Lamp current | $I_L$ | 3.5 | 6.0 | 7.0 | mArms | 【Note1】 | |
| Lamp power consumption | $P_L$ | — | 2.8 | — | W | 【Note2】 | |
| Lamp frequency | $F_L$ | 35 | 60 | 70 | kHz | 【Note3】 | |
| Kick-off voltage | Vs | — | — | 1000 | Vrms | Ta=25℃ | 【Note4】 |
| | | — | — | 1300 | Vrms | Ta =0℃ | |
| | | — | — | 1450 | Vrms | Ta =-10℃ | |
| Lamp life time | $L_L$ | 50000 | — | — | hour | 【Note5】 $I_L$=6.0mA | |
| | $L_L$ | 30000 | — | — | hour | 【Note5】 $I_L$=7.0mA | |

【Note1】 Lamp current is measured with current meter for high frequency as shown below.

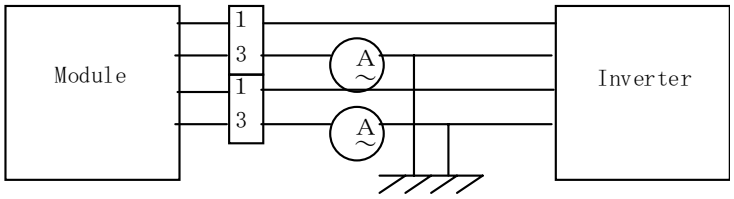


＊ 3pin is $V_{LOW}$

【Note2】 At the condition of $Y_L$ =350cd/$m^2$

【Note3】 Lamp frequency may produce interference with horizontal synchronous frequency, and this may cause beat on the display. Therefore lamp frequency shall be detached as much as possible from the horizontal synchronous frequency and from the harmonics of horizontal synchronous to avoid interference.

【Note4】 The open output voltage of the inverter shall be maintained for more than 1sec; otherwise the lamp may not be turned on.

【Note5】 Since lamp is consumables, the life time written above is referential value and it is not guaranteed in this specification sheet by SHARP.

Above value is applicable when lamp (the long side of LCD module) is placed horizontally. (Landscape position)

Lamp life time is defined that it applied either ① or ② under this condition.

(Continuous turning on at Ta=25℃, IL=6 or 7mArms)

① Brightness becomes 50% of the original value under standard condition.

② Kick-off voltage at Ta= -10℃ exceeds maximum value, 1450 Vrms.

(Lamp lifetime may vary if lamp is in portrait position due to the change of mercury density inside the lamp.)

In case of operating under lower temp environment, the lamp exhaustion is accelerated and the brightness becomes lower.

(Continuous operating under for around 1 month under lower temp condition may reduce the brightness to half of the original brightness.)

In case of such usage under lower temp environment, periodical lamp exchange is recommended.

【Note6】 The performance of the backlight, for example life time or brightness, is much influenced by the characteristics of the DC-AC inverter for the lamp. When you design or order the inverter, please make sure that a poor lighting caused by the mismatch of the backlight and the inverter (miss-lighting, flicker, etc.) never occur. when you confirm it, the module should be operated in the same condition as it is installed in your instrument.

Be sure to use a back light power supply with the safety protection circuit such as the detection circuit for the excess voltage, excess current and or electric discharge waveform.

Be sure to use the detect circuit by which one side of the CCFT lamps can be controlled independently. Otherwise, when one side of the CCFT is open, the excess current may possibly be applied to the other side of the lamp.

Recommended inverter is “CXA-P1212B-WJL(TDK corporation)”.

【Note7】 It is required to have the inverter designed so that to allow the impedance deviation of the two CCFT lamps and the capacity deviation of barast capacitor.

7. Timing Characteristics of input signals

Timing diagrams of input signal are shown in Fig.2.

7-1. Timing characteristics

| Parameter | | Symbol | Min. | Typ. | Max. | Unit | Remark |
|---|---|---|---|---|---|---|---|
| Clock | Frequency | 1/Tc | — | 40.0 | 42.0 | MHz | — |
| | High time | Tch | 6 | — | — | ns | — |
| | Low time | Tcl | 6 | — | — | ns | — |
| | Duty ratio | Th/T | 40 | 50 | 60 | % | — |
| Data | Setup time | Tds | 3 | — | — | ns | — |
| | Hold time | Tdh | 5 | — | — | ns | — |
| Horizontal sync. signal | Cycle | TH | 20.8 | 26.4 | — | μs | — |
| | | | 832 | 1056 | — | clock | — |
| | Pulse width | THp | 2 | 128 | 200 | clock | — |
| Vertical sync. signal | Cycle | TV | 628 | 666 | 798 | line | — |
| | Pulse width | TVp | 2 | 4 | 6 | line | — |
| Horizontal display period | | THd | 800 | 800 | 800 | clock | — |
| Hsync-Clock phase difference | | THc | 5 | — | Tc-10 | ns | — |
| Hsync-Vsync phase difference | | TVh | 0 | — | TH-THp | clock | — |
| Vertical data start position | | TVs | 23 | 23 | 23 | line | — |

Note) In case of lower frequency, the deterioration of display quality, flicker etc.,may be occurred.

7-2. Horizontal display position

The horizontal display position is determined by ENAB signal and the input data corresponding to the rising edge of ENAB signal is displayed at the left end of the active area.

| Parameter | | symbol | Min. | Typ. | Max. | Unit | Remark |
|---|---|---|---|---|---|---|---|
| Enable signal | Setup time | Tes | 5 | — | Tc-10 | ns | — |
| | Pulse width | Tep | 2 | 800 | TH-10 | clock | — |
| Hsync-Enable signal phase difference | | THe | 58 | 88 | 170 | clock | — |

Note) When ENAB is fixed "Low", the display starts from the data of C88(clock) as shown in Fig.2.

7-3. Vertical display position

The vertical display position, TVs is fixed “23” (line).

7-4. Input Data Signals and Display Position on the screen

Display position of input data

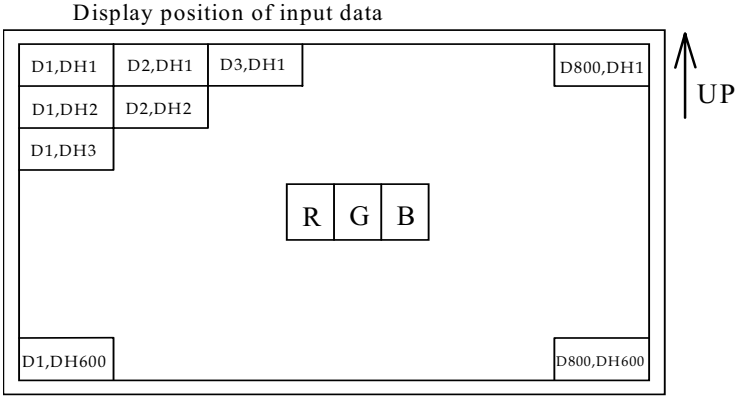

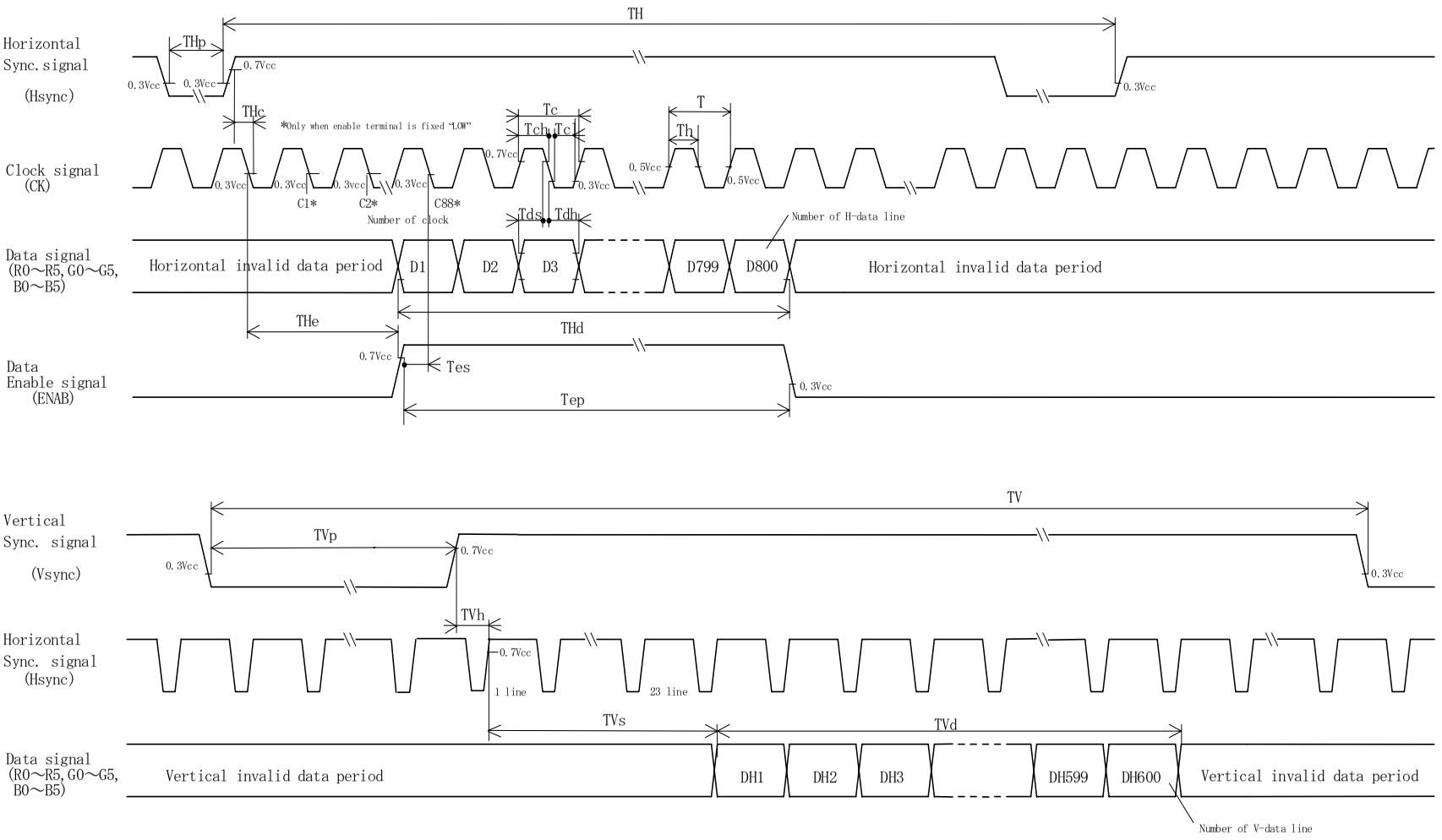


Fig. 2 Input signal waveforms

LD14304D-8

8. Input Signals, Basic Display Colors and Gray Scale of Each Color

| | Colors & Gray scale | Data signal | | | | | | | | | | | | | | | | | |
|---|---|---|---|---|---|---|---|---|---|---|---|---|---|---|---|---|---|---|---|
| | | Gray Scale | R0 | R1 | R2 | R3 | R4 | R5 | G0 | G1 | G2 | G3 | G4 | G5 | B0 | B1 | B2 | B3 | B4 | B5 |
| Basic Color | Black | — | 0 | 0 | 0 | 0 | 0 | 0 | 0 | 0 | 0 | 0 | 0 | 0 | 0 | 0 | 0 | 0 | 0 | 0 |
| | Blue | — | 0 | 0 | 0 | 0 | 0 | 0 | 0 | 0 | 0 | 0 | 0 | 0 | 1 | 1 | 1 | 1 | 1 | 1 |
| | Green | — | 0 | 0 | 0 | 0 | 0 | 0 | 1 | 1 | 1 | 1 | 1 | 1 | 0 | 0 | 0 | 0 | 0 | 0 |
| | Cyan | — | 0 | 0 | 0 | 0 | 0 | 0 | 1 | 1 | 1 | 1 | 1 | 1 | 1 | 1 | 1 | 1 | 1 | 1 |
| | Red | — | 1 | 1 | 1 | 1 | 1 | 1 | 0 | 0 | 0 | 0 | 0 | 0 | 0 | 0 | 0 | 0 | 0 | 0 |
| | Magenta | — | 1 | 1 | 1 | 1 | 1 | 1 | 0 | 0 | 0 | 0 | 0 | 0 | 1 | 1 | 1 | 1 | 1 | 1 |
| | Yellow | — | 1 | 1 | 1 | 1 | 1 | 1 | 1 | 1 | 1 | 1 | 1 | 1 | 0 | 0 | 0 | 0 | 0 | 0 |
| | White | — | 1 | 1 | 1 | 1 | 1 | 1 | 1 | 1 | 1 | 1 | 1 | 1 | 1 | 1 | 1 | 1 | 1 | 1 |
| Gray Scale of Red | Black | GS0 | 0 | 0 | 0 | 0 | 0 | 0 | 0 | 0 | 0 | 0 | 0 | 0 | 0 | 0 | 0 | 0 | 0 | 0 |
| | ⇧ | GS1 | 1 | 0 | 0 | 0 | 0 | 0 | 0 | 0 | 0 | 0 | 0 | 0 | 0 | 0 | 0 | 0 | 0 | 0 |
| | Darker | GS2 | 0 | 1 | 0 | 0 | 0 | 0 | 0 | 0 | 0 | 0 | 0 | 0 | 0 | 0 | 0 | 0 | 0 | 0 |
| | ⇧ | ↓ | | | | ↓ | | | | | | ↓ | | | | | | ↓ | | |
| | ⇩ | ↓ | | | | ↓ | | | | | | ↓ | | | | | | ↓ | | |
| | Brighter | GS61 | 1 | 0 | 1 | 1 | 1 | 1 | 0 | 0 | 0 | 0 | 0 | 0 | 0 | 0 | 0 | 0 | 0 | 0 |
| | ⇩ | GS62 | 0 | 1 | 1 | 1 | 1 | 1 | 0 | 0 | 0 | 0 | 0 | 0 | 0 | 0 | 0 | 0 | 0 | 0 |
| | Red | GS63 | 1 | 1 | 1 | 1 | 1 | 1 | 0 | 0 | 0 | 0 | 0 | 0 | 0 | 0 | 0 | 0 | 0 | 0 |
| Gray Scale of Green | Black | GS0 | 0 | 0 | 0 | 0 | 0 | 0 | 0 | 0 | 0 | 0 | 0 | 0 | 0 | 0 | 0 | 0 | 0 | 0 |
| | ⇧ | GS1 | 0 | 0 | 0 | 0 | 0 | 0 | 1 | 0 | 0 | 0 | 0 | 0 | 0 | 0 | 0 | 0 | 0 | 0 |
| | Darker | GS2 | 0 | 0 | 0 | 0 | 0 | 0 | 0 | 1 | 0 | 0 | 0 | 0 | 0 | 0 | 0 | 0 | 0 | 0 |
| | ⇧ | ↓ | | | | ↓ | | | | | | ↓ | | | | | | ↓ | | |
| | ⇩ | ↓ | | | | ↓ | | | | | | ↓ | | | | | | ↓ | | |
| | Brighter | GS61 | 0 | 0 | 0 | 0 | 0 | 0 | 1 | 0 | 1 | 1 | 1 | 1 | 0 | 0 | 0 | 0 | 0 | 0 |
| | ⇩ | GS62 | 0 | 0 | 0 | 0 | 0 | 0 | 0 | 1 | 1 | 1 | 1 | 1 | 0 | 0 | 0 | 0 | 0 | 0 |
| | Green | GS63 | 0 | 0 | 0 | 0 | 0 | 0 | 1 | 1 | 1 | 1 | 1 | 1 | 0 | 0 | 0 | 0 | 0 | 0 |
| Gray Scale of Blue | Black | GS0 | 0 | 0 | 0 | 0 | 0 | 0 | 0 | 0 | 0 | 0 | 0 | 0 | 0 | 0 | 0 | 0 | 0 | 0 |
| | ⇧ | GS1 | 0 | 0 | 0 | 0 | 0 | 0 | 0 | 0 | 0 | 0 | 0 | 0 | 1 | 0 | 0 | 0 | 0 | 0 |
| | Darker | GS2 | 0 | 0 | 0 | 0 | 0 | 0 | 0 | 0 | 0 | 0 | 0 | 0 | 0 | 1 | 0 | 0 | 0 | 0 |
| | ⇧ | ↓ | | | | ↓ | | | | | | ↓ | | | | | | ↓ | | |
| | ⇩ | ↓ | | | | ↓ | | | | | | ↓ | | | | | | ↓ | | |
| | Brighter | GS61 | 0 | 0 | 0 | 0 | 0 | 0 | 0 | 0 | 0 | 0 | 0 | 0 | 1 | 0 | 1 | 1 | 1 | 1 |
| | ⇩ | GS62 | 0 | 0 | 0 | 0 | 0 | 0 | 0 | 0 | 0 | 0 | 0 | 0 | 0 | 1 | 1 | 1 | 1 | 1 |
| | Blue | GS63 | 0 | 0 | 0 | 0 | 0 | 0 | 0 | 0 | 0 | 0 | 0 | 0 | 1 | 1 | 1 | 1 | 1 | 1 |

0 :Low level voltage, 1 : High level voltage

Each basic color can be displayed in 64 gray scales from 6 bit data signals. According to the combination of total 18 bit data signals, the 262,144-color display can be achieved on the screen.

9. Optical Characteristics

Ta=25℃, Vcc=+3.3V or +5V

| Parameter | | Symbol | Condition | Min | Typ | Max | Unit | Remark |
|---|---|---|---|---|---|---|---|---|
| Viewing Angle Range | Horizontal | θ 21, θ 22 | CR＞10 | 60 | 70 | — | Deg. | 【Note1,4】 |
| | Vertical | θ 11 | | 35 | 40 | — | Deg. | |
| | | θ 12 | | 55 | 70 | — | Deg. | |
| Contrast ratio | | CR | θ =0° | 150 | — | — | — | 【Note2,4】 |
| | | | Optimum Viewing Angle | — | 300 | — | — | |
| Response Time | Rise | τ r | θ =0° | — | 10 | — | m s | 【Note3,4】 |
| | Decay | τ d | | — | 25 | — | m s | |
| Chromaticity of White | | x | | — | 0.313 | — | | 【Note4】 |
| | | y | | — | 0.329 | — | | $I_L$=6.0mArms |
| Luminance of white | | $Y_L$ | | 280 | 350 | — | cd/m² | f=60kHz |
| White Unifomity | | δ w | | — | — | 1.45 | — | 【Note5】 |
| Viewing Angle range as a Brightness Definition | Horizontal | θ 21, θ 22 | 50% of the maximum brightness | — | 35 | — | Deg. | 【Note1】 |
| | Vertical | θ 11 | | — | 25 | — | Deg. | (Reference value) |
| | | θ 12 | | — | 30 | — | Deg. | |

※The measurement shall be executed 30 minutes after lighting at rating. (condition:$I_L$=6.0mArms)

The optical characteristics shall be measured in a dark room or equivalent state with the method shown in Fig.3 below.

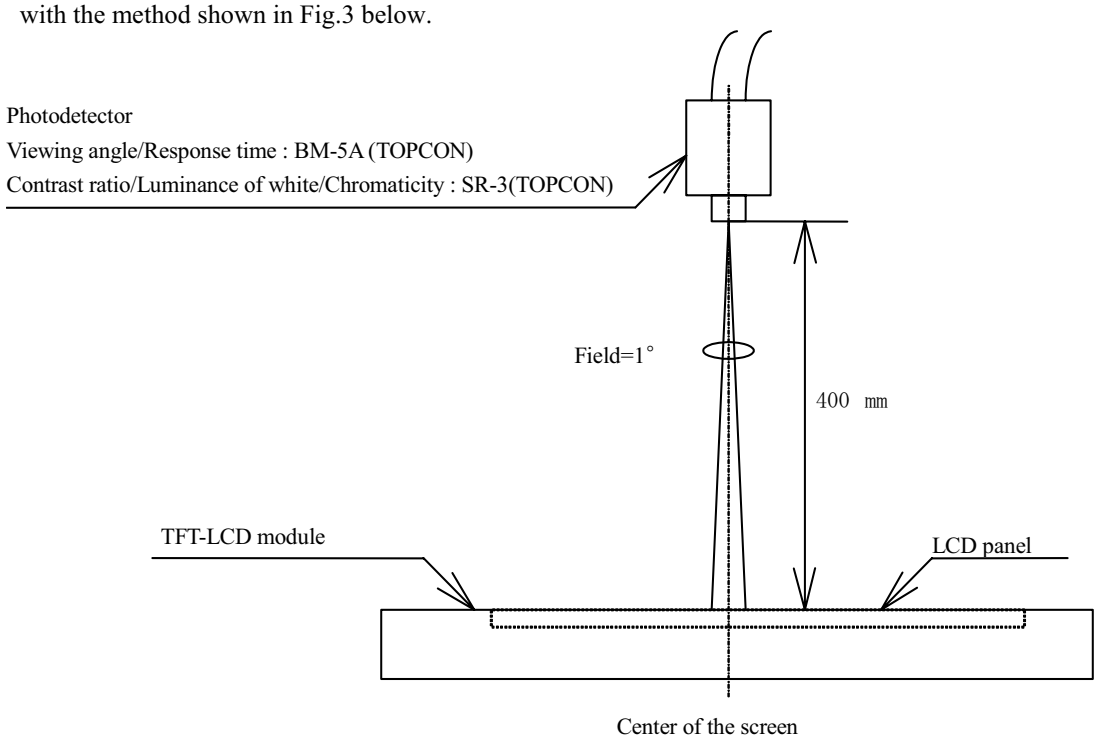


Fig.3 Optical characteristics measurement method

【Note1】Definitions of viewing angle range:

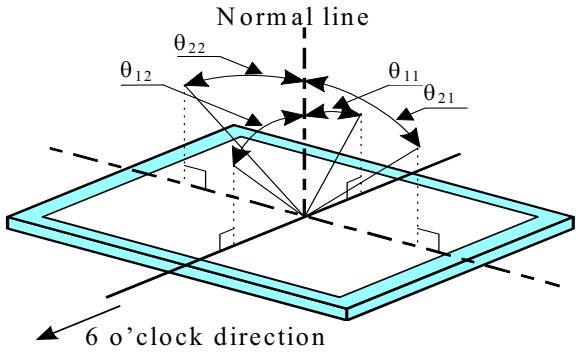


【Note2】Definition of contrast ratio:

The contrast ratio is defined as the following.

$$\text{Contrast Ratio (CR)} = \frac{\text{Luminance (brightness) with all pixels white}}{\text{Luminance (brightness) with all pixels black}}$$

【Note3】Definition of response time:

The response time is defined as the following figure and shall be measured by switching the input signal for "black" and "white" .

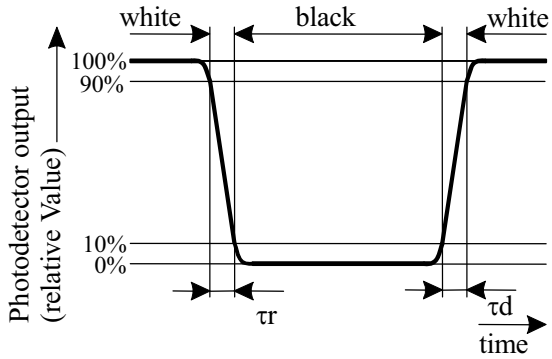


【Note4】This shall be measured at center of the screen.

【Note5】Definition of white uniformity:

White uniformity is defined as the following with five measurements (A～E).

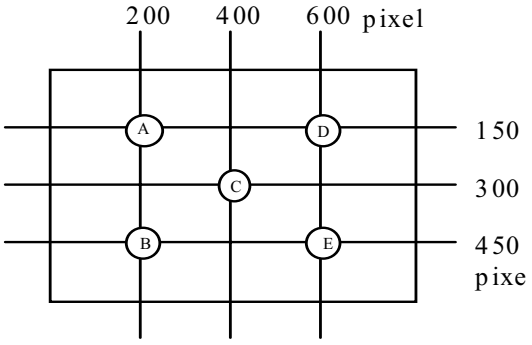


$$\delta_W = \frac{\text{Maximum Luminance of five points (brightness)}}{\text{Minimum Luminance of five points (brightness)}}$$

10. Display Quality

The display quality of the color TFT-LCD module shall be in compliance with the Incoming Inspection Standard.

11. Handling Precautions

a) Be sure to turn off the power supply when inserting or disconnecting the cable.

b) Be sure to design the cabinet so that the module can be installed without any extra stress such as warp or twist.

c) Since the front polarizer is easily damaged, pay attention not to scratch it.

d) Wipe off water drop immediately. Long contact with water may cause discoloration or spots.

e) When the panel surface is soiled, wipe it with absorbent cotton or other soft cloth.

f) Since the panel is made of glass, it may break or crack if dropped or bumped on hard surface. Handle with care.

g) Since CMOS LSI is used in this module, take care of static electricity and injure the human earth when handling. Observe all other precautionary requirements in handling electric components.

h) Protection film is attached to the module surface to prevent it from being scratched . Peel the film off slowly , just before the use, with strict attention to electrostatic charges. Blow off 'dust' on the polarizer by using an ionized nitrogen.

i) The polarizer surface on the panel is treated with Anti-Glare for low reflection. In case of attaching protective board over the LCD. Be careful about the optical interface fringe etc. Which degrades display quality.

j) Do not expose the LCD panel to direct sunlight. Lightproof shade etc. should be attached when LCD panel is used under such environment.

k) Connect GND to 4 place of mounting holes to stabilize against EMI and external noise.

l) There are high voltage portions on the backlight and very dangerous. Careless touch may lead to electrical shock. When exchange lamps or service. Turn off the power without tail.

m) When handling LCD modules and assembling them into cabinets, please be noted that long-term storage in the environment of oxidization or deoxidization gas and the use of such materials as reagent, solvent, adhesive, resin, etc. which generate these gasses, may cause corrosion and discoloration of the LCD modules.

n)Cold cathode fluorescent lamp in LCD panel contains a small amount of mercury, please follow local ordinances or regulations for disposal.

o) Be sure not to apply tensile stress to the lamp lead cable.

12.Packing form

| Product country | JAPAN | TAIWAN |
|---|---|---|
| Piling number of cartons | 5（Max） | |
| Packing quantity in one carton | 20 | |
| Carton size [mm] | 494(W)×326(D)×433(H) | |
| Total mass of one carton filled with full modules | 15.6kg | |

13. Reliability test items

| No. | Test item | Conditions | Remark |
|---|---|---|---|
| 1 | High temperature<br>& high humidity storage test | Ta= 50℃ ; 95%RH 240h<br>(No condensation) | |
| 2 | High temperature storage test | Ta= 70℃ 240h | |
| 3 | Low temperature storage test | Ta= -35℃ 240h | |
| 4 | High temperature<br>& high humidity operation test | Ta= 40℃ ; 95%RH 240h<br>(No condensation) | |
| 5 | High temperature operation test | Ta= 65℃ 240h | |
| 6 | Low temperature operation test | Ta= -10℃ 240h | |
| 7 | Vibration test<br>(non- operating) | Frequency: 10～57Hz/Vibration width (one side):0.075mm<br>: 58～500Hz/Gravity:9.8m/s$^2$<br>Sweep time : 11 minutes<br>Test period : 3 hours<br>(1 hour for each direction of X,Y,Z) | |
| 8 | Shock test<br>(non- operating) | Max. gravity : 490m/s$^2$<br>Pulse width : 11ms, half sine wave<br>Direction : ±X,±Y,±Z<br>once for each direction. | |
| 9 | ESD test | Contact discharge (150pF 330Ω)<br>non-operating = ±10kV, operating = ±8kV<br>Atmospheric discharge (150pF 330Ω)<br>non-operating = ±20kV, operating = ±15kV | |
| 10 | EMI | Measurement in 10m site<br>Display position on the screen = "H" (full-screen),<br>GND to 4 place = un-connect, Vcc / Vsignal = typ. | VCCI<br>(ClassB) |

【Result Evaluation Criteria】

Under the display quality test conditions with normal operation state, these shall be no change which may affect practical display function.

14. Others

1) Label

Module

Case 1) Japan product only




Model No.

Lot No.

Case 2) Taiwan product only




Packing box

①Model NO.②ShipmentDate ③ Quantity

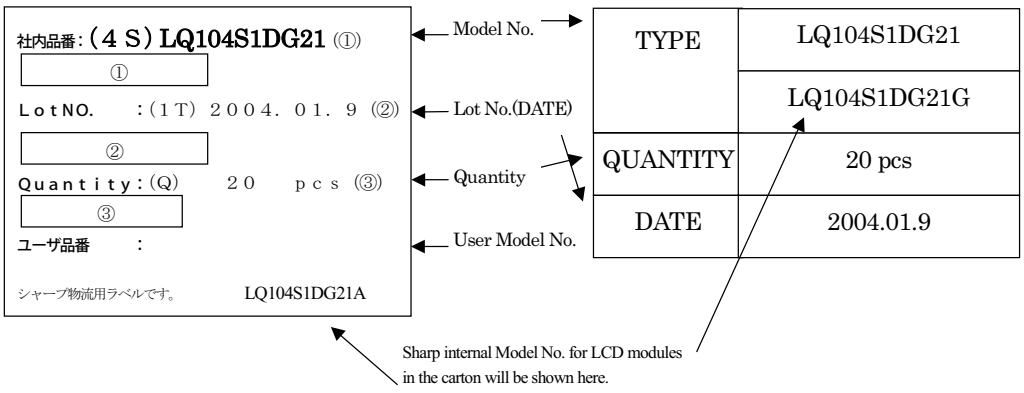

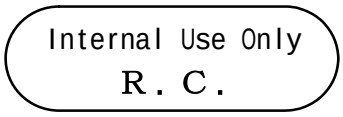


※R.C.（RoHS Compliance） means these parts have corresponded with the RoHS directive.

2) Adjusting volume have been set optimally before shipment, so do not change any adjusted value.
If adjusted value is changed, the specification may not be satisfied.
3) Disassembling the module can cause permanent damage and should be strictly avoided.
4) Please be careful since image retention may occur when a fixed pattern is displayed for a long time.
5) If any problem occurs in relation to the description of this specification , it shall be resolved through discussion with spirit of cooperation.

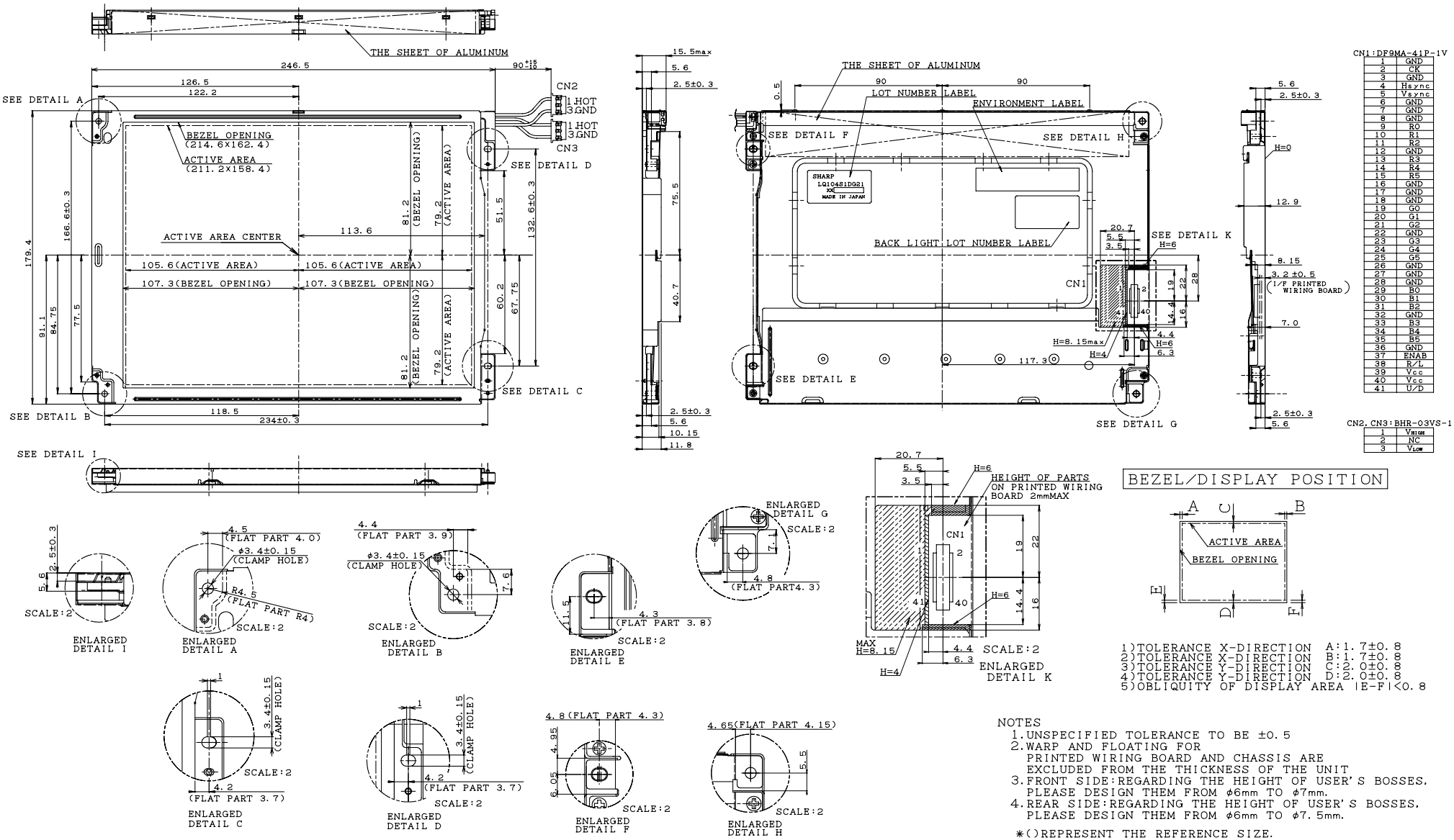


CN1:DF9MA-41P-1V

| | |
|---|---|
| 1 | GND |
| 2 | CK |
| 3 | GND |
| 4 | Hsync |
| 5 | Vsync |
| 6 | GND |
| 7 | GND |
| 8 | GND |
| 9 | RO |
| 10 | R1 |
| 11 | R2 |
| 12 | GND |
| 13 | R3 |
| 14 | R4 |
| 15 | R5 |
| 16 | GND |
| 17 | GND |
| 18 | GND |
| 19 | GO |
| 20 | G1 |
| 21 | G2 |
| 22 | GND |
| 23 | G3 |
| 24 | G4 |
| 25 | G5 |
| 26 | GND |
| 27 | GND |
| 28 | GND |
| 29 | BO |
| 30 | B1 |
| 31 | B2 |
| 32 | GND |
| 33 | B3 |
| 34 | B4 |
| 35 | B5 |
| 36 | GND |
| 37 | ENAB |
| 38 | R/L |
| 39 | Vcc |
| 40 | Vcc |
| 41 | U/D |

CN2,CN3:BHR-03VS-1

| | |
|---|---|
| 1 | $V_{HIGH}$ |
| 2 | NC |
| 3 | $V_{LOW}$ |

1)TOLERANCE X-DIRECTION A:1.7±0.8
2)TOLERANCE X-DIRECTION B:1.7±0.8
3)TOLERANCE Y-DIRECTION C:2.0±0.8
4)TOLERANCE Y-DIRECTION D:2.0±0.8
5)OBLIQUITY OF DISPLAY AREA |E-F|<0.8

NOTES
1. UNSPECIFIED TOLERANCE TO BE ±0.5
2. WARP AND FLOATING FOR PRINTED WIRING BOARD AND CHASSIS ARE EXCLUDED FROM THE THICKNESS OF THE UNIT
3. FRONT SIDE:REGARDING THE HEIGHT OF USER'S BOSSES, PLEASE DESIGN THEM FROM ϕ6mm TO ϕ7mm.
4. REAR SIDE:REGARDING THE HEIGHT OF USER'S BOSSES, PLEASE DESIGN THEM FROM ϕ6mm TO ϕ7.5mm.

∗()REPRESENT THE REFERENCE SIZE.

# OUTLINE DIMENSIONS

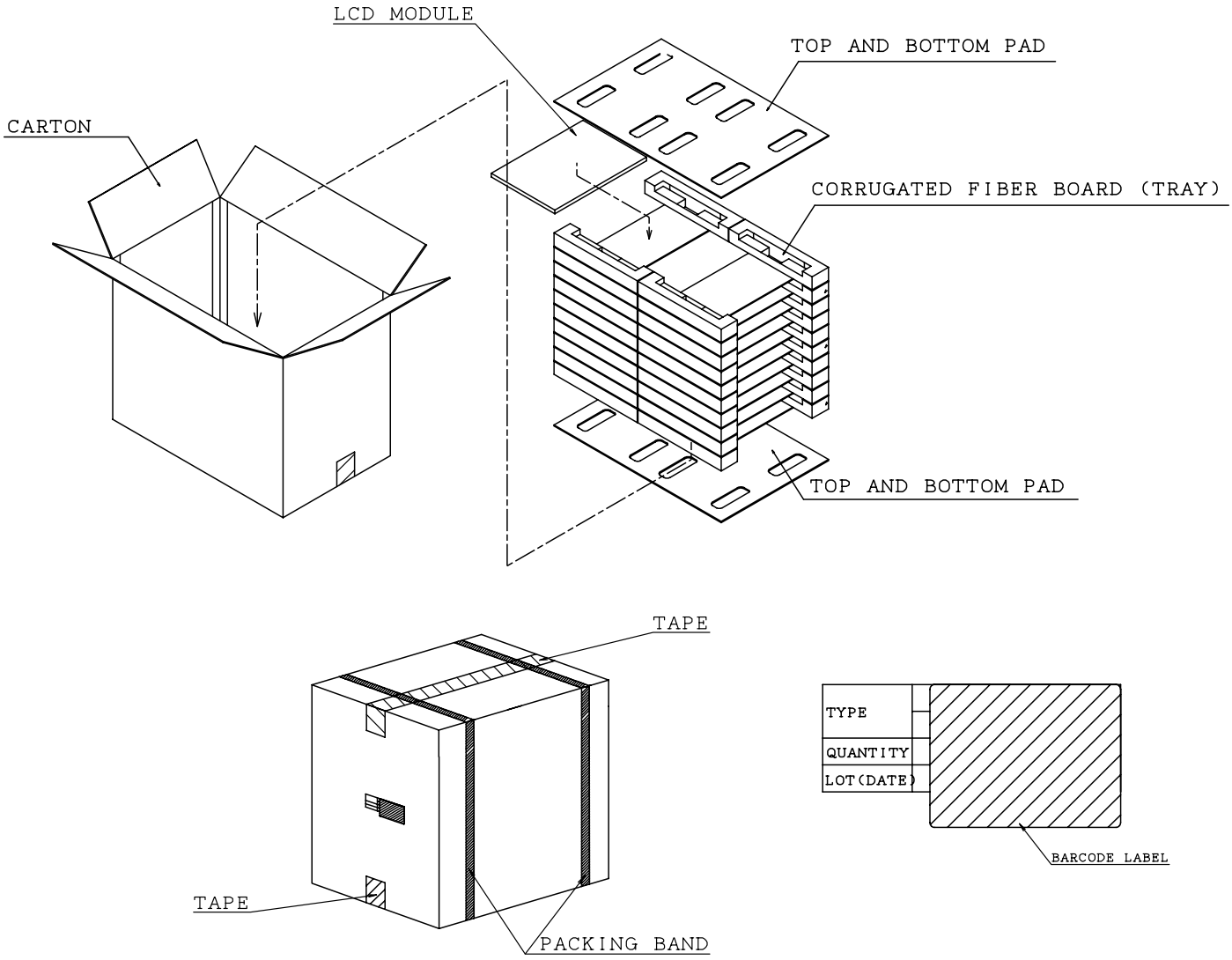


FIG. 3:PACKING FORM

# NOTICE

This publication is the proprietary of SHARP and is copyrighted, with all rights reserved. Under the copyright laws, no part of this publication may be reproduced or transmitted in any form or by any means, electronic or mechanical for any purpose, in whole or in part, without the express written permission of SHARP Express written permission is also required before any use of this publication may be made by a third party.

The application circuit examples in this publication are provided to explain the representative applications of SHARP's devices and are not intended to guarantee any circuit design or permit any industrial property right or other rights to be executed. SHARP takes no responsibility for any problems related to any industrial property right or a third party resulting from the use of SHARP's devices, except for those resulting directly from device manufacturing processes.

In the absence of confirmation by device specification sheets, SHARP takes no responsibility for any defects that occur in equipment using any of SHARP's devices, shown in catalogs, data books, etc. Contact SHARP in order to obtain the latest device specification sheets before using any SHARP's device.

SHARP reserves the right to make changes in the specifications, characteristics, data, materials, structures and other contents described herein at any time without notice in order to improve design or reliability. Contact SHARP in order to obtain the latest specification sheets before using any SHARP's device. Manufacturing locations are also subject to change without notice.

Observe the following points when using any device in this publication. SHARP takes no responsibility for damage caused by improper use *of the devices.*

The appropriate design measures should be taken to ensure reliability and safety when SHARP's devices are used for equipment such as:

- Transportation control and safety equipment (i.e., aircraft, trains, automobiles, etc.)
- Traffic signals
- Alarm equipment
- Gas leakage sensor breakers
- Various safety devices etc.

SHARP's devices shall not be used for equipment that requires extremely high level of reliability, such as:

- Military and space applications
- Nuclear power control equipment
- Medical equipment for life support

Contact a SHARP representative, in advance, when intending to use SHARP's devices for any "specific" applications other than those recommended by SHARP.

Contact and consult with a SHARP representative if there are any questions about the contents of this publication.

**SPECIFICATIONS ARE SUBJECT TO CHANGE WITHOUT NOTICE.**

Suggested applications (if any) are for standard use; See Important Restrictions for limitations on special applications. See Limited Warranty for SHARP's product warranty. The Limited Warranty is in lieu, and exclusive of, all other warranties, express or implied. ALL EXPRESS AND IMPLIED WARRANTIES, INCLUDING THE WARRANTIES OF MERCHANTABILITY, FITNESS FOR USE AND FITNESS FOR A PARTICULAR PURPOSE, ARE SPECIFICALLY EXCLUDED. In no event will SHARP be liable, or in any way responsible, for any incidental or consequential economic or property damage.

---

SHARP®


**NORTH AMERICA**

SHARP Microelectronics of the Americas
5700 NW Pacific Rim Blvd.
Camas, WA 98607, U.S.A.
Phone: (1) 360-834-2500
Fax: (1) 360-834-8903
Fast Info: (1) 800-833-9437
www.sharpsma.com

**EUROPE**

SHARP Microelectronics Europe
Division of Sharp Electronics (Europe) GmbH
Sonninstrasse 3
20097 Hamburg, Germany
Phone: (49) 40-2376-2286
Fax: (49) 40-2376-2232
www.sharpsme.com

**JAPAN**

SHARP Corporation
Electronic Components & Devices
22-22 Nagaike-cho, Abeno-Ku
Osaka 545-8522, Japan
Phone: (81) 6-6621-1221
Fax: (81) 6117-725300/6117-725301
www.sharp-world.com

**TAIWAN**

SHARP Electronic Components
(Taiwan) Corporation
8F-A, No. 16, Sec. 4, Nanking E. Rd.
Taipei, Taiwan, Republic of China
Phone: (886) 2-2577-7341
Fax: (886) 2-2577-7326/2-2577-7328

**SINGAPORE**

SHARP Electronics (Singapore) PTE., Ltd.
438A, Alexandra Road, #05-01/02
Alexandra Technopark,
Singapore 119967
Phone: (65) 271-3566
Fax: (65) 271-3855

**KOREA**

SHARP Electronic Components
(Korea) Corporation
RM 501 Geosung B/D, 541
Dohwa-dong, Mapo-ku
Seoul 121-701, Korea
Phone: (82) 2-711-5813 ~ 8
Fax: (82) 2-711-5819

**CHINA**

SHARP Microelectronics of China
(Shanghai) Co., Ltd.
28 Xin Jin Qiao Road King Tower 16F
Pudong Shanghai, 201206 P.R. China
Phone: (86) 21-5854-7710/21-5834-6056
Fax: (86) 21-5854-4340/21-5834-6057
**Head Office:**
No. 360, Bashen Road,
Xin Development Bldg. 22
Waigaoqiao Free Trade Zone Shanghai
200131 P.R. China
Email: smc@china.global.sharp.co.jp

**HONG KONG**

SHARP-ROXY (Hong Kong) Ltd.
3rd Business Division,
17/F, Admiralty Centre, Tower 1
18 Harcourt Road, Hong Kong
Phone: (852) 28229311
Fax: (852) 28660779
www.sharp.com.hk
**Shenzhen Representative Office:**
Room 13B1, Tower C,
Electronics Science & Technology Building
Shen Nan Zhong Road
Shenzhen, P.R. China
Phone: (86) 755-3273731
Fax: (86) 755-3273735