PRODUCT SPECIFICATIONS

SHARP

Liquid Crystal Displays Group

LQ5AW136

TFT-LCD Module

Spec. Issue Date: Dec. 26, 2005

No: LCY-98037F

PREPARED BY: Yuji Asoh	SHARP	SPEC No. LCY-98037F
		FILE No.
APPROVED BY: Hideaki Yabuuchi		ISSUE: Dec. 26th 2005
		PAGE : 33pages
	MOBILE LIQUID CRYSTAL DISPLAY GROUP SHARP CORPORATION SPECIFICATION	APPLICABLE GROUP MOBILE LIQUID CRYSTAL DISPLAY GROUP

DEVICE SPECIFICATION FOR

TFT-LCD module

MODEL No. LQ5AW136

CUSTOMER'S APPROVAL

DATE _____

BY _____

PRESENTED BY Hiroshi Hamada

H. HAMADA
Department General manager
Engineering Dept.1
Mobile LCD Design center.1
Mobile Liquid Crystal Display Group
SHARP CORPORATION

RECORD OF REVISION

MODEL No : LQ5AW136

SPEC No.	DATE	REVISED No.	PAGE	SUMMARY	NOTE
LCY97041	97.6.30	—		—	1st Issue
LCY98037	98.3.17	—	7	7-1)DC bias voltage～	2nd Issue
				TYP. +1.5V → +2.0V [Change]	
			24	Resister of VCDC line	
				10kΩ → 8.2kΩ [Change]	
LCY98037A	98.9.29	A	—	Color filter and the diffuser film are	3rd Issue
				changed.	
				It changes a model name with the above	
				Change.	
				LQ5AW116 → LQ5AW136 [Change]	
LCY98037B	00.1.21	B	9	Table 9 τpd	4th Issue
				MIN : 0.4μs → 0.7μs	
				MAX : 1.8μs → 1.5μs [Change]	
				Note 7-21	
				τpd=1.1 ± 0.7μs	
				↓	
				τpd=1.1 ± 0.4μs [Change]	
LCY98037C	00.4.10	C	—	①The change of glass thickness from 1.1mm to	5th Issue
				0.7mm	
			—	②Shifting the B/L(back light) unit to	
				upper side by 0.8mm(space gap)	
			—	③The change of thinner LCD driver	
			2	④The weight becomes mass:185g(Max)	
				from 185g:(2)Features	
			3	⑤The weight becomes mass:185g(Max)	
				from 185±10g:(2):Table 1	
LCY98037D	01.2.9	D	—	①Change of polarizer (TAC).	6th Issue
			—	②Position of panel to be down.	
			—	③Additional facility for PCB assembly.	
			—	④Chang of Backlight cable cover.	
			—	⑤Chang of Fig 3. Outline dimensions	
			22	Enlargement of window frame from	
				107.4(H)×79.8(V) to 109.5(H)×80.8(V)mm.	
			—	⑥Chang of variable resistor type	
			—	⑦Chang of Tape thickness to adhere	
				between plastic frame and panel.	

RECORD OF REVISION

MODEL No : LQ5AW136

SPEC No.	DATE	REVISED No.	PAGE	SUMMARY	NOTE
LCY98037E	01.6.15	E	6	Table 6	7th Issue
				Ta=25℃→Top1=−30～+85℃ [Change]	
			15	Mechanical Noise [addition]	
			18	Indication of lot number [Change]	
LCY98037F		F	2	This module is adapted to RoHS compliance. [addition]	8th Issue
			14	00-6200-522-330-000 → 00-6200-522-380-000+ [Change]	
			18	Model number : LQ5AW136 → LQ5AW136 R [Change]	

NOTICE

This publication is the proprietary of SHARP and is copyrighted, with all rights reserved. Under the copyright laws, no part of this publication may be reproduced or transmitted in any form or by any means, electronic or mechanical for any purpose, in whole or in part, without the express written permission of SHARP. Express written permission is also required before any use of this publication may be made by a third party.

The application circuit examples in this publication are provided to explain the representative applications of SHARP's devices and are not intended to guarantee any circuit design or permit any industrial property right or other rights to be executed. SHARP takes no responsibility for any problems related to any industrial property right or a third party resulting from the use of SHARP's devices, except for those resulting directly from device manufacturing processes.

In the absence of confirmation by device specification sheets, SHARP takes no responsibility for any defects that occur in equipment using any of SHARP's devices, shown in catalogs, data books, etc. Contact SHARP in order to obtain the latest device specification sheets before using any SHARP's device.

SHARP reserves the right to make changes in the specifications, characteristics, data, materials, structures and other contents described herein at any time without notice in order to improve design or reliability. Contact SHARP in order to obtain the latest specification sheets before using any SHARP's device. Manufacturing locations are also subject to change without notice.

Observe the following points when using any device in this publication. SHARP takes no responsibility for damage caused by improper use of the devices.

The devices in this publication are designed for use in general electronic equipment designs, such as:

- Personal computers
- Office automation
- Telecommunication equipment
- Test and measurement equipment
- Industrial control
- Audio visual and multimedia equipment
- Consumer electronics

The appropriate design measures should be taken to ensure reliability and safety when SHARP's devices are used for equipment such as:

- Transportation control and safety equipment(i.e., aircraft, trains, automobiles, etc.)
- Traffic signals
- Gas leakage sensor breakers
- Alarm equipment
- Various safety devices etc.

SHARP's devices shall not be used for equipment that requires extremely high level of reliability, such as:

- Military and space applications
- Nuclear power control equipment
- Medical equipment for life support

Contact a SHARP representative, in advance, when intending to use SHARP's devices for any "specific" applications other than those recommended by SHARP.

Contact and consult with a SHARP representative if there are any questions about the contents of this publication.

CONTENTS

Page

(1) Introduction ·····2
(2) Features ·····2
(3) Construction and Outline ·····2
(4) Module geometry ·····3
(5) Input/Output symbol and description ·····3
(6) Absolute maximum ratings ·····5
(7) Electrical characteristics ·····6
(8) Optical characteristics ·····11
(9) Mechanical characteristics ·····13
(10) Display quality ·····15
(11) Mechanical noise ·····15
(12) Handling instructions ·····15
(13) Shipping requirements ·····18
(14) Reliability test items ·····18
(15) Others ·····18

Attached Figures

Fig 1. Illustration of TFT-LCD panel ·····20
Fig 2. Construction of TFT-LCD module ·····21
Fig 3. Outline dimensions of TFT-LCD module ·····22
Fig 4. Circuit block diagram of TFT-LCD module ·····23
Fig 5. Recommended circuit to be referred ·····24
Fig 6. Input /Output signal waveforms ·····25
Fig 7. PWM signal waveforms for dimming backlight ·····29
Fig 8. Paking form ·····30
Fig 9. Optical characteristics ·····31

Attached sheets

(Appendix-1) Adjusting method of optical common electrode DC bias voltage ·····32
(Appendix-2) Electrical display rotating function ·····33

(1) Introduction

The SHARP Color TFT-LCD module is an active matrix LCD (Liquid Crystal Display) produced by making the most of Sharp's expertise in liquid-crystal and semiconductor technologies. The active device is amorphous silicon TFT (Thin Film Transistor). The module accepts full color video signal conforming to the NTSC(M) and PAL(B・G) system standards.

It can withstand an intense environment, the outline dimension is suitable for an auto-mobile display, compatible with 2DIN size.

(2) Features

- Dual mode type.[NTSC(M) and PAL(B・G) standards]
- MBK-PAL, or MaBiKi("thinning" in Japanese)-PAL which enables the 234-scanning lines panel to display a picture with virtually 273-scanning lines.
- TFT-active matrix-LCD drive system with high-contrast.
- 74,880 pixels (RGB stripe configuration and full color) 5" diagonal size.
- Slim, lightweight and compact
  ①Active area/Outline area=70% ②Thickness:16.5mm ③Mass:185 g (Max)
- Built-in video interface circuit and control circuit responsive to two sets of standard R・G・B analog video signals.
- Reduced reflection as a result of low reflectance Black-Matrix and Anti-Glared front polarizer being adopted.
- It is possible to use both the simultaneous and the independent time sampling.
- An external clock mode is available.
- Optical viewing angle : wide view angle (6 o'clock direction.)
  (Customers can use this module as a '12 o'clock viewing direction type' by using a display rotating function to rotate right/left and up/down scanning direction electrically.)
- This module includes a high luminance edge light that is excellent at low temperature.
- It is possible to use the dimming frequency(PWM) for backlight.

- This module is adapted to RoHS compliance.

(3) Construction and Outline

- Outline dimensions of TFT-LCD module: See Fig.3
- The module consists of a TFT-LCD panel, driver ICs, control PWB mounted with electronic circuits, edge light , frame, front and rear shielding cases.
  (Backlight driving DC/AC inverter is not built in the module.)

(4) Module geometry(Mechanical specification)

Table 1

Parameter	Specification	Unit	Remarks
Display format	74,880	Pixels	
	960(H)×234(V)	dots	
Active area	102.2(H)×74.8(V)	mm	
Screen size(Diagonal)	13 [5"]	cm	
Dot pitch	0.1065(H)×0.3195(V)	mm	
Dot configuration	R·G·B Stripe configuration		
Outline dimension	126.8(W)×89.6(H)×16.5(D)	mm	【Note 4-1】
Mass	185(Max)	g	

【Note 4-1】 This measurement is typical, and see Fig.3 for the details.

(5) Input/output terminals and their descriptions

5-1)TFT-LCD panel driving section

Table 2 (Hi means digital input voltage, Lo means GND.)

Pin No.	Symbol	i/o	Description	Remarks
1	HSY	i , o	Input/output horizontal sync. Signal (low active)	【Note 5-1】
2	VSY	i , o	Input/output vertical sync. Signal (low active)	【Note 5-2】
3	PWM	o	Terminal for output PWM of dimming back light.	【Note 5-3】
4	NTP	i	Terminal for display mode change of NTSC and PAL	【Note 5-4】
5	HRV	i	Turning the direction of horizontal scanning	【Note 5-5】
6	VRV	i	Turning the direction of vertical scanning	【Note 5-6】
7	VSW	i	Selection signal of two sets of video signals	【Note 5-7】
8	SAM	i	Terminal for sampling mode change	【Note 5-8】
9	V_{CDC}	i	DC bias voltage adjusting terminal of common electrode driving signal	【Note 5-9】
10	VSH	i	Positive power supply voltage	
11	VBS	i	Composite video signal for sync. separator	【Note 5-10】
12	BRT	i	Brightness adjusting terminal	【Note 5-11】
13	VR1	i	Color video signal (Red) 1	Positive (On When VSW=Hi.)
14	VG1	i	Color video signal (Green) 1	Ditto
15	VB1	i	Color video signal (Blue) 1	Ditto
16	VSL	i	Negative power supply voltage	
17	VR2	i	Color video signal (Red) 2	Positive (On When VSW=Lo.)
18	VG2	i	Color video signal (Green) 2	Ditto
19	VB2	i	Color video signal (Blue) 2	Ditto
20	GND	i	Ground	
21	CLKC	i	Change the input/output direction of CLK,HSY and VSY	【Note 5-12】
22	CLK	i , o	Input/output clock signal	【Note 5-13】

【Note 5-1】 If CLKC='Hi' , this terminal outputs horizontal sync. signal in phase with VBS.
If CLKC='Lo' , this terminal will be external horizontal sync. input terminal.

【Note 5-2】 If CLKC='Hi' , this terminal outputs vertical sync. signal in phase with VBS.
If CLKC='Lo' , this terminal will be external vertical sync. input terminal.

【Note 5-3】 PWM signal is used for the PWM dimming frequency and it is easy to get PWM signal dimming by combining both HSY and PWM signal. But please use this PWM signal just in case of inputting standard NTSC or PAL signal.

【Note 5-4】 This terminal is to switch display mode, and it is NTSC mode when NTP is 'High' and is PAL mode when NTP is 'LOW'.

【Note 5-5】 When this terminal is 'High', it will be normal and when it is 'LOW', it will display reversely on horizontal direction.

【Note 5-6】 When this terminal is 'High', it will be normal and when it is 'LOW', it will display reversely on vertical direction.

【Note 5-7】 This terminal is to switch input for groups of R,G,B color video signals, and Input 1 (No. 13 to 15) is selected when VSW is 'High' and Input 2 (No. 17 to 19) is selected when VSW is 'LOW'.

【Note 5-8】 This terminal is to switch sampling mode. It is the <u>independent</u> data-sampling timing at RGB dots when SAM is 'High' and it is the <u>simultaneous</u> data-sampling timing at RGB dots when SAM is 'LOW'.

【Note 5-9】 This terminal is applicable to the DC bias voltage adjusting terminal of common electrode driving signal. If power supply voltage is typical, it is not necessary to re-adjust it, so use it in the open condition.
However, in the case that power supply voltage is changed, or power supply voltage is reduced, please adjust it externally to get the best contrast with a resistor you add to this terminal, or semifixed resistor, VCDC, in module. A recommended circuit is shown in Fig. 5.

【Note 5-10】 The sync. signal which will be input, is negative polarity, and is applicable to standard composite sync. signal, negative one, in the same pulse level.

【Note 5-11】 DC voltage supplied to this terminal, makes the brightness of screen adjustable, that is, the black level of video signal adjustable.
Although this is adjusted in the time of delivery to get the best display in the condition of open terminal, you will be able to re-adjust it externally with a resistor you add to this terminal, or a semifixed resistor, BRT, in module. A recommended circuit is shown in Fig. 5.

【Note 5-12】 CLKC='Hi' :CLK,HSY,VSY terminals are output mode.
CLKC='Lo' :CLK,HSY,VSY terminals are input mode.

【Note 5-13】 If CLKC='Hi', this terminal outputs the clock for source drivers.
If CLKC='Lo', this terminal will be external clock input terminal.

5-2) Functional matching and Input/Output mode

Table 3

	CLKC="Hi"		CLKC="Lo"	
Terminal	SAM="Hi"	SAM="Lo"	SAM="Hi"	SAM="Lo"
HSY	Output	Output	Input	Input
VSY	Output	Output	Input	Input
CLK	Output "Dot clock"	Output "Pixel clock"	Input "Dot clock"	Input "Pixel clock"

5-3) Backlight driving section

Table 4

terminals	No.	symbol	i/o	function	note
CN1	1	VL1	i	input terminal(hi voltage side)	【Note 5-14】
	2	NC	−	non connection	
	3	VL2	i	input terminal(low voltage side)	

【Note 5-14】 low Voltage side of DC/AC inverter for backlight driving connects with Ground of inverter circuit.

(6) Absolute maximum ratings

Table 5 GND=0V、Ta=25℃

Parameter		Symbol	MIN	MAX	Unit	Remarks
Positive power supply voltage		V_{SH}	−0.3	+9.0	V	
Negative power supply voltage		V_{SL}	−6.0	+0.3	V	
Analog input signals		Vi	−	2.0	Vp-p	【Note 6-1】
Digital input/output signals		VI	−0.3	+5.4	V	【Note 6-2】
DC bias voltage of common electrode driving signal		V_{CDC}	V_{SL}	V_{SH}	V	
Brightness adjusting signal		V_{BRT}	0	+5.1	V	
Storage temperature		Tstg	−30	85	℃	【Note 6-3】
Operating temperature	surface of panel	Top1	−30	85	℃	【Note 6-3,4】
	environment	Top2	−30	60	℃	【Ditto】

【Note 6-1】 VBS, VR1, VG1, VB1, VR2, VG2, VB2 terminals(Video signal)

【Note 6-2】 NTP, HRV, VRV, SAM, VSW, HSY, CLKC, CLK terminals

【Note 6-3】 The temperature of all parts in module should not be exceeding this rating. Maximum wet-bulb temperature should less than 58℃. No dew condensation.

【Note 6-4】 Operating temperature assure only driving. Contrast, response time, the other display quality is judgment at 25℃.

(7) Electrical characteristics

7-1) Recommended operating condition

A) TFT-LCD panel driving section

Table 6

GND=0V、Top1=−30~85℃

Parameter			Symbol	MIN	TYP	MAX	Unit	Remarks	
Positive power supply voltage			V_{SH}	+7.8	+8.0	+8.2	V	【Note 7-1】	
Negative power supply voltage			V_{SL}	−5.2	−5.0	−4.8	V		
Analog input voltage	Amplitude		VBS	0.7	1.0	2.0	Vp-p		Input resister is over 10kΩ.
			Vi	−	0.7	−	Vp-p	【Note 7-2】	
	DC component		V_{IDC}	−1.0	0	+1.0	V	【Note 7-3】	
Digital input voltage	High level		V_{IH}	+3.7	−	+5.1	V	Input resister is over 10kΩ. 【Note 7-4】	
	Low level		V_{IL}	0	−	+1.0	V		
	Histeresis		V_H	0.4	−	−	V		
Digital output voltage	High level		V_{OH}	+4.0	−	+5.5	V	Load resister is over 60kΩ. 【Note 7-5】	
	Low level		V_{OL}	0	−	+1.0	V		
Output clock	Duty cycle		Duty	45/55	50/50	55/45	−	CLKC="Hi" 【Note 7-6】	
	Drive capability		I_{OH}	−	−	0.25	mA	V_{OH}=2.6V	【Note 7-7】
			I_{OL}	−0.28	−	−	mA	$V_{O\cdot L}$=2.3V	
Input horizontal sync. component	freq.	NTSC	$f_{H(N)}$	15.13	15.73	16.33	kHz	CLKC="Hi" 【Note 7-8】 for VBS terminal	
		PAL	$f_{H(P)}$	15.03	15.63	16.23	kHz		
	pulse width	NTSC	$\tau_{HI(N)}$	4.2	4.7	5.2	μs		
		PAL	$\tau_{HI(P)}$	4.2	4.7	5.2	μs		
	rise time		τ_{rHI1}	−	−	0.5	μs		
	fall time		τ_{fHI1}	−	−	0.5	μs		
Input vertical sync. component	freq.	NTSC	$f_{V(N)}$	f_H/284	f_H/262	f_H/258	Hz	CLKC="Hi", H=1/f_H 【Note 7-9】 for VBS terminal	
		PAL	$f_{V(P)}$	f_H/344	f_H/312	f_H/304	Hz		
	pulse width	NTSC	$\tau_{VI(N)}$	−	3H	−	μs		
		PAL	$\tau_{VI(P)}$	−	2.5H	−	μs		
	rise time		τ_{rVI1}	−	−	0.5	μs		
	fall time		τ_{fVI1}	−	−	0.5	μs		
Input clock	frequency		f_{CLI}	18.2	18.9	19.6	MHz	SAM="Hi"	CLKC="Lo" 【Note 7-10】
			f_{CLI}	6.0	6.8	7.6	MHz	SAM="Lo"	
	'Hi' width		τ_{WH}	20.0	−	−	ns	for CLK terminal	
	'Lo' width		τ_{WL}	20.0	−	−	ns		
	rise time		τ_{rCLI}	−	−	5.0	ns		
	fall time		τ_{fCLI}	−	−	5.0	ns		
Input HSY (Horizontal sync.)	frequency		f_{HI}	f_{CLI}/1230	f_{CLI}/1200	f_{CLI}/1170	Hz	SAM="Hi"	CLKC="Lo" 【Note 7-11】
			f_{HI}	f_{CLI}/465	f_{CLI}/435	f_{CLI}/405	Hz	SAM="Lo"	
	pulse width		τ_{HI}	1.0	4.7	8.4	μs	for HSY terminal	
	rise time		τ_{rHI1}	−	−	0.05	μs		
	fall time		τ_{fHI1}	−	−	0.05	μs		
Input VSY (Vertical sync.)	frequency		f_{VI}	50	f_{HI}/262	f_{HI}/258	Hz	【Note 7-12】 CLKC="Lo" for VSY terminal	
	pulse width		$\tau_{VI(P)}$	1H	3H	5H	μs		
	rise time		τ_{rVI2}	−	−	0.5	μs		
	fall time		τ_{fVI2}	−	−	0.5	μs		
Data set up time			t_{SU1}	25	−	−	ns	【Note 7-13】	CLKC="Lo"
Data hold time			t_{HO1}	25	−	−	ns		
Data set up time			t_{SU2}	1.0	−	−	μs	【Note 7-14】	
Data hold time			t_{HO2}	1.0	−	−	μs		

Parameter	Symbol	MIN	TYP	MAX	Unit	Remarks
DC bias voltage for common electrode driving signal	V_{CDC}	+0.0	+2.0	+3.0	V	DC component 【Note 7-15】
Terminal voltage applicable to brightness	V_{BRT}	+2.0	+2.3	+2.4	V	

【Note 7-1】 Power supply voltage should not be changed after adjusting V_{CDC}.
【Note 7-2】 VR1, VG1, VB1, VR2, VG2, VB2 terminals (Video signal)
【Note 7-3】 VBS, VR1, VG1, VB1, VR2, VG2, VB2 terminals
【Note 7-4】 HSY, VSY, NTP, VSW, HRV, VRV, SAM CLKC, CLK terminals
【Note 7-5】 HSY, VSY, CLK terminals (output mode)
【Note 7-6】 CLK terminals (output mode)
【Note 7-7】 Duty cycle is defined as follows.

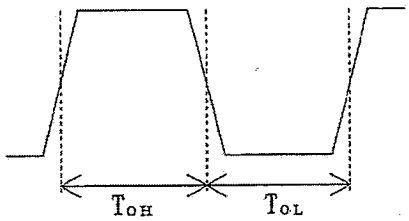

$Duty = T_{OL}/T_{OH}$

【Note 7-8】 VBS (horizontal sync. component)
【Note 7-9】 VBS (vertical sync. component)
【Note 7-10】 CLK (input mode)
【Note 7-11】 HSY (input mode)
【Note 7-12】 VSY (input mode)
【Note 7-13】 In case of CLKC='Lo', it shows the phase difference from HSY to CLK.
In that case, HSY will be taken at the rise timing of CLK.
【Note 7-14】 In case of CLKC='Lo', it shows the phase difference from VSY to HSY.
In that case, VSY will be taken at the rise timing of HSY.
【Note 7-15】 Adjusting the optimal voltage on every module at the typical value of power supply voltage to get the maximum value of contrast. However, in the case that the power supply voltage is changed, for example, the level of power supply voltage is reduced, please adjust it externally to get the best contrast with a resistor you add to this terminal, or semifixed resistor, VCDC, in module. A recommended circuit is shown in Fig. 5.

B)Backlight driving section

Table 7.

Parameter	symbol	MIN	TYP	MAX	Unit	Remarks
lamp Voltage	VL_7	550	610	670	Vrms	I_L=6.5mArms
lamp current	I_L	3.0	6.5	7.0	mArms	normal operation
lamp frequency	f_L	20	—	70	KHz	
Kick-off voltage	V_S	—	—	1450	Vrms	Ta=+25℃
		—	—	1500	Vrms	Ta=−30℃

7-2)Power consumption

Table 8 Ta=25℃

Parameter	Symbol	Conditions	MIN	TYP	MAX	Unit	Remarks
Positive supply current	I_{SH}	V_{SH}=+8.0V	—	140	170	mA	
Negative supply current	I_{SL}	V_{SL}=−5.0V	—	55	70	mA	
Total	W_S		—	1.4	1.7	W	【Note 7-14】
lamp power consumption	W_L	normal driving		4.0	—	W	【Note 7-15】

【Note 7-14】 excluding backlight section

【Note 7-15】 reference data by calculation($I_L \times V_L \times 1$:number of lump)

7-3) Circuit diagram

The circuit block diagram of TFT-LCD module is show in Fig. 4.

B R T, V_{CDC}, external adjusting recommended circuit is show in Fig. 5.

Caution: Turn on or off the power supply (V_{SH} and V_{SL}) at the same time.
Be careful to supply all power voltage before inputting signals.

7-4)Input/output signal waveforms.

They are shown in Fig. 6.

Caution: For the VBS signal, input standard composite video (or sync.) signal applicable to the operating mode which have NTSC(M) or PAL(B・G) and is selected by the NTP signal.
A long time input of non-standard sync. signal may cause flicker or degradation of display quality.

7-5)Dimming backlight by PWM timing chart

In case of using PWM mode, please refer the timing chart shown in Fig. 7.

7-6)Input/Output signal timing chart
It is shown in fig. 6

Table 9 (CLKC="Hi",NTSC:f_H=15.7kHz,fv=60Hz/PAL: f_H=15.6kHz,fv=50Hz)

Parameter		Symbol	MIN	TYP	MAX	Unit	Remarks
Horizontal sync. output pulse [HSY]	pulse width	τ_{HS2}	3.9	3.9	4.6	μs	f=f_H 【Note 7-20】
	phase difference	τ_{pd}	0.7	1.1	1.5	μs	【Note 7-21】
	rise time	τ_{rH0}	—	—	0.5	μs	C_L=10pF
	fall time	τ_{fH0}	—	—	0.5	μs	
Vertical sync. output pulse [VSY]	pulse width	τ_{VS}	—	4H	—	μs	1H=1/f_H
	phase difference	τ_{VH0}	—	11.0	28.0	μs	【Note 7-22】
	rise time	τ_{rV0}	—	—	2.0	μs	C_L=10pF
	fall time	τ_{fV0}	—	—	2.0	μs	
Vertical Phase difference	odd field	τ_{PV1}	—	1H	—	μs	1H=1/f_H 【Note 7-23】
	even field	τ_{PV2}	—	0.5H	—	μs	
Clock output frequency [CLK]	NTSC MODE	f_{CL0}	—	$f_H \times \frac{1201}{2}$	—	MHz	SAMC="Hi"
	PAL MODE	f_{CL0}	—	$f_H \times \frac{1209}{2}$	—	MHz	【Note 7-24】
	NTSC MODE	f_{CL0}	—	$f_H \times \frac{1201}{5}$	—	MHz	SAMC="Lo"
	PAL MODE	f_{CL0}	—	$f_H \times \frac{1209}{5}$	—	MHz	【Note 7-25】

(Supply voltage condition : V_{SH}=+8.0V, V_{SL}=−5.0V)

【Note 7-20】 Adjusted by variable resister (H-POS) in a module.
【Note 7-21】 Variable by variable resister (H-POS) in a module.
adjustment : τ_{pd}=1.1±0.4 μs
【Note 7-22】 Synchronized with HSY, based on falling of HSY.
【Note 7-23】 VSY signal delays.
【Note 7-24】 independent sampling mode.
【Note 7-25】 simultaneous sampling mode.

7-7) Display time range

① NTSC(M) mode (NTP='Hi', CLKC='Hi')

Displaying the following range within video signals.

(a) Horizontally : 12.2 ~ 63 μs from the falling edge of HSY.(SAM='Hi')

: 12.3 ~ 62.9 μs from the falling edge of HSY.(SAM='Lo')

(b)Vertically : 20 ~ 253 H from the falling edge of VSY.

② PAL(B・G) mode (NTP='Lo', CLKC='Hi')

Displaying the following range within video signals.

(a) Horizontally : 13.0 ~ 63.8 μs from the falling edge of HSY.(SAM='Hi')

: 13.1 ~ 63.7 μs from the falling edge of HSY.(SAM='Lo')

(b)Vertically : 26 ~ 298 H from the falling edge of VSY.

However, the video signals of (14n+12)H,(14n+20)H/Even field.

(14n+17)H,(14n+23)H/Odd field (n=1,2···, 20)

are not displayed on the module.

③ External clock mode (NTP='Hi', CLKC='Lo')

Displaying the following range within video signals.

(a) Horizontally : 205 ~ 1164 clk from the falling edge of HSY.(SAM='Hi')

: 84 ~ 403 clk from the falling edge of HSY.(SAM='Lo')

(clk means input external clock.)

(b)Vertically : 20 ~ 253 H from the falling edge of VSY.

(8)Optical characteristics

Table 10 Ta=25℃

Parameter		Symbol	Condition	Min	Typ	Max	Unit	Remarks
Viewing angel range		Δθ11	CR≧5	60	65	—	° (degree)	【Note 8-1,2】
		Δθ12		35	40	—	° (degree)	
		Δθ 2		60	65	—	° (degree)	
Contrast ratio		CRmax	Optimal	60	—	—		【Note 8-2,3】
Response time	Rise	τr	θ=0°	—	30	60	ms	【Note 8-2,4】
	Fall	τd		—	50	100	ms	
Luminance		Y	I_L=6.5mArms	240	320	—	cd/m²	【Note 8-5】
White chromaticity		x	I_L=6.5mArms	0.263	0.313	0.363		【Note 8-5】
		y	I_L=6.5mArms	0.279	0.329	0.379		【Note 8-5】
lamp life time	+25℃	—	continuation	10,000	—	—	hour	【Note 8-6】
	−30℃	—	intermission	2,000	—	—	time	【Note 8-7】

DC/AC inverter for external connection shown in following.

Harison Co. : HIU−288

【Note 8-1】 Viewing angle range is defined as follows.

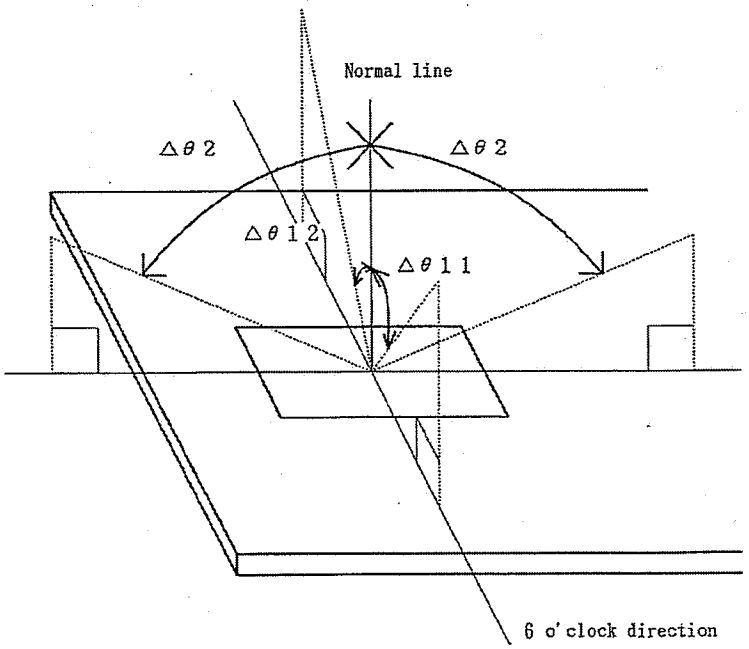

Fig. (i) Definition of viewing angle

【Note 8-2】 Applied voltage condition:

i) V_{CDC} is adjusted so as to attain maximum contrast ratio.

ii) Brightness adjusting voltage (BRT) is open.

iii) Input video signal of standard black level and 100% white level.

【Note 8-3】 Contrast ratio is defined as follows:

$$\text{Contrast ratio(CR)} = \frac{\text{Photodetector output with LCD being "white"}}{\text{Photodetechor output with LCD being "black"}}$$

【Note 8-4】 Response time is obtained by measuring the transition time of photodetector output, when input signals are applied so as to make the area "black" from "white", and "white from "black".

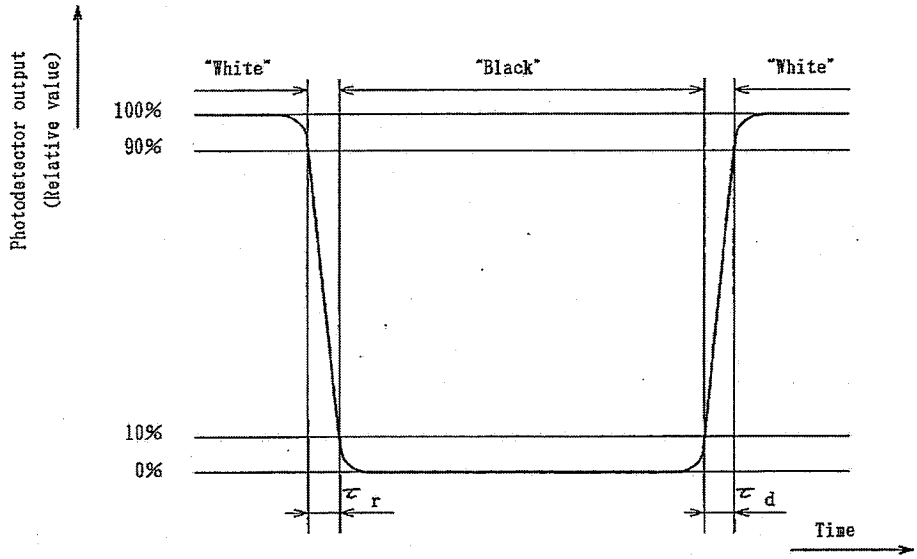

Fig. (ii)

【Note 8-5】 Measured on the center area of the panel at a viewing cone 1° by TOPCON luminance meter BM-7. (After 30 minutes operation)
DC/AC inverter driving frequency:49kHz

【Note 8-6】 Lamp life time is defined as the time when either ① or ② occurs in the continuous operation under the condition of lamp current IL=3～7.0mArms and PWM dimming 100%～5%. (Ta=25℃)

① Brightness becomes 50% of the original value.

② Kick off voltage at Ta=－30℃ exceeds maximum value, 1500Vrms.

【Note 8-7】 The intermittent cycles is defined as a time when brightness becomes 50% of the original value under the condition of following cycle.

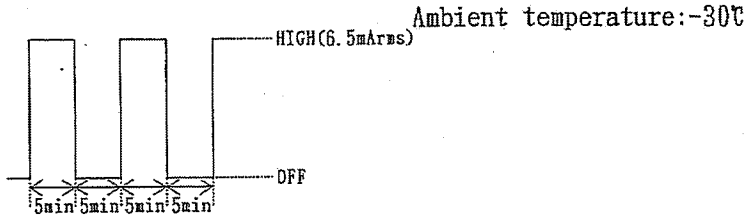

(9)Mechanical characteristics

9-1) External appearance

Extreme defects should not exist. (See Fig. 3)

9-2) Panel toughness

The panel shall not be broken, when 19N is pressed on the center of the panel by a smooth sphere having 15 mm diameter.

Caution: In spite of very soft toughness, if, in the long-term, adding pressure on the active area, it is possible to occur the functional damage.

9-3) Input/output connector

A) Input/output connector for operation of LCD module :

00-6200-522-380-000+ (KYOCERA ELCO CORP.)

An example of applicable FPC is shown in Fig.(iii).

In detail, refer to the recommended FPC/FFC dimensions for above connector.

The terminals of input/output connector are gold-plated in contact with those of FPC/FFC.

Thus it is recommended that the gold or gold-plated terminals of FPC/FFC are used.

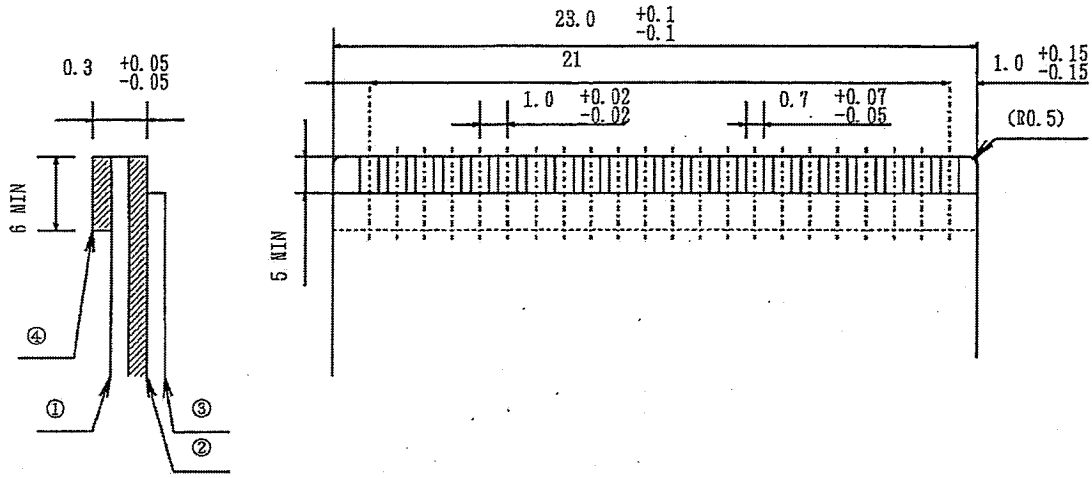

No.	Name	Materials
①	Base material	Polyimide or equivalent material(25 μ m thick)
②	Copper foil	Copper foil(35 μ m thick) Gold plated in 2 to 12 μ m
③	Cover lay	Polyimide or equivalent material
④	Reinforcing plate	Polyester polyimide or equivalent material(188 μ m thick)

Fig. (iii) FPC applied to input/output connector (1.0mm pitch)

B)I/O connector of backlight driving circuit

Symbol	Used Connector	Corresponding connector	Manufacturer
CN1	BHR-0.2(8.0)VS-1N	SM02(8.0)B-BHS-TB(wire to board)	JST
		SM02(8.0)B-BHS-1N(wire to board)	JST
		BHMR-03V(wire to wire)	JST

(10) Display quality

The display quality of the color TFT-LCD module shall be in compliance with the incoming Inspection Standard.

(11) Mechanical noise

No abnormal mechanical noise which can be easily recognized when the module is shaken by hand.

(12) Handling instructions

12-1) Mounting of module

The TFT-LCD module is designed to be mounted on equipment using the mounting tabs in the four corners of the module at the rear side.

On mounting the module, as the M2.6 tapping screw (fastening torque is 0.3 through 0.5N·m) is recommended, be sure to fix the module on the same plane, taking care not to wrap or twist the module.

To pushing module, (ex, touching switch etc.) causes disordered images. so taking care not to conduct directly for LCD module. Please power off module when you connect the input/output connector.

12-2) Precautions in mounting

①Polarizer which is made of soft material and susceptible to flaw must be handled carefully. Protective film (Laminator) is applied on the surface to protect it against scratches and dirts. It is recommended to peel off the laminator immediately before the use, taking care of static electricity.

② Precautions in peeling off the laminator

A) Working environment

When the laminator is peeled off, static electricity may cause dust to stick to the polarizer surface. To avoid this, the following working environment is desirable.

a) Floor: Conductive treatment of 1MΩ or more on the tile
(conductive mat or conductive paint on the tile)

b) Clean room free from dust and with an adhesive mat on the doorway

c) Advisable humidity:50%～70%　Advisable temperature:15℃～27℃

d) Workers shall wear conductive shoes, conductive work clothes, conductive gloves and an earth band.

B) Working procedures

a) Direct the wind of discharging blower somewhat downward to ensure that module is blown sufficiently. Keep the distance between module and discharging blower within 20 cm. (See Fig. (ⅳ～ⅰ).)

b) Attach adhesive tape to the laminator part near discharging blower so as to protect polarizer against flaw. (See Fig. (ⅳ～ⅱ).)

c) Peel off laminator, pulling adhesive tape slowly to your side taking 5 or more seconds.
d) On peeling off the laminator, pass the module to the next work process immediately to prevent the module from getting dust.

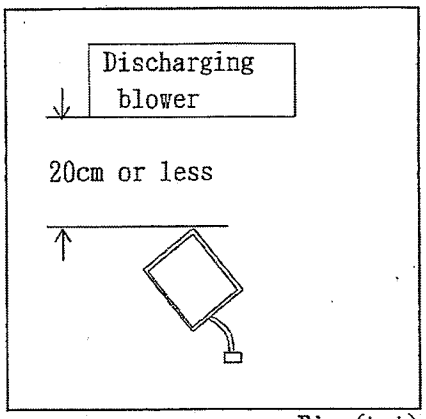

Fig. (ⅳ-i)

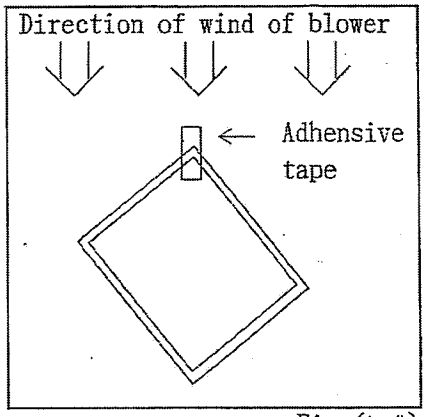

Fig. (ⅳ-ii)

Fig. (ⅳ)

e) Method of removing dust from polarizer
- Blow off dust with N_2 blower for which static electricity preventive measure has been taken. Ionized air gun (Hugle Electronics Co.) is recommended.
- Since polarizer is vulnerable, wiping should be avoided. But when the panel has stain or grease, we recommend to use adhesive tape to remove them softly from the panel.

③ When metal part of the TFT-LCD module (shielding lid and rear case) is soiled, wipe it with soft dry cloth. For stubborn dirtts, wipe the part, breathing on it.
④ Wipe off water drop or finger grease immediately. Long contact with water may cause discoloration or spots.
⑤ TFT-LCD module uses glass which breaks or cracks easily if dropped or bumped on hard surface. Handle with care.
⑥ Since CMOS LSI is used in this module, take care of static electricity and earth your body when handling.

12-3) Precautions in adjusting module

Variable resistor on the rear face of the module have been adjusted optimally before shipment. Therefore, do not change any adjusted values. If adjusted values are changed, the specifications described here may not be satisfied.

12-4) Caution of product design

① The LCD module shall be protected against water salt-water by the waterproof cover.

② Please take measures to interferential radiation from module, to do not interfere surrounding appliances.

12-5) Others

① Do not expose the module to direct sunlight or intensive ultraviolet rays for many hours; LCD Module is deteriorated by ultraviolet rays.

② Store the module at a temperature near the room temperature. At lower than the rated storage temperature, liquid crystal solidifies, causing the panel to be damaged. At higher than the rated storage temperature, liquid crystal turns into isotropic liquid and may not recover.

③ If LCD panel breaks, there may be a possibility that the liquid crystal escapes from the panel. Since the liquid crystal is injurious, do not put it into the eyes or mouth. When liquid crystal sticks to hands, feet or clothes, wash it out immediately with soap.

④ Observe all other precautionary requirements in handling general electronic components.

(13) Shipping requirements

13-1) Packing form is shown in Fig. 8.

13-2) Carton storage condition

① Number of layers of cartons in pile : 10 layers max.

② Environmental condition :

・Temperature	0℃ to 40℃
・Humidity	60 %RH or less (at 40℃) No dew condition even at a low temperature and high humidity
・Atmosphere	Harmful gases such as acid and alkali which corrode electronic components and wires must not be detected.
・Storage period	About 3 months
・Opening of package	To prevent TFT-LCD module from being damaged by static electricity, adjust the room humidity to 50 %RH or higher and provide an appropriate measure for electrostatic earthing before opening the package.

(14) Reliability test items

Reliability test items for the TFT-LCD module are shown in Table 9.

(15) Others

15-1) Indication of lot number

Attached location of label : See Fig. 3.

Indicated contents of the label

LQ5AW136	R	○○○○○○○○
Model number	Lot number	

1	place : Produced year	(ex. 1998 ⇨ 8)
2	place : Produced month	(1,2,3,·····,9,X,Y,Z)
3～7	place : Serial number	(00001～)
8	place : Revisional sign	(A,B,C,····)

Reliability test Items for TFT-LCD Module

Table 9

No	Test items	Test conditions
1	High temperature storage test	Tp=+85℃ 240h
2	Low temperature storage test	Tp=−30℃ 240h
3	High temperature and high humidity operating test	Tp=+60℃· 90～95%RH 240h
4	High temperature operating test	Tp=+85℃ 240h
5	Low temperature operating test	Tp=−30℃ 240h
6	Electrostatic discharge test	±200V·200pF(0Ω), Once for each terminal.
7	Shock test	980m/s² · 6ms, ±X, ±Y, ±Z 3 times for each direction (JIS C0041, A-7 Condition C)
8	Vibration test	Frequency range : 8～33.3Hz Stroke : 1.3mm Sweep : 33.3Hz～400Hz Acceleration :28.4m/s² Frequency :15min 2 hours for each direction of X,Z 【Note 13-1】 4 hours for direction of Y (8 hours in total) (JIS D1601)
9	Heat shock test	−30℃～+85℃／200cycles (0.5h) (0.5h)

【Note】 Tp=Panel temperature

【Evaluation Result Criteria】

Under the display quality test conditions with normal operation state, there shall be no change which may affect practical display function.

【Note 13-1】 Direction of X,Y,Z is defined as follows.

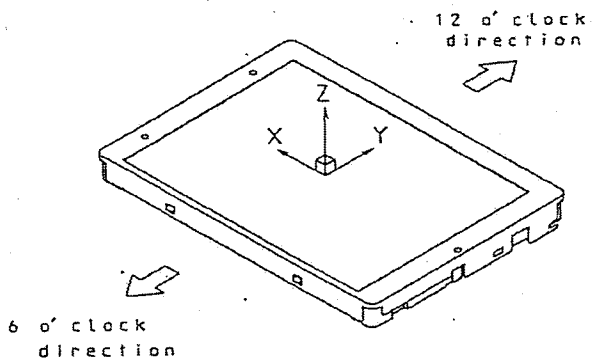

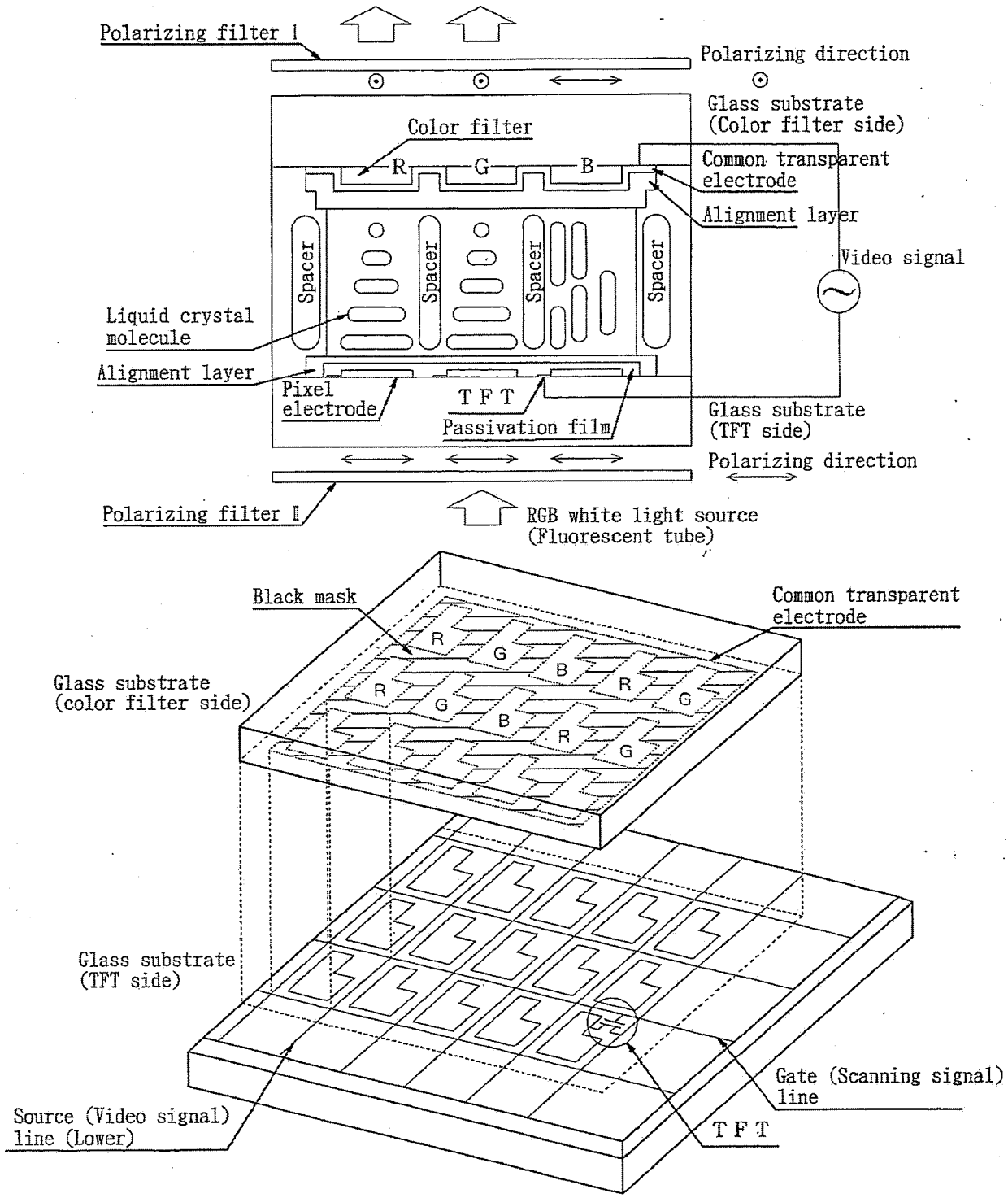

Fig 1. Illustration of TFT-LCD panel

Fig 1. Illustration of TFT-LCD panel

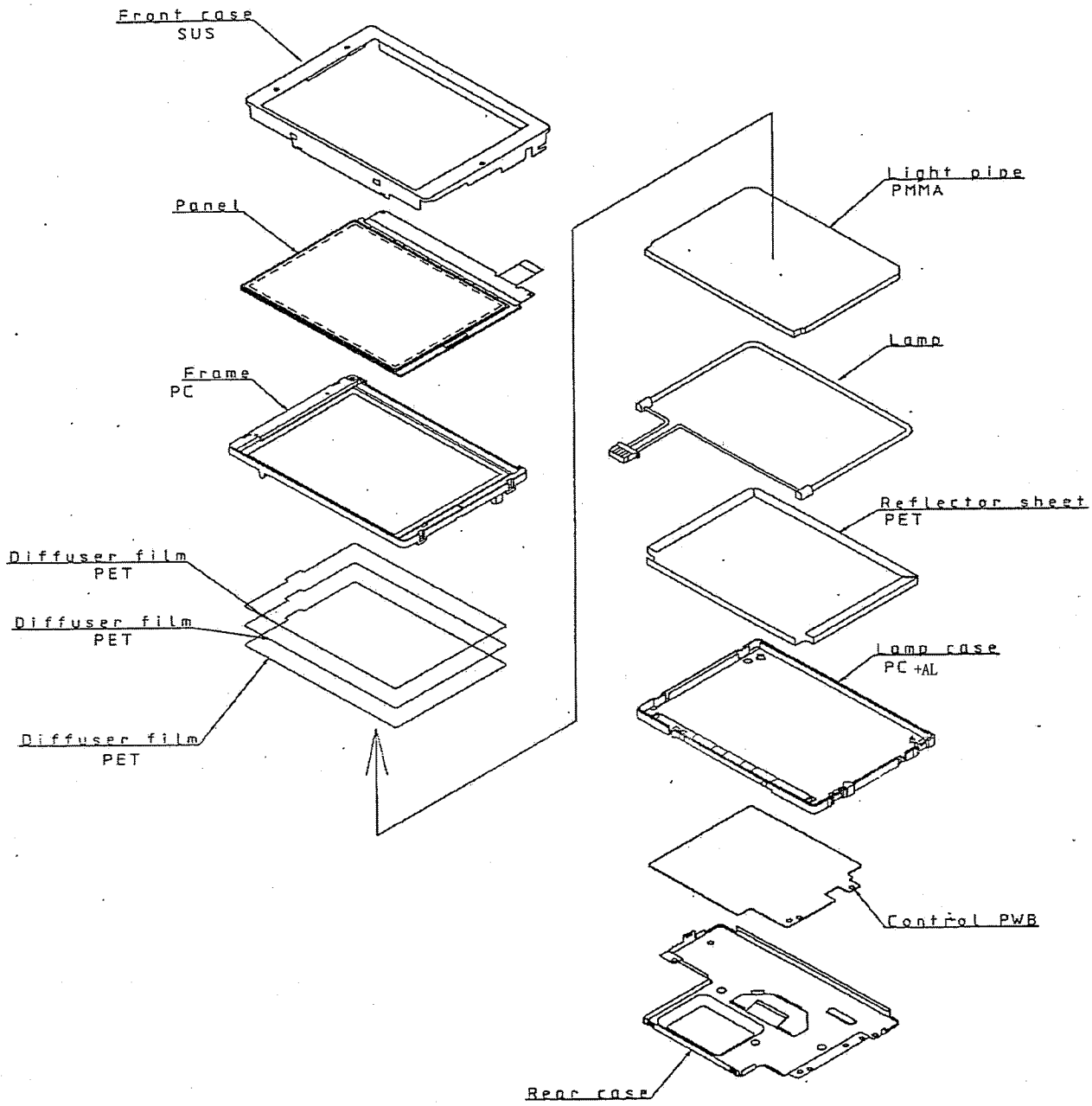

Fig.2 Construction of TFT-LCD module

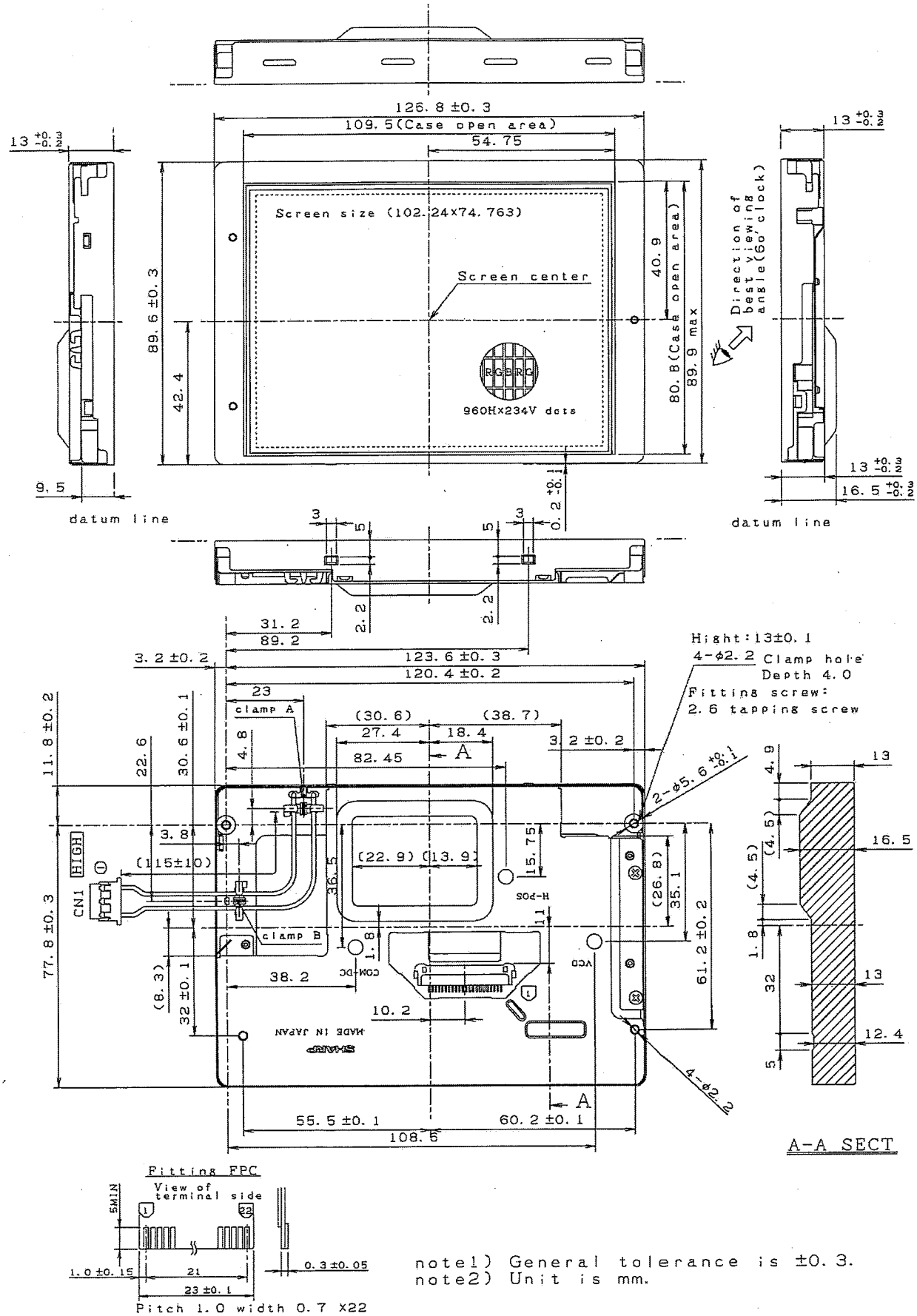

note1) General tolerance is ±0.3.
note2) Unit is mm.

Fig 3. Outline dimensions of TFT-LCD module

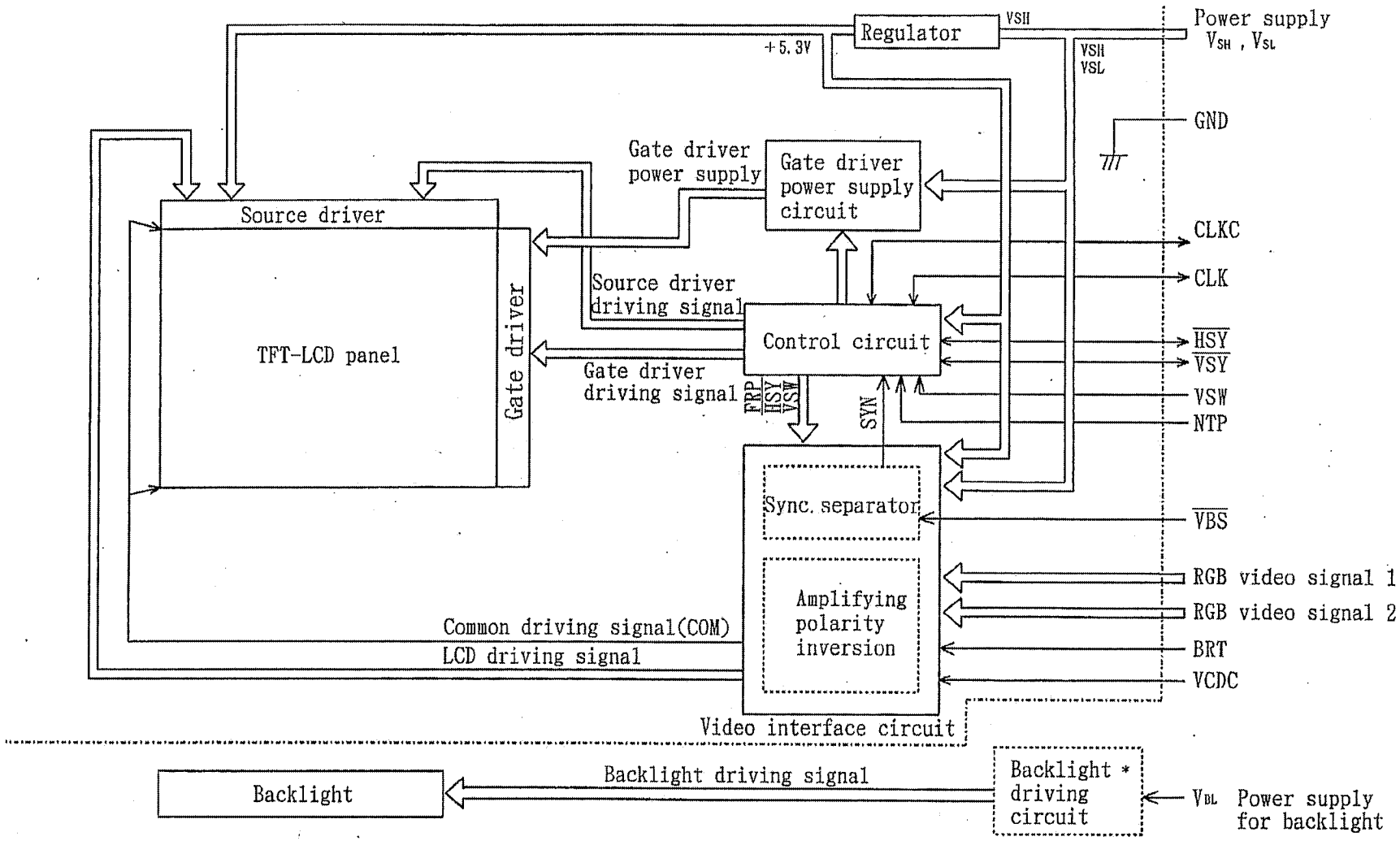

Fig. 4. Circuit block diagram of TFT-LCD module

Caution) *Not included in the module

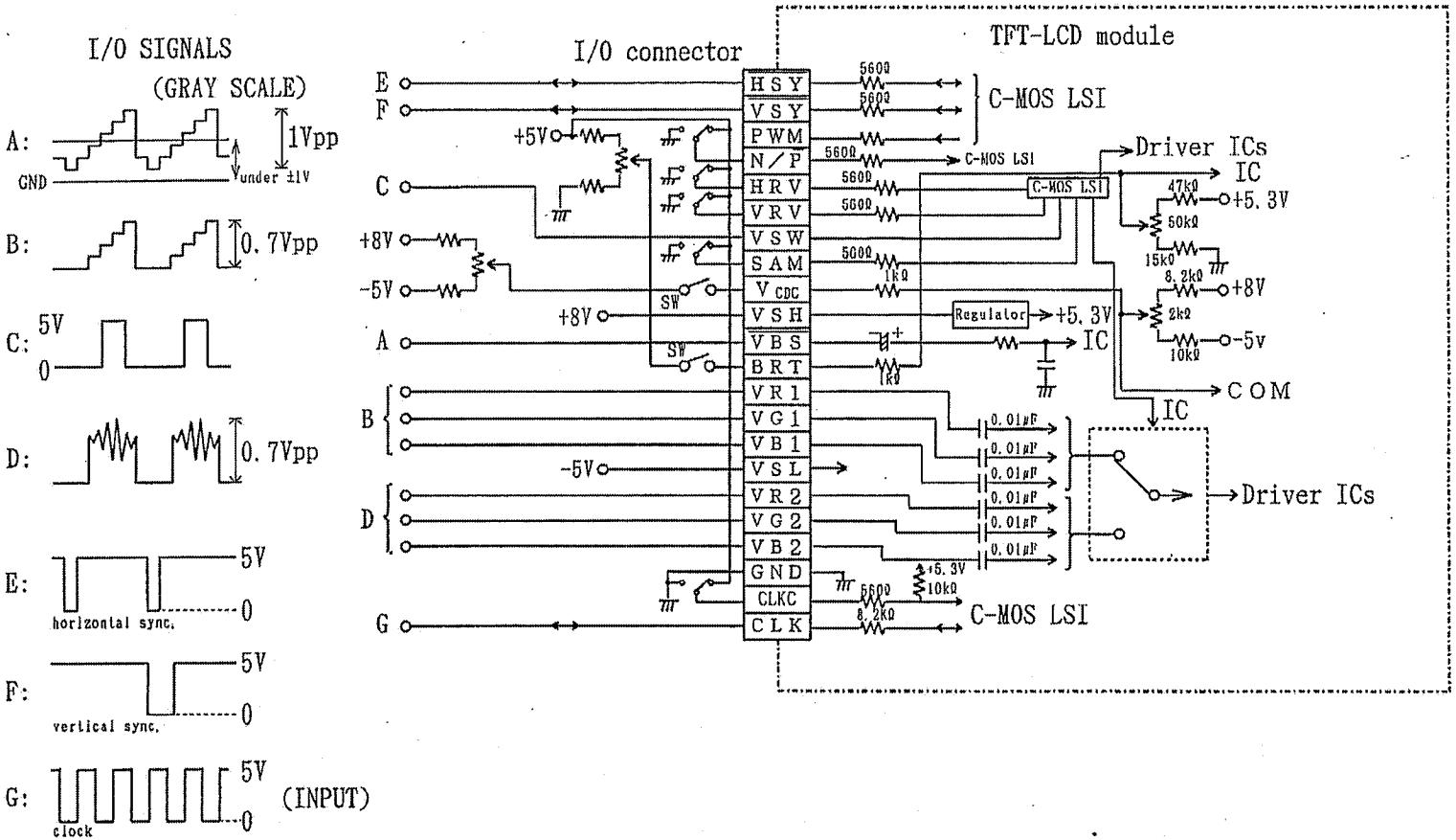

(Note)
input impedance of A, B, D: >10kΩ
input impedance of C: >50kΩ

Fig. 5 Recommended circuit to be referred

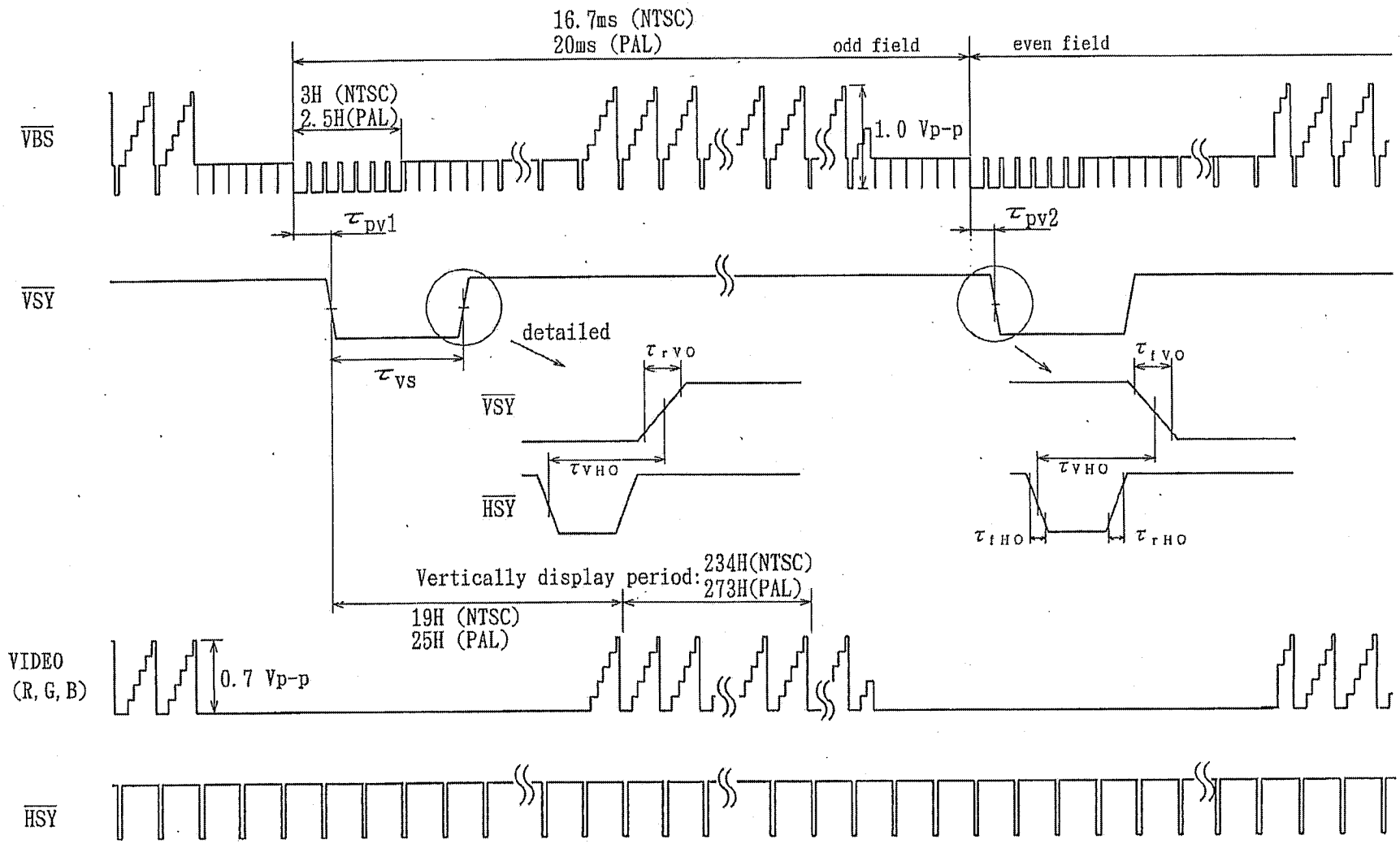

Fig. 6-A Input/Output signal waveforms(CLKC='Hi')

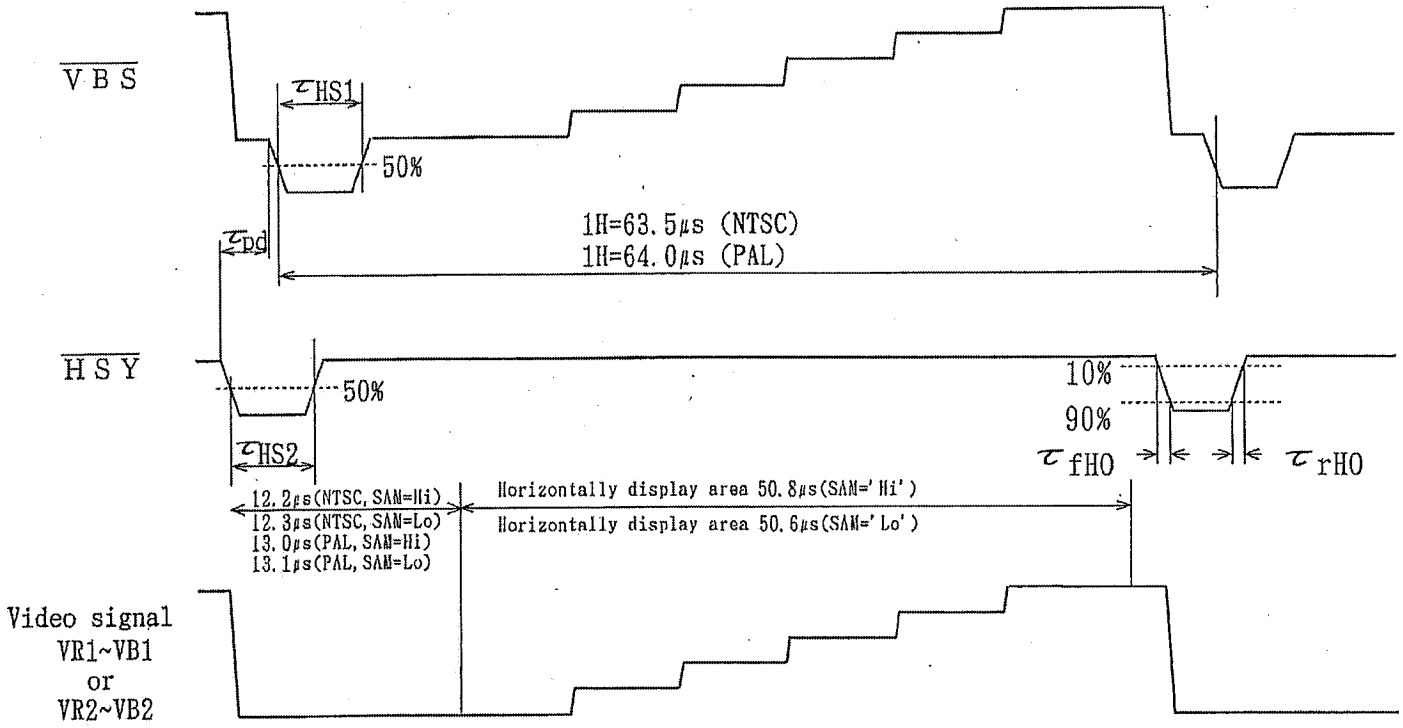

Fig. 6-B Input/Output signal waveforms (CLKC='Hi')

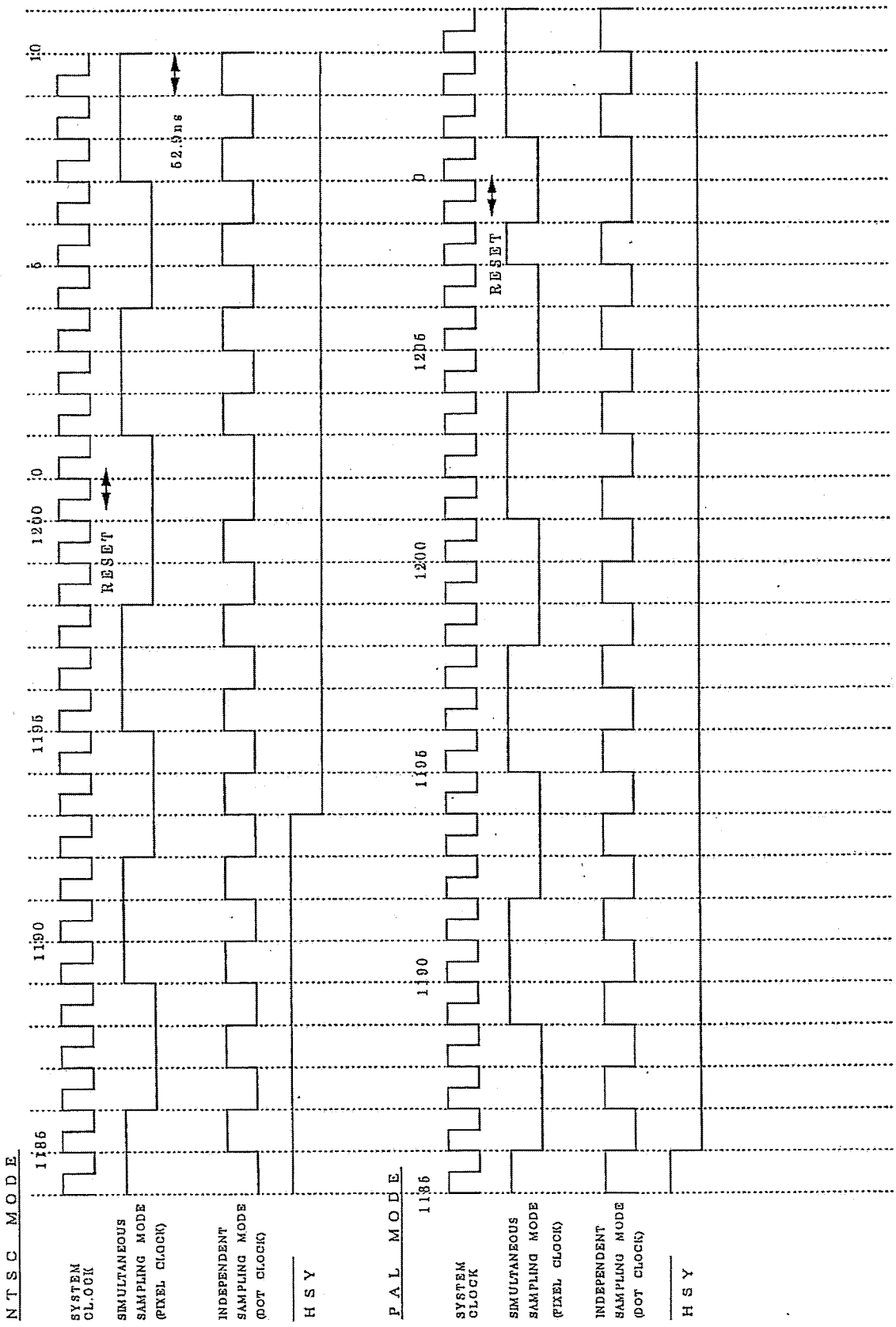

Fig.6-C. Input/Output signal waveforms (CLKC="Hi")

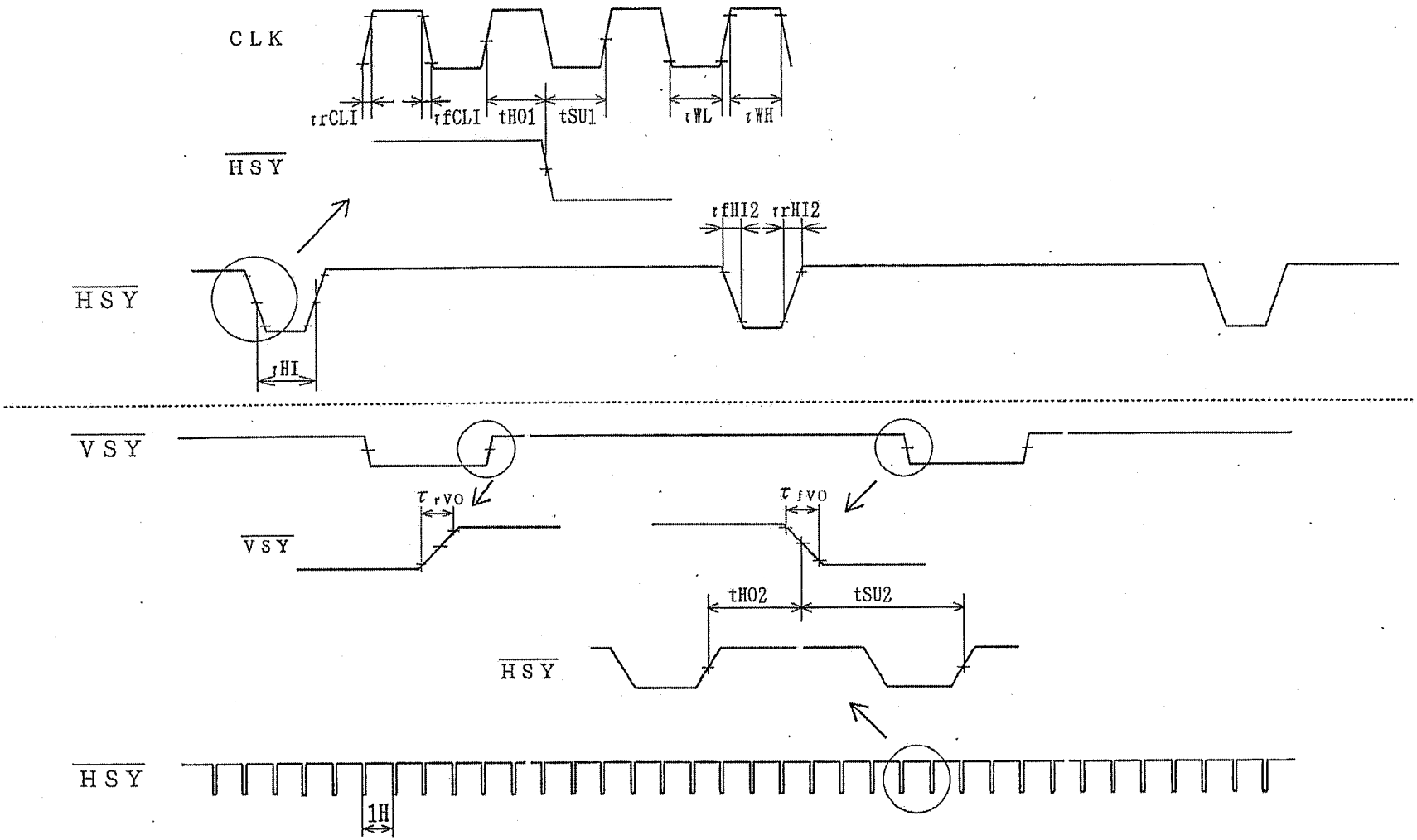

Fig. 6-D Input/Output signal waveforms(external clock mode NTP='Hi', CLKC='Lo')

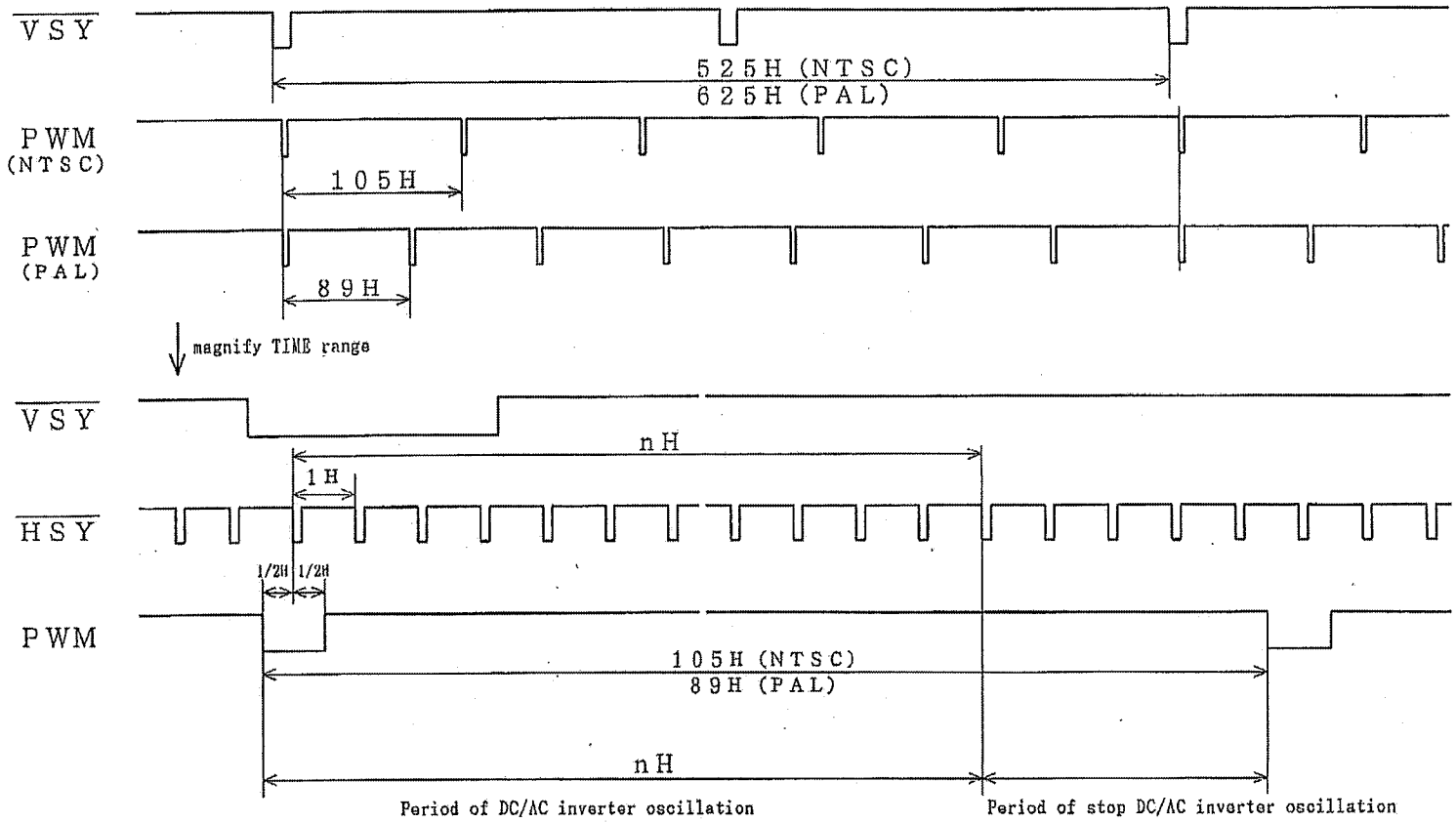

Fig. 7 PWM signal waveform for dimming backlight

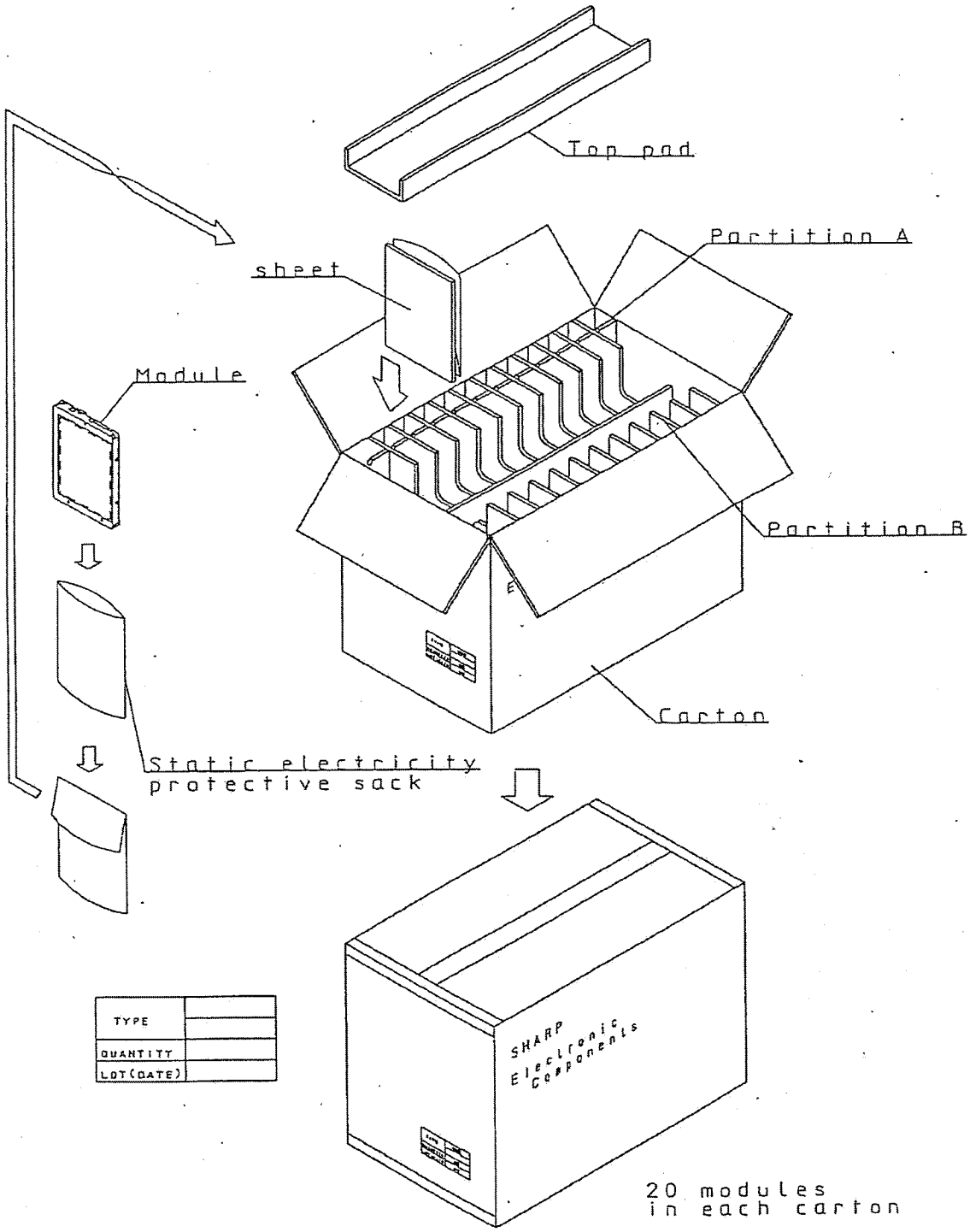

Fig.8. Packing form

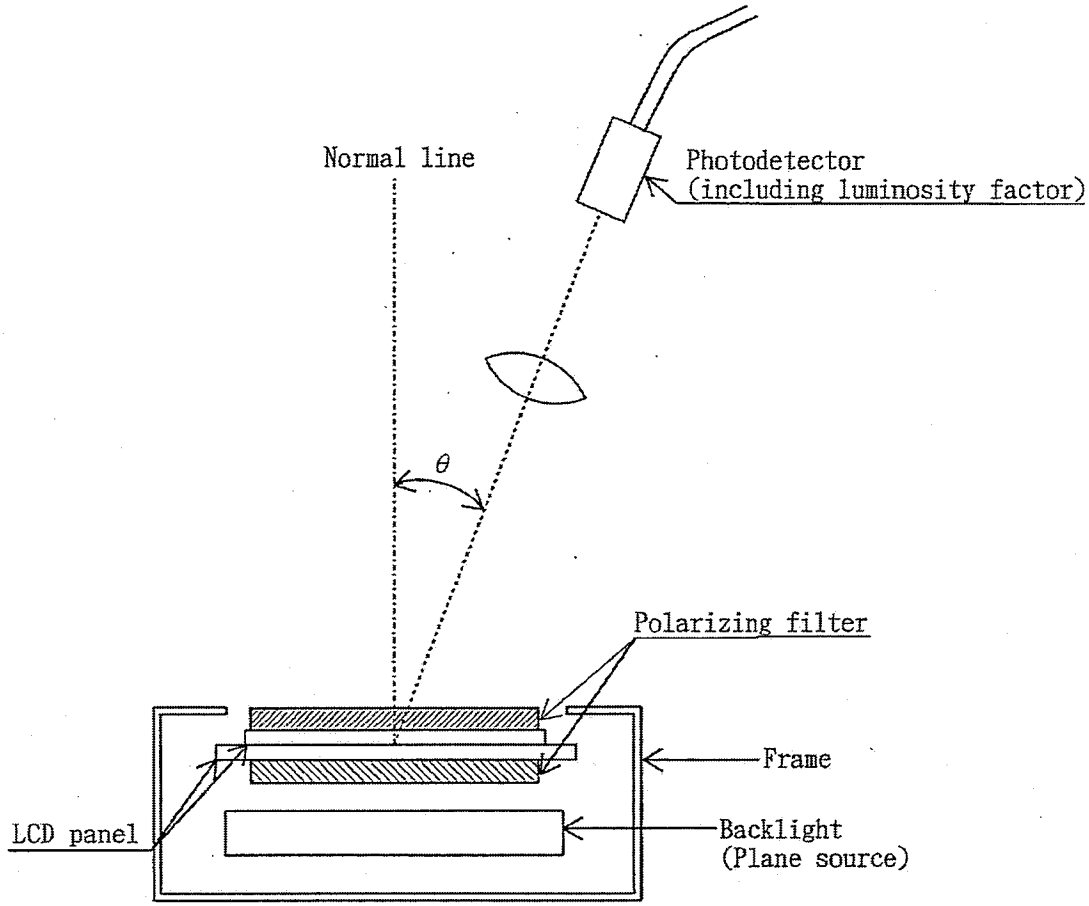

Brightness : Less than 5000cd/m^2

Wave length: To be cut less than 400nm

Fig. 9. Optical characteristics

(Appendix-1) Adjusting method of optimum common electrode DC bias voltage

To obtain optimum DC bias voltage of common electrode driving signal(V_{CDC}), photo-electric devices are very effective, and the accuracy is within 0. 1V.
(In visual examination method, the accuracy is about 0.5V because of the difference among individuals.)
To gain optimum common electrode DC bias voltage, there is the following method which use photo-electric device.

<Measurement of flicker>
DC bias voltage is adjusted so as to minimize NTSC:60Hz(30Hz) PAL:50Hz(25Hz) flicker.

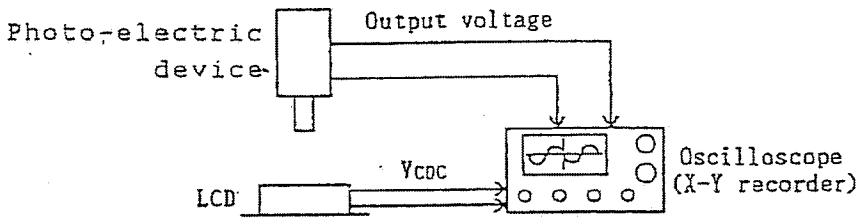

Fig. A Measurement system

Photo-electric output voltage is measured by an oscilloscope at a system shown in Fig. A.
DC bias voltage must be adjusted so as to minimize the NTSC:60Hz(30Hz) PAL:50Hz(25Hz) Flicker with DC bias voltage changing slowly. (Fig, B)

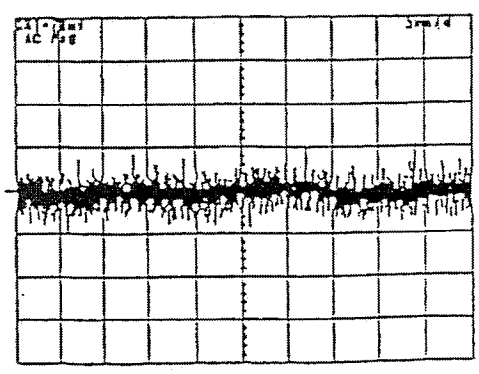

DC bias : Optimum

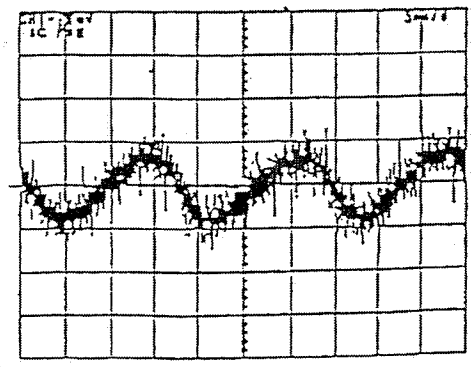

DC bias : Optimum+ 1V

Fig. B Waveforms of flicker

(Appendix-2) Electrical display rotating function

This module LQ5AW136R has a following optical characteristics.
And the optimum viewing angle is 6 o'clock direction.

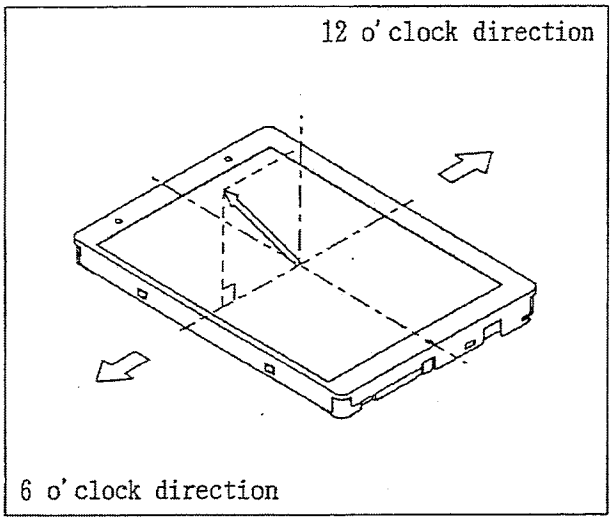

Direction of arrow : optimum viewing angle
Fig. C. 6 o'clock viewing angle panel

Basically this TFT-LCD module LQ5AW136R has the 6 o'clock viewing angle panel as above.
However, it is also possible to use as 12 o'clock viewing angle type by using
"Electrical display rotating function" as follows; (in this case, it is necessary to rotate the module 180℃ mechanically.)

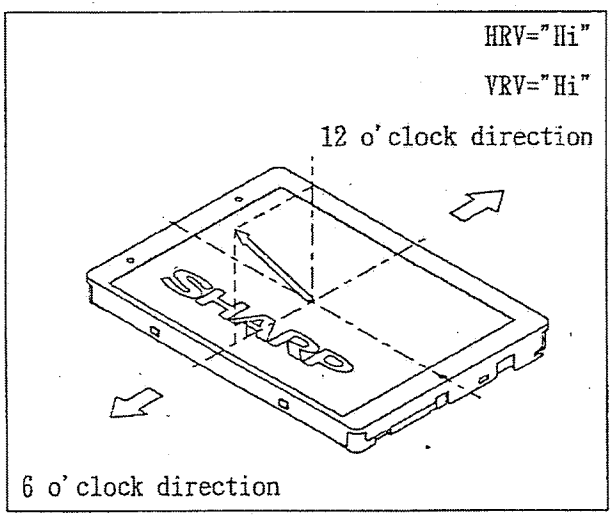

Direction of arrow : optimum viewing angle
Fig. D. 6 o'clock direction type

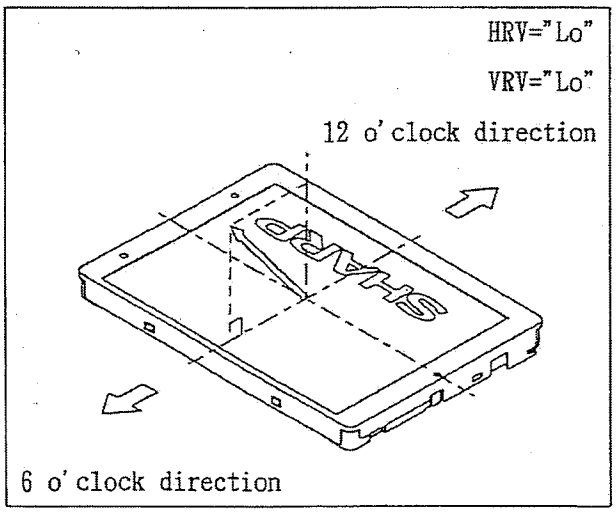

Direction of arrow : optimum viewing angle
Fig. E. 12 o'clock direction type

SPECIFICATIONS ARE SUBJECT TO CHANGE WITHOUT NOTICE.

Suggested applications (if any) are for standard use; See Important Restrictions for limitations on special applications. See Limited Warranty for SHARP's product warranty. The Limited Warranty is in lieu, and exclusive of, all other warranties, express or implied. ALL EXPRESS AND IMPLIED WARRANTIES, INCLUDING THE WARRANTIES OF MERCHANTABILITY, FITNESS FOR USE AND FITNESS FOR A PARTICULAR PURPOSE, ARE SPECIFICALLY EXCLUDED. In no event will SHARP be liable, or in any way responsible, for any incidental or consequential economic or property damage.

SHARP®

NORTH AMERICA

SHARP Microelectronics of the Americas
5700 NW Pacific Rim Blvd.
Camas, WA 98607, U.S.A.
Phone: (1) 360-834-2500
Fax: (1) 360-834-8903
Fast Info: (1) 800-833-9437
www.sharpsma.com

EUROPE

SHARP Microelectronics Europe
Division of Sharp Electronics (Europe) GmbH
Sonninstrasse 3
20097 Hamburg, Germany
Phone: (49) 40-2376-2286
Fax: (49) 40-2376-2232
www.sharpsme.com

JAPAN

SHARP Corporation
Electronic Components & Devices
22-22 Nagaike-cho, Abeno-Ku
Osaka 545-8522, Japan
Phone: (81) 6-6621-1221
Fax: (81) 6117-725300/6117-725301
www.sharp-world.com

TAIWAN

SHARP Electronic Components
(Taiwan) Corporation
8F-A, No. 16, Sec. 4, Nanking E. Rd.
Taipei, Taiwan, Republic of China
Phone: (886) 2-2577-7341
Fax: (886) 2-2577-7326/2-2577-7328

SINGAPORE

SHARP Electronics (Singapore) PTE., Ltd.
438A, Alexandra Road, #05-01/02
Alexandra Technopark,
Singapore 119967
Phone: (65) 271-3566
Fax: (65) 271-3855

KOREA

SHARP Electronic Components
(Korea) Corporation
RM 501 Geosung B/D, 541
Dohwa-dong, Mapo-ku
Seoul 121-701, Korea
Phone: (82) 2-711-5813 ~ 8
Fax: (82) 2-711-5819

CHINA

SHARP Microelectronics of China
(Shanghai) Co., Ltd.
28 Xin Jin Qiao Road King Tower 16F
Pudong Shanghai, 201206 P.R. China
Phone: (86) 21-5854-7710/21-5834-6056
Fax: (86) 21-5854-4340/21-5834-6057
Head Office:
No. 360, Bashen Road,
Xin Development Bldg. 22
Waigaoqiao Free Trade Zone Shanghai
200131 P.R. China
Email: smc@china.global.sharp.co.jp

HONG KONG

SHARP-ROXY (Hong Kong) Ltd.
3rd Business Division,
17/F, Admiralty Centre, Tower 1
18 Harcourt Road, Hong Kong
Phone: (852) 28229311
Fax: (852) 28660779
www.sharp.com.hk
Shenzhen Representative Office:
Room 13B1, Tower C,
Electronics Science & Technology Building
Shen Nan Zhong Road
Shenzhen, P.R. China
Phone: (86) 755-3273731
Fax: (86) 755-3273735