	SHARP	FILE No. LD-26X06A
	DISPLAY DEVICE BUSINESS GROUP SHARP CORPORATION	ISSUE : 07-Oct-14 PAGE : 27pages
	SPECIFICATION	APPLICABLE GROUP DISPLAY DEVICE BUSINESS GROUP

REVISION : 14-Oct-14

DEVICE SPECIFICATION FOR

LCD Module

MODEL No.

LS013B7DH03

These parts are complied with the RoHS directive.

☐ CUSTOMER'S APPROVAL

BY _____

BY T.Ohnishi

DEPARTMENT GENERAL MANAGER
DEVELOPMENT DEPARTMENT Ⅲ
DISPLAY DEVICE UNIT Ⅲ
DISPLAY DEVICE BUSINESS DIVISION Ⅰ
SHARP CORPORATION

RECORDS OF REVISION

Model No. : LS013B7DH03

SPEC No.	DATE	REVISED No	PAGE	SUMMARY	NOTE
LCP-1112045	Sep, 6th 2012	–		First edition	
LD-26X06	Oct, 7th 2014	–		First edition (Because of the division in charge change)	
			23	Figure8-1: Correction of the tolerance Value	
				Figure8-1: Add Polarizer absorption angle and Image Inversion angle.	
				Figure8-1: Add detailed drawing of input terminal and terminal name table	
				Figure8-1:Add stiffener length	
LD-26X06A	Oct, 14th 2014	A	7	Table3: Correction of the Pixel array. (From "Square" to "Stripe Array")	
			23	Figure8-1: Add Viewing Area(V.A) dimension	

NOTICE

<<Precautions>>

○ These specification sheets are the proprietary product of SHARP CORPORATION ("SHARP") and include materials protected under copyright of SHARP. Do not reproduce or cause any third party to reproduce them in any form or by any means, electronic or mechanical, for any purpose, in whole or in part, without the express written permission of SHARP.

○ The application examples in these specification sheets are provided to explain the representative applications of the device and are not intended to guarantee any industrial property right or other rights or license you to use them. SHARP assumes no responsibility for any problems related to any industrial property right of a third party resulting from the use of the device.

○ SHARP reserves the right to make changes in the specifications, characteristics, data, materials, structures and other contents described herein at any time without notice in order to improve design or reliability. Contact SHARP in order to obtain the latest specification sheets before using any SHARP's device. Manufacturing locations are also subject to change without notice.

Observe the following points when in using any device in this publication. SHARP takes no responsibility for damage caused by improper use of the devices.

The devices in this publication are designed for use in general electronic equipment designs, such as:

- Personal computers
- Office automation
- Telecommunication equipment
- Test and measurement equipment
- Industrial control
- Audio visual and multimedia equipment
- Consumer electronics

The appropriate design measures should be taken to ensure reliability and safety when SHARP's devices are used for equipment such as:

- Transportation control and safety equipment(i.e.,aircraft,trains,automobiles,etc.)
- Traffic signals
- Gas leakage sensor breakers
- Alarm equipment
- Various safety devices etc.

○ SHARP's devices shall not be used for equipment that requires extremely high level of reliability, such as:

- Military and space applications
- Nuclear power control equipment
- Medical equipment for life support

○ SHARP assumes no responsibility for any damage resulting from the use of the device which does not comply with the instructions and the precautions specified in these specification sheets.

○ Contact and consult with a SHARP sales representative for any questions about this device.

[For handling and system design]

(1) Handle with care as glass is used in this LCD panel. Dropping or contact against hard object may cause cracks or chips.

(2) Be careful to handle this LCD panel in order to avoid injury yourself by panel`s edge as this panel is made of glass and might be a sharp edge.

(3) Do not scratch the surface of the polarizer as it is easily damaged.

(4) Water droplets on the polarizer must be wiped off immediately as they may cause color changes, or other defects if remained for a long time.

(5)Do not leave the LCD panel in direct sun or under ultraviolet ray.

(6) To clean LCD panel surface, wipe clean with absorbent cotton or soft cloth. If further cleaning is needed, use IPA (isopropyl alcohol) and wipe clean lightly on surface only. Do not use organic solvents as it may damage the LCD panel terminal area which uses organic material. Also, do not directly touch with finger. When the terminals cleaning are needed, those should be wiped by a soft cloth or a cotton swab without directly touching by hand.

(7) Do not expose gate driver, etc. on the panel (circuit area outside panel display area) to light as it may not operate properly. Design that shields gate driver, etc. from light is required when mounting the LCD module.

(8) To avoid circuit failure, do not touch panel terminal area.

(9) Support for the LCD panel should be carefully designed to avoid stress that exceeds specification on glass surface.

(10) When handling LCD module and assembling them into cabinets, be noted that storage in the environment of oxidization or deoxidization gas and the use of such materials as reagent, solvent, adhesive, resin, and etc. which generate these gasses, may cause corrosion and discoloration of LCD modules.

(11)To avoid picture uniformity failure, do not put a seal or an adhesive material on the panel surface.

(12) Do not use chloroprene rubber as it generates chlorine gas and affects reliability in LCD panel connective area.

(13) Protective film is attached to the surface of polarizer on LCD panel to prevent scratches or other damages. Remove this protective film before use. In addition, do not attach the protective film which is removed from LCD module again. When the LCD panel which has the reattached protective film is needed to storage for a long time, the polarizer might have a damage with picture quality failure.

(14) Panel is susceptible to mechanical stress and such stress may affect the display. Place the panel on flat surface to avoid stress caused by twist, bend, etc.

(15) When transporting LCD panels, secure them in LCD panel tray to avoid mechanical stress. The tray should be conductive to protect LCD panels from static charge.

Material used in set or epoxy resin (amine type hardening agent) from packaging, and silicon adhesive (dealcoholized or oxime) all release gas which may affect quality of polarizer. Do confirm compatibility with user materials.

(16) As this LCD module is composed electronic circuits, it is sensitive to electrostatic discharge of 200V or more. Handle with care using cautions for the followings:

- Operators

  Operators must wear anti-static wears to prevent electrostatic charge up to and discharge from human body.

- Equipment and containers

  Process equipment such as conveyer, soldering iron, working bench and containers may possibly generate electrostatic charge up and discharge. Equipment must be grounded through 100Mohms resistance. Use ion blower.

- Floor

  Floor plays an important role in leaking static electricity generated in human body or equipment. If the floor is made of insulated material (such as polymer or rubber material), such static electricity may charge. Proper measure should be taken to avoid static electricity charge (electrostatic earth: 100Mohms).There is a possibility that the static electricity is charged to them without leakage in case of insulating floor, so the electrostatic earth:$1\times10^{8}\Omega$ should be made.

- Humidity

  Humidity in work area relates to surface resistance of the persons or objects that generate electrostatics, and it can be manipulated to prevent electrostatic charge. Humidity of 40% or lower increases electrostatic earth resistance and promotes electrostatic charging. Therefore, the humidity in the work area should be kept above 40%. Specifically for film peeling process or processes that require human hands, humidity should be kept above 50% and use electricity removal blower.

- Transportation/Storage

  Containers and styroform used in transporation and storage may charge electrostatic (from friction and peeling) or electrostatic charge from human body, etc. may cause containers and styroform to have induced charge. Proper electrostatic measure should be taken for containers and storage material.

[For operating LCD module]

(1) Do not operate the LCD panel under outside of electrical specification. Otherwise LCD panel may be damaged.

(2) Do not use the LCD panel under outside of specified driving timing chart. Otherwise LCD panel may not have proper picture quality.

(3) A still image should be displayed less than two hours, if it is necessary to display still image longer than two hour, display image data must be refreshed in order to avoid sticking image on LCD panel.

(4) If LCD module takes a static electricity, as the display image which is written into pixel memory might not be displayed, Data update should be executed frequently.

(5) It is neither a breakdown nor a defective indication though very slight change in black level might be periodically seen in a black part on the black display image according to the source of light (angle of the luminance and the source of light).

[Precautions for Storage]

(1) After opening the package, do not leave the LCD panel in direct sun or under strong ultraviolet ray. Store in dark place.

(2) In temperature lower than specified rating, liquid crystal material will coagulate. In temperature higher than specified rating, it isotropically liquifies. In either condition, the liquid crystal may not recover its original condition. Store the LCD panel in at or around room temperature as much as possible.

Also, storing the LCD panel in high humidity will damage the polarizer. Store in normal room temperature as much as possible.

(3) Keeping Method

a. Don't keeping under the direct sunlight.

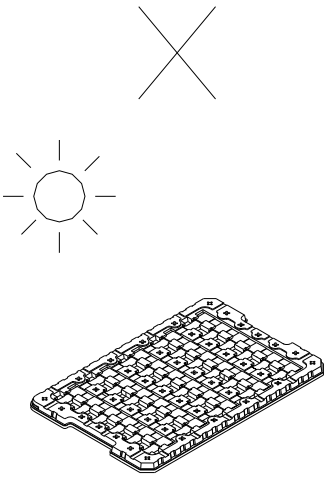

b. Keeping in the tray under the dark place.

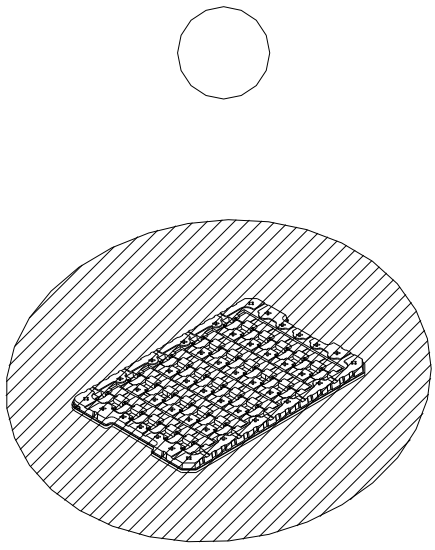

[Other Notice]

(1) Operation outside specified environmental conditions cannot be guaranteed.

(2) As power supply (VDD-GND、VDDA-GND) impedance is lowered during use, bus controller should be inserted near LCD module as much as possible.

(3) Polarizer is applied over LCD panel surface. Liquid crystal inside LCD panel deteriorates with ultraviolet ray. The panel should not be left in direct sun or under strong ultraviolet ray for prolonged period of time even with the polarizer.

(4) Disassembling the LCD module will cause permanent damage to the module. Do not disassemble the module.

(5) If LCD panel is broken, do not ingest the liquid crystal from the broken panel. If hand, leg, or clothes come in contact with liquid crystal, wash off immediately with soap.

(6) ODS (specific chlorofuorocarbon, specific halon, 1-1-1 trichloroethane, carbon tetrachloride) are not used or contained in material or all production processes of this product.

(7) Observe all other precautionary requirements in handling general electronic components.

Discarding liquid crystal modules

LCD Panel : Dispose of as glass waste. This LCD module contains no harmful substances.

The liquid crystal panel contains no dangerous or harmful substances.

This liquid crystal panel contains only an extremely small amount of liquid crystal (approximately 100mg) and therefore it will not leak even if the panel should break.

Its median lethal dose (LD50) is greater than 2,000 mg/kg and a mutagenetic (Aims test: negative) material is used.

Contents

1. Scope of application ····· 7
2. Overview ····· 7
3. Mechanical specification ····· 7
4. Input Terminal names and function ····· 8
5. Absolute Maximum Rating ····· 10
6. Electrical Characteristics ····· 11
7. Optical Characteristics ····· 21
8. Outline Dimension ····· 23
9. Example of external circuit ····· 24
10. Packaging ····· 25
11. Reliability test conditions ····· 27

1. Scope of application

Reflective active-matrix with slightly transmissive type memory liquid crystal display module with 128 x128 panel which uses CG silicon thin film transistor.

2. Overview

- 1.28 inch 128 x 128 monochrome HR-TFT transflective panel
- Transmissive mode is available by implemention with backlight. (Transmition ratio is around 0.2%)
- 128x 128 dot stripe arrangement
- Display control with serial data signal communication
- Arbitrary gate line is selectable to data update
- Internal 1bit memory within the panel for data memory
- Thin, light and compact module with monolithic technology
- Super low power consumption TFT panel
- With FPC (Applicable connector: Refer to recommended connector on page 23.)

3. Mechanical specification

Table 3 Module mechanical specification table

Item	Specification	Unit
Screen size（diagonal）	3.259［1.28”］	cm
Active display area	23.04(H) x 23.04(V)	mm
Dot structure	128（H） x 128（V）	dot
Dot pitch	0.18(H) x 0.18(V)	mm
Pixel array	Stripe Array	－
Module outline dimensions	26.6(W)×30.3(H)×0.741(D)	mm
Mass	1.2	g
Surface hardness	At least 3H (initial)	Pencil hardness

4. Input Terminal names and function

4-1) Input Terminal

Table 4

No.	Code	I/O	Voltage	Signal name	Remark
1	SCLK	I	0/3.0 (V)	Serial clock signal	
2	SI	I	0/3.0 (V)	Serial input signal	
3	SCS	I	0/3.0 (V)	Chip select signal	
4	EXTCOMIN	I	0/3.0 (V)	COM inversion polarity input pin	
5	DISP	I	0/3.0 (V)	Display ON/OFF switching signal	【Remark 4-2】
6	VDDA	I	3.0(V)	Power source for Analog	
7	VDD	I	3.0(V)	Power source for Logic	
8	EXTMODE	I	0/3.0 (V)	COM inversion mode switch terminal	【Remark 4-1】
9	VSS	I	0(V)	Logic ground	
10	VSSA	I	0(V)	Analogue ground	

【Remark 4-1】"H"=EXTCOMIN singal enabled, "L"=Serial input flag enabled.
When "H", connect EXTMODE to VDD and when "L" to VSS.

【Remark 4-2】ON/OFF for LCD display only. Memory data is maintained.
When "H", displays with memory data, and when "L", displays all white with memory data maintained.

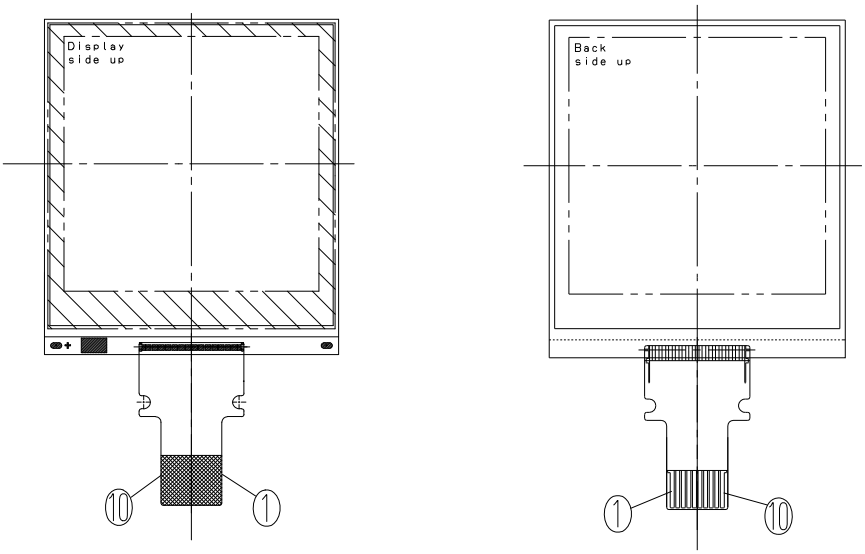

Figure 4-1 Terminals assaied number

Recommended Circuit

COM signal serial input
EXTMODE="L"

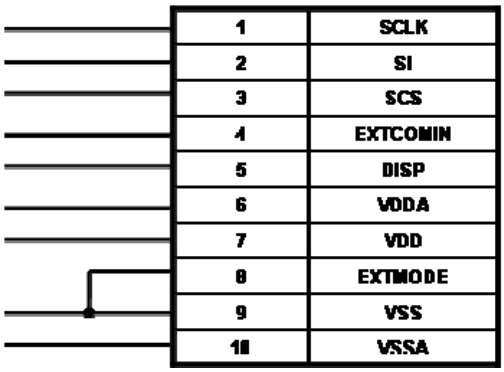

External COM signal input
EXTMODE="H"

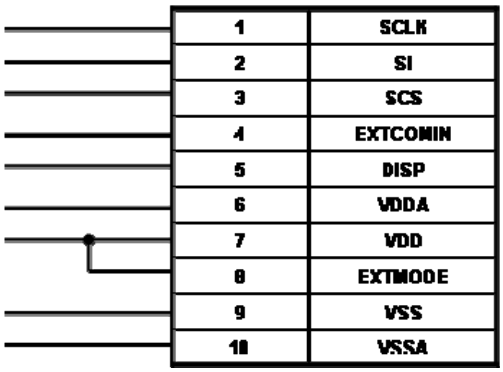

Figure 4-2 Recomended circuit

5. Absolute Maximum Rating

Table 5 （GND＝0V）

Item		Code	MIN.	MAX.	Unit	Remark
Power supply Voltage	Analog Power Supply	VDDA	-0.3	＋3.6	V	
	Logic Power Supply	VDD	-0.3	＋3.6	V	【Remark 5-1】
Input signal terminal voltage (high)				VDD	V	【Remark 5-2】
Input signal terminal voltage (low)			-0.3		V	
Storage temperature		Tstg	-30	＋80	℃	【Remark 5-3,4】
Operating temperature (Panel surface temperature)		Topr1	-20	＋70	℃	【Remark 5-5】

【Remark 5-1】Also applicable to EXTMODE.

【Remark 5-2】Applicable to SCLK, SI, SCS, DISP, EXTCOMIN.

【Remark 5-3】Do not exceed this rating in any area of the module.

【Remark 5-4】Maximum wet-bulb temperature should be 57℃ or lower. Do not allow condensation. Condensation may cause electrical leak and the module may not meet s specification.

【Remark 5-5】Operating temperature is temperature that guarantess operation only. For contrast, response speed, and other display quty, module is evaluated at Ta=+25℃.

6. Electrical Characteristics

6-1）TFT LCD Panel Driving Part

Table 6-1 Recommended Operating Condition VSS(GND)＝0V、Ta＝＋25℃

Item		Code	MIN.	TYP.	MAX.	Unit	Remark
Power supply voltage	Analog power Supply	VDDA	＋2.7	＋3.0	＋3.3	V	
	Logic power supply	VDD	＋2.7	＋3.0	＋3.3	V	【Remark 6-1】
Input singal voltage	Hi	VIH	VDD-0.1	－	VDD	V	【Remark 6-2】
	Lo	VIL	VSS	－	VSS+0.1	V	

【Remark 6-1】Also applicable to EXTMODE=”H”.

【Remark 6-2】Applies to SCLK, SI, SCS, DISP, EXTCOMIN.

6-2) Power supply sequence

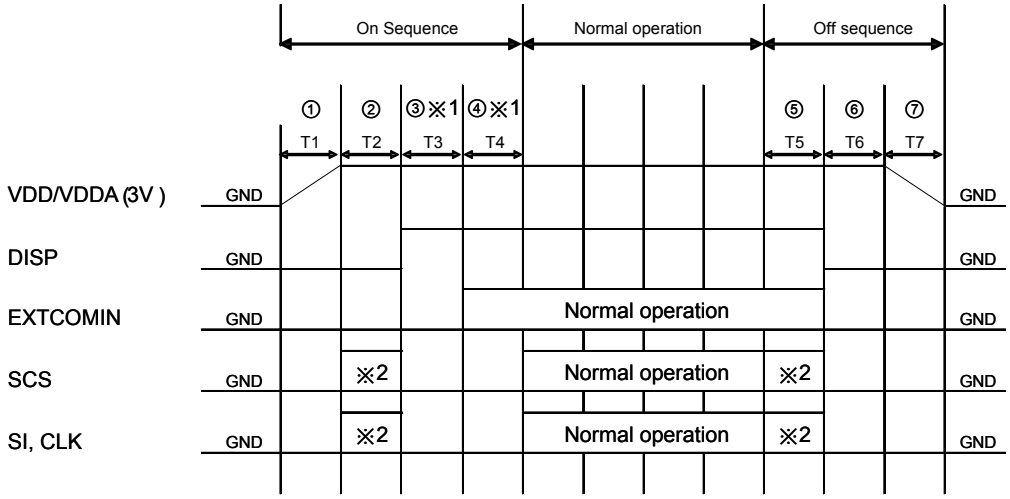

Figure 6-1 Power source sequence

※ Refer to timing chart and AC timing characteristics for detail

※ 1. (3) and (4) may be opposite (however, TCOM polarity inversion will not occur even with EXTCOMIN between DISP="L". Also, when DISP and EXTCOMIN are simultaneously started up, allow 30us or more before SCS starts up (It may be less than 60us).

※ 2. Setting value for pixel memory initialization

SCS=Driving accordingly to clear pixel internal memory method (use all clear flag or write all screen white)

S1=M2 (all clear flag) = "H" or write white

SCLK: Normal Driving

[ON Sequence]

(1) 3V rise time (depends on IC)

(2) Pixel memory initialisation

Use M2 (all clear flag) to initialise (at least once).

tsSCS + SCLK: at least 16ck + thSCS (refer to All Clear timing chart) Or

Write whole screen white (at least 1 frame)

(3) Release time for initialisation of TCOM latch T3: 30us or more

Time required to release COM related latch circuit initialisation which is initializing using DISP signals

(4) TCOM polarity initialisation time T4: 30us or more

Time required initialising TCOM polarity accordingly to EXTCOMIN input

[Normal Operation]

Duration of normal driving

[Off Sequence]

(5) Pixel memory initialisation time Contents same as (2)

(6) VA, VB, VCOM initialisation time T6: 30us or more

(7) 3V falling time (Depends on IC)

6-3) Input Signal Basic characteristics

Table 6-3-1 （Ta=25℃, SCS, SCLK, SI, DISP, EXTCOMIN=3.0V, VDD=3.0V, VSS pin=0V）

Pin name	Item	Code	Min	Typ.	Max	Unit	Notes
SCS	Frame frequency	fSCS	54		65	Hz	(*1)
SCLK	Clock frequency	fSCLK	-	1	1.1	MHz	
-	Vertical period	tV	15.38		18.52	msec	
-	COM frequency	fCOM	27		32.5	Hz	

(*1) Please use a frame frequency in the range where there are no problems with the display quality.

Table 6-3-2 Input signals （Ta=25℃, SCS, SCLK, SI, DISP, EXTCOMIN=3.0V, VDD=3.0V, VSS pin=0V）

Pin name	Item	Code	Min	Typ.	Max	Unit	Notes
SCS	SCS rise time	trSCS			50	nsec	
	SCS fall time	tfSCS			50	nsec	
	SCS Highwidth	twSCSH	153.45			µsec	Data update mode
			22.55			µsec	Display mode
	SCS Low width	twSCSL	6			µsec	
	SCS set up time	tsSCS	6			µsec	
	SCS hold time	thSCS	2			µsec	
SI	SI rise time	frSI			50	nsec	
	SI rise time	trSI			50	nsec	
	SI set up time	tsSCS	227			nsec	
	SI hold time	thSI	525			nsec	
SCLK	SCLK rise time	trSCLK			50	nsec	
	SCLK fall time	tfSCLK			50	nsec	
	SCLK High width	twSCLKH	404.55	450		nsec	
	SCLK Low width	twSCLKL	404.55	450		nsec	
EXTCOMIN	EXTCOMIN frequency	fEXTCOMIN	54		65	Hz	(*1)
	EXTCOMIN rise time	trEXTCOMIN			50	nsec	
	EXTCOMIN fall time	tfEXTCOMIN			50	nsec	
	EXTCOMIN High width	twEXTCOMIN	2			µsec	
	EXTCOMIN set up time	tsEXTCOMIN	5			µsec	
	EXTCOMIN hold time	thEXTCOMIN	0			µsec	
DISP	DISP rise time	trDISP			50	nsec	
	DISP fall time	tfDISP			50	nsec	

(*1) Please make the EXTCOMIN frequency less than the frame rate frequency.

SCS, SI, SCLK signal

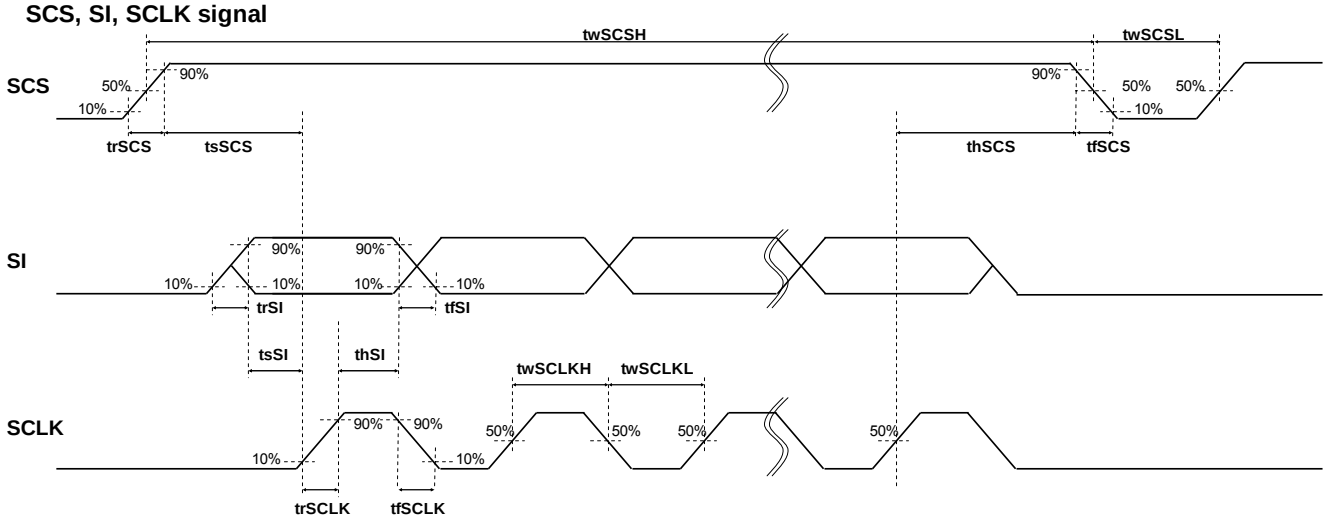

EXTCOMIN signal

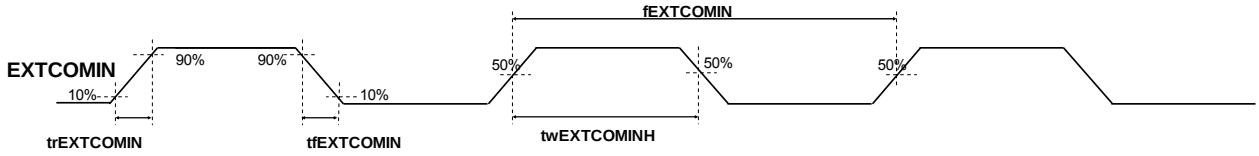

DISP signal

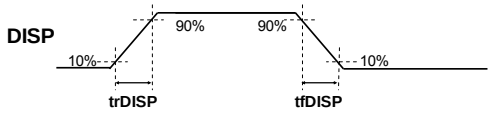

6-4) Power Consumption (Average)

Table 6-4 Ta＝25℃

Item	Min	TYP	MAX	Unite	Remark
Measurement Condition 1	-	12	50	uW	【Remark 6-4】
Measurement Condition 2	-	50	130	uW	【Remark 6-4】

*Measurement Condition 1

Display mode (no display data update), Display pattern: Vertical stripe display

*Measurement Condition 2

Data update mode (with display data update: 1Hz)

Common inversion with VDD=3V、VDDA=3V、fSCLK=1MHz、fSCS=1Hz, Display pattern: Vertical stripe display

【Remark 6-4】This is value in steady condition, not the falue of peak power at the time of COM operation. Some marging for power supply is recommended. We recommend capacitor for VDD and VDDA. (If VDD and VDDA are on separate systems, we recommend capacitor for each.)

6-5) Input Timing chart

6-5-1 Data update mode (1 line)

Updates data of only one specified line. (M0="H", M2＝"L")

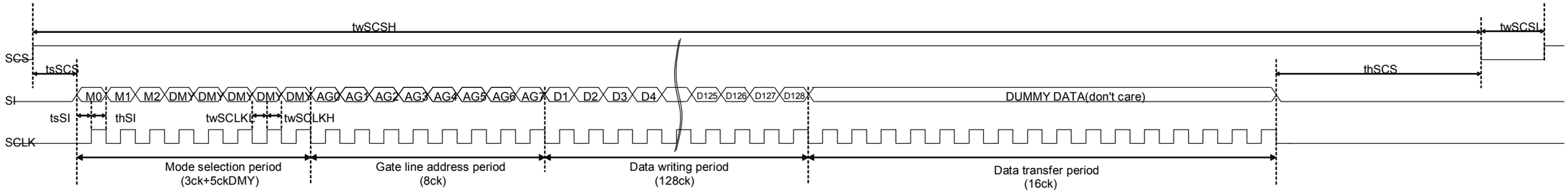

M0: Mode flag. Set for "H". Data update mode (Memory internal data update)
When "L", display mode (maintain memory internal data).
M1: It can be "H" or "L".
M2: All clear flag.
All Clear Mode set to "L". Refer to 'All clear timing chart'
D1-D128: Image data. "L" = black display. "H" = white display.
DUMMY DATA: Dummy data. It can be "H" or "L" ("L" is recommended.)

※ Data write period
Data is being stored in 1st latch block of binary driver on panel.
※ Data transfer period
Data written in 1st latch is being transferred (written) to pixel internal memory circuit.

]

Gate line address selection table <same as 6-6-2 Address Line Setup>

GL	AG0	AG1	AG2	AG3	AG4	AG5	AG6	AG7
1	1	0	0	0	0	0	0	0
2	0	1	0	0	0	0	0	0
3	1	1	0	0	0	0	0	0
4	0	0	1	0	0	0	0	0
5	1	0	1	0	0	0	0	0
6	0	1	1	0	0	0	0	0
7	1	1	1	0	0	0	0	0
8	0	0	0	1	0	0	0	0
:	:	:	:	:	:	:	:	:
121	1	0	0	1	1	1	1	0
122	0	1	0	1	1	1	1	0
123	1	1	0	1	1	1	1	0
124	0	0	1	1	1	1	1	0
125	1	0	1	1	1	1	1	0
126	0	1	1	1	1	1	1	0
127	1	1	1	1	1	1	1	0
128	0	0	0	0	0	0	0	1

6-5-2) Data Update Mode (Multiple Lines)

Updates arbitrary multiple lines data. (M0=”H”, M2＝”L”)

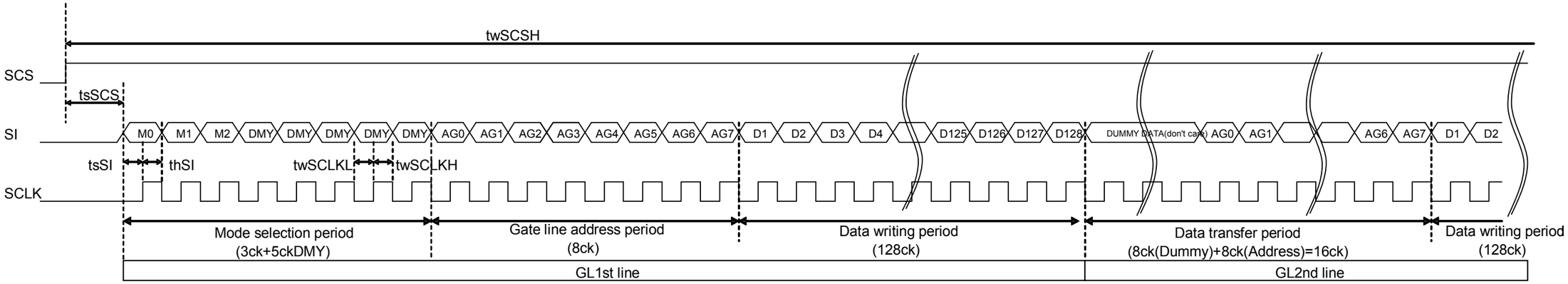

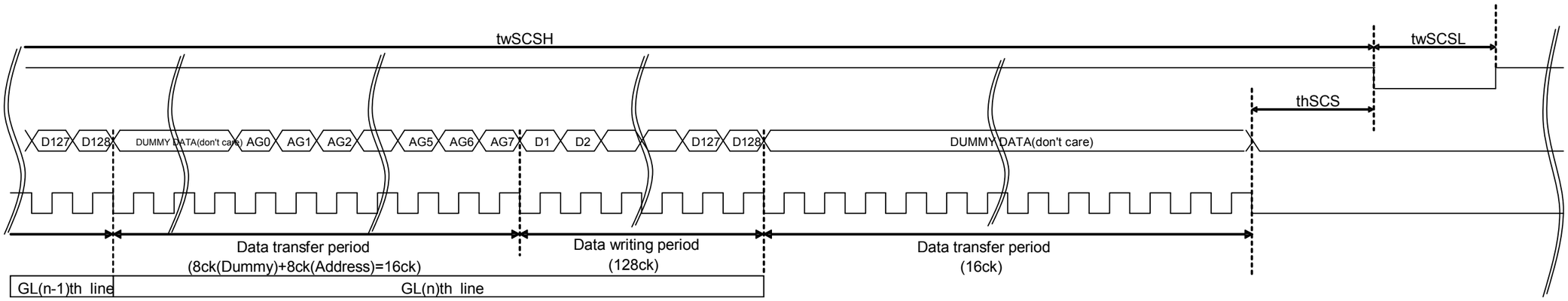

M0: Mode flag. Set for “H”. Data update mode (Memory internal data update)
When “L”, display mode (maintain memory internal data).
M1: It can be “H” or “L”.
M2: All clear flag.
All Clear Mode set to “L”. Refer to ‘All clear timing chart’
D1-D128: Image data. “L” = black display. “H” = white display.

※ Data write period
Data is being stored in 1st latch block of binary driver on panel.
※ Data transfer period
For example, during GL2 line data transfer period, GL 2nd line address is latched and GL 1st line data is transferred from 1st latch to pixel internal memory circuit at the same time.

6-5-3 Display Mode

Maintains memory internal data (maintains current display). (M0="L", M2＝"L")

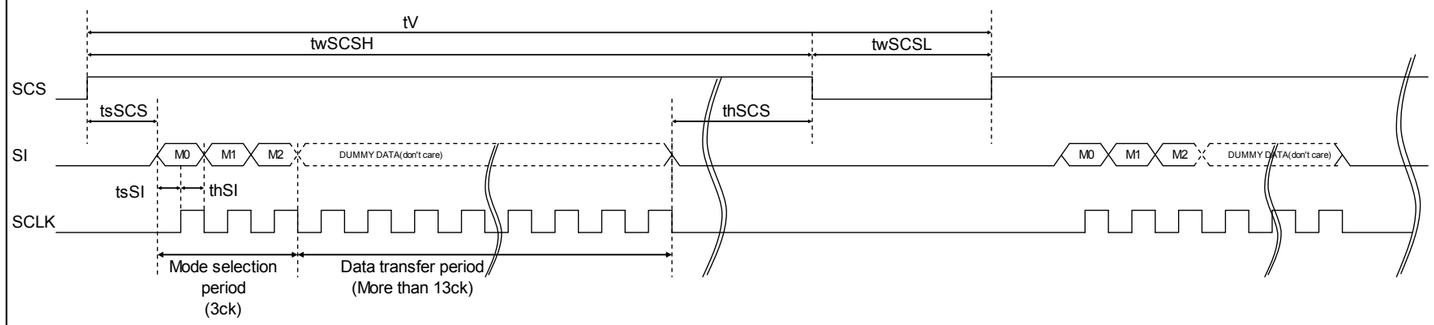

M0: Mode flag.
When "L", display mode (maintain memory internal data).
Set for "H". Data update mode (Memory internal data update)
M1: It can be "H" or "L".
M2: All clear flag.
All Clear Mode set to "L".Refer to 'All clear timing chart'
DUMMY DATA: Dummy data. It can be "H" or "L" ("L" is recommended.)

6-5-4 All Clear Mode

Clears memory internal data and writes white. (M0="L"、M2＝"H")

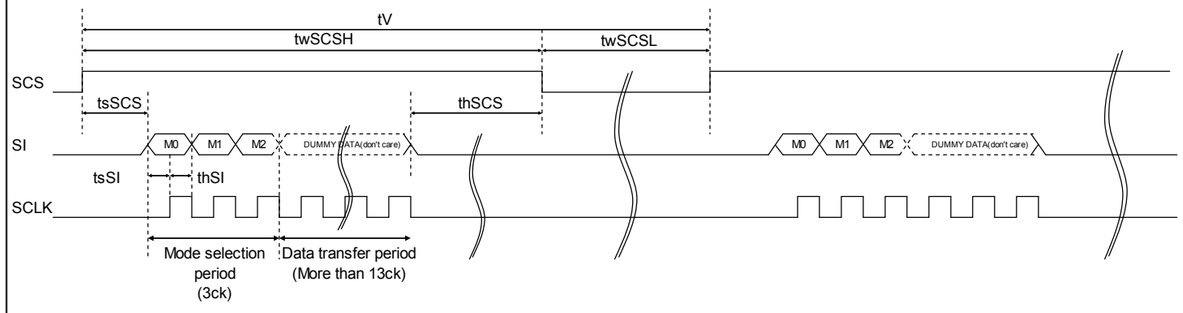

M0: Mode flag.
Set it "L".
M1: It can be "H" or "L".
M2: All clear flag.
Set it "H"
DUMMY DATA: Dummy data. It can be "H" or "L" ("L" is recommended.)

6-5-5 COM Inversion

EXTCOMIN has 2 timing conditions:

(1): The EXTCOMIN input during high period of the SCS signal

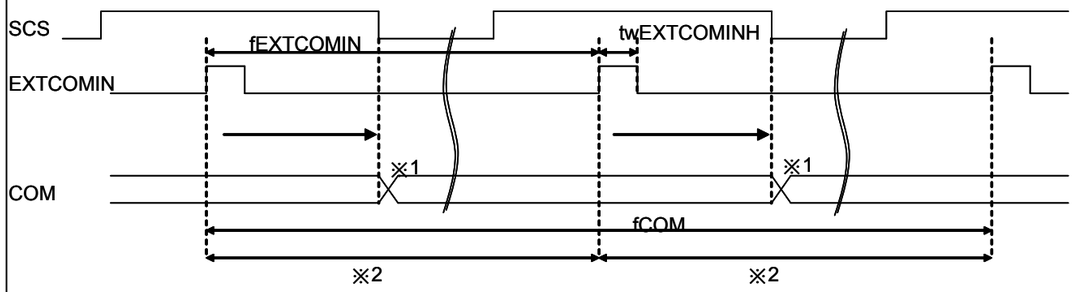

※ 1: LC inversion polarity has been set by the falling edge of SCS signal.

※ 2: The period of EXTCOMIN should be constant.

(2): the EXTCOMIN input during low period of the SCS signal

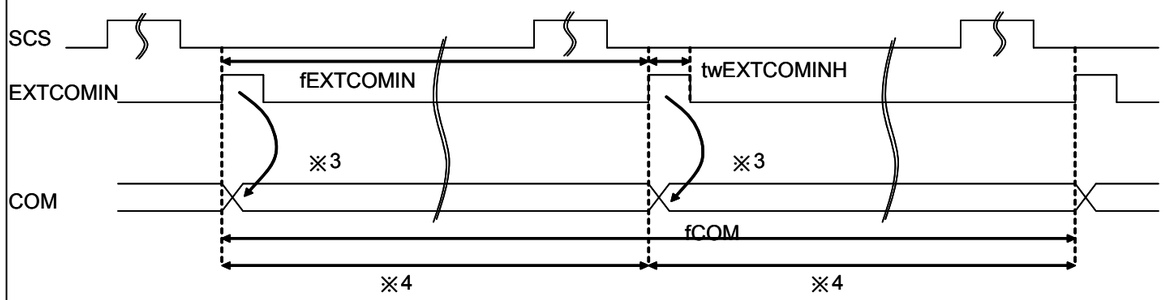

※ 3: LC inversion polarity has been set by the rising edge of EXTCOMIN.

※ 4: The period of EXTCOMIN should be constant.

6-6) Input Signal and Screen Display, Gate

6-6-1 Data screen display position〔H,V〕

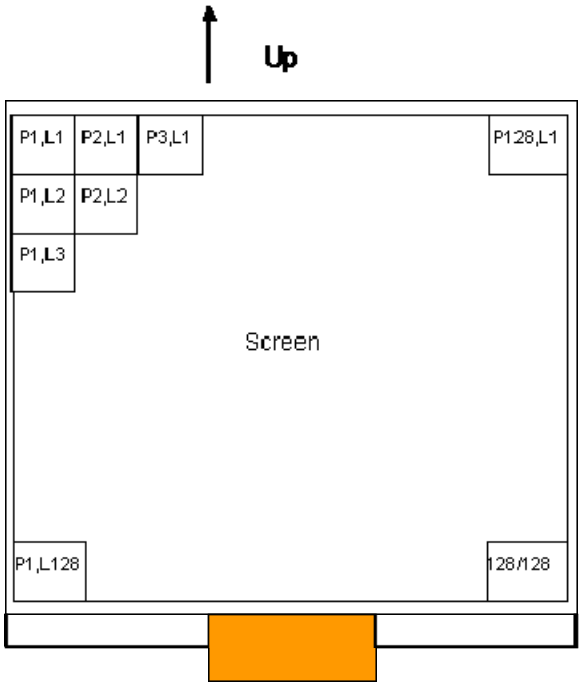

6-6-2 Address Line Setup

GL	AG0	AG1	AG2	AG3	AG4	AG5	AG6	AG7
1	1	0	0	0	0	0	0	0
2	0	1	0	0	0	0	0	0
3	1	1	0	0	0	0	0	0
4	0	0	1	0	0	0	0	0
5	1	0	1	0	0	0	0	0
6	0	1	1	0	0	0	0	0
7	1	1	1	0	0	0	0	0
8	0	0	0	1	0	0	0	0
:	:	:	:	:	:	:	:	:
121	1	0	0	1	1	1	1	0
122	0	1	0	1	1	1	1	0
123	1	1	0	1	1	1	1	0
124	0	0	1	1	1	1	1	0
125	1	0	1	1	1	1	1	0
126	0	1	1	1	1	1	1	0
127	1	1	1	1	1	1	1	0
128	0	0	0	0	0	0	0	1

7. Optical Characteristics

Table 7 Ta=25℃

Item		Code	MIN.	TYP.	MAX.	Unit	Remark
Viewing Angle CR≧2	H	θ21,θ22	40	60		°(Degree)	【Remark 7-1】
	V	θ11	40	60		°(Degree)	
		θ12	40	60		°(Degree)	
Contrast Ratio		CR.	14	18			【Remark 7-2、3】
Reflection Ratio		R	14	18		%	【Remark 7-3】
Transmissition Ratio		T		0.2		%	【Remark 7-5】
Response Speed	Rise	τ r		10	20	ms	【Remark 7-3,4】
	Fall	τ d		20	40	ms	
Panel Surface Chromaticity	White	x		0.31			【Remark 7-3】
		y		0.33			

【Remark 7-1】Definition of Viewing Angle

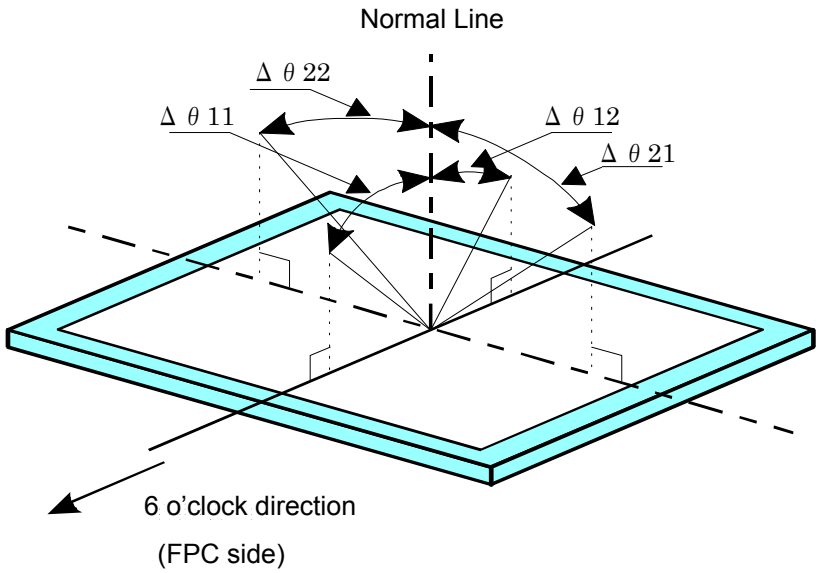

【Remark 7-2】 Definition of Contrast Ratio

Defined as shown in below formula

$$\text{Contrast Ratio (CR)} = \frac{\text{Reflection intensity of white display}}{\text{Reflection intensity of black display}}$$

【Remark 7-3】Optical Characteristics Measurement Equipment

Contrast ratio, reflective ratio and panel surface chromaticity are measured as shown in Figure 7-2, and Response speed is measured as shown in Figure 7-3. Both measurement methods are done in dark Room or equivalent.

Measurement Equipment (CM-2002)

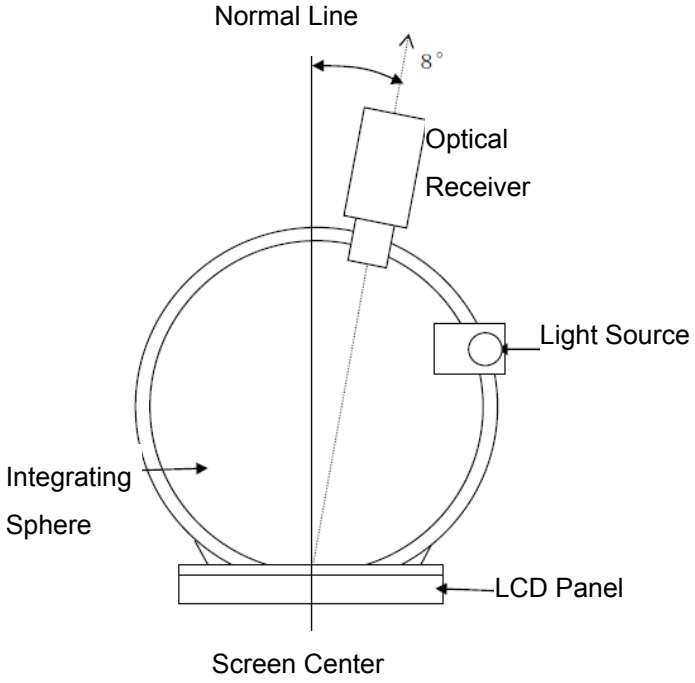

Measurement Equipment (LCD-5200)

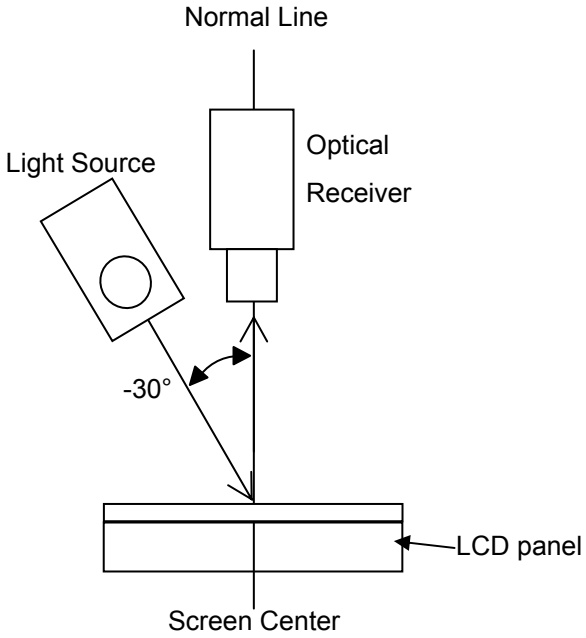

Figure 7-2 Measurement of contrast, reflective ratio and panel surface chromaticity

【Remark 7-4】Definition of Response Speed (Reflection Ratio Change)

Input signal for white and black as shown below and define by the change in time it takes for optical receiver output.

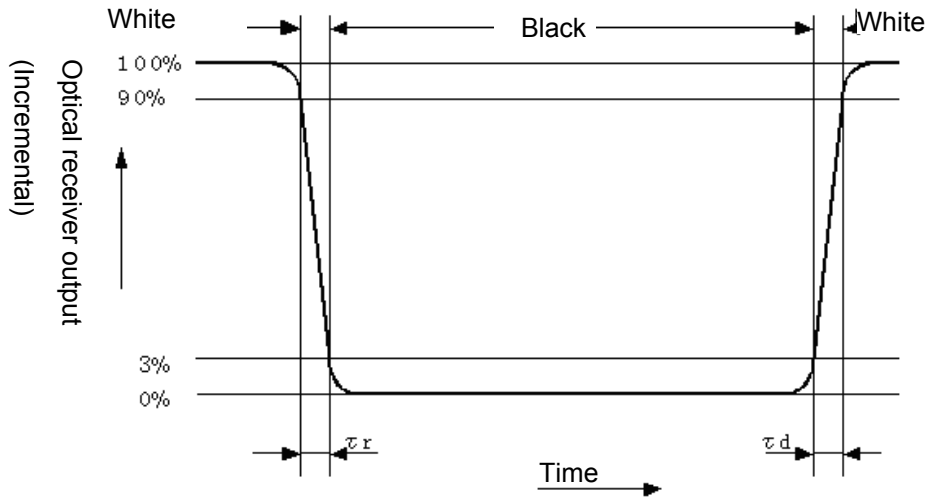

Figure 7-3 Measurement of response speed

【Remark 7-5】Panel luminance calculation.

Backlight can be implemented underneath the panel, display can be shown with the luminance which is depended on the Backlight luminance. The luminance can be calculated by “the panel transimisivity (0.2%)” multiply “Backlight luminance”.

8. Outline Dimension

Figure 8-1 1.28 inch 128x128 Monochrome Outline Dimension

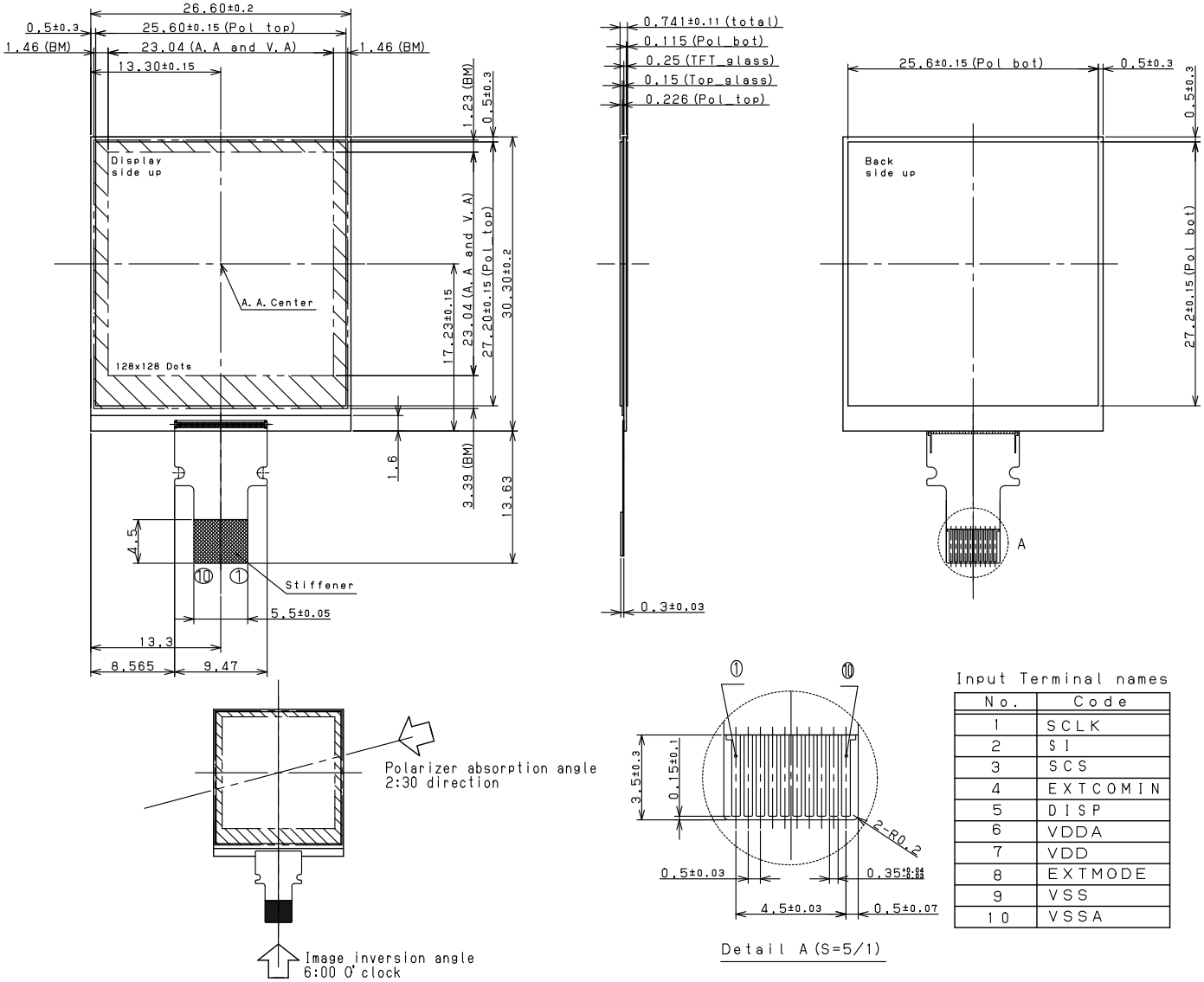

Input Terminal names

No.	Code
1	SCLK
2	SI
3	SCS
4	EXTCOMIN
5	DISP
6	VDDA
7	VDD
8	EXTMODE
9	VSS
10	VSSA

Figure 8-1 Module Outline

<Recommended Connector> Panasonic: AYF531035 (Contact: Bottom side)

SMK FP12 Series: CFP-4610-0150F(Contant:Bottom side)

Molex: 51441-1093(Contact:Bottom side)

8-2) FPC Bend Specification

When bending FPC, bend where specified in Condition (1) and the bend R should be more than R specified in Condition (2). FPC is not to contact glass edge, and there should be no stress to connective area between panel and FPC.

Condition (1) FPC bend recommended area: 0.8mm – 6.0mm from glass edge.

Condition (2) Minimum bend R: Inner diameter R0.45

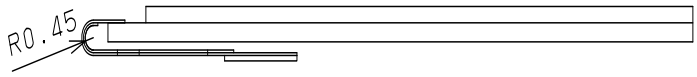

Figure 8-2

【Remark 8-1】 Do not bend backward (toward polarizer film side)

【Remark 8-2】Bend frequency: 3 times or less (Repeat bend condition: 180° ～ 0°)

<Recommended Connector> Panasonic: AYF531035 (Contact: Upper side)

SMK FP12 series : CFP-4510-0150F (Contact: Upper side)

9. Example of external circuit

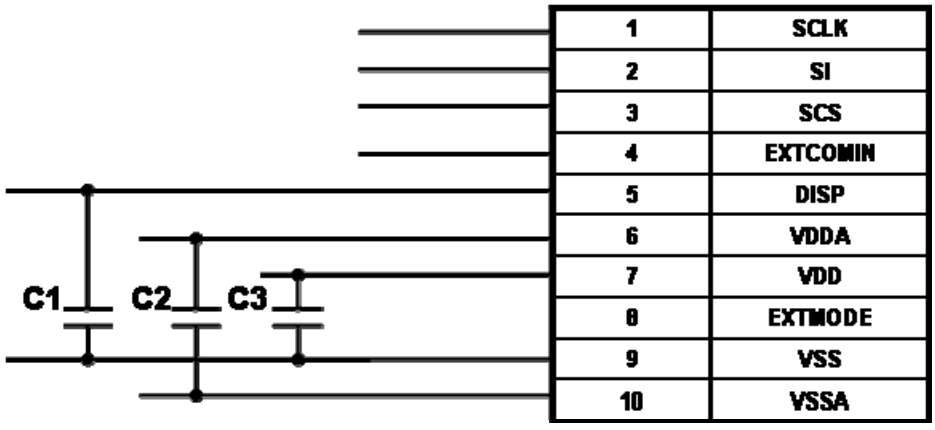

Figure 9-1 External circuit diagram (recommended)

＜Recommended Capacitor＞

C1: Between DISP-VSS, B characteristics 0.1uF ceramic capacitor

C2: Between VDDA-VSS, B characteristics 1uF or more cerac capacitor

C3: Between VDD-VSS, B characteristics 1uF or more ceramic capacitor

※ Above circuit and parts are only recommendation

For actual use, please evaluate their conformity with your system and design.

(Capacitor pressure resistance can be larger than resistance indicated above.)

10. Packaging

10-1 Lot number display

Displayed by printing. The display position is shown in Figure 10-1 outline dimension diagram.

Display contents

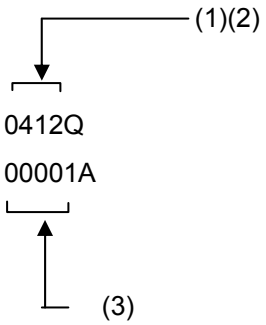

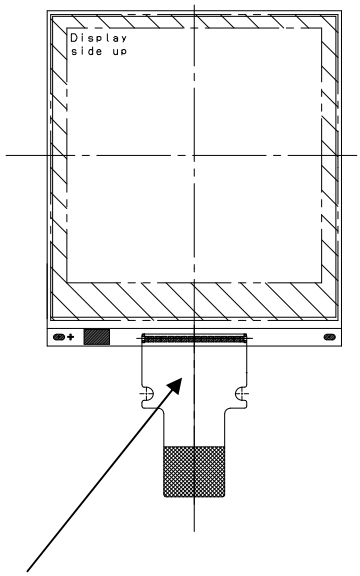

Serial number specification

(1)Last digit of the year

(2)Month and date of manufacture

(3)5 digit consecutive numbers

Figure 10-1 Lot number printing position

10-2 Carton storage conditions

(1) Max number stacked: 8

Max number stored: 2240pcs

(2) Environment

・Temperature 0～40˚C

・Humidity Less than 60% RH（at 40˚C）

There should be no condensation at low temperatures even with high humidity.

・Atmosphere No toxic gases that significantly corrode the electronic parts and wiring material such as acid and alkali should be detected.

・Period Around 3 months

・Unpacking In order to prevent electrostatic damage to TFT modules, room humidity should be made over 50% RH and take effective measure such as use of earth when opening the package.

10-3 Packing

The packing condition is shown in Figure 10-2.

The packaging is designed such that the module does not break during transit.

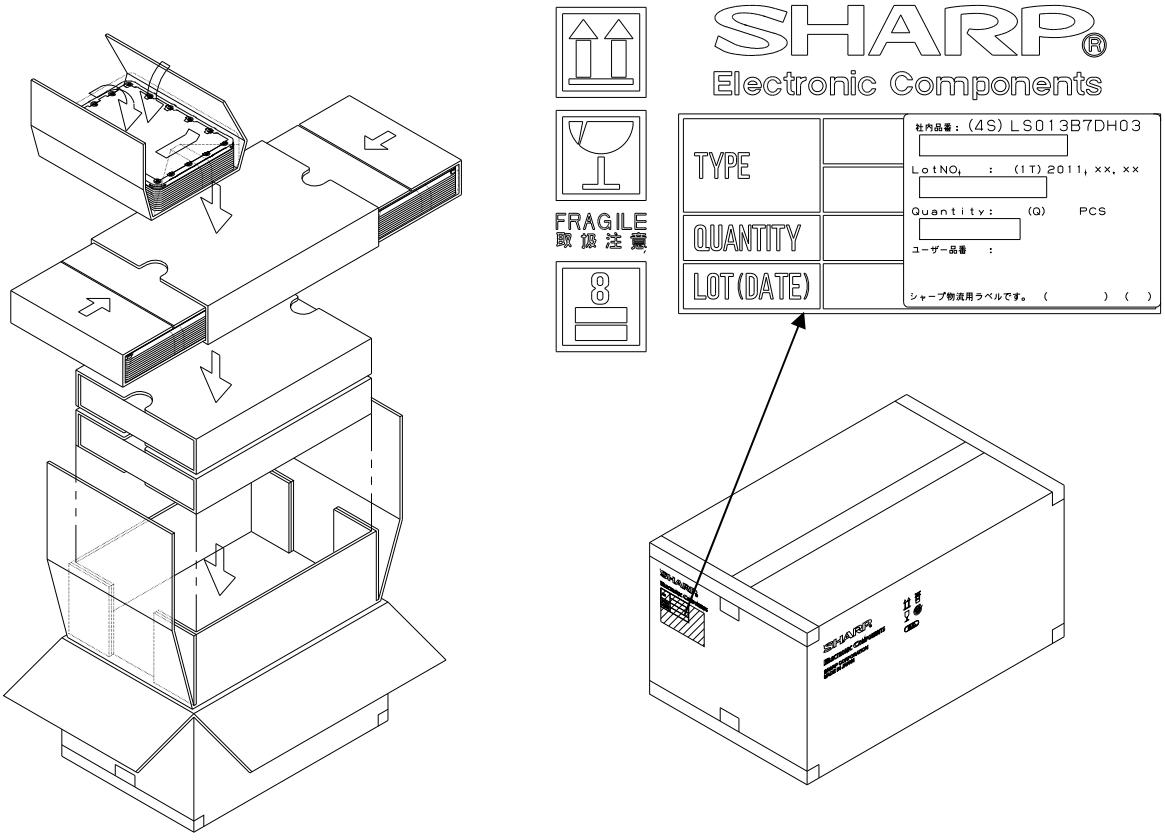

Packageing size ：578mmx382mmx255mm

Figure 10-2: packing condition

11. Reliability test conditions

Table 11 Reliability test items

	Test items	Test contents	Notes
1	High temperature storage	Ta=80°C 240h （Non-operating）	
2	Low temp. storage	Ta=-30°C 240h （Non-operating）	
3	High temp. high humidity operation	Tp=40°C /95%RH 240h	
4	High temp. operation	Tp=70°C 240h	
5	Low temp. operation	Tp=-20°C 240h	
6	Thermal shock	Ta=-30°C (1h)～+80°C (1h)/cycle＝5 cycles (Non-operating）	
7	Electrostatic resistance	±200V、200pF(0Ω) Once each pin	

【NB】Ta=ambient temperature、Tp=panel temperature

（Evaluation method）

In the standard condition, there shall be no practical problems that may affect the display function.