Low Phase Noise, Triple Output Clock Distribution Divider/Driver

FEATURES

- **Low Noise Clock Distribution: Suitable for High Speed/High Resolution ADC Clocking**
- **Additive Jitter < 20fs$_{RMS}$ (12kHz to 20MHz)**
- **Additive Jitter < 85fs$_{RMS}$ (10Hz to Nyquist)**
- **1.8GHz Maximum Input Frequency (LTC6954-1 When DELAY = 0)**
- **1.4GHz Maximum Input Frequency (LTC6954-1 When DELAY > 0, LTC6954-2, -3, -4)**
- **EZSync™ Clock Synchronization Compatible**
- **Three Independent, Low Noise Outputs**
- **Four Output Combinations Available**
- Three Independent Programmable Dividers Covering All Integers from 1 to 63
- Three Independent Programmable Delays Covering All Integers from 0 to 63
- –40°C to 105°C Junction Temperature Range

APPLICATIONS

- Clocking High Speed, High Resolution ADCs, DACs and Data Acquisition Systems
- Low Jitter Clock Distribution

All registered trademarks and trademarks are the property of their respective owners. Protected by U.S. patents, including 8319551, 8819472.

DESCRIPTION

The LTC®6954 is a family of very low phase noise clock distribution parts. Each part has three outputs and each output has an individually programmable frequency divider and delay. There are four members of the family, differing in their output logic signal type:

LTC6954-1: Three LVPECL outputs

LTC6954-2: Two LVPECL and one LVDS/CMOS outputs

LTC6954-3: One LVPECL and two LVDS/CMOS outputs

LTC6954-4: Three LVDS/CMOS outputs

Each output is individually programmable to divide the input frequency by any integer from 1 to 63, and to delay each output by 0 to 63 input clock cycles. The output duty cycle is always 50%, regardless of the divide number. The LVDS/CMOS outputs are jumper selectable via the OUTxSEL pins to provide either an LVDS logic output or a CMOS logic output.

The LTC6954 also features Linear Technology's EZSync system for perfect clock synchronization and alignment every time.

All device settings are controlled through an SPI-compatible serial port.

TYPICAL APPLICATION

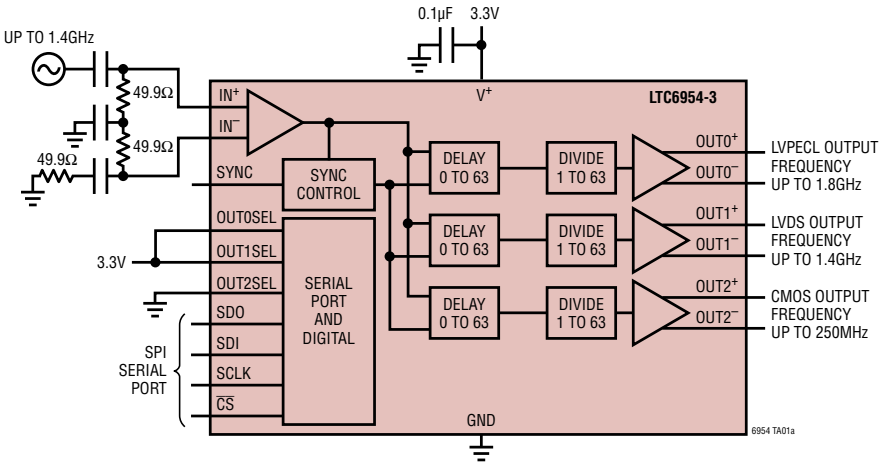

Additive Phase Noise vs Offset Frequency, f_{IN} = 622.08MHz, Mx[5:0] = 4, f_{OUTx} = 155.52MHz

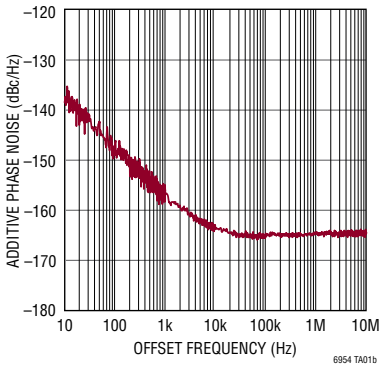

Rev. A

ABSOLUTE MAXIMUM RATINGS

(Note 1)

Supply Voltages
(V_A^+, V_D^+, V_{IN}^+, V_{OUT0}^+, V_{OUT1}^+ and V_{OUT2}^+ to GND) 3.6V
LTC6954-1, -2, -3 LVPECL Outputs
  OUTx Output Voltage High ..... V_{OUT}^+ + 0.3V
  OUTx Output Voltage Low ..... Source 25mA
LTC6954-2, -3, -4 LVDS/CMOS Outputs
  OUTx ..... –0.3V to (V_A^+ +0.3V)
TEMP Input Current 10mA
TEMP Low Voltage ..... –0.3V
Voltage on All Other Pins ..... –0.3V to (V_A^+ + 0.3V)
Operating Junction Temperature Range, T_J (Note 2)
LTC6954I ..... –40°C to 105°C
Junction Temperature, T_{JMAX} ..... 150°C
Storage Temperature Range ..... –65°C to 150°C

PIN CONFIGURATION

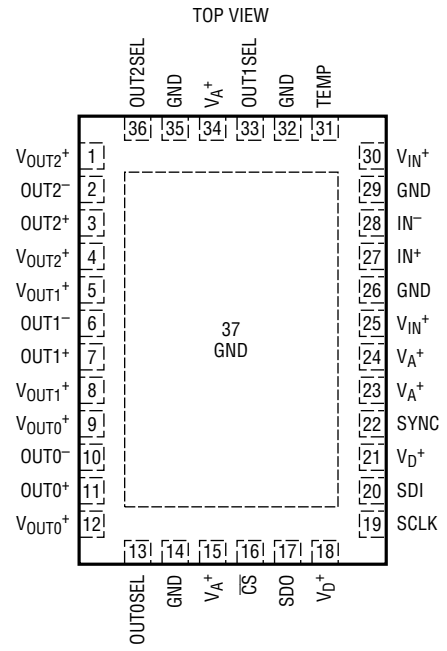

UFF PACKAGE
36-LEAD (4mm × 7mm) PLASTIC QFN
0.5mm LEAD PITCH

T_{JMAX} = 150°C, $\theta_{JCbottom}$ = 2°C/W, θ_{JCtop} = 18°C/W
EXPOSED PAD (PIN 37) IS GND, MUST BE SOLDERED TO PCB GND

ORDER INFORMATION

LEAD FREE FINISH	TAPE AND REEL	PART MARKING	PACKAGE DESCRIPTION	JUNCTION TEMPERATURE RANGE
LTC6954IUFF-1#PBF	LTC6954IUFF-1#TRPBF	69541	36-Lead (4mm × 7mm) Plastic QFN	–40°C to 105°C
LTC6954IUFF-2#PBF	LTC6954IUFF-2#TRPBF	69542	36-Lead (4mm × 7mm) Plastic QFN	–40°C to 105°C
LTC6954IUFF-3#PBF	LTC6954IUFF-3#TRPBF	69543	36-Lead (4mm × 7mm) Plastic QFN	–40°C to 105°C
LTC6954IUFF-4#PBF	LTC6954IUFF-4#TRPBF	69544	36-Lead (4mm × 7mm) Plastic QFN	–40°C to 105°C

Contact the factory for parts specified with wider operating temperature ranges.

Tape and reel specifications. Some packages are available in 500 unit reels through designated sales channels with #TRMPBF suffix.

ELECTRICAL CHARACTERISTICS

The ● denotes the specifications which apply over the full operating junction temperature range, otherwise specifications are at T_A = 25°C. $V_A^+ = V_D^+ = V_{IN}^+ = V_{OUT0}^+ = V_{OUT1}^+ = V_{OUT2}^+$ = 3.3V, unless otherwise specified. All voltages are with respect to GND. (Note 2)

SYMBOL	PARAMETER	CONDITIONS		MIN	TYP	MAX	UNITS
Input (IN⁺, IN⁻)							
f_{IN}	Input Frequency	LTC6954-1, DELx = 0 LTC6954-1 (DELx > 0), LTC6954-2, -3, -4	● ●			1800 1400	MHz MHz
V_{IN}	Input Signal Level	Single-Ended	●	0.2	0.8	1.5	V_{P-P}
	Input Slew Rate		●	100			V/µs
DC_{IN}	Input Duty Cycle				50		%
	Self-Bias Voltage		●	1.9	2.05	2.2	V
	Minimum Common Mode Level	400mV_{P-P} Differential Input			1.8		V
	Maximum Common Mode Level	400mV_{P-P} Differential Input			2.3		V
	Input Resistance	Differential	●	1.8	2.2	2.7	kΩ
	Input Capacitance	Differential			0.5		pF
Output Divider (M)							
Mx[5:0]	Divider Range M0[5:0], M1[5:0], M2[5:0]	All Integers Included	●	1		63	Cycles
DELx[5:0]	Divider Delay in Input Clock Cycles DEL0[5:0], DEL1[5:0], DEL2[5:0]	All Integers Included	●	0		63	Cycles
LVPECL Clock Outputs							
f_{OUT}	Frequency	LTC6954-1, DELx = 0 LTC6954-1 (DELx > 0), LTC6954-2, -3, -4	● ●			1800 1400	MHz MHz
$\|V_{OD}\|$	Differential Voltage (Output Static)	Single-Ended Termination = 50Ω to (V_{OUTx}^+ – 2V)	●	640	775	950	mV_{PK}
		Differential Termination = 100Ω, Internal Bias On	●	640	780	950	mV_{PK}
V_{CM}	Common Mode Voltage (Output Static)	Single-Ended Termination = 50Ω to (V_{OUTx}^+ – 2V)	●	V_{OUTx}^+ – 1.67	V_{OUTx}^+ – 1.42	V_{OUTx}^+ – 1.14	V
		Differential Termination = 100Ω, Internal Bias On	●	V_{OUTx}^+ – 1.67	V_{OUTx}^+ – 1.42	V_{OUTx}^+ – 1.14	V
t_{RISE}	Rise Time, 20% to 80%	Single-Ended Termination = 50Ω to (V_{OUTx}^+ – 2V)			110		ps
		Differential Termination = 100Ω, Internal Bias On			110		ps
t_{FALL}	Fall Time, 80% to 20%	Single-Ended Termination = 50Ω to (V_{OUTx}^+ – 2V)			110		ps
		Differential Termination = 100Ω, Internal Bias On			110		ps
DC_{LVPECL}	Duty Cycle	Mx[5:0] = 1			DC_{IN}		%
		Mx[5:0] > 1 (Even or Odd)	●	45	50	55	%
CMOS Clock Outputs							
f_{OUT}	Frequency		●			250	MHz
V_{OH}	High Voltage (Output Static)	2.5mA Load	●	V^+ – 0.4			V
V_{OL}	Low Voltage (Output Static)	2.5mA Load	●			0.4	V
t_{RISE}	Rise Time, 20% to 80%	C_{LOAD} = 2pF, CMSINV = 1			200		ps
t_{FALL}	Fall Time, 80% to 20%	C_{LOAD} = 2pF, CMSINV = 1			170		ps
DC_{CMOS}	Duty Cycle	Mx[5:0] = 1			DC_{IN}		%
		Mx[5:0] > 1 (Even or Odd)	●	45	50	55	%

ELECTRICAL CHARACTERISTICS

The ● denotes the specifications which apply over the full operating junction temperature range, otherwise specifications are at T_A = 25°C. $V_A^+ = V_D^+ = V_{IN}^+ = V_{OUT0}^+ = V_{OUT1}^+ = V_{OUT2}^+$ = 3.3V, unless otherwise specified. All voltages are with respect to GND. (Note 2)

SYMBOL	PARAMETER	CONDITIONS		MIN	TYP	MAX	UNITS
LVDS Clock Outputs							
f_{OUT}	Frequency	Differential Termination = 100Ω, 3.5mA Mode	●			800	MHz
		Differential Termination = 50Ω, 7mA Mode	●			1400	MHz
$\|V_{OD}\|$	Differential Voltage (Output Static)	Differential Termination = 100Ω, 3.5mA Mode	●	290	370	450	mV_{PK}
		Differential Termination = 50Ω, 7mA Mode	●	290	370	450	mV_{PK}
$\|\Delta V_{OD}\|$	Delta V_{OD} (Output Static)	Differential Termination = 100Ω, 3.5mA Mode	●	–30		30	mV
		Differential Termination = 50Ω, 7mA Mode	●	–30		30	mV
V_{OS}	Offset Voltage (Output Static)	Differential Termination = 100Ω, 3.5mA Mode	●	1.16	1.23	1.32	V
		Differential Termination = 50Ω, 7mA Mode	●	1.15	1.23	1.32	V
$\|\Delta V_{OS}\|$	Delta V_{OS} (Output Static)	Differential Termination = 100Ω, 3.5mA Mode	●	–15		15	mV
		Differential Termination = 50Ω, 7mA Mode	●	–15		15	mV
t_{RISE}	Rise Time, 20% to 80%	Differential Termination = 100Ω, 3.5mA Mode			240		ps
		Differential Termination = 50Ω, 7mA Mode			120		ps
t_{FALL}	Fall Time, 80% to 20%	Differential Termination = 100Ω, 3.5mA Mode			240		ps
		Differential Termination = 50Ω, 7mA Mode			120		ps
$\|I_{SA}\|$, $\|I_{SB}\|$	Short-Circuit Current to Common	Shorted to GND, 3.5mA Mode			16		mA
		Shorted to GND, 7mA Mode			25		mA
$\|I_{SAB}\|$	Short-Circuit Current to Complementary	3.5mA Mode			4		mA
		7mA Mode			8		mA
DC_{LVDS}	Duty Cycle	Mx[5:0] = 1			DC_{IN}		%
		Mx[5:0] > 1 (Even or Odd)	●	45	50	55	%
Output Propagation Delays							
$t_{PD(LVPECL)}$	Propagation Delay From IN to Any LVPECL Output	Mx[5:0] = 1	●	250	360	480	ps
		Mx[5:0] > 1	●	320	430	550	ps
	Temperature Variation of the Propagation Delay From IN to Any LVPECL Output	Mx[5:0] = 1	●		0.65		ps/°C
		Mx[5:0] > 1	●		0.68		ps/°C
$t_{PD(LVDS)}$	Propagation Delay From IN to Any LVDS Output, LVCSx = 1 (7mA Mode)	Mx[5:0] = 1	●	305	420	545	ps
		Mx[5:0] > 1	●	370	480	625	ps
	Temperature Variation of the Propagation Delay From IN to Any LVDS Output, LVCSx = 1 (7mA Mode)	Mx[5:0] = 1	●		0.8		ps/°C
		Mx[5:0] > 1	●		0.85		ps/°C
	Propagation Delay From IN to Any LVDS Output, LVCSx = 0 (3.5mA Mode)	Mx[5:0] = 1			480		ps
		Mx[5:0] > 1			550		ps
	Temperature Variation of the Propagation Delay From IN to Any LVDS Output, LVCSx = 0 (3.5mA Mode)	Mx[5:0] = 1	●		0.8		ps/°C
		Mx[5:0] > 1	●		0.85		ps/°C
$t_{PD(CMOS)}$	Propagation Delay From IN to Any CMOS Output, Complementary Outputs (CMSINVx = 1)	Mx[5:0] = 1			1.25		ns
		Mx[5:0] > 1			1.32		ns
	Temperature Variation of the Propagation Delay From IN to Any CMOS Output (CMSINVx = 1)	Mx[5:0] = 1	●		1.3		ps/°C
		Mx[5:0] > 1	●		1.4		ps/°C

ELECTRICAL CHARACTERISTICS

The ● denotes the specifications which apply over the full operating junction temperature range, otherwise specifications are at T_A = 25°C. $V_A^+ = V_D^+ = V_{IN}^+ = V_{OUT0}^+ = V_{OUT1}^+ = V_{OUT2}^+$ = 3.3V, unless otherwise specified. All voltages are with respect to GND. (Note 2)

SYMBOL	PARAMETER	CONDITIONS		MIN	TYP	MAX	UNITS
Output Skews							
t_{SKEW}	Skew: Any LVPECL Output to Any LVPECL Output	Mx[5:0], My[5:0] Both = 1 or Both > 1 IBIASx = 0 or 1	●	–50		50	ps
	Skew: Any LVPECL Output to Any LVDS Output	M_{LVPECL}[5:0], M_{LVDS}[5:0] Both = 1 or Both > 1 IBIASx = 0 or 1, LVCSy = 1			65		ps
	Skew: Any LVPECL Output to Any LVDS Output	M_{LVPECL}[5:0] = M_{LVDS}[5:0] = 1 or Both > 1 IBIASx = 0 or 1, LVCSx = 0			120		ps
	Skew: Any LVPECL Output to Any CMOS Output	M_{LVPECL}[5:0], M_{CMOS}[5:0] Both = 1 or Both > 1 IBIASx = 0 or 1, CMSINVy = 1			875		ps
	Skew: Any LVDS Output to Any LVDS Output	Mx[5:0], My[5:0] Both = 1 or Both > 1 LVCSx = 1 for Both Outputs	●	–50		50	ps
	Skew: Any LVDS Output to Any LVDS Output	Mx[5:0], My[5:0] Both = 1 or Both > 1 LVCSx = 0 for Both Outputs			5		ps
	Skew: Any LVDS Output (LVCSx = 1) to Any LVDS Output (LVCSy = 0)	Mx[5:0], My[5:0] Both = 1 or Both > 1 LVCSx = 1, LVCSy = 0			50		ps
	Skew: Any LVDS Output to Any CMOS Output	M_{LVDS}[5:0], M_{CMOS}[5:0] Both = 1 or Both > 1 LVCSx = 1, CMSINV = 1			800		ps
	Skew: Any CMOS Output to Any CMOS Output	Mx[5:0], My[5:0] Both = 1 or Both > 1 CMSINV = 1			5		ps
	Skew: Any CMOS Output to Any CMOS Output, the First Output is Complementary, the Second Output is In-Phase	CMSINVx = 1, CMSINVy = 0			30		ps
	Additional Skew: Any Output to Any Output, Dividers Not the Same	Mx[5:0] = 1, My[5:0] > 1	●	35	70	120	ps

ELECTRICAL CHARACTERISTICS

The ● denotes the specifications which apply over the full operating junction temperature range, otherwise specifications are at T_A = 25°C. $V_A^+ = V_D^+ = V_{IN}^+ = V_{OUT0}^+ = V_{OUT1}^+ = V_{OUT2}^+$ = 3.3V, unless otherwise specified. All voltages are with respect to GND. (Note 2)

SYMBOL	PARAMETER	CONDITIONS		MIN	TYP	MAX	UNITS
Supply Voltages							
	V_A^+ Supply Range		●	3.15	3.3	3.45	V
	V_D^+ Supply Range		●	3.15	3.3	3.45	V
	V_{IN}^+ Supply Range		●	3.15	3.3	3.45	V
	V_{OUT0}^+, V_{OUT1}^+, V_{OUT2}^+ Supply Range		●	3.15	3.3	3.45	V
Supply Current (Sum of V_A^+, V_D^+, V_{IN}^+, V_{OUT0}^+, V_{OUT1}^+, V_{OUT2}^+ Supply Currents)							
	LTC6954-1	f_{IN} = 1400MHz, Power-Up Default Configuration, OUT0SEL = OUT1SEL = OUT2SEL = V_A^+, IBIAS On for All Outputs, Outputs Terminated with 100Ω Differential	●		300	335	mA
		f_{IN} = 1400MHz, Power-Up Default Configuration, OUT0SEL = OUT1SEL = OUT2SEL = GND, IBIAS Off for All Outputs, Outputs Terminated with 50Ω to (V_{OUTx}^+ – 2V)	●		310	350	mA
	LTC6954-2	f_{IN} = 1400MHz, Power-Up Default Configuration, OUT0SEL = OUT1SEL = OUT2SEL = V_A^+, IBIAS On for LVPECL Outputs, LVDS/CMOS = LVDS, Outputs Terminated with 100Ω Differential	●		290	325	mA
		f_{IN} = 1400MHz, Power-Up Default Configuration, OUT0SEL = OUT1SEL = V_A^+, OUT2SEL = GND, IBIAS On for LVPECL Outputs, LVDS/CMOS = CMOS, M2[5:0] = 28, f_{OUT2} = 50MHz, LVPECL Outputs Terminated with 100Ω Differential	●		280	320	mA
	LTC6954-3	f_{IN} = 1400MHz, Power-Up Default Configuration, OUT0SEL = OUT1SEL = OUT2SEL = V_A^+, IBIAS On for LVPECL Output, LVDS/CMOS = LVDS, Outputs Terminated with 100Ω Differential	●		280	320	mA
		f_{IN} = 1400MHz, Power-Up Default Configuration, OUT0SEL = V_A^+, OUT1SEL = OUT2SEL = GND, IBIAS On for LVPECL Output, LVDS/CMOS = CMOS, M1[5:0] = M2[5:0] = 28, f_{OUT1} = f_{OUT2} = 50MHz, LVPECL Output Terminated with 100Ω Differential	●		278	315	mA
	LTC6954-4	f_{IN} = 1400MHz, Power-Up Default Configuration, OUT0SEL = OUT1SEL = OUT2SEL = V_A^+, LVDS/CMOS = LVDS, Outputs Terminated with 100Ω Differential	●		270	315	
		f_{IN} = 1400MHz, Power-Up Default Configuration, OUT0SEL = OUT1SEL = OUT2SEL = GND, LVDS/CMOS = CMOS, M0[5:0], M1[5:0] = M2[5:0] = 28, f_{OUT0} = f_{OUT1} = f_{OUT2} = 50MHz	●		282	310	mA
	ALL LTC6954 Variants	$P_{D(ALL)}$ = 1			0.8		mA

ELECTRICAL CHARACTERISTICS

The ● denotes the specifications which apply over the full operating junction temperature range, otherwise specifications are at T_A = 25°C. $V_A^+ = V_D^+ = V_{IN}^+ = V_{OUT0}^+ = V_{OUT1}^+ = V_{OUT2}^+$ = 3.3V, unless otherwise specified. All voltages are with respect to GND. (Note 2)

SYMBOL	PARAMETER	CONDITIONS		MIN	TYP	MAX	UNITS
Supply Current Delta (Note 3)							
	Output Divider On, LVPECL Output	PD_DIVx = 0, Mx[5:0] = 1, PD_OUTx = 1	●		28	32	mA
		PD_DIVx = 0, Mx[5:0] > 1, PD_OUTx = 1	●		46	54	mA
	Output Driver Only, LVPECL	PD_OUTx = 0, Termination = 50Ω to (V_{OUTx}^+ – 2V)	●		43	50	mA
		PD_OUTx = 0, IBIASx = 1 (Internal Bias On)	●		39	46	mA
		PD_OUTx = 0, No Internal/External Bias	●		19	24	mA
	Output Driver Only, LVDS	PD_OUTx = 0, 3.5mA Mode, LVCSx = 0	●		31	37	mA
		PD_OUTx = 0, 7mA Mode, LVCSx = 1	●		48	58	mA
	Output Driver Only, CMOS	PD_OUTx = 0, CMOS at 50MHz	●		35	43	mA
Digital Inputs ($\overline{CS}$, SDI, SCLK, SYNC, OUT0SEL, OUT1SEL, OUT2SEL)							
V_{IH}	Input High Voltage		●	1.55			V
V_{IL}	Input Low Voltage		●			0.8	V
V_{IHYS}	Input Voltage Hysteresis	CS, SDI and SCLK Only			250		mV
	Input Current		●	–1		1	µA
Digital Outputs (SDO)							
I_{OH}	High Level Output Current	SDO, $V_{OH} = V_D^+$ – 400mV	●		–2.4	–1.5	mA
I_{OL}	Low Level Output Current	SDO, V_{OL} = 400mV	●	2.2	3.4		mA
	SDO Hi-Z Current		●	–1		1	µA
Digital Timing Specifications (See Figure 11 and Figure 12)							
t_{CKH}	SCLK HIGH Pulse Width		●	25			ns
t_{CKL}	SCLK LOW Pulse Width		●	25			ns
t_{CSS}	$\overline{CS}$ Setup Time		●	10			ns
t_{CSH}	$\overline{CS}$ HIGH Pulse Width		●	10			ns
t_{CS}	SDI to SCLK Setup Time		●	6			ns
t_{CH}	SDI to SCLK Hold Time		●	6			ns
t_{DO}	SDO Propagation Delay	C_{LOAD} = 10pF			16		ns
t_{SYNCH}	SYNC HIGH Pulse Width		●	1			ms
t_{SYNCL}	Minimum SYNC LOW Pulse Width	Before Next SYNC HIGH Pulse			1		ms

ELECTRICAL CHARACTERISTICS

The ● denotes the specifications which apply over the full operating junction temperature range, otherwise specifications are at T_A = 25°C. $V_A^+ = V_D^+ = V_{IN}^+ = V_{OUT0}^+ = V_{OUT1}^+ = V_{OUT2}^+$ = 3.3V, unless otherwise specified. All voltages are with respect to GND. (Note 2)

SYMBOL	PARAMETER	CONDITIONS		MIN	TYP	MAX	UNITS
LVPECL Additive Phase Noise/Time Jitter (Note 5)							
	Phase Noise: f_{IN} = 622.08MHz, Mx[5:0] = 1, f_{OUT} = 622.08MHz	10Hz Offset			–130		dBc/Hz
		100Hz Offset			–139		dBc/Hz
		1kHz Offset			–148		dBc/Hz
		10kHz Offset			–156		dBc/Hz
		100kHz Offset			–158		dBc/Hz
		>1MHz Offset			–158		dBc/Hz
	Jitter: f_{IN} = 622.08MHz, Mx[5:0] = 1, f_{OUT} = 622.08MHz	12kHz to 20MHz Integration Bandwidth			20		fs_{RMS}
		10Hz to 311.04MHz Integration Bandwidth			80		fs_{RMS}
	Phase Noise: f_{IN} = 622.08MHz, Mx[5:0] = 4, f_{OUT} = 155.52MHz	10Hz Offset			–138		dBc/Hz
		100Hz Offset			–147		dBc/Hz
		1kHz Offset			–156		dBc/Hz
		10kHz Offset			–163		dBc/Hz
		100kHz Offset			–165		dBc/Hz
		>1MHz Offset			–165		dBc/Hz
	Jitter: f_{IN} = 622.08MHz, Mx[5:0] = 4, f_{OUT} = 155.52MHz	12kHz to 20MHz Integration Bandwidth			36		fs_{RMS}
		10Hz to 77.75MHz Integration Bandwidth			72		fs_{RMS}
	Phase Noise: f_{IN} = 622.08MHz, Mx[5:0] = 16, f_{OUT} = 38.88MHz	10Hz Offset			–147		dBc/Hz
		100Hz Offset			–159		dBc/Hz
		1kHz Offset			–167		dBc/Hz
		10kHz Offset			–170		dBc/Hz
		100kHz Offset			–171		dBc/Hz
		>1MHz Offset			–171		dBc/Hz
	Phase Noise: f_{IN} = 245.76MHz, Mx[5:0] = 1, f_{OUT} = 245.76MHz	10Hz Offset			–137		dBc/Hz
		100Hz Offset			–147		dBc/Hz
		1kHz Offset			–156		dBc/Hz
		10kHz Offset			–161		dBc/Hz
		100kHz Offset			–162		dBc/Hz
		>1MHz Offset			–162		dBc/Hz
	Jitter: f_{IN} = 245.76MHz, Mx[5:0] = 1, f_{OUT} = 245.76MHz	12kHz to 20MHz Integration Bandwidth			33		fs_{RMS}
		10Hz to 122.88MHz Integration Bandwidth			81		fs_{RMS}
	Phase Noise: f_{IN} = 245.76MHz, Mx[5:0] = 4, f_{OUT} = 61.44MHz	10Hz Offset			–140		dBc/Hz
		100Hz Offset			–153		dBc/Hz
		1kHz Offset			–161		dBc/Hz
		10kHz Offset			–166		dBc/Hz
		100kHz Offset			–168		dBc/Hz
		>1MHz Offset			–168		dBc/Hz
	Jitter: f_{IN} = 245.76MHz, Mx[5:0] = 4, f_{OUT} = 61.44MHz	12kHz to 20MHz Integration Bandwidth			65		fs_{RMS}

ELECTRICAL CHARACTERISTICS

The ● denotes the specifications which apply over the full operating junction temperature range, otherwise specifications are at T_A = 25°C. $V_A^+ = V_D^+ = V_{IN}^+ = V_{OUT0}^+ = V_{OUT1}^+ = V_{OUT2}^+$ = 3.3V, unless otherwise specified. All voltages are with respect to GND. (Note 2)

SYMBOL	PARAMETER	CONDITIONS		MIN	TYP	MAX	UNITS
LVPECL Additive Phase Noise/Time Jitter (Note 5)							
	Phase Noise: f_{IN} = 1400MHz, Mx[5:0] = 1, f_{OUT} = 1400MHz	10Hz Offset			–126		dBc/Hz
		100Hz Offset			–132		dBc/Hz
		1kHz Offset			–143		dBc/Hz
		10kHz Offset			–149		dBc/Hz
		100kHz Offset			–152.5		dBc/Hz
		>1MHz Offset			–152.5		dBc/Hz
	Jitter: f_{IN} = 1400MHz, Mx[5:0] = 1, f_{OUT} = 1400MHz	12kHz to 20MHz Integration Bandwidth			17		fs_{RMS}
		10Hz to 700MHz Integration Bandwidth			100		fs_{RMS}
	Phase Noise: f_{IN} = 1400MHz, Mx[5:0] = 4, f_{OUT} = 350MHz	10Hz Offset			–132		dBc/Hz
		100Hz Offset			–139		dBc/Hz
		1kHz Offset			–151		dBc/Hz
		10kHz Offset			–157		dBc/Hz
		100kHz Offset			–160		dBc/Hz
		>1MHz Offset			–160		dBc/Hz
	Jitter: f_{IN} = 1400MHz, Mx[5:0] = 4, f_{OUT} = 350MHz	12kHz to 20MHz Integration Bandwidth			29		fs_{RMS}
		10Hz to 175MHz Integration Bandwidth			85		fs_{RMS}
LVDS Additive Phase Noise/Time Jitter LVCS = 1 (Note 5)							
	Phase Noise: f_{IN} = 622.08MHz, Mx[5:0] = 1, f_{OUT} = 622.08MHz	10Hz Offset			–130		dBc/Hz
		100Hz Offset			–138		dBc/Hz
		1kHz Offset			–148		dBc/Hz
		10kHz Offset			–156		dBc/Hz
		100kHz Offset			–157.5		dBc/Hz
		>1MHz Offset			–157.5		dBc/Hz
	Jitter: f_{IN} = 622.08MHz, Mx[5:0] = 1, f_{OUT} = 622.08MHz	12kHz to 20MHz Integration Bandwidth			21		fs_{RMS}
		10Hz to 311.04MHz Integration Bandwidth			83		fs_{RMS}
	Phase Noise: f_{IN} = 622.08MHz, Mx[5:0] = 4, f_{OUT} = 155.52MHz	10Hz Offset			–140		dBc/Hz
		100Hz Offset			–147		dBc/Hz
		1kHz Offset			–157		dBc/Hz
		10kHz Offset			–163		dBc/Hz
		100kHz Offset			–165		dBc/Hz
		>1MHz Offset			–165		dBc/Hz
	Jitter: f_{IN} = 622.08MHz, Mx[5:0] = 4, f_{OUT} = 155.52MHz	12kHz to 20MHz Integration Bandwidth			36		fs_{RMS}
		10Hz to 77.75MHz Integration Bandwidth			72		fs_{RMS}
	Phase Noise: f_{IN} = 622.08MHz, Mx[5:0] = 16, f_{OUT} = 38.88MHz	10Hz Offset			–147		dBc/Hz
		100Hz Offset			–159		dBc/Hz
		1kHz Offset			–166		dBc/Hz
		10kHz Offset			–170		dBc/Hz
		100kHz Offset			–170		dBc/Hz
		>1MHz Offset			–170		dBc/Hz

ELECTRICAL CHARACTERISTICS

The ● denotes the specifications which apply over the full operating junction temperature range, otherwise specifications are at T_A = 25°C. $V_A^+ = V_D^+ = V_{IN}^+ = V_{OUT0}^+ = V_{OUT1}^+ = V_{OUT2}^+$ = 3.3V, unless otherwise specified. All voltages are with respect to GND. (Note 2)

SYMBOL	PARAMETER	CONDITIONS		MIN	TYP	MAX	UNITS
LVDS Additive Phase Noise/Time Jitter LVCS = 1 (Note 5)							
	Phase Noise: f_{IN} = 245.76MHz, Mx[5:0] = 1, f_{OUT} = 245.76MHz	10Hz Offset			–138		dBc/Hz
		100Hz Offset			–146		dBc/Hz
		1kHz Offset			–155		dBc/Hz
		10kHz Offset			–160		dBc/Hz
		100kHz Offset			–162		dBc/Hz
		>1MHz Offset			–162		dBc/Hz
	Jitter: f_{IN} = 245.76MHz, Mx[5:0] = 1, f_{OUT} = 245.76MHz	12kHz to 20MHz Integration Bandwidth			34		fs_{RMS}
		10Hz to 122.88MHz Integration Bandwidth			83		fs_{RMS}
	Phase Noise: f_{IN} = 245.76MHz, Mx[5:0] = 4, f_{OUT} = 61.44MHz	10Hz Offset			–142		dBc/Hz
		100Hz Offset			–153		dBc/Hz
		1kHz Offset			–162		dBc/Hz
		10kHz Offset			–167		dBc/Hz
		100kHz Offset			–168		dBc/Hz
		>1MHz Offset			–168		dBc/Hz
	Jitter: f_{IN} = 245.76MHz, Mx[5:0] = 4, f_{OUT} = 61.4MHz	12kHz to 20MHz Integration Bandwidth			65		fs_{RMS}
	Phase Noise: f_{IN} = 1400MHz, Mx[5:0] = 1, f_{OUT} = 1400MHz	10Hz Offset			–121		dBc/Hz
		100Hz Offset			–133		dBc/Hz
		1kHz Offset			–142		dBc/Hz
		10kHz Offset			–148		dBc/Hz
		100kHz Offset			–152		dBc/Hz
		>1MHz Offset			–152		dBc/Hz
	Jitter: f_{IN} = 1400MHz, Mx[5:0] = 1, f_{OUT} = 1400MHz	12kHz to 20MHz Integration Bandwidth			18		fs_{RMS}
		10Hz to 700MHz Integration Bandwidth			109		fs_{RMS}
	Phase Noise: f_{IN} = 1400MHz, Mx[5:0] = 4, f_{OUT} = 350MHz	10Hz Offset			–129		dBc/Hz
		100Hz Offset			–137		dBc/Hz
		1kHz Offset			–148		dBc/Hz
		10kHz Offset			–156		dBc/Hz
		100kHz Offset			–159		dBc/Hz
		>1MHz Offset			–160		dBc/Hz
	Jitter: f_{IN} = 1400MHz, Mx[5:0] = 4, f_{OUT} = 350MHz	12kHz to 20MHz Integration Bandwidth			30		fs_{RMS}
		10Hz to 175MHz Integration Bandwidth			90		fs_{RMS}

ELECTRICAL CHARACTERISTICS

The ● denotes the specifications which apply over the full operating junction temperature range, otherwise specifications are at T_A = 25°C. $V_A^+ = V_D^+ = V_{IN}^+ = V_{OUT0}^+ = V_{OUT1}^+ = V_{OUT2}^+$ = 3.3V, unless otherwise specified. All voltages are with respect to GND. (Note 2)

SYMBOL	PARAMETER	CONDITIONS		MIN	TYP	MAX	UNITS
LVDS Additive Phase Noise/Time Jitter LVCS = 0 (Note 5)							
	Phase Noise: f_{IN} = 622.08MHz, Mx[5:0] = 1, f_{OUT} = 622.08MHz	10Hz Offset			–123		dBc/Hz
		100Hz Offset			–135		dBc/Hz
		1kHz Offset			–146		dBc/Hz
		10kHz Offset			–151		dBc/Hz
		100kHz Offset			–153		dBc/Hz
		>1MHz Offset			–153		dBc/Hz
	Jitter: f_{IN} = 622.08MHz, Mx[5:0] = 1, f_{OUT} = 622.08MHz	12kHz to 20MHz Integration Bandwidth			36		fs_{RMS}
		10Hz to 311.04MHz Integration Bandwidth			140		fs_{RMS}
	Phase Noise: f_{IN} = 622.08MHz, Mx[5:0] = 4, f_{OUT} = 155.52MHz	10Hz Offset			–135		dBc/Hz
		100Hz Offset			–146		dBc/Hz
		1kHz Offset			–154		dBc/Hz
		10kHz Offset			–160		dBc/Hz
		100kHz Offset			–161		dBc/Hz
		>1MHz Offset			–161		dBc/Hz
	Jitter: f_{IN} = 622.08MHz, Mx[5:0] = 4, f_{OUT} = 155.52MHz	12kHz to 20MHz Integration Bandwidth			29		fs_{RMS}
		10Hz to 77.75MHz Integration Bandwidth			114		fs_{RMS}
	Phase Noise: f_{IN} = 622.08MHz, Mx[5:0] = 16, f_{OUT} = 38.88MHz	10Hz Offset			–147		dBc/Hz
		100Hz Offset			–157		dBc/Hz
		1kHz Offset			–165		dBc/Hz
		10kHz Offset			–167		dBc/Hz
		100kHz Offset			–167		dBc/Hz
		>1MHz Offset			–167		dBc/Hz

ELECTRICAL CHARACTERISTICS

The ● denotes the specifications which apply over the full operating junction temperature range, otherwise specifications are at T_A = 25°C. $V_A^+ = V_D^+ = V_{IN}^+ = V_{OUT0}^+ = V_{OUT1}^+ = V_{OUT2}^+$ = 3.3V, unless otherwise specified. All voltages are with respect to GND. (Note 2)

SYMBOL	PARAMETER	CONDITIONS		MIN	TYP	MAX	UNITS
CMOS Additive Phase Noise/Time Jitter (Note 5)							
	Phase Noise: f_{IN} = 622.08MHz, Mx[5:0] = 4, f_{OUT} = 155.52MHz	10Hz Offset			–129		dBc/Hz
		100Hz Offset			–143		dBc/Hz
		1kHz Offset			–158		dBc/Hz
		10kHz Offset			–161		dBc/Hz
		100kHz Offset			–162		dBc/Hz
		>1MHz Offset			–162		dBc/Hz
	Jitter: f_{IN} = 622.08MHz, Mx[5:0] = 4, f_{OUT} = 155.52MHz	12kHz to 20MHz Integration Bandwidth			52		fs_{RMS}
		10Hz to 77.75MHz Integration Bandwidth			102		fs_{RMS}
	Phase Noise: f_{IN} = 245.76MHz, Mx[5:0] = 1, f_{OUT} = 245.76MHz	10Hz Offset			–129		dBc/Hz
		100Hz Offset			–139		dBc/Hz
		1kHz Offset			–146		dBc/Hz
		10kHz Offset			–155		dBc/Hz
		100kHz Offset			–159		dBc/Hz
		>1MHz Offset			–160		dBc/Hz
	Jitter: f_{IN} = 245.76MHz, Mx[5:0] = 1, f_{OUT} = 245.76MHz	12kHz to 20MHz Integration Bandwidth			42		fs_{RMS}
		10Hz to 122.88MHz Integration Bandwidth			102		fs_{RMS}
	Phase Noise: f_{IN} = 245.76MHz, Mx[5:0] = 4, f_{OUT} = 61.44MHz	10Hz Offset			–135		dBc/Hz
		100Hz Offset			–147		dBc/Hz
		1kHz Offset			–156		dBc/Hz
		10kHz Offset			–163		dBc/Hz
		100kHz Offset			–166		dBc/Hz
		>1MHz Offset			–166		dBc/Hz
	Jitter: f_{IN} = 245.76MHz, Mx[5:0] = 4, f_{OUT} = 61.44MHz	12kHz to 20MHz Integration Bandwidth			82		fs_{RMS}

Note 1: Stresses beyond those listed under Absolute Maximum Ratings may cause permanent damage to the device. Exposure to any Absolute Maximum Rating condition for extended periods may affect device reliability and lifetime.

Note 2: The LTC6954I is guaranteed to meet specified performance limits over the full operating junction temperature range of –40°C to 105°C. Under maximum operating conditions, air flow or heat sinking may be required to maintain a junction temperature of 105°C or lower. It is strongly recommended that the exposed pad (pin 37) be soldered directly to the ground plane with an array of thermal vias as described in the Applications Information section.

Note 3: The supply current delta specifications refer to the amount of supply current that each individual block consumes. Powering on or off this circuit block adds or subtracts this much current from the total supply current consumed in any given configuration.

Note 4: The skews are defined as the second listed output's transition relative to the first listed output's transition. If the second listed output transitions after the first listed output, the skew is positive.

For the same divider setting, LVPECL outputs have nominally the same skew regardless of the IBIAS setting (IBIASx = 0 or 1), for the same divider setting, all LVDS and CMOS outputs transition after the LVPECL outputs, thus these skews are positive. For the same divider setting, all CMOS outputs transition after all LVDS outputs, thus these skews are positive. For the same divider setting, LVDS outputs with the 3.5mA current setting (LVCS = 0) transition after LVDS outputs with the 7mA current setting (LVCS = 1), thus these skews are positive. For the same divider setting, in-phase CMOS outputs (CMSINVx = 0) transition after complementary outputs (CMSINVx = 1), thus this skew is positive.

For the same output type, outputs with the divider setting greater than one (Mx[5:0] > 1) transition after outputs with the divider equal to one (Mx[5:0] = 1), thus this additional skew is positive.

Note 5: Additive phase noise and jitter are the phase noise added by the LTC6954. It does not include noise from the external signal source.

TYPICAL PERFORMANCE CHARACTERISTICS

$V_A^+ = V_D^+ = V_{IN}^+ = V_{OUT0}^+ = V_{OUT1}^+ = V_{OUT2}^+ = 3.3V$.
$T_A = 25°C$, unless otherwise specified. All voltages are with respect to GND.

LVPECL Differential Output at 1400MHz, IBIAS Enabled, R_{TERM} = 100Ω Differential

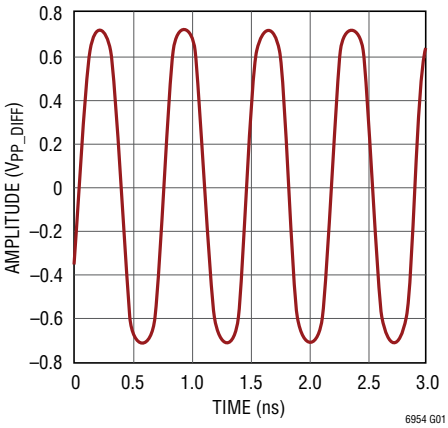

LVPECL Differential Output at 800MHz, IBIAS Enabled, R_{TERM} = 100Ω Differential

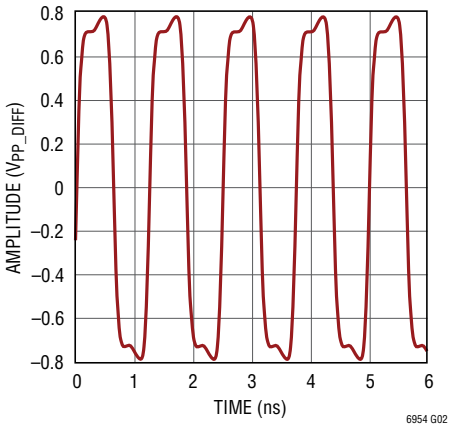

LVPECL Differential Output Swing vs Frequency, IBIAS Enabled, R_{TERM} = 100Ω Differential

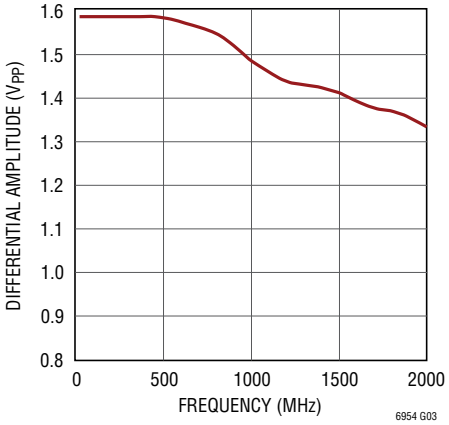

LVPECL Differential Output at 1400MHz, IBIAS Disabled, R_{TERM} = 50Ω to V^+ – 2V

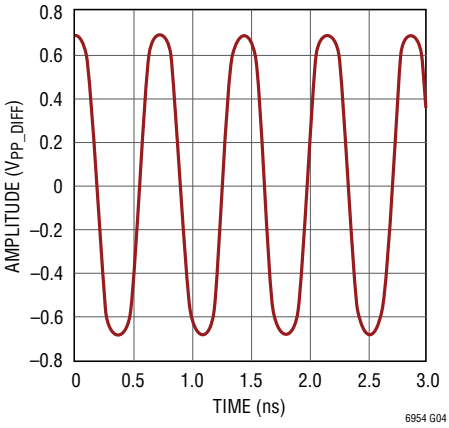

LVPECL Differential Output at 800MHz, IBIAS Disabled, R_{TERM} = 50Ω to V^+ – 2V

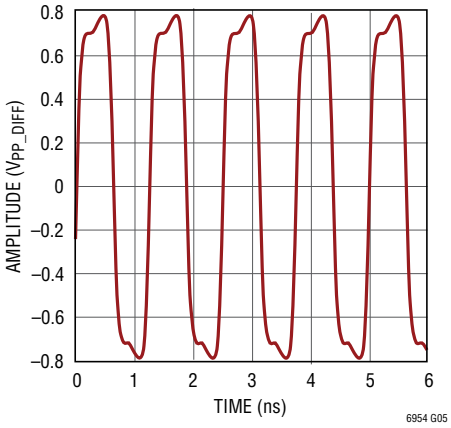

LVPECL Differential Output Swing vs Frequency, IBIAS Disabled, R_{TERM} = 50Ω to V^+ – 2V

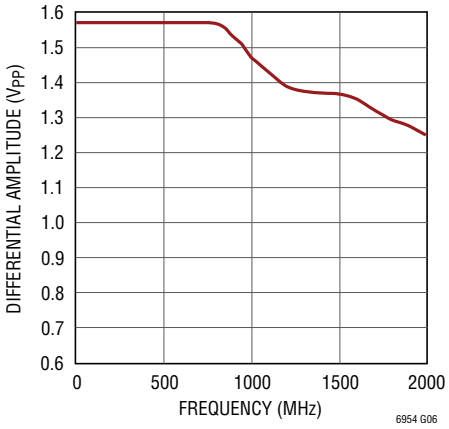

LVDS Differential Output at 800MHz, I_{LVDS} = 3.5mA, R_{TERM} = 100Ω (Differential)

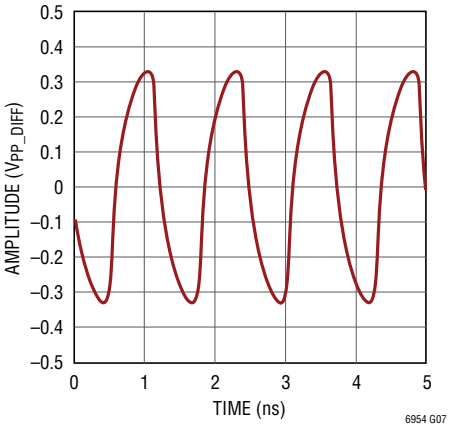

LVDS Differential Output at 300MHz, I_{LVDS} = 3.5mA, R_{TERM} = 100Ω (Differential)

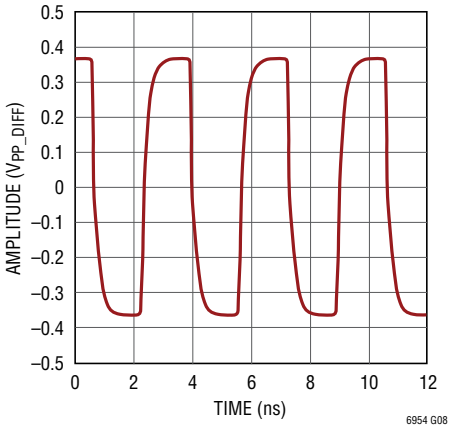

LVDS Differential Output Swing vs Frequency, I_{LVDS} = 3.5mA, R_{TERM} = 100Ω (Differential)

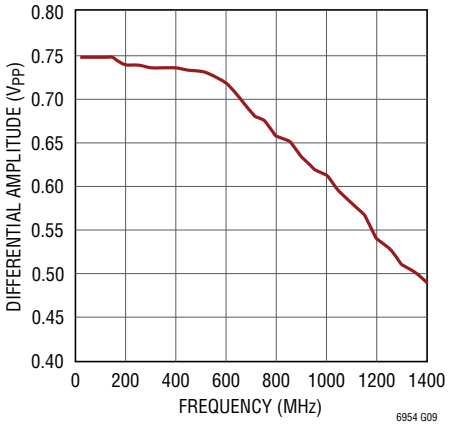

TYPICAL PERFORMANCE CHARACTERISTICS

$V_A^+ = V_D^+ = V_{IN}^+ = V_{OUT0}^+ = V_{OUT1}^+ = V_{OUT2}^+ = 3.3V$.
$T_A = 25°C$, unless otherwise specified. All voltages are with respect to GND.

LVDS Differential Output at 1400MHz, I_{LVDS} = 7mA, R_{TERM} = 100Ω||100Ω (Differential)

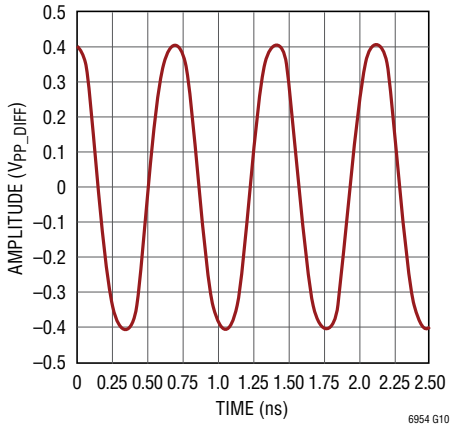

LVDS Differential Output at 800MHz, I_{LVDS} = 7mA, R_{TERM} = 100Ω||100Ω (Differential)

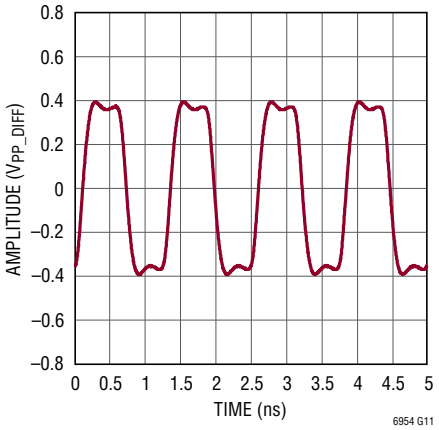

LVDS Differential Output Swing vs Frequency, I_{LVDS} = 7mA, R_{TERM} = 100Ω||100Ω (Differential)

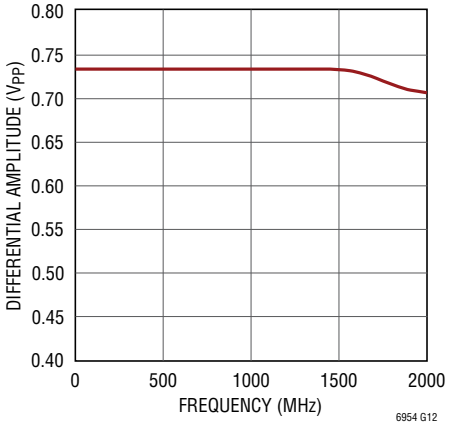

CMOS Output at 250MHz, CMSINV = 1, C_{LOAD} = 2pF

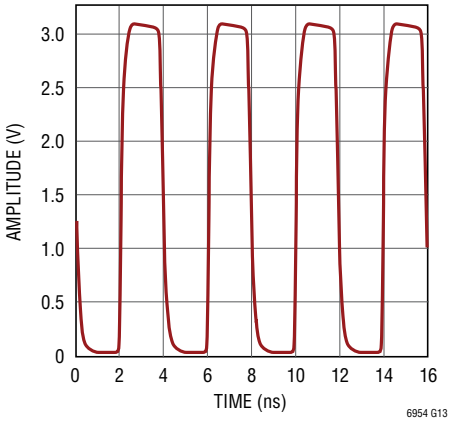

CMOS Output at 100MHz, CMSINV = 1, C_{LOAD} = 2pF

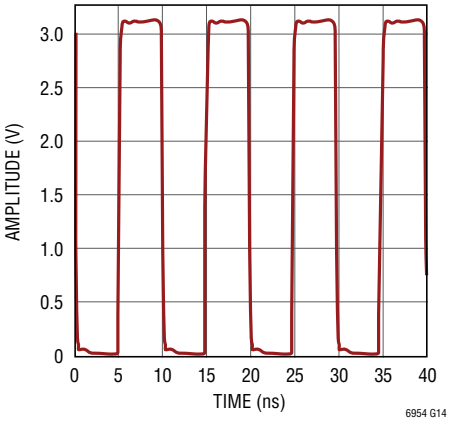

CMOS Output Swing vs Frequency and C_{LOAD}

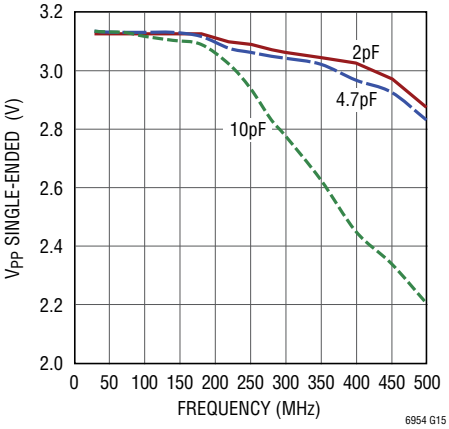

LVPECL Output Additive Phase Noise, f_{IN} = 1400MHz, IBIAS Enabled, R_{TERM} = 100Ω Differential

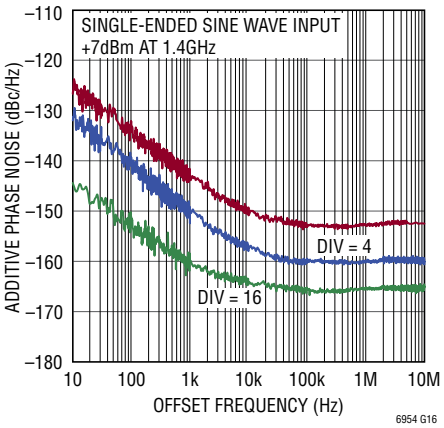

LVPECL Output Additive Phase Noise, f_{IN} = 622.08MHz, IBIAS Enabled, R_{TERM} = 100Ω Differential

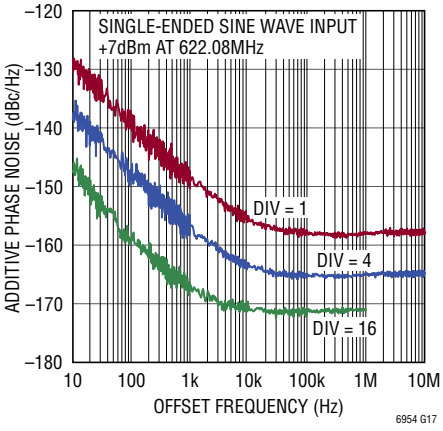

LVPECL Output Additive Phase Noise, f_{IN} = 245.76MHz, IBIAS Enabled, R_{TERM} = 100Ω Differential

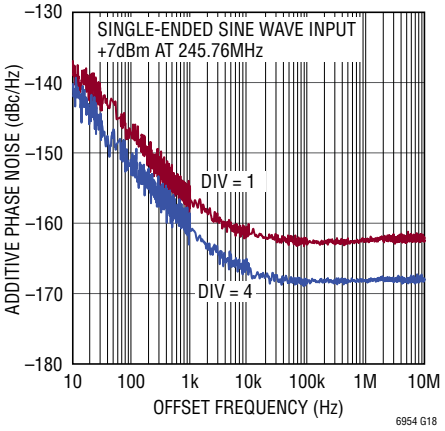

Rev. A

TYPICAL PERFORMANCE CHARACTERISTICS

$V_A^+ = V_D^+ = V_{IN}^+ = V_{OUT0}^+ = V_{OUT1}^+ = V_{OUT2}^+ = 3.3V$. $T_A = 25°C$, unless otherwise specified. All voltages are with respect to GND.

LVPECL Output Additive Phase Noise, f_{IN} = 1400MHz, IBIAS Disabled, R_{TERM} = 50Ω to V⁺ – 2V

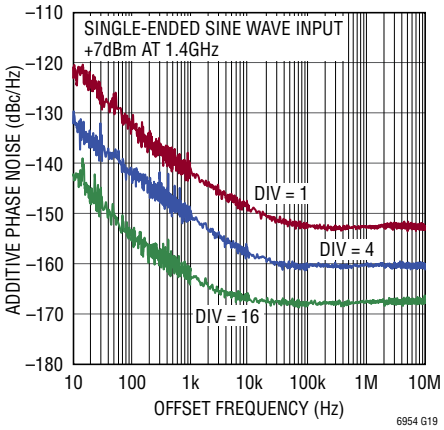

LVPECL Output Additive Phase Noise, f_{IN} = 622.08MHz, IBIAS Disabled, R_{TERM} = 50Ω to V⁺ – 2V

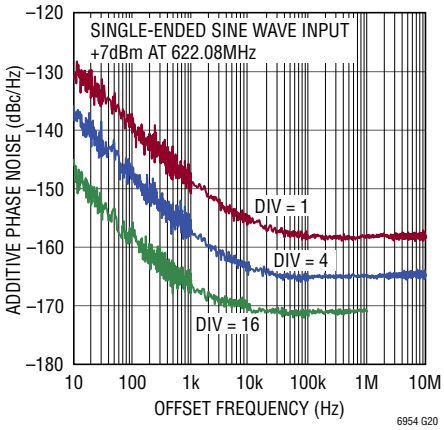

LVPECL Output Additive Phase Noise, f_{IN} = 245.76MHz, IBIAS Disabled, R_{TERM} = 50Ω to V⁺ – 2V

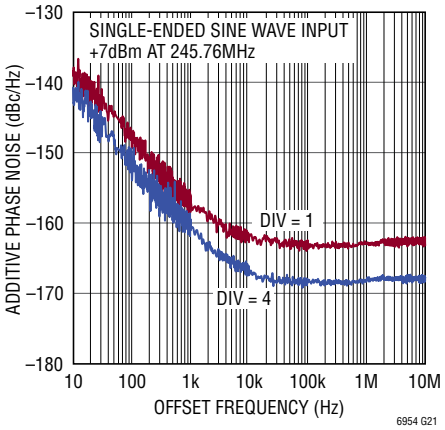

LVDS Output Additive Phase Noise, f_{IN} = 622.08MHz, I_{LVDS} = 3.5mA, R_{TERM} = 100Ω Differential

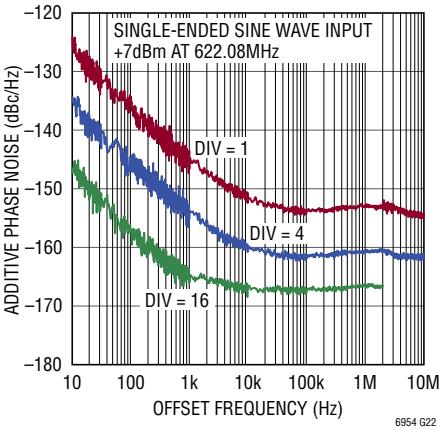

LVDS Output Additive Phase Noise, f_{IN} = 245.76MHz, I_{LVDS} = 3.5mA, R_{TERM} = 100Ω Differential

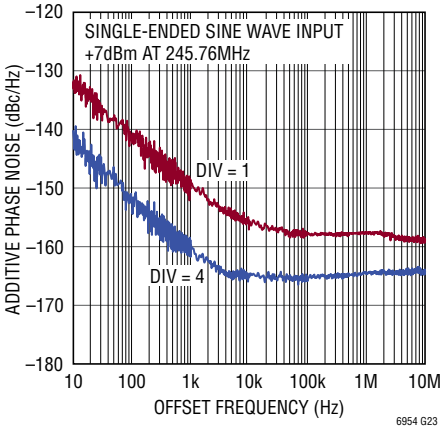

LVDS Output Additive Phase Noise, f_{IN} = 122.88MHz, I_{LVDS} = 3.5mA, R_{TERM} = 100Ω Differential

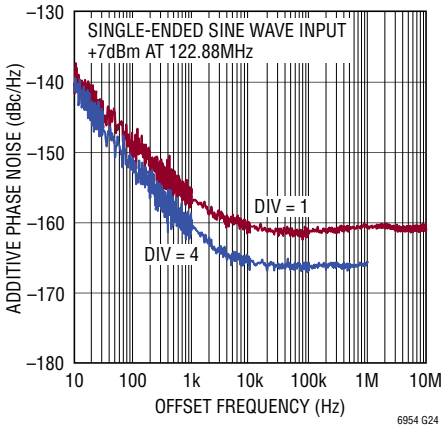

LVDS Output Additive Phase Noise, f_{IN} = 1400MHz, I_{LVDS} = 7mA, R_{TERM} = 100Ω||100Ω (Differential)

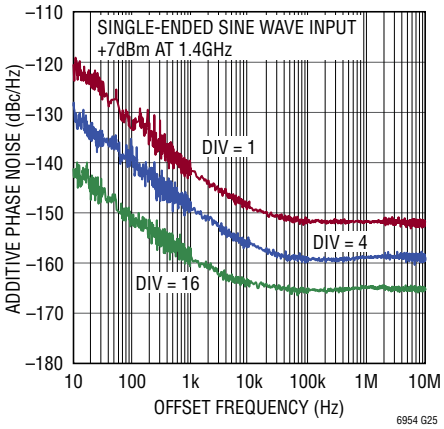

LVDS Output Additive Phase Noise, f_{IN} = 622.08MHz, I_{LVDS} = 7mA, R_{TERM} = 100Ω||100Ω (Differential)

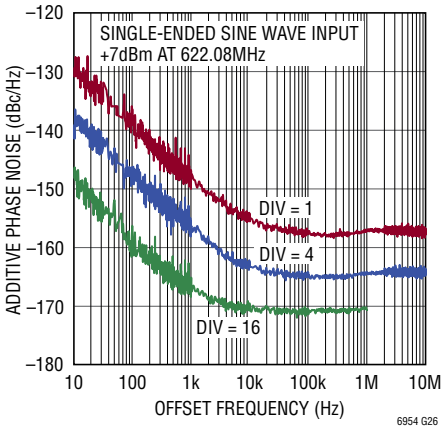

LVDS Output Additive Phase Noise, f_{IN} = 245.76MHz, I_{LVDS} = 7mA, R_{TERM} = 100Ω||100Ω (Differential)

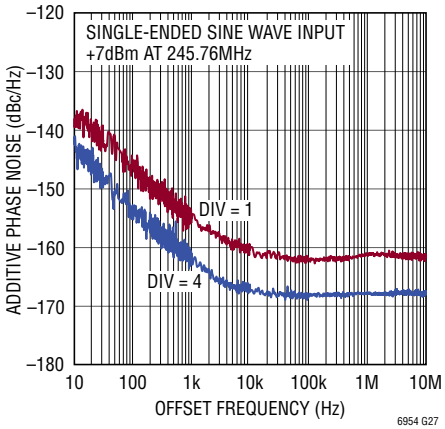

TYPICAL PERFORMANCE CHARACTERISTICS

$V_A^+ = V_D^+ = V_{IN}^+ = V_{OUT0}^+ = V_{OUT1}^+ = V_{OUT2}^+ = 3.3V$. $T_A = 25°C$, unless otherwise specified. All voltages are with respect to GND.

CMOS Output Additive Phase Noise, f_{IN} = 245.76MHz

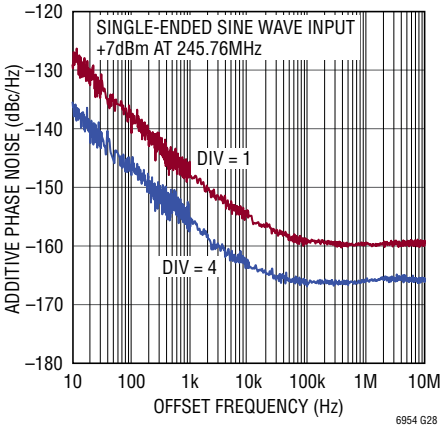

CMOS Output Additive Phase Noise, f_{IN} = 122.88MHz

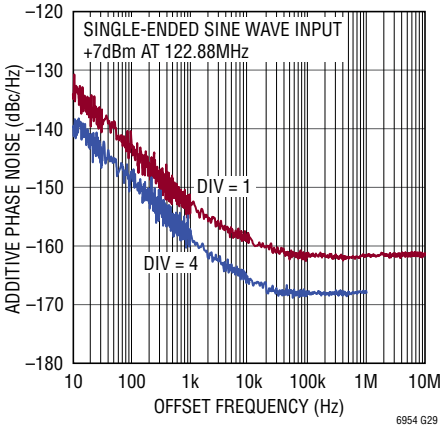

Additive Phase Noise Floor vs Divider Ratio F_{IN} = 1GHz, LVPECL IBIAS Enabled R_{TERM} = 100Ω Differential

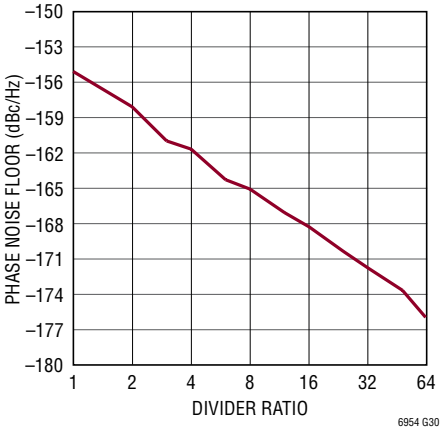

Supply Current vs Frequency, LVPECL Output, IBIAS Enabled, R_{TERM} = 100Ω Differential

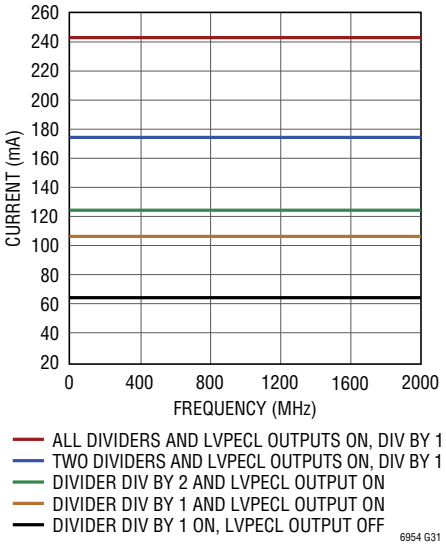

Supply Current vs Frequency, LVPECL Output, IBIAS Disabled, R_{TERM} = 50Ω to V^+ – 2V

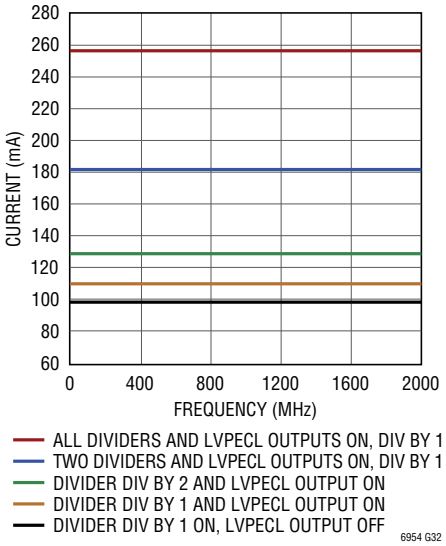

Supply Current vs Frequency, CMOS Output

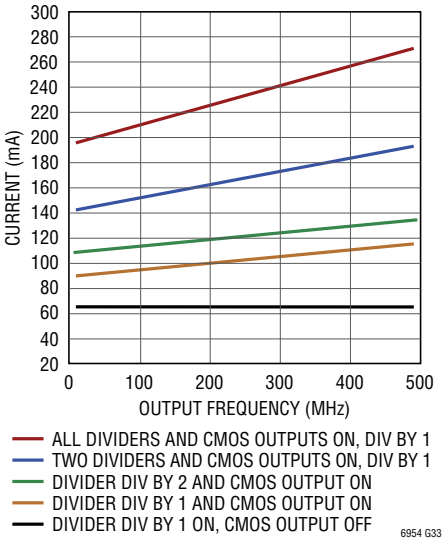

TYPICAL PERFORMANCE CHARACTERISTICS

$V_A^+ = V_D^+ = V_{IN}^+ = V_{OUT0}^+ = V_{OUT1}^+ = V_{OUT2}^+ = 3.3V$.
$T_A = 25°C$, unless otherwise specified. All voltages are with respect to GND.

Supply Current vs Frequency, LVDS Output, I_{LVDS} = 3.5mA, R_{TERM} = 100Ω Differential

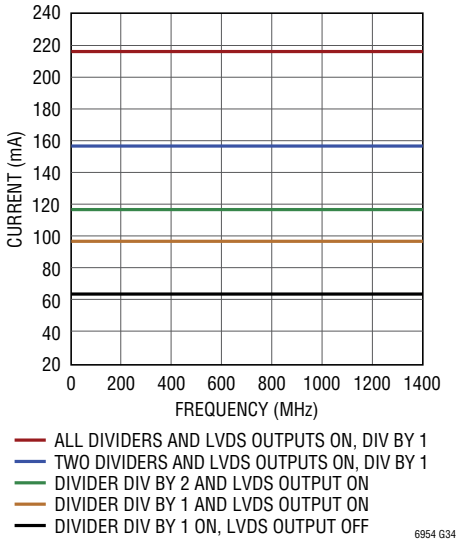

Supply Current vs Frequency, LVDS Output, I_{LVDS} = 7mA, R_{TERM} = 100Ω||100Ω (Differential)

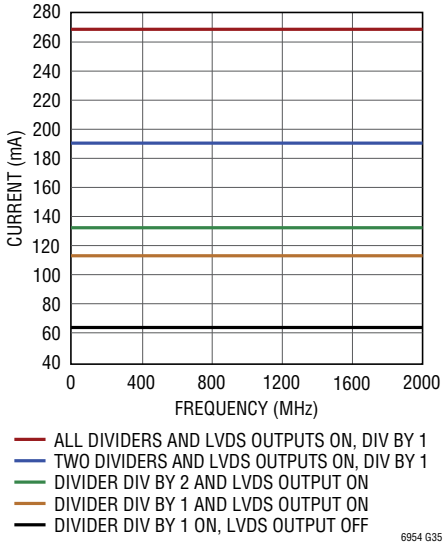

PIN FUNCTIONS

LTC6954

V_{OUT0}^+, V_{OUT1}^+, V_{OUT2}^+ (Pins 1, 4, 5, 8, 9, 12): Output Supply Voltages. The supply range is from 3.15V to 3.45V. This supply should be kept free of noise and ripple. The use of a low impedance power plane is recommended. All V_{OUTx}^+ pins must be connected to the same supply voltage as the V_A^+, V_D^+ and V_{IN}^+ pins. Each pin, or in some cases pin pairs, must be separately bypassed directly to GND with a 0.01µF ceramic capacitor as close to the pin as possible. Refer to the Applications Information section for more details on supply connections and bypassing.

GND (Pins 14, 26, 29, 32, 35): Ground Connections. Should be tied directly to the exposed pad (pin 37) and to a low impedance ground plane for best performance. Refer to the Applications Information section for more details on grounding for signal integrity and thermal considerations.

V_A^+ (Pins 15, 23, 24, 34): Analog Supply Voltages. The supply range is from 3.15V to 3.45V. This supply should be kept free of noise and ripple. The use of a low impedance power plane is recommended. All V_A^+ pins must be connected to the same supply voltage as the V_{OUTx}^+, V_D^+ and V_{IN}^+ pins. Each pin, or in some cases pin pairs, must be separately bypassed directly to GND with a 0.1µF ceramic capacitor as close to the pin as possible. Refer to the Applications Information section for more details on supply connections and bypassing.

$\overline{CS}$ (Pin 16): Serial Port Chip Select Input. This active LOW CMOS logic input initiates a serial port transaction when brought LOW. It finalizes the serial port transaction when brought HIGH after 16 serial port clock cycles. Refer to the Operation section for more details.

SDO (Pin 17): Serial Data Output. Data read from the serial port is presented on this CMOS logic pin. Refer to the Operation section for more details.

V_D^+ (Pins 18, 21): Digital Supply Voltages. The supply range is from 3.15V to 3.45V. This supply should be kept free of noise and ripple. The use of a low impedance power plane is recommended. All V_D^+ pins must be connected to the same supply voltage as the V_{OUTx}^+, V_A^+ and V_{IN}^+ pins. Each pin must be separately bypassed directly to GND with a 0.1µF ceramic capacitor as close to the pin as possible. Refer to the Applications Information section for more details on supply connections and bypassing.

SCLK (Pin 19): Serial Port Clock Input. This positive edge triggered CMOS logic input signal clocks serial port data in on the rising edge. Refer to the Operation section for more details.

SDI (Pin 20): Serial Port Data Input. Data written into the serial port is presented on this CMOS logic pin. Refer to the Operation section for more details.

SYNC (Pin 22): The Synchronization Input Pin. A rising edge on this CMOS logic input initiates an output clock synchronization sequence. Precision output synchronization of one or more parts is handled on-chip, so the timing of this signal is not critical. Refer to the Operation and the Applications Information sections for more details.

V_{IN}^+ (Pins 25, 30): Analog Supply Voltages. The supply range is from 3.15V to 3.45V. This supply should be kept free of noise and ripple. The use of a low impedance power plane is recommended. All V_{IN}^+ pins must be connected to the same supply voltage as the V_{OUTx}^+, V_A^+ and V_D^+ pins. Each pin must be separately bypassed directly to GND with a 0.1µF ceramic capacitor as close to the pin as possible. Refer to the Applications Information section for more details on supply connections and bypassing.

IN^+, IN^- (Pins 27, 28): The Signal Input Pins. The input signal can be either differential or single ended. It can be a sine wave, LVPECL logic, LVDS logic or CMOS logic. Refer to the Operation and Applications Information sections for more details on the correct use of the inputs.

TEMP (Pin 31): Temperature Monitoring Diode. This pin is connected to the anode of a diode that may be used to measure the die temperature, by forcing a current and measuring the voltage. Refer to the Applications Information section for more details on monitoring the die temperature.

GND (Exposed Pad Pin 37): Ground Connection. The package exposed pad must be soldered directly to the PCB land. The PCB land pattern should have multiple thermal vias to the ground plane for both low ground inductance and low thermal resistance. Refer to the Applications Information section for more details on grounding for signal integrity and thermal considerations.

PIN FUNCTIONS

LTC6954-1 OUTPUTS AND MODE SELECT

OUT0SEL (Pin 13): OUT0 Mode Select. Connecting this pin to the V_A^+ supply enables the internal, active biasing of the OUT0 output emitter followers. Connecting this pin to GND disables this internal bias circuit. Refer to the Operation and Applications Information sections for more details on the LVPECL internal bias.

OUT0⁻, OUT0⁺ (Pins 10, 11): LVPECL Output Pins. Differential logic outputs typically terminated by 50Ω connected to a supply 2V below the V_{OUT0}^+ supply. Refer to the Operation and Applications Information sections for more details.

OUT1SEL (Pin 33): OUT1 Mode Select. Connecting this pin to the V_A^+ supply enables the internal, active biasing of the OUT1 output emitter followers. Connecting this pin to GND disables this internal bias circuit. Refer to the Operation and Applications Information sections for more details on the LVPECL internal bias.

OUT1⁻, OUT1⁺ (Pins 6, 7): LVPECL Output Pins. Differential logic outputs typically terminated by 50Ω connected to a supply 2V below the V_{OUT1}^+ supply. Refer to the Operation and Applications Information sections for more details.

OUT2SEL (Pin 36): OUT2 Mode Select. Connecting this pin to the V_A^+ supply enables the internal, active biasing of the OUT2 output emitter followers. Connecting this pin to GND disables this internal bias circuit. Refer to the Operation and Applications Information sections for more details on the LVPECL internal bias.

OUT2⁻, OUT2⁺ (Pins 2, 3): LVPECL Output Pins. Differential logic outputs typically terminated by 50Ω connected to a supply 2V below the V_{OUT2}^+ supply. Refer to the Operation and Applications Information sections for more details.

LTC6954-2 OUTPUTS AND MODE SELECT

OUT0SEL (Pin 13): OUT0 Mode Select. Connecting this pin to the V_A^+ supply enables the internal, active biasing of the OUT0 output emitter followers. Connecting this pin to GND disables this internal bias circuit. Refer to the Operation and Applications Information sections for more details on the LVPECL internal bias.

OUT0⁻, OUT0⁺ (Pins 10, 11): LVPECL Output Pins. Differential logic outputs typically terminated by 50Ω connected to a supply 2V below the V_{OUT0}^+ supply. Refer to the Operation and Applications Information sections for more details.

OUT1SEL (Pin 33): OUT1 Mode Select. Connecting this pin to the V_A^+ supply enables the internal, active biasing of the OUT1 output emitter followers. Connecting this pin to GND disables this internal bias circuit. Refer to the Operation and Applications Information sections for more details on the LVPECL internal bias.

OUT1⁻, OUT1⁺ (Pins 6, 7): LVPECL Output Pins. Differential logic outputs typically terminated by 50Ω connected to a supply 2V below the V_{OUT1}^+ supply. Refer to the Operation and Applications Information sections for more details.

OUT2SEL (Pin 36): OUT2 Mode Select. Connecting this pin to ground configures OUT2 as a CMOS logic type output. Connecting this pin to the V_A^+ supply configures OUT2 as an LVDS logic type output.

OUT2⁻, OUT2⁺ (Pins 2, 3): LVDS/CMOS Output Pins. These outputs may be programmed as LVDS or CMOS outputs using the OUT2SEL pin. Refer to the Operation and the Applications Information sections for more details.

PIN FUNCTIONS

LTC6954-3 OUTPUTS AND MODE SELECT

OUT0SEL (Pin 13): OUT0 Mode Select. Connecting this pin to the V_A^+ supply enables the internal, active biasing of the OUT0 output emitter followers. Connecting this pin to GND disables this internal bias circuit. Refer to the Operation and Applications Information sections for more details on the LVPECL internal bias.

OUT0⁻, OUT0⁺ (Pins 10, 11): LVPECL Output Pins. Differential logic outputs typically terminated by 50Ω connected to a supply 2V below the V_{OUT0}^+ supply. Refer to the Operation and Applications Information sections for more details.

OUT1SEL (Pin 33): OUT1 Mode Select. Connecting this pin to GND configures OUT1 as a CMOS logic type output. Connecting this pin to the V_A^+ supply configures OUT1 as an LVDS logic type output.

OUT1⁻, OUT1⁺ (Pins 6, 7): LVDS/CMOS Output Pins. These outputs may be programmed as LVDS or CMOS outputs using the OUT1SEL pin. Refer to the Operation and the Applications Information sections for more details.

OUT2SEL (Pin 36): OUT2 Mode Select. Connecting this pin to GND configures OUT2 as a CMOS logic type output. Connecting this pin to the V_A^+ supply configures OUT2 as an LVDS logic type output.

OUT2⁻, OUT2⁺ (Pins 2, 3): LVDS/CMOS Output Pins. These outputs may be programmed as LVDS or CMOS outputs using the OUT2SEL pin. Refer to the Operation and the Applications Information sections for more details.

LTC6954-4 OUTPUTS AND MODE SELECT

OUT0SEL (Pin 13): OUT0 Mode Select. Connecting this pin to GND configures OUT0 as a CMOS logic type output. Connecting this pin to the V_A^+ supply configures OUT0 as an LVDS logic type output.

OUT0⁻, OUT0⁺ (Pins 10, 11): LVDS/CMOS Output Pins. These outputs may be programmed as LVDS or CMOS outputs using the OUT0SEL pin. Refer to the Operation and the Applications Information sections for more details.

OUT1SEL (Pin 33): OUT1 Mode Select. Connecting this pin to GND configures OUT1 as a CMOS logic type output. Connecting this pin to the V_A^+ supply configures OUT1 as an LVDS logic type output.

OUT1⁻, OUT1⁺ (Pins 6, 7): LVDS/CMOS Output Pins. These outputs may be programmed as LVDS or CMOS outputs using the OUT1SEL pin. Refer to the Operation and the Applications Information sections for more details.

OUT2SEL (Pin 36): OUT2 Mode Select. Connecting this pin to GND configures OUT2 as a CMOS logic type output. Connecting this pin to the V_A^+ supply configures OUT2 as an LVDS logic type output.

OUT2⁻, OUT2⁺ (Pins 2, 3): LVDS/CMOS Output Pins. These outputs may be programmed as LVDS or CMOS outputs using the OUT2SEL pin. Refer to the Operation and the Applications Information sections for more details.

BLOCK DIAGRAM

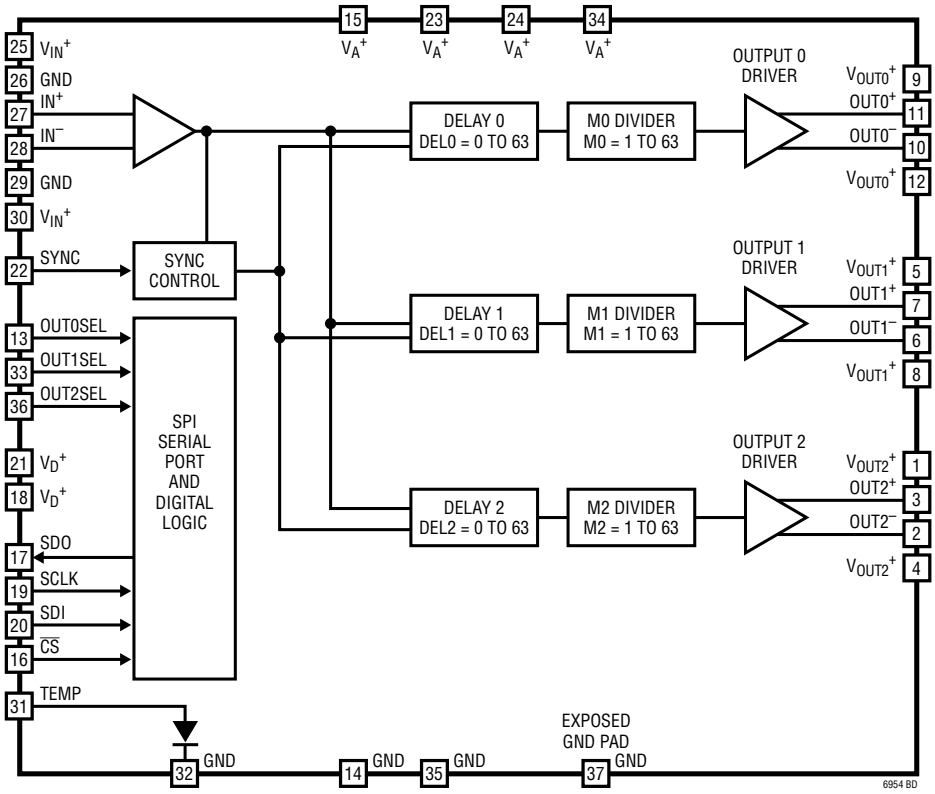

TIMING DIAGRAMS

Output Propagation Delays and Skews, Mx[5:0] = 1

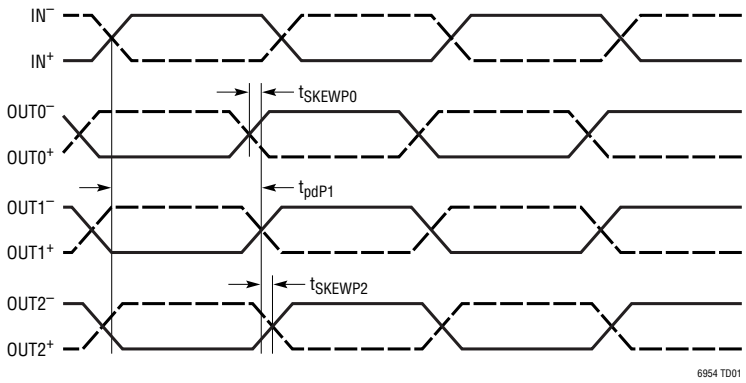

Differential LVDS Rise/Fall Times

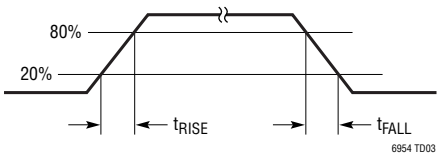

Differential LVPECL Rise/Fall Times

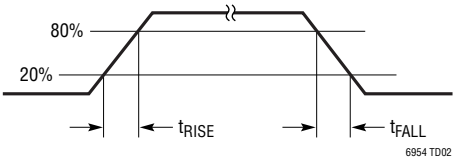

Single-Ended CMOS Rise/Fall Times

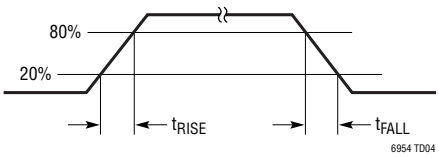

OPERATION

LTC6954 INTRODUCTION

The LTC6954 is a family of low phase noise clock distribution parts. Each part provides three outputs, each with programmable frequency divider and delay blocks. There are four members of the family differing in their output logic signal type:

LTC6954-1: Three LVPECL outputs

LTC6954-2: Two LVPECL and one LVDS/CMOS outputs

LTC6954-3: One LVPECL and two LVDS/CMOS outputs

LTC6954-4: Three LVDS/CMOS outputs

As shown in Figure 1, the LTC6954 consists of two distinct circuit sections: multioutput clock distribution and digital control.

The clock distribution section of the LTC6954 receives an input signal up to 1.4GHz (1.8GHz for the LTC6954-1 when DELx = 0) and delivers three output signals based on the input. The output signal logic type depends on the LTC6954 part version and the connection of the OUTxSEL output mode selection pins. Table 1 shows all four part versions, each version's available output types and the effect of OUTxSEL pin connection on the output.

The LVPECL logic outputs are capable of operation up to 1.4GHz (1.8GHz for the LTC6954-1 when DELx = 0). Connecting the OUTxSEL pin to the V_A^+ supply enables the internal, active biasing of the output emitter followers. Connecting this pin to GND disables this internal bias circuit.

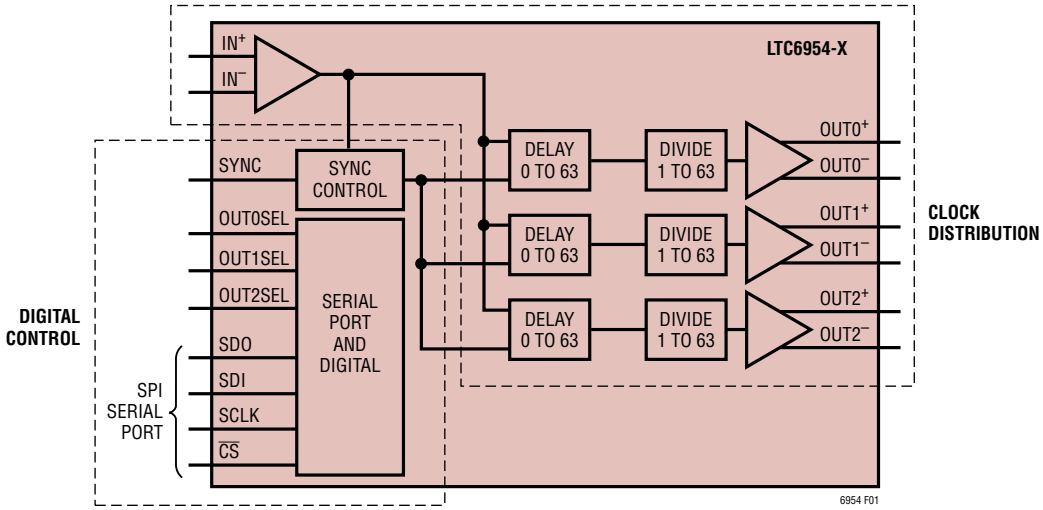

Figure 1. The LTC6954 Highlighting the Circuit Blocks

Table 1. LTC6954 Versions and Output Configurations

LTC6954 VERSION	OUTPUT 0		OUTPUT 1		OUTPUT 2	
	OUT0SEL = GND	OUT0SEL = V_A^+	OUT1SEL = GND	OUT1SEL = V_A^+	OUT2SEL = GND	OUT2SEL = V_A^+
LTC6954-1	LVPECL (IBIAS is Off)	LVPECL (IBIAS is On)	LVPECL (IBIAS is Off)	LVPECL (IBIAS is On)	LVPECL (IBIAS is Off)	LVPECL (IBIAS is On)
LTC6954-2	LVPECL (IBIAS is Off)	LVPECL (IBIAS is On)	LVPECL (IBIAS is Off)	LVPECL (IBIAS is On)	CMOS	LVDS
LTC6954-3	LVPECL (IBIAS is Off)	LVPECL (IBIAS is On)	CMOS	LVDS	CMOS	LVDS
LTC6954-4	CMOS	LVDS	CMOS	LVDS	CMOS	LVDS

Rev. A

OPERATION

The LVDS/CMOS output can be either a CMOS logic type or an LVDS logic type as configured by the OUTxSEL pin connection. Connecting the OUTxSEL pin to ground configures the output as a CMOS logic output capable of operation up to 250MHz. Connecting the OUTxSEL pin to the V_A^+ supply configures the output as an LVDS logic output capable of operation up to 800MHz for LVCSx set to 0 (far end line termination only), and up to 1400MHz for LVCSx set to 1 (doubly terminated). Refer to the Operation and Applications Information sections for more details.

Regardless of the LTC6954 part version and the output logic configuration, all three outputs are individually programmable to divide the input frequency by any integer from 1 to 63 and to delay any output by 0 to 63 input clock cycles. For an input signal with a 50% duty cycle, the output duty cycle will always be 50% regardless of the divide number.

The digital control section contains a full SPI-compatible serial control bus, the three output mode selection pins (OUT0SEL, OUT1SEL and OUT2SEL) and the EZSync clock synchronization (SYNC) function. Most device settings and operating modes are controlled through the SPI bus.

To minimize power consumption, many sections of the LTC6954 can be powered down when not in use. As shown in Figure 2, the LTC6954 can be used as an independent clock distribution part. Any unused outputs from the clock distribution section may be powered down.

Figure 3 highlights an LTC6950 driving the LTC6954. This example shows a single LTC6954 device, but each output from the LTC6950 can drive a separate LTC6954 device for support of up to five LTC6954 devices. The effortless-to-use EZSync multipart synchronization feature assures consistent edge alignment of all outputs from all devices. See the EZSync Clock Output Synchronization section for more details on EZSync operation.

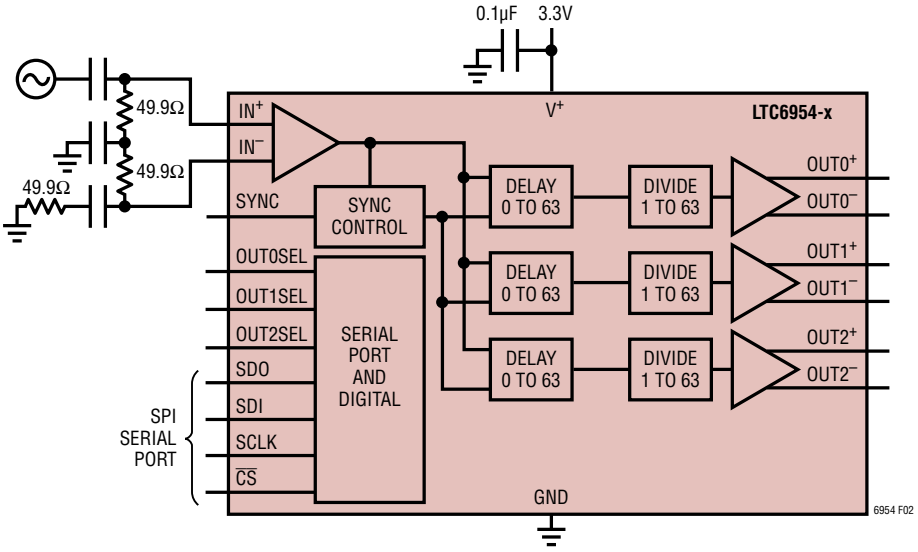

Figure 2. The LTC6954 Connected as an Independent Clock Distribution Part

OPERATION

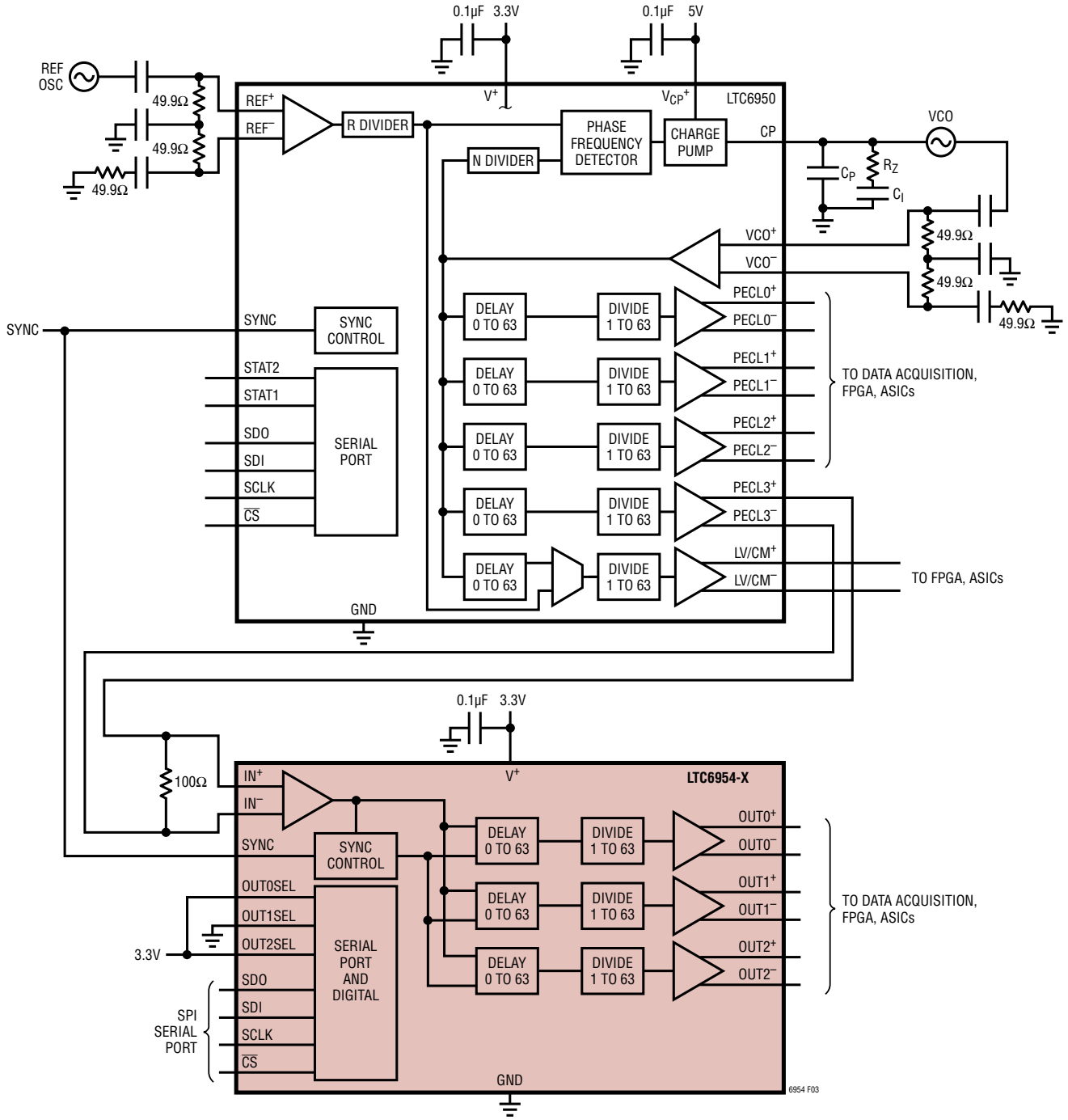

Figure 3. The LTC6950 in Controller Mode Clocking an LTC6954.
For Best Performance Use One of the LVPECL Outputs From the LTC6950 (with the IBIAS Enabled) to Clock the LTC6954. All Outputs From Both Devices Are Easily Synchronized by Applying a 1ms (Min) Wide Pulse on the SYNC Pins.

OPERATION

INPUT BUFFER

The LTC6954's input buffer (IN^+, IN^-) provides a flexible interface to either differential or single-ended frequency sources. The maximum input signal frequency is 1.4GHz (1.8GHz for the LTC6954-1 when DELx = 0). Differential signals may be applied directly to the input as long as the signal swing is less than $1.5V_{P-P}$ to avoid turning on the input protection diodes (see Figure 4).

It is also important that the $IN^{\pm}$ inputs be low noise and have a slew rate of at least 100V/µs. See the Applications Information section for more information on IN signal requirements and interfacing.

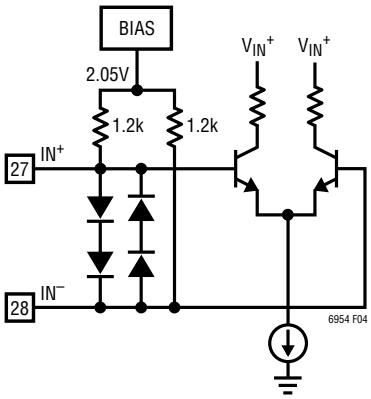

Figure 4. Simplified $IN^{\pm}$ Input Schematic

CLOCK DISTRIBUTION

The LTC6954 provides low noise clock distribution capability via three low skew distribution paths. Each distribution path includes an output divider, an input clock cycle delay block and an output driver. The output driver can be LVPECL, LVDS or CMOS compatible depending on which LTC6954 part is selected and the configuration of the corresponding OUTxSEL pin.

OUTPUT DIVIDER (M)

Each clock distribution path includes a 6-bit output (M) divider that reduces the input frequency by the programmed divide modulus, M. By programming the Mx[5:0] bits for each output divider, the divide modulus is set to any integer from 1 to 63, inclusive. Circuitry within the output divider ensures the output duty cycle will always be 50% for a programmed divide modulus greater than 1. When the output divider has been programmed for a divide modulus of 1 or 0, the output duty cycle will be the same as the input and the output divider is bypassed and powered down. See Table 2 for a summary of the registers containing the output divider control bits for each clock output distribution path. See Table 6, Serial Port Register Mapping, for complete register mapping information.

Table 2. Output (M) Divider Control Registers

CLOCK OUTPUT	DIVIDE MODULUS	BITS	REG ADDR (HEX)
OUT0	M0	[5:0]	h02
OUT1	M1	[5:0]	h04
OUT2	M2	[5:0]	h06

INPUT CLOCK CYCLE DELAY (DEL)

Each clock distribution path includes a 6-bit input cycle delay block, which is used in conjunction with the synchronization input pin, SYNC, to force phase alignments of the various clock outputs. When the SYNC input de-asserts, the delay block begins counting input clock cycles. When the count reaches the programmed configuration for each path, the output driver begins transitioning. To save power, the input cycle delay block powers down when all output phase alignments are complete.

The number of cycles of delay adjustment allowed for each output may be any integer from 0 to 63, inclusive, and is configured by enabling the specific delay block and then directly programming the number of delay cycles into the appropriate DELx[5:0] bits. Setting the SYNC_ENx bit to 1 enables each delay block. Alternatively, setting SYNC_ENx to 0 results in the selected cycle delay block being bypassed and powered down.

OPERATION

Because the input clock cycle delay block operates independently of the output divider block, the programmed cycle delay adjustment occurs regardless of the modulus setting of the output divider (see the example in Figure 5).

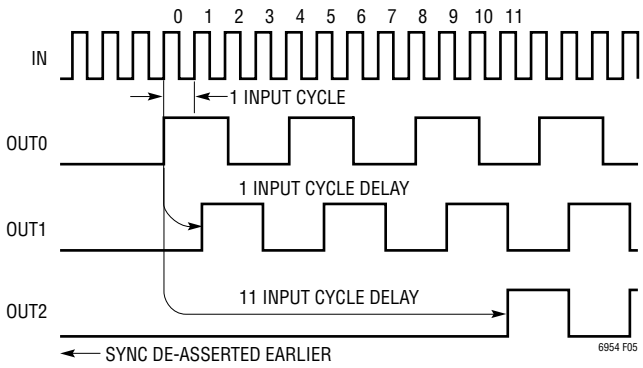

Figure 5. Input Clock Delay Operation (M0 = M1 = M2 = 4, DEL0 = 0, DEL1 = 1, DEL2 = 11)

Refer to the EZSync Clock Output Synchronization section for more information about using the SYNC input pin to achieve specific output phase alignments.

See Table 3 for a summary of the registers containing the output delay control bits for each clock output distribution path. For complete register mapping information, see Table 6, Serial Port Register Mapping.

Table 3. Output Delay (DEL) Control Registers

CLOCK OUTPUT	OUTPUT DELAY	BITS	SYNC ENABLE	BIT	REG ADDR (HEX)
OUT0	DEL0	[5:0]	SYNC_EN0	[7]	h01
OUT1	DEL1	[5:0]	SYNC_EN1	[7]	h03
OUT2	DEL2	[5:0]	SYNC_EN2	[7]	h05

LVDS/CMOS OUTPUT DRIVER

The LTC6954-2/LTC6954-3/LTC6954-4 have the capability to provide one or more LVDS or CMOS outputs. Connecting the corresponding output's OUTxSEL pin to V_A^+ enables LVDS compatible operation at frequencies up to 1.4GHz, while connecting it to GND configures two CMOS compatible output drivers with a maximum operating frequency of 250MHz.

When the output driver is configured for CMOS operation, programming the bit CMSINVx to 1 inverts the OUT^- relative to OUT^+. Setting CMSINVx to 0 results in both OUT^+ and OUT^- being in phase. See Table 4 for a summary of the registers containing the CMOS phase control bits for each clock output distribution path.

Table 4. CMOS Phase-Select Registers

CLOCK OUTPUT	BIT DESCRIPTOR	BIT	REG ADDR (HEX)
OUT0	CMSINV0	[6]	h01
OUT1	CMSINV1	[6]	h03
OUT2	CMSINV2	[6]	h05

When the output is configured for LVDS operation, the output driver can be further configured for different output current modes using the LVCSx bits. See Table 5 for a summary of the registers containing the LVDS current settings. The higher current setting is ideal for applications where the LVDS output driver is double-terminated. For example, if the LVDS output is terminated at the near end with a differential 100Ω resistor and at the far end with a differential 100Ω resistor, programming LVCS for 7mA operation will allow full LVDS swings. See the Applications Information section for LVDS and CMOS output driver interface circuits.

Table 5. LVDS Current Settings

CLOCK OUTPUT	BIT DESCRIPTOR	BIT	REG ADDR (HEX)	VALUE	I_{LVDS}	DIFFERENTIAL TERMINATION
OUT0	LVCS0	[6]	h02	0	3.5mA	100Ω
				1	7mA	50Ω (100Ω‖100Ω)
OUT1	LVCS1	[6]	h04	0	3.5mA	100Ω
				1	7mA	50Ω (100Ω‖100Ω)
OUT2	LVCS2	[6]	h06	0	3.5mA	100Ω
				1	7mA	50Ω (100Ω‖100Ω)

Rev. A

OPERATION

LVPECL OUTPUT DRIVER

The LTC6954-1/LTC6954-2/LTC6954-3 have the capability to provide one or more low noise, low skew LVPECL compatible output drivers depending on the part version selected. The output drivers are designed to operate at frequencies up to 1.4GHz (1.8GHz for the LTC6954-1 when DELx = 0). The outputs also provide considerable flexibility for biasing and termination. Internal biasing for the output emitter followers may be selected by setting the OUTxSEL pin to V_A^+ for the appropriate output driver block. See Figure 6 for a simplified schematic.

Enabling the internal bias will usually reduce the number of passive components required off-chip. In many cases, a single 100Ω differential termination at the far end is all that is required. In addition, more symmetrical rise/fall times may result from using the constant current internal bias.

Setting OUTxSEL to 0 disables the internal bias and allows the LVPECL output driver to be configured using standard LVPECL bias and termination networks. See the Applications Information section for more information about recommended bias and termination networks.

EZSync CLOCK OUTPUT SYNCHRONIZATION

The LTC6954 allows easy synchronization of the rising edges of clock outputs from a single independent part by simply pulsing the CMOS logic compatible SYNC input pin.

Multiple part synchronization is also easily achieved by driving the LTC6954's IN± input with one of Linear Technology's EZSync control mode capable drivers, such as the LTC6950. Using an EZSync control mode part as the driver, synchronization of its outputs and up to five LTC6954 parts is also as easy as pulsing the parts' SYNC input pins. There are no precision timing requirements for this pulse. The EZSync Controller part provides all of the precision timing.

SINGLE PART, INDEPENDENT SYNCHRONIZATION

To synchronize the rising edges of the outputs of a single, independent LTC6954, a CMOS logic pulse of at least 1ms duration is required on the SYNC input.

Each synchronized clock output should be sync-enabled, by programming its SYNC_ENx bit to 1. Programming an output to be sync-enabled results in that clock output being gated, or noncontinuous, during the synchronization process. Therefore, clock outputs that must not be disturbed (gated) during a synchronization operation should have their SYNC_ENx bits programmed to 0.

A synchronization operation is performed by forcing the SYNC input (Pin 22) to a logic HIGH for at least 1ms. The LTC6954 then retimes the SYNC input with respect to the

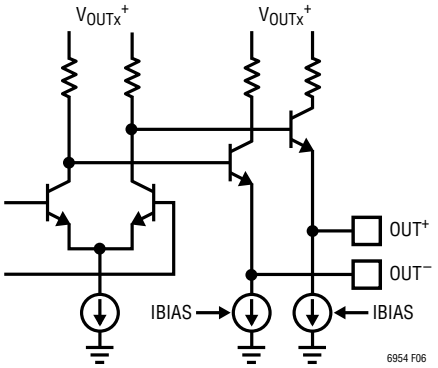

Figure 6. Simplified LVPECL Output Schematic

OPERATION

input signal to create an internal SYNC_RET signal, as shown in Figure 7. When SYNC_RET transitions HIGH, all sync-enabled clock outputs remain LOW once they transition to that state. Note that the LTC6954 has circuitry to prevent runt pulses, even during a synchronization operation, so the clock outputs only transition LOW when they would do so normally. Once the internal SYNC_RET signal transitions LOW, all sync-enabled outputs transition HIGH simultaneously, and the synchronization operation is complete.

By programming the delay bits, DELx[5:0], the LTC6954 may also provide clock outputs with phase relationships other than synchronized first rising edges. When DELx[5:0] are programmed, each sync-enabled output may be independently configured to wait up to 63 additional input clock cycles before rising, relative to the 0 delay case. For example, assuming the OUT0 and OUT1 outputs are both configured to divide by four, programming DEL0[5:0] to 0 and DEL1[5:0] to 1 allows the outputs to have a quadrature relationship once a synchronization operation completes (see Figure 8). To conserve power, the input cycle delay circuitry is turned off after a synchronization completes.

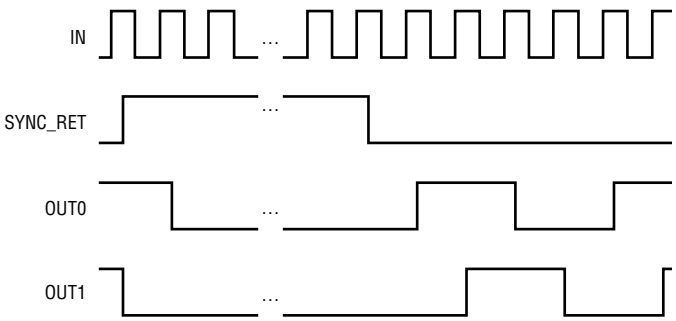

Figure 8. Synchronization to Obtain I/Q Clocks, SYNC_EN0 = SYNC_EN1 = 1, M0[5:0] = M1[5:0] = 4, DEL0[5:0] = 0, DEL1[5:0] = 1

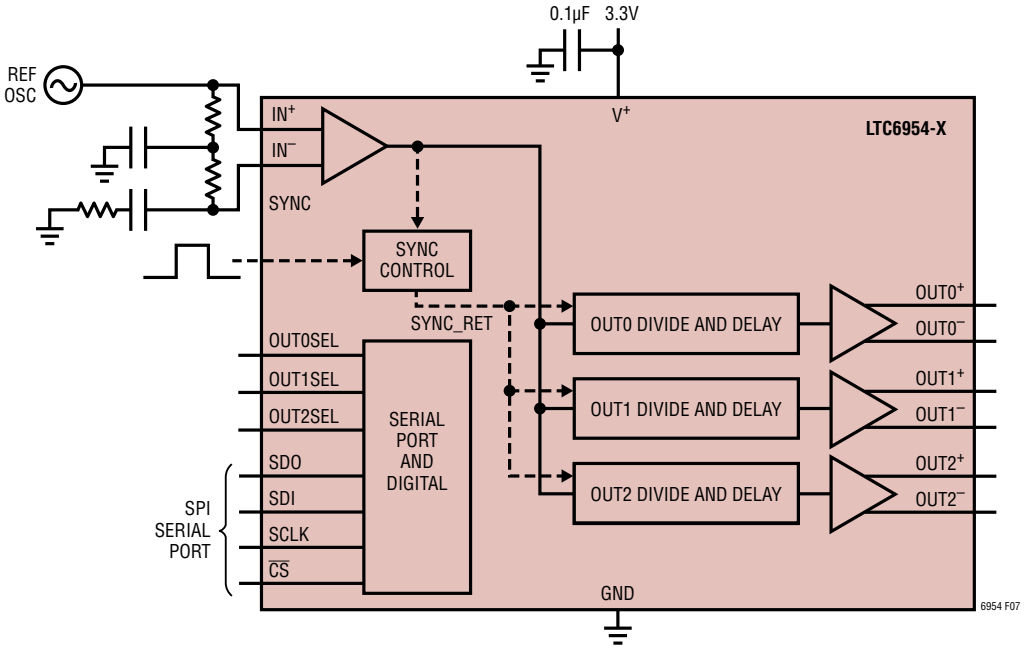

Figure 7. SYNC_RET Propagation

OPERATION

MULTIPLE PART SYNCHRONIZATION

Multiple LTC6954 parts may be easily configured to provide more synchronized outputs than are available on a single part provided that the parts are all driven by an EZSync controller part.

All parts being synchronized should share a common SYNC input, but there is no requirement for precise timing of this signal between the different parts. The only requirements are the skew of the SYNC pulse between the different parts is no greater than 10µs, and the SYNC pulse is at least 1ms in duration.

The general concept behind synchronizing multiple parts is to have one part as the EZSync "controller," while all other parts are "followers." The controller part controls the timing of all parts because it provides gated clock inputs to all follower parts. By providing an appropriate gated clock signal to each follower part, the controller ensures the outputs of all follower parts will have their first rising edge synchronized.

Furthermore, any output of the controller part not being used as a follower-driver may be configured to be follower-synchronous, which forces its output to have a first rising edge synchronized with all follower parts' outputs.

The LTC6954 is not capable of control mode operation. It can only be used as a follower. Parts such as the LTC6950 are capable of control or follow mode. With five outputs available, the LTC6950 can control and drive up to five follower devices. These followers may be additional LTC6950 parts, LTC6954 parts or any combination of each part.

The EZSync feature allows easy multipart synchronization of rising clock edges, so outputs of multiple parts will have a repeatable phase alignment. EZSync does not guarantee absolute time synchronization. That is, EZSync makes input cycle delay adjustments only, so any PCB trace delay from the controller to the follower, plus the propagation delay of the follower device, will be reflected as a delta in absolute time between the follower and controller when measured at their respective output pins.

The simplest configuration for synchronizing multiple EZSync compatible parts is shown in Figure 9. The LTC6950 has its SYNCMD[1:0] bits programmed to control mode. Because the PECL0 output of the LTC6950 is used as an input to the LTC6954, the LTC6950 should be configured to make that output a follower-driver, which is accomplished by programming FLDRV0 to 1.

To configure the PECL1, PECL2, PECL3 and LV/CM outputs of the LTC6950 as follower-synchronous, an internal VCO cycle delay cell must be enabled, which is accomplished by programming the FLDRV1, FLDRV2, FLDRV3 and FLDRV4 bits to 0. All outputs should have their SYNC_ENx bits programmed to 1 to allow synchronization. If there is an output which should not be disturbed (gated), program its SYNC_ENx bit to 0.

The example in Figure 9 makes an arbitrary choice of using the PECL0 differential outputs to drive the LVPECL compatible input of the LTC6954. Any of the outputs from the LTC6950 may be used as long as the appropriate FLDRVx bit is programmed to 1.

All LTC6954 outputs that are to be synchronized must have its SYNC_ENx bit programmed to 1. As noted earlier, if there is an output which should not be disturbed (gated), program its SYNC_ENx bit to 0.

OPERATION

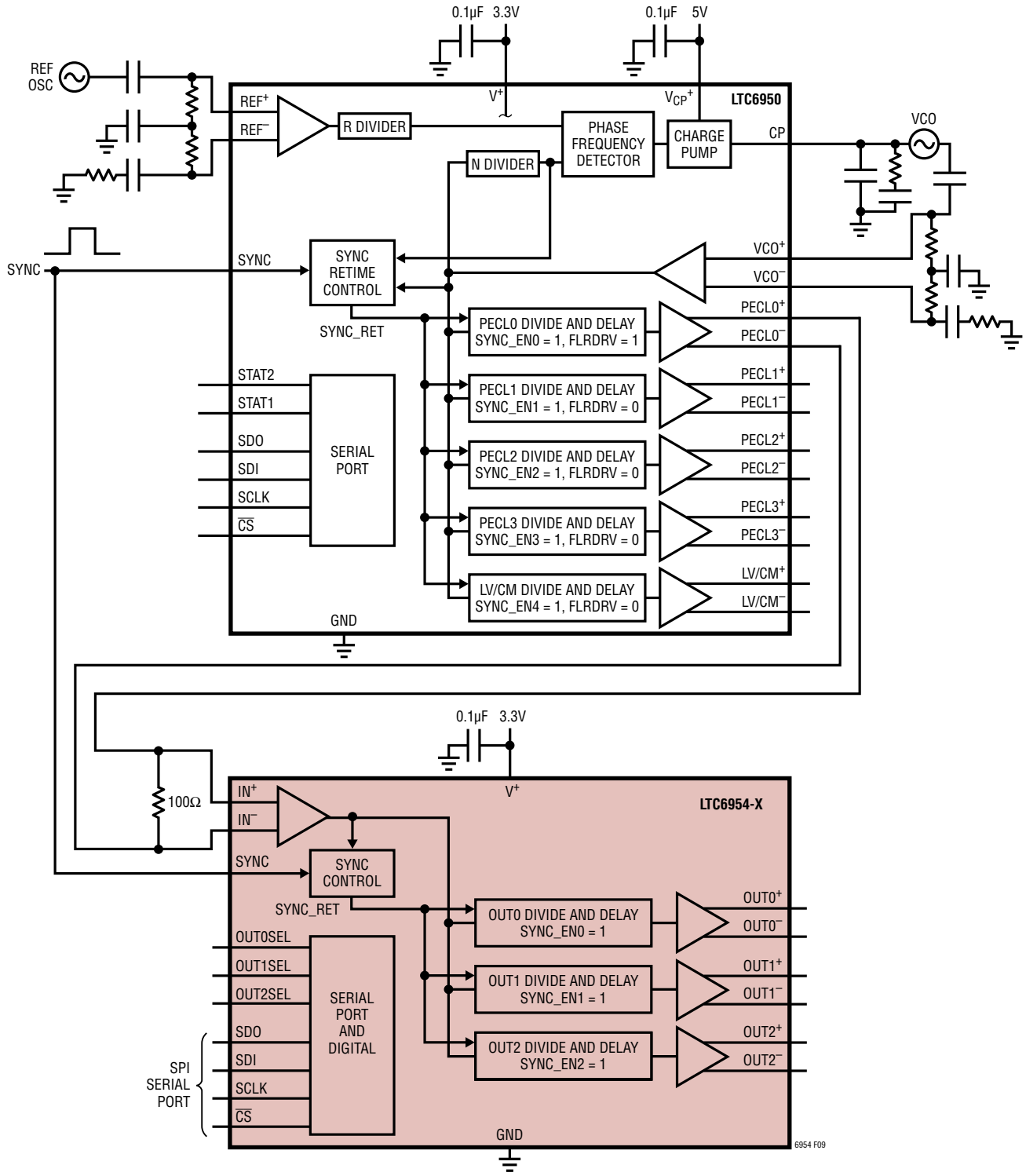

Figure 9. LTC6950 Controller Part Driving an LTC6954 Follower Part.
The PECL0 Output of the LTC6950 Drives the LTC6954 Input. All Other LTC6950 Outputs Are Programmed as Follower-Synchronous, Enabling All Seven Outputs to Be Rising Edge Synchronized

OPERATION

The timing diagram in Figure 10 illustrates multipart output synchronization of the circuit shown in Figure 9. The configurations of both the LTC6950 (controller) and the LTC6954 (follower) are as described in the preceding paragraphs. Figure 10 highlights that once the SYNC input transitions to a logic low, both outputs of the LTC6954 (LTC6954.OUT0 and LTC6954.OUT1) have their first rising edges aligned with each other, as well as with the follower-synchronous output of the LTC6950 (LTC6950.PECL1).

EZSync control mode parts have numerous timing details available including clock synchronization to not only the V_{CO} input, but also synchronization to the PLL's feedback N divider. This allows for synchronization to the reference frequency when the controller's PLL is locked. Consult the data sheet for the EZSync controller part (e.g., LTC6950) for the details of control mode operation.

As illustrated in Figure 9 and Figure 10, the EZSync feature allows a device configured in control mode to generate appropriately gated clock signals that guarantee all devices in follow mode will be synchronized with each other and with any follower-synchronous outputs of the controller, making multipart synchronization easy.

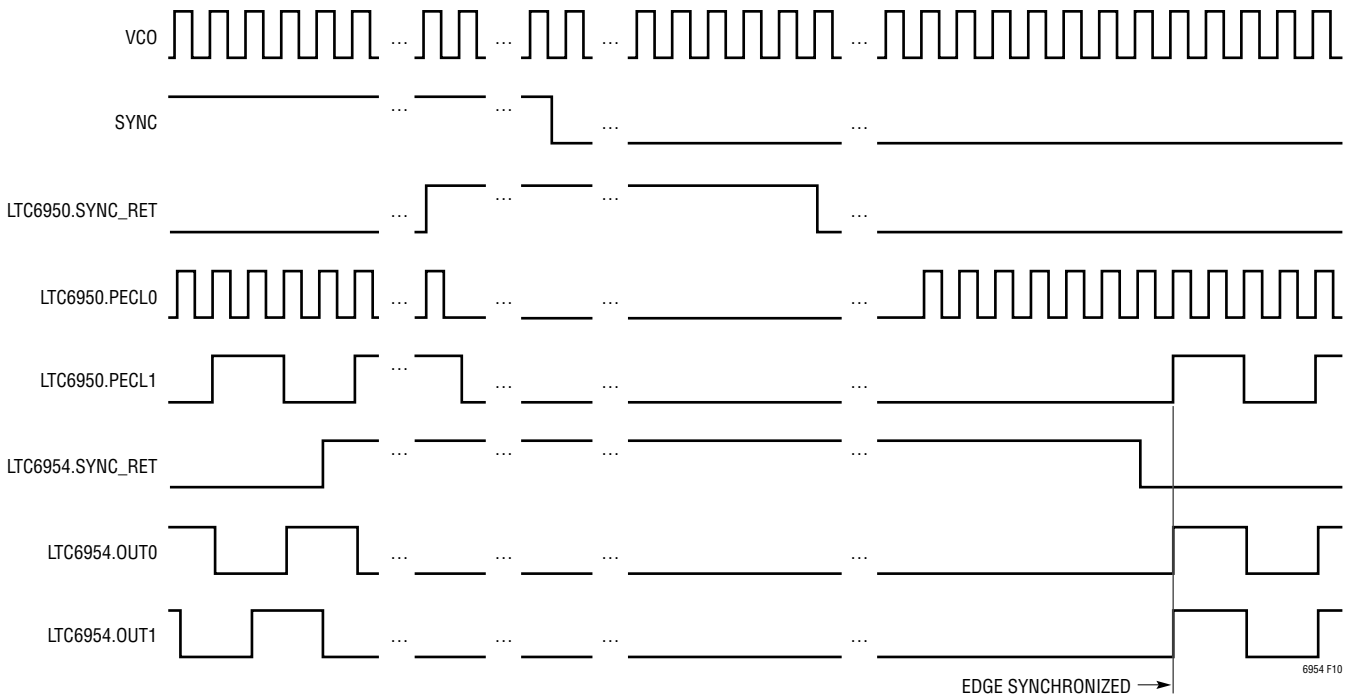

Figure 10. Timing Diagram of Circuit Shown in Figure 9 with Edge Synchronized Outputs Highlighted; LTC6950: M0[5:0] = 1, M1[5:0] = 4, DEL1[5:0] = 0, FLDRV0 = 1, FLDRV1 = 0, SYNC_EN0 = SYNC_EN1 = 1, LTC6954: M0[5:0] = 4, M1[5:0] = 4, DEL0[5:0] = DEL1[5:0] = 0, SYNC_EN0 = SYNC_EN1 = 1

OPERATION

SERIAL PORT

The LTC6954 SPI-compatible serial port provides chip control.

COMMUNICATION SEQUENCE

The serial bus is comprised of chip select ($\overline{CS}$), serial clock (SCLK), serial data input (SDI) and serial data output (SDO) signals. Data transfers to the LTC6954 are accomplished by the serial bus master device first taking $\overline{CS}$ LOW, which enables the LTC6954's serial port. Input data applied on SDI is clocked on the rising edge of SCLK, with most significant bits transferred first. The communication burst is terminated by the serial bus master device returning $\overline{CS}$ HIGH. See Figure 11 for details.

Data is read from the part during a communication burst using SDO. Read back may be multidrop (more than one LTC6954 connected in parallel on the serial bus), as SDO is set to a high impedance (Hi-Z) when $\overline{CS}$ is HIGH or when data is not being read from the part. If the LTC6954 is not used in a multidrop configuration, or if the serial port master is not capable of setting the SDO line level between read sequences, attaching a high value resistor of at least 200k between SDO and GND to ensure the line returns to a known level during Hi-Z states is highly recommended. See Figure 12 for details.

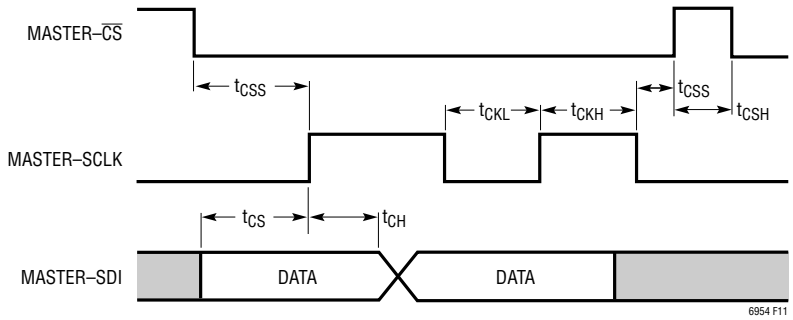

Figure 11. Serial Port Write Timing Diagram

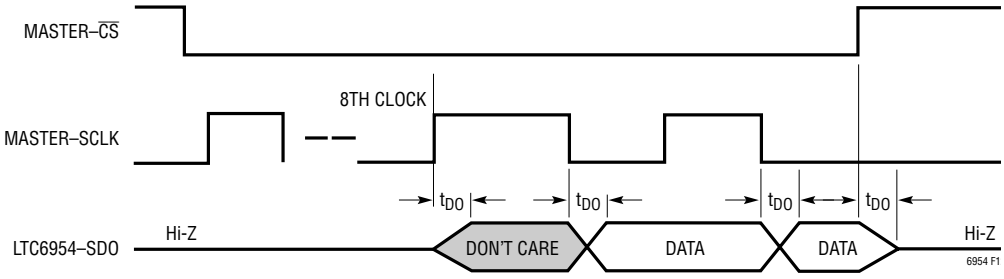

Figure 12. Serial Port Read Timing Diagram

OPERATION

SINGLE BYTE TRANSFERS

The serial port is arranged in a straightforward memory map, with status and control available in eight byte-wide registers. All data bursts are comprised of at least two bytes. The seven most significant bits (MSB) of the first byte are the register address, with a least significant bit (LSB) of 1 indicating a read from the part, and an LSB of 0 indicating a write to the part. The subsequent byte, or bytes, is data from/to the specified register address. See Figure 13 for an example of a detailed write sequence, and Figure 14 for a read sequence.

Figure 15 shows an example of two write communication bursts. The first communication burst from the serial bus master device contains a first byte of data on SDI that includes the 7-bit destination register address (Addr0) and an LSB of 0 indicating a write operation. The second byte on SDI is the data to be written into address Addr0. To terminate the first communication burst, $\overline{CS}$ is taken HIGH.

The second communication burst is structured the same way as the first. The first byte on SDI contains a 7-bit destination register address (Addr1) and an LSB of 0 to indicate a write operation. The next byte on SDI is the data intended for the register at address Addr1. And finally, the transfer is terminated by taking $\overline{CS}$ HIGH.

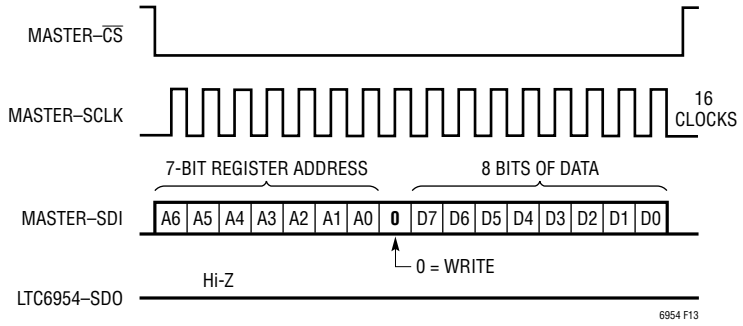

Figure 13. Serial Port Write Sequence

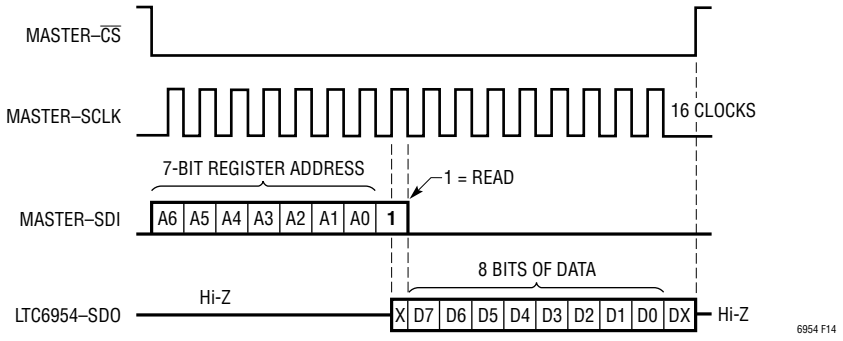

Figure 14. Serial Port Read Sequence

OPERATION

MULTIPLE BYTE TRANSFERS

More efficient data transfer of multiple bytes is accomplished by using the LTC6954's register address auto-increment feature, as shown in Figure 16. Like Figure 15, Figure 16 shows the serial bus master device sending the destination register address and an LSB of 0 in the first byte, followed by a second byte of data for that destination register. But instead of terminating the burst by taking $\overline{CS}$ back HIGH, the serial port master device continues sending bytes destined for subsequent registers. Byte 1's destination address is Addr0+1, Byte 2's destination address is Addr0+2 and so on. If the register address pointer attempts to increment past 7 (h07), it is automatically reset to 0.

An example of an auto-increment read from the part is shown in Figure 17. The first byte of the burst from the serial bus master device contains the 7-bit destination register address (Addr0) and an LSB of 1 to indicate a read operation. Once the LTC6954 detects a read burst, it takes SDO out of the Hi-Z condition and begins to send data bytes sequentially, starting with data from register Addr0. The part ignores all other data on SDI until the burst is terminated by taking $\overline{CS}$ HIGH.

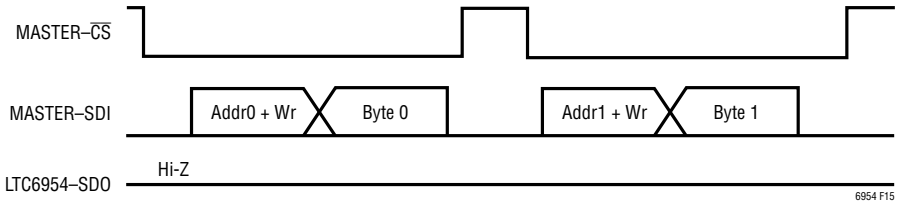

Figure 15. Serial Port Single Byte Write

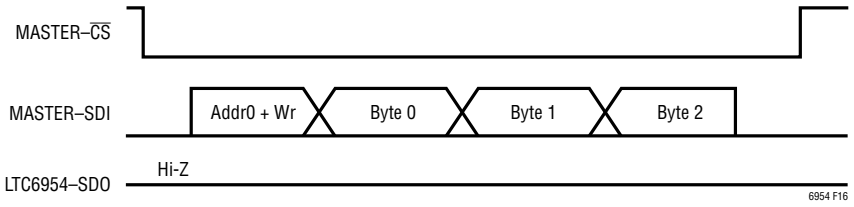

Figure 16. Serial Port Auto-Increment Write

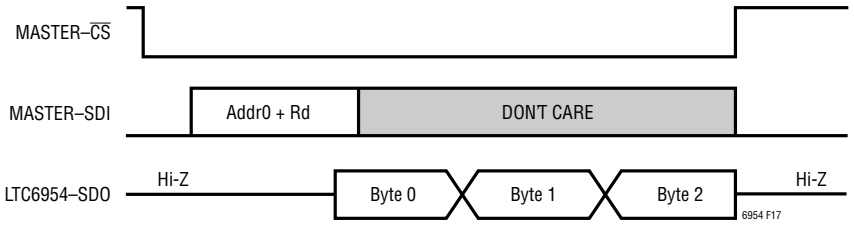

Figure 17. Serial Port Auto-Increment Read

OPERATION

MULTIDROP CONFIGURATION

Several LTC6954's may share the serial bus. In this multidrop configuration SCLK, SDI and SDO are common between all parts. The serial bus master must use a separate $\overline{CS}$ for each LTC6954 and ensure that only one device has $\overline{CS}$ asserted at any time. It is recommended to attach a high value resistor from SDO to GND to ensure the line returns to a known level during Hi-Z states.

SERIAL PORT REGISTERS

The LTC6954's memory map is shown in Table 6. Detailed bit descriptions are shown in Table 8.

BLOCK POWER-DOWN

The LTC6954 provides considerable flexibility to power down unused blocks. A summary of power-down bits is shown in Table 7. To determine the power savings in shutting down a particular section, consult the Supply Current Delta area of the Electrical Characteristics section.

As noted earlier, to achieve maximum power savings when an LVPECL output is unused and powered down, it is recommended that no terminations or other bias circuitry be connected to the output driver pins.

Table 7. Block Power-Down Descriptions

BIT NAME	DESCRIPTION
PDALL	Power-Down Whole Chip
PD_OUT2	Power-Down OUT2 Output Driver
PD_DIV2	Power-Down OUT2 Output Driver and Output Divider
PD_OUT1	Power-Down OUT1 Output Driver
PD_DIV1	Power-Down OUT1 Output Driver and Output Divider
PD_OUT0	Power-Down OUT0 Output Driver
PD_DIV0	Power-Down OUT0 Output Driver and Output Divider

Table 6. LTC6954 Serial Port Register Mapping

ADDR (HEX)	[7] MSB	[6]	[5]	[4]	[3]	[2]	[1]	[0] LSB	R/W	DEFAULT (HEX)
h00	*	PDALL	PD_OUT2	PD_DIV2	PD_OUT1	PD_DIV1	PD_OUT0	PD_DIV0	R/W	h00
h01	SYNC_EN0	CMSINV0	DEL0[5]	DEL0[4]	DEL0[3]	DEL0[2]	DEL0[1]	DEL0[0]	R/W	hC0
h02	*	LVCS0	M0[5]	M0[4]	M0[3]	M0[2]	M0[1]	M0[0]	R/W	h02
h03	SYNC_EN1	CMSINV1	DEL1[5]	DEL1[4]	DEL1[3]	DEL1[2]	DEL1[1]	DEL1[0]	R/W	hC0
h04	*	LVCS1	M1[5]	M1[4]	M1[3]	M1[2]	M1[1]	M1[0]	R/W	h04
h05	SYNC_EN2	CMSINV2	DEL2[5]	DEL2[4]	DEL2[3]	DEL2[2]	DEL2[1]	DEL2[0]	R/W	hC0
h06	*	LVCS2	M2[5]	M2[4]	M2[3]	M2[2]	M2[1]	M2[0]	R/W	h08
h07	REV2	REV1	REV0	PART4	PART3	PART2	PART1	PART0	R	h2X

*Unused

OPERATION

Table 8. Serial Port Register Bit Descriptions

NAME	DESCRIPTION	REG ADDR (HEX)	BIT(s)	DEFAULT VALUE (b: BINARY h: HEX)
CMSINV0	CMOS Output Phase Relationship on OUT0. IF CMSINV0 = 0, Then OUT0$^+$ and OUT0$^-$ Are In-Phase; If CMSINV0 = 1, Then OUT0$^+$ and OUT0$^-$ Are Inverted Relative to the Other. Ignore if Configured for LVPECL or LVDS.	h01[6]	R/W	b1
CMSINV1	CMOS Output Phase Relationship on OUT1. IF CMSINV1 = 0, Then OUT1+ and OUT1$^-$ Are In-Phase; If CMSINV1 = 1, Then OUT1+ and OUT1$^-$ Are Inverted Relative to the Other. Ignore if Configured for LVPECL or LVDS.	h03[6]	R/W	b1
CMSINV2	CMOS Output Phase Relationship on OUT2; IF CMSINV2 = 0, Then OUT2+ and OUT2$^-$ Are In-Phase; If CMSINV2 = 1, Then OUT2+ and OUT2$^-$ Are Inverted Relative to the Other. Ignore if Configured for LVPECL or LVDS.	h05[6]	R/W	b1
DEL0[5:0]	Sets the OUT0 Delay Value, 0 ≤ DEL0[5:0] ≤ 63 Input Clock Cycles.	h01[5:0]	R/W	h00
DEL1[5:0]	Sets the OUT1 Delay Value, 0 ≤ DEL1[5:0] ≤ 63 Input Clock Cycles.	h03[5:0]	R/W	h00
DEL2[5:0]	Sets the OUT2 Delay Value, 0 ≤ DEL2[5:0] ≤ 63 Input Clock Cycles.	h05[5:0]	R/W	h00
LVCS0	Sets the LVDS Output Current for OUT0, (0 = 3.5mA,1 = 7mA). Ignore if the Output Is LVPECL or CMOS.	h02[6]	R/W	b0
LVCS1	Sets the LVDS Output Current for OUT1, (0 = 3.5mA,1 = 7mA). Ignore if the Output Is LVPECL or CMOS.	h04[6]	R/W	b0
LVCS2	Sets the LVDS Output Current for OUT2, (0 = 3.5mA,1 = 7mA). Ignore if the Output Is LVPECL or CMOS.	h06[6]	R/W	b0
M0[5:0]	M0[5:0] Sets the OUT0 Output Divider Modulus to Any Integer From 1 to 63. Programming M0[5:0] to a Value of Hex 0 or 1 Results in a Divide Modulus of 1.	h02[5:0]	R/W	h02
M1[5:0]	M1[5:0] Sets the OUT1 Output Divider Modulus to Any Integer From 1 to 63. Programming M1[5:0] to a Value of Hex 0 or 1 Results in a Divide Modulus of 1.	h04[5:0]	R/W	h04
M2[5:0]	M2[5:0] Sets the OUT2 Output Divider Modulus to Any Integer From 1 to 63. Programming M2[5:0] to a Value of Hex 0 or 1 Results in a Divide Modulus of 1.	h06[5:0]	R/W	h08
PART[4:0]	Part code (h00 = LTC6954-1, h01 = LTC6954-2, h02 = LTC6954-3, h03 = LTC6954-4).	h07[4:0]	R	
PDALL	For PDALL = 1, the Full Chip Is Powered Down.	h00[6]	R/W	b0
PD_DIV0	For PD_DIV0 = 1, the OUT0 Divider and the Output Buffer Is Powered Down.	h00[0]	R/W	b0
PD_DIV1	For PD_DIV1 = 1, the OUT1 Divider and the Output Buffer Is Powered Down.	h00[2]	R/W	b0
PD_DIV2	For PD_DIV2 = 1, the OUT2 Divider and the Output Buffer Is Powered Down.	h00[4]	R/W	b0
PD_OUT0	For PD_OUT0 = 1, the OUT0 Output Buffer Is Powered Down.	h00[1]	R/W	b0
PD_OUT1	For PD_OUT1 = 1, the OUT1 Output Buffer Is Powered Down.	h00[3]	R/W	b0
PD_OUT2	For PD_OUT2 = 1, the OUT2 Output Buffer Is Powered Down.	h00[5]	R/W	b0
REV[2:0]	Part Revision Code.	h07[7:5]	R	b001
SYNC_EN0	For SYNC_EN0 = 1, the OUT0 Output Will Synchronize to the Clock Input During the SYNC Procedure. If SYNC_EN0 = 0, Then the OUT0 Output Ignores the Input to the SYNC Pin.	h01[7]	R/W	b1
SYNC_EN1	For SYNC_EN1 = 1, the OUT1 Output Will Synchronize to the Clock Input During the SYNC Procedure. If SYNC_EN1 = 0, Then the OUT1 Output Ignores the Input to the SYNC Pin.	h03[7]	R/W	b1
SYNC_EN2	For SYNC_EN2 = 1, the OUT2 Output Will Synchronize to the Clock Input During the SYNC Procedure. If SYNC_EN2 = 0, Then the OUT2 Output Ignores the Input to the SYNC Pin.	h05[7]	R/W	b1

APPLICATIONS INFORMATION

I/O INTERFACE

The LTC6954 is a high performance clock distribution chip. To achieve the best performance, it is important to select the proper circuitry to interface to the high frequency, low noise inputs and outputs.

INPUT BUFFER

The LTC6954 provides a flexible interface to either differential or single-ended frequency sources. The maximum input signal frequency is 1.4GHz (1.8GHz for the LTC6954-1 when DELx = 0). Any signal source may be directly coupled (DC) to the LTC6954, as long as its signal swing is less than $1.5V_{P-P}$ and its common mode voltage is approximately the self-bias voltage of the input buffer (see Figure 18). If the input signal is too large, it should be attenuated to avoid turning on the input protection diodes. If the common mode voltage is too high or low, the signal must be level shifted or AC-coupled.

To achieve the best noise performance, it is important that the input frequency source have low phase noise and a slew rate of at least 100V/µs. Additionally, the input signal transmission line should be terminated as close to the input pins as possible to minimize reflections. Refer to the Electrical Characteristics table for the specified input impedance of the LTC6954.

Common signals that may be DC-coupled into the LTC6954's input include 2.5V CML and 3.3V LVPECL. Common signals that must be AC-coupled into the LTC6954's input include 3.3V CML, LVDS, CMOS and RF style, 50Ω output sine wave oscillators (<7.5dBm signal). 2.5V CML and 3.3V LVPECL signals may optionally be AC-coupled if system design considerations require it. Figure 19 shows many common IN± input signal interfaces. Note that all signal traces are assumed to be 50Ω transmission lines.

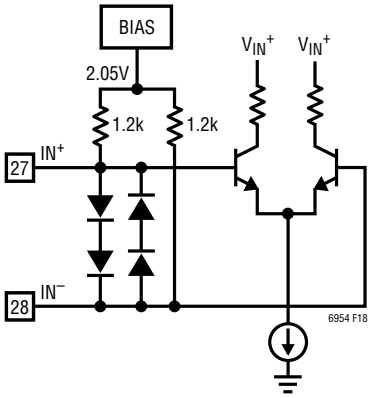

Figure 18. Simplified IN Input Schematic

APPLICATIONS INFORMATION

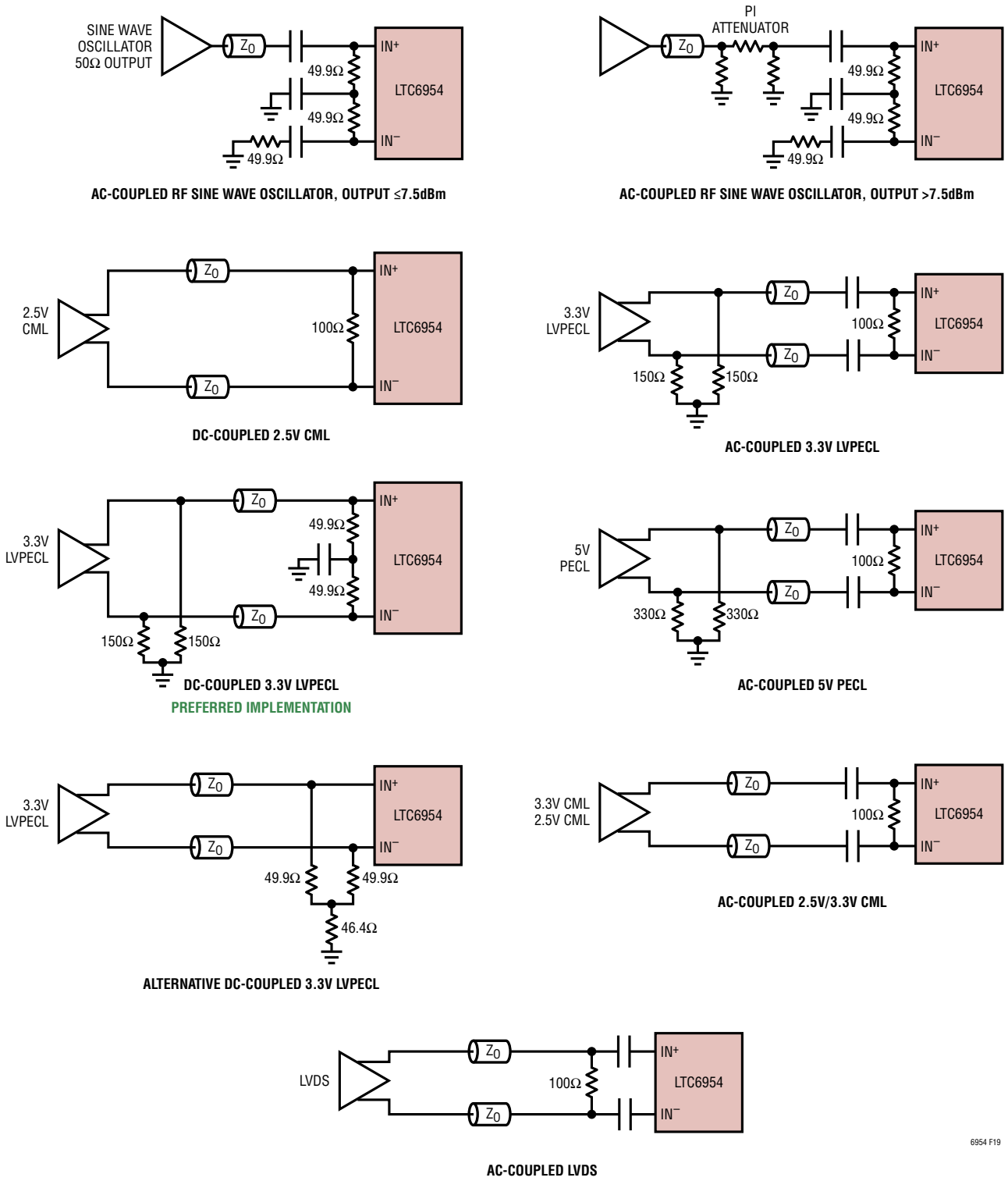

Figure 19. Common IN± Input Interface Configurations.
All Z_0 Signal Traces Are 50Ω Transmission Lines. All Capacitors Are 0.1µF. All Resistors and Capacitors Are Placed as Close as Possible to the Driver or Receiver with the Transmission Line in Between

APPLICATIONS INFORMATION

LVPECL OUTPUTS (LTC6954-1/LTC6954-2/LTC6954-3)

The LTC6954 provides up to three low noise, low skew LVPECL compatible output drivers designed for frequencies up to 1.4GHz (1.8GHz for the LTC6954-1 when DELx = 0). Refer to Table 9 For the output configurations available. The output driver provides considerable flexibility for biasing and termination. Refer to Figure 20 for a simplified schematic of the LVPECL output.

The output driver can be biased internally by setting the appropriate OUTxSEL HIGH. Using the internal bias is ideal for AC-coupling applications as it replaces the need for a 150Ω resistor to ground to provide the necessary bias for each output. It is also useful when the receiving chip can handle 3.3V LVPECL inputs directly, then only a 100Ω differential resistor located near the receiver input is required for proper transmission line termination.

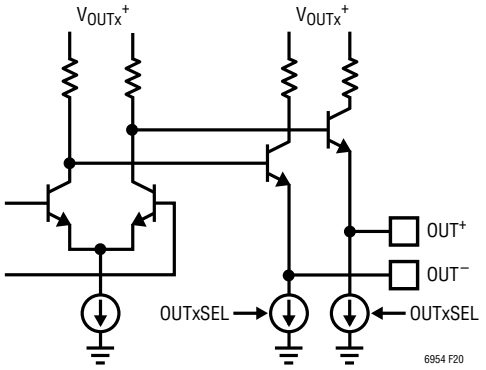

Figure 20. Simplified LVPECL Output Schematic

Disabling the internal bias, by connecting OUTxSEL to GND, allows the LVPECL output driver to be configured using standard LVPECL bias and termination networks.

The LTC6954 allows powering down of many blocks, including the LVPECL output drivers. When an LVPECL output driver is powered down, the output pins will float to approximately 0.8V below V_{OUTx}^+. Depending on the external bias and termination circuits connected to the LVPECL output pins, the output driver may actually source current in this mode. To achieve maximum power savings, it is recommended that no terminations or other bias circuitry be connected to an unused LVPECL output that will be powered down. Additionally, if the output is expected to be turned on and off, using the internal IBIAS with the single 100 differential termination configuration gives the lowest power consumption in the powered down state.

The LVPECL outputs are emitter followers and thus have a low output impedance. LVPECL output signals also have very fast rise and fall times. To maintain proper signal integrity (sharp rise and fall times with minimal ringing), route signals with well controlled transmission lines with proper far-end termination. In cases where the full LVPECL signal swing is not required, consider using a series resistor to provide additional near-end transmission line termination. With both near- and far-end termination, manufacturing variations of the transmission lines in production are more easily tolerated. This configuration is also recommended for driving ADCs as discussed in the “Using the LTC6954 to Clock ADC Sample Clock Inputs” section.

Table 9. LTC6954 OUTPUT Configuration with LVPECL Outputs Highlighted

LTC6954 VERSION	OUTPUT 0		OUTPUT 1		OUTPUT 2	
	OUT0SEL = GND	OUT0SEL = V_A^+	OUT1SEL = GND	OUT1SEL = V_A^+	OUT2SEL = GND	OUT2SEL = V_A^+
LTC6954-1	**LVPECL** (IBIAS is Off)	**LVPECL** (IBIAS is On)	**LVPECL** (IBIAS is Off)	**LVPECL** (IBIAS is On)	**LVPECL** (IBIAS is Off)	**LVPECL** (IBIAS is On)
LTC6954-2	**LVPECL** (IBIAS is Off)	**LVPECL** (IBIAS is On)	**LVPECL** (IBIAS is Off)	**LVPECL** (IBIAS is On)	CMOS	LVDS
LTC6954-3	**LVPECL** (IBIAS is Off)	**LVPECL** (IBIAS is On)	CMOS	LVDS	CMOS	LVDS
LTC6954-4	CMOS	LVDS	CMOS	LVDS	CMOS	LVDS

APPLICATIONS INFORMATION

Figure 21 shows how to interface the LVPECL outputs to many typical input receivers. Driving an LVDS input is a somewhat special case. Most LVDS inputs are designed to accept a wide range of input signal swings and common mode levels. For many LVDS inputs, a simple connection is fine. For LVDS inputs operating on a lower power supply voltage, a 1.2V common mode level is required. This requirement is easily met by using a few resistors to level-shift the signal from 1.85V down to 1.2V. In this configuration, the signal's peak-to-peak amplitude is also reduced, but the LVPECL signal is much larger than the LVDS signal (1600mV$_{P-PDIFF}$ vs 750mV$_{P-PDIFF}$) so the signal at the LVDS receiver is at the correct level for both the common mode level and the voltage swing. As a side benefit, this configuration also provides both near and far-end transmission line termination.

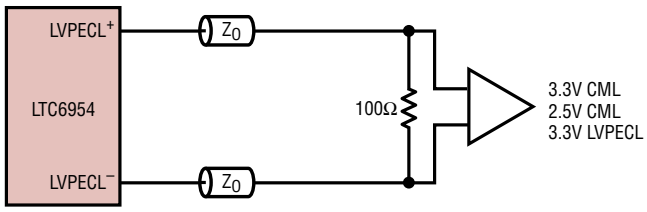

DC-COUPLED INTO A 2.5V/3.3V CML, 3.3V LVPECL (LVPECL INTERNAL IBIAS ENABLED)

PREFERRED IMPLEMENTATION

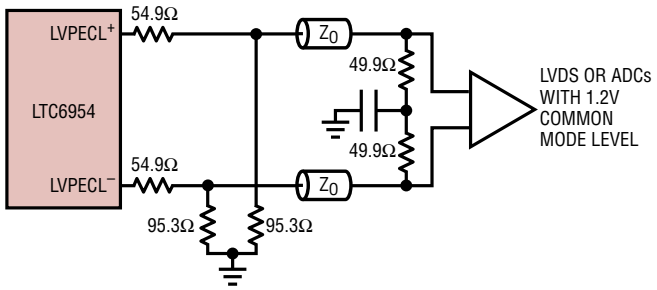

DC-COUPLED INTO AN LVDS OR AN ADC WITH A 1.2V COMMON MODE LEVEL (LVPECL INTERNAL IBIAS DISABLED)

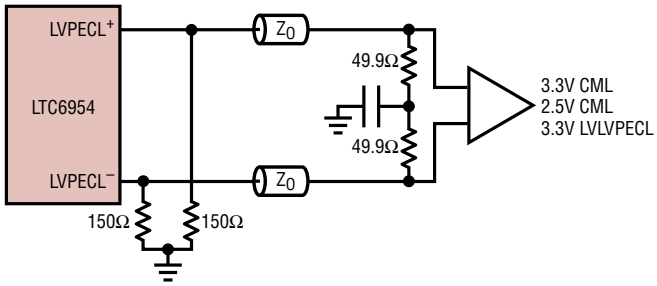

DC-COUPLED INTO A 2.5V/3.3V CML, 3.3V LVPECL (LVPECL INTERNAL IBIAS DISABLED)

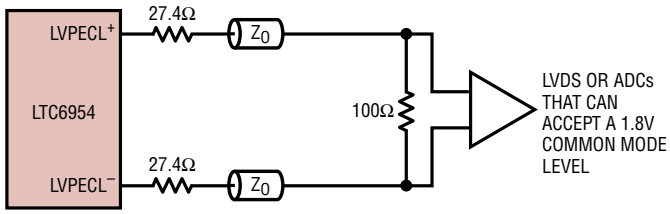

BACK TERMINATED DC-COUPLED INTO AN ADC THAT CAN ACCEPT A 1.85V COMMON MODE LEVEL (LVPECL INTERNAL IBIAS ENABLED)

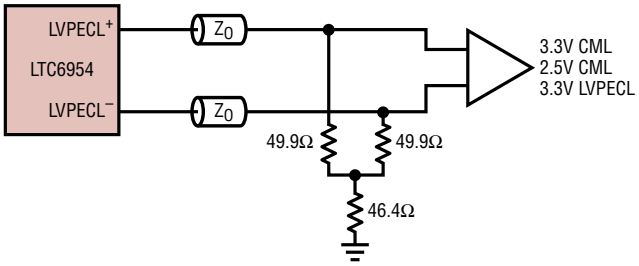

ALTERNATIVE DC-COUPLED INTO A 2.5V/3.3V CML, 3.3V LVPECL (LVPECL INTERNAL IBIAS DISABLED)

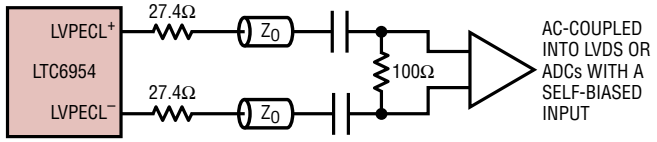

AC-COUPLED INTO AN LVDS OR AN ADC WITH A SELF-BIASED INPUT (LVPECL INTERNAL IBIAS ENABLED)

6954 F21

Figure 21. Common LVPECL Output Interface Configurations.
All Z_0 Signal Traces Are 50Ω Transmission Lines. All Capacitors Are 0.1µF. All Resistors and Capacitors Are Placed as Close as Possible to the Driver or Receiver with the Transmission Line in Between

APPLICATIONS INFORMATION

LVDS/CMOS OUTPUTS (LTC6954-2/LTC6954-3/ LTC6954-4)

The LTC6954-2/LTC6954-3/LTC6954-4 have the capability to provide one or more LVDS or CMOS outputs. See Figure 22 and Figure 23 for simplified schematics of this output. Connecting the corresponding output's OUTxSEL pin to V_A^+ enables LVDS compatible operation at frequencies up to 1.4GHz, while connecting it to GND configures two CMOS compatible output drivers with a maximum operating frequency of 250MHz. Table 10 shows the part versions with LVDS/CMOS outputs and the available OUTxSEL configurations.

LVDS OUTPUT MODE (OUTxSEL = V_A^+)

When the output is configured for LVDS operation, the output current has two settings controlled by the LVCS bit, as shown in Table 11. LVCSx = 0 supplies current for 100Ω differential termination and has a maximum operating frequency of 800MHz. The termination resistor should be located near the receiver input to reduce signal reflections.

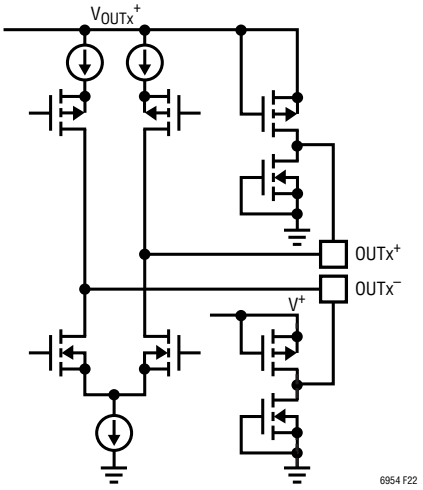

Figure 22. Simplified LVDS/CMOS Output Schematic (LVDS Mode, CMOS Circuit Shutdown)

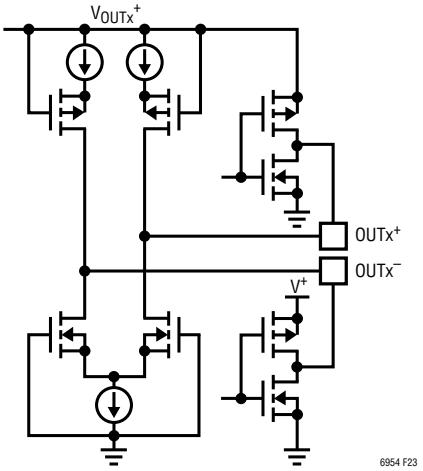

Figure 23. Simplified LVDS/CMOS Output Schematic (CMOS Mode, LVDS Circuit Shutdown)

Table 10. LTC6954 Output Configuration with LVDS/CMOS Outputs Highlighted

LTC6954 VERSION	OUTPUT 0		OUTPUT 1		OUTPUT 2	
	OUT0SEL = GND	OUT0SEL = V_A^+	OUT1SEL = GND	OUT1SEL = V_A^+	OUT2SEL = GND	OUT2SEL = V_A^+
LTC6954-1	LVPECL (IBIAS is Off)	LVPECL (IBIAS is On)	LVPECL (IBIAS is Off)	LVPECL (IBIAS is On)	LVPECL (IBIAS is Off)	LVPECL (IBIAS is On)
LTC6954-2	LVPECL (IBIAS is Off)	LVPECL (IBIAS is On)	LVPECL (IBIAS is Off)	LVPECL (IBIAS is On)	**CMOS**	**LVDS**
LTC6954-3	LVPECL (IBIAS is Off)	LVPECL (IBIAS is On)	**CMOS**	**LVDS**	**CMOS**	**LVDS**
LTC6954-4	**CMOS**	**LVDS**	**CMOS**	**LVDS**	**CMOS**	**LVDS**

Table 11. LVDS Current Settings

CLOCK OUTPUT	BIT DESCRIPTOR	BIT	REG ADDR (HEX)	VALUE	I_{LVDS}	DIFFERENTIAL TERMINATION
OUT0	LVCS0	[6]	h02	0	3.5mA	100Ω
				1	7mA	50Ω (100Ω||100Ω)
OUT1	LVCS1	[6]	h04	0	3.5mA	100Ω
				1	7mA	50Ω (100Ω||100Ω)
OUT2	LVCS2	[6]	h06	0	3.5mA	100Ω
				1	7mA	50Ω (100Ω||100Ω)

Rev. A

APPLICATIONS INFORMATION

Setting LVCSx = 1 provides twice the current and enables a maximum operating frequency of 1.4GHz. The higher current setting (I_{LVDS} = 7mA) is ideal for applications where the LVDS output driver is double-terminated (near- and far-end termination). For example, if the LVDS output is terminated at the near end with a differential 100Ω resistor, and at the far end with a differential 100Ω resistor, programming LVCSx = 1 for 7mA operation will allow full LVDS swings. This configuration is properly terminated at both ends, and is therefore more forgiving of the transmission line design and PCB production variations. Figure 24 shows many common LVDS output interfaces to various logic types of inputs.

Each LVDS output can be independently powered down using the PD_OUTx bit. Refer to Table 6, Serial Port Register Mapping, for the name and location of the power down bits. When the LVDS output is powered down it will be in a Hi-Z state.

When the LVDS/CMOS output is configured to LVDS output mode, the CMSINVx bits are ignored. These bits only apply to a CMOS configured output.

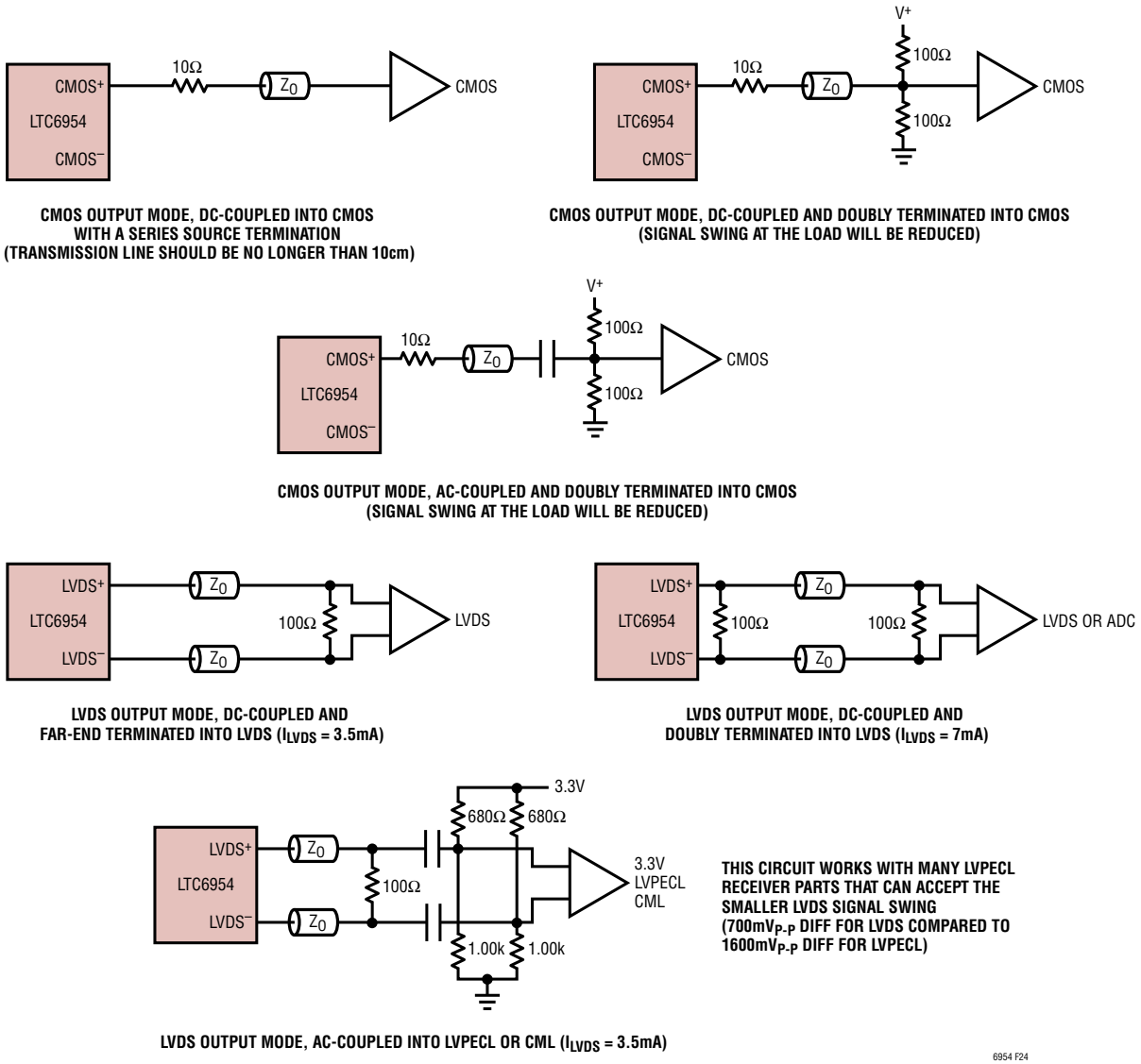

Figure 24. Common LVDS/CMOS Output Interface Configurations.
All Z_0 Signal Traces Are 50Ω Transmission Lines. All Capacitors Are 0.1µF. All Resistors and Capacitors Are Placed as Close as Possible to the Driver or Receiver with the Transmission Line in Between

APPLICATIONS INFORMATION

CMOS OUTPUT MODE (OUTxSEL = GND)

When the output driver is configured for CMOS operation, programming the bit CMSINVx to 1 inverts the OUT^- relative to OUT^+. Setting CMSINVx to 0 results in both OUT^+ and OUT^- being in-phase. See Table 12 for a summary of the registers containing the CMOS phase control bits for each clock output distribution path.

Table 12. CMOS Phase-Select Registers

CLOCK OUTPUT	BIT DESCRIPTOR	BITS	REG ADDR (HEX)
OUT0	CMSINV0	[6]	h01
OUT1	CMSINV1	[6]	h03
OUT2	CMSINV2	[6]	h05

Each CMOS output can be independently powered down using the PD_OUTx bit. Refer to Table 6, Serial Port Register Mapping, for the name and location of the power down bits. When the CMOS output is powered down and CMSINVx = 0 both outputs will be LOW. When CMSINVx = 1, OUTx+ will be LOW and OUTx- will be HIGH.

When the LVDS/CMOS output is configured to CMOS output mode, the LVCSx bits are ignored. These bits only apply to a LVDS configured output.

While the CMOS output is rated at 250MHz, it is recommended that the LVDS output mode be used for operation at frequencies beyond 50MHz. The nature of CMOS signaling (single-ended, large current spikes, large signal swing, poor capacitive load driving) makes it most useful for lower frequencies and short interconnection length. For higher frequencies or longer interconnection lengths, LVDS output mode is a much better choice. LVDS is designed to drive transmission lines and its inherent differential nature provides superior noise immunity.

When a CMOS signal is required, Figure 24 shows some common interfaces. The use of the series termination is the most common configuration and is suitable for short interconnection lengths as the transmission line and the receiver's input capacitance will reduce the rise and fall times. The doubly-terminated circuits suffer from reduced signal swing at the far end and may not be acceptable with some CMOS input circuits.

POWER SUPPLIES FOR CMOS OPERATION

Note that degradation of the phase noise performance can occur if the output supply, V_{OUTx}^+, is noisy because of additional broadband noise or discrete spectral tones. Noise on the V_{OUTx}^+ supply will amplitude-modulate the clock signal. This AM noise may then corrupt the spectral purity through AM to PM conversion. However, using the LTC6954 in LVDS mode will greatly reduce the power supply noise coupling relative to CMOS mode, due to the differential nature of the LVDS outputs.

TEMPERATURE MONITOR

The LTC6954 provides an on-chip diode at Pin 31 (TEMP) for chip temperature measurement. Pin 31 is connected to the anode of an internal diode with its cathode connected to internal ground. The chip temperature can be measured by injecting a constant DC current into Pin 31 and measuring its DC voltage. The voltage vs temperature coefficient of the diode is about –1.73mV/°C with 10µA current injected into the TEMP pin. Figure 25 shows a typical temperature voltage behavior when 10µA and 100µA currents are injected into Pin 31.

A significant percentage of the total current used in the LTC6954 is connected to ground through the exposed pad. The temperature measurement provides a good indicator that the exposed package pad has a good thermal and electrical connection.

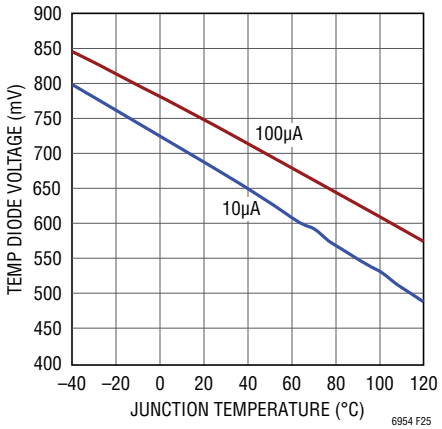

Figure 25. TEMP Diode Voltage vs Junction Temperature (T_J)

APPLICATIONS INFORMATION

Use of a diode based temperature monitoring part such as the LTC2997 is recommended for an accurate measurement. Refer to the LTC2997 Data Sheet for specific information regarding it's use.

If the temperature monitoring feature is not used, connect TEMP to GND.

PCB LAYOUT GUIDELINES

The LTC6954 requires a printed circuit board (PCB) with a clean unbroken ground plane in the first layer beneath the part. A multilayer board with an internal ground plane is recommended. Care must be taken when creating a PCB layout to minimize power supply and ground inductances and to prevent signals from interfering with each other.

Layout for the printed circuit board should ensure that digital signals (serial port, SYNC and OUTxSEL pins) and analog signals (all other signal pins) are separated as much as possible. Additionally, top layer ground fill and grounded vias should be used as barriers to isolate signals from each other.

The LTC6954 input and all signal outputs must be routed using transmission lines. Traces should be as short as possible to minimize capacitance and interference pickup.

The LTC6954's demonstration circuit, DC1954, provides a good example of proper PCB layout. The files for this demo circuit are found on the Linear Technology (www.linear.com) website's LTC6954 landing page.

SUPPLY BYPASSING

High quality ceramic bypass capacitors such as X5R, X7R or X6S dielectrics should be used at all of the V^+ supply pins (V_A^+, V_D^+, V_{IN}^+, V_{OUT0}^+, V_{OUT1}^+ and V_{OUT2}^+). Each pin should have its own bypass capacitor if possible. This is easily achieved with 0201 size capacitors located on the top side layer with the LTC6954. A good strategy is to use 0.01µF, size 0201 capacitors, at one capacitor per pin, on the top side of the PCB with additional 0.1µF size 0402 connected to selected pin pairs on the back side of the PCB. This provides good, high frequency bypassing and minimizes channel-to-channel crosstalk. Demo circuit DC1954 provides a good example of good supply connections, proper bypassing and capacitor ground connections.

Bypass capacitors must be located as close to the pins as possible and connected to ground through a low impedance path. The traces connecting the pins and bypass capacitors must be kept short and should be made as wide as possible. The ground connection for each capacitor must have its own ground via and should also be connected to the top layer ground pour.

THE EXPOSED PAD CONNECTION: SIGNAL GROUNDING AND HEAT TRANSFER

The exposed pad on the bottom of the package is the primary ground connection for the LTC6954 and its connection is as important as any other pin on this part. The inductance to the ground plane must be kept to a minimum to ensure peak performance and good signal integrity. The exposed pad must be soldered directly to a matching PCB land. The PCB land pattern should be connected to the internal ground planes by an array of vias, as shown in Figure 26. Consult the QFN Package User's Guide on Linear Technology website's Packaging Information page for specific recommendations concerning land patterns and land via solder masks.

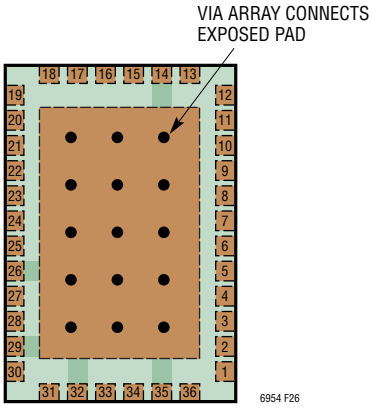

Figure 26. Exposed Pad Land Pattern Highlighting the Array of Ground Vias. Also Note Pins 14, 26, 29, 32 and 35 Are Signal Ground and Connected Directly to the Exposed Pad Land

APPLICATIONS INFORMATION

Additionally, most of the heat generated by the LTC6954 is removed from the die through the bottom side exposed pad onto the printed circuit board. Fortunately, the previously mentioned guidelines for signal grounding also yield the best thermal assembly and layout. Soldering of the exposed pad to a matching PCB land provides the most direct thermal connection. Connecting this PCB land to all ground layers through an array of vias also is the best way to add thermal mass and to spread the heat as much as possible.

For best thermal transfer, the array of vias should extend to the back side of the PCB where a sizable area of the solder mask should be cleared to open the plated copper directly to the air. The exposed area should be at least as large as the land pattern on the top of the PCB. Again, demo circuit DC1954 provides a good example of grounding the LTC6954 from both the signal and thermal standpoints. In a standard laboratory environment, without moving air, demo circuit DC1954's PCB layout yields a junction temperature rise of about 20°C for every watt of power dissipated.

Following the previously mentioned guidelines achieves a good ground signal connection and a good thermal connection. However, much of this good practice can be undone if the ground plane has a significant void or narrowing near the part. This often occurs inadvertently when there is a long row of adjacent signal or power vias. The clearance around these vias can be very close to each other or overlapping, creating a void in the plane. In extreme cases a small ground island can form.

One area on the LTC6954 where a ground plane void could occur is on the side of the part with the outputs OUT0 through OUT2 (Pins 1 to 12). The most difficult case is when all three outputs are to be routed using stripline transmission lines (transmission lines buried between ground planes inside the PCB). Figure 27 illustrates the issue. Using stripline transmission lines necessitates vias to a lower layer preferably located close to each output pin. Additionally, all of the V_{OUTx}^{+} power pins require a via to the power plane that should ideally also be located close to each pin. As shown in Figure 27, when all of these vias are located as close to each pin as possible (which is good for many reasons) and in a row, there is a significant void in the ground plane in this area. This void is undesirable both electrically and thermally. The empty space increases the ground inductance for the output return signal path and decreases the flow of heat in that direction.

Figure 27 also illustrates that by pulling some of the vias away from the part, in this case the OUTx output vias, significant paths for current and heat flow are opened. This is not ideal from the transmission line design standpoint, but definitely improves the ground path inductance and

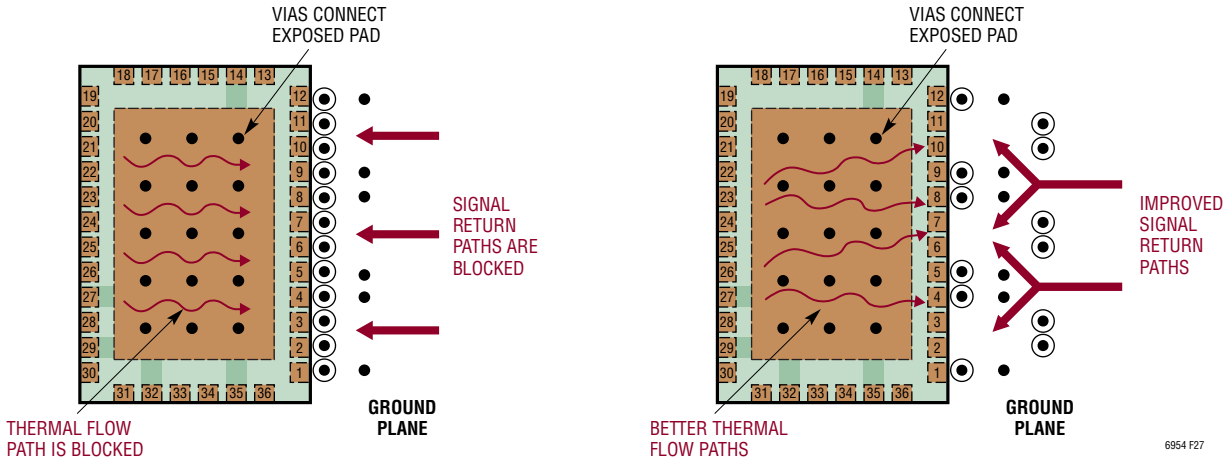

Figure 27. The Ground Plane Can Be Inadvertently Split by a Row of Vias Resulting in Higher Ground Impedance and Poor Heat Transfer. Moving Some Vias or Staggering Them Fixes the Problem

APPLICATIONS INFORMATION

the thermal flow. Alternatively, the V_{OUTx}^{+} supply vias could be pulled farther away from the part or a microstrip transmission line on layer 1 of the PCB could be utilized instead of the strip lines eliminating the need for output vias entirely.

ADC CLOCKING AND JITTER REQUIREMENTS

Adding noise directly to a clean signal clearly reduces its signal-to-noise ratio (SNR). In data acquisition applications, digitizing a clean signal with a noisy clock signal also degrades the SNR. This issue is best explained in the time domain using jitter instead of phase noise. For this discussion, assume that the jitter is white (flat with frequency) and of Gaussian distribution.

Figure 28 shows a sine wave signal entering a typical data acquisition circuit composed of an ADC, an input signal amplifier and a sampling clock. Also shown are three signal sampling scenarios for sampling the sine wave at its zero crossing.

In the first scenario, a perfect sine wave input is buffered by a noiseless amplifier to drive the ADC. Sampling is performed by a perfect, zero jitter clock. Without any added noise or sampling clock jitter, the ADC's digitized output value is very clearly determined and perfectly repeatable from cycle to cycle.

In the second scenario, a perfect sine wave input is buffered by a noisy amplifier to drive the ADC. Sampling is performed by a perfect, zero jitter clock. The added noise results in an uncertainty in the digitized value developing an error term which degrades the SNR. The degraded SNR in this scenario, adding noise to the signal, is expected.

In the third scenario, a perfect sine wave input is buffered by a noiseless amplifier to drive the ADC. Sampling is performed by a clock signal with added jitter. Note that as the signal is slewing, the jitter of the clock signal leads to an uncertainty in the digitized value and an error term just as in the previous scenario. Again, this error term degrades the SNR.

A real world system will have both some additive amplifier noise and some sample clock jitter. Once the signal is digitized, determining the root cause of any SNR degradation—amplifier noise or sampling clock jitter—is often impossible.

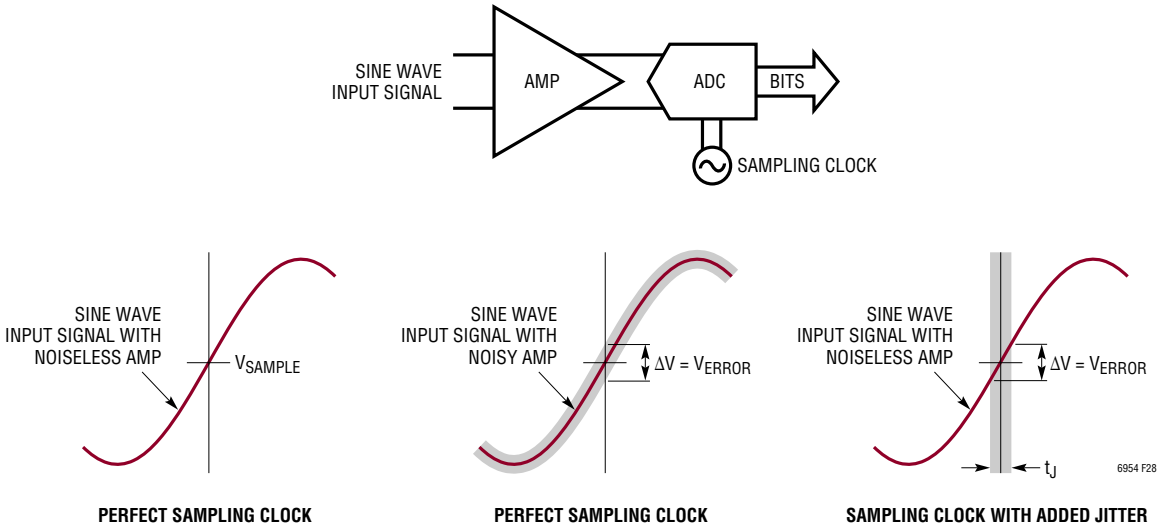

Figure 28. A Typical Data Acquisition Circuit Showing the Sampling Error Effects of a Noisy Amplifier and a Jittery Sampling Clock

APPLICATIONS INFORMATION

Degradation of the SNR due to sample clock jitter only occurs if the input signal is slewing. If the input signal is stationary (DC), then it does not matter when in time the sampling occurs. Additionally, a faster slewing signal yields a greater error (more noise) than a slower slewing signal. Figure 29 demonstrates this effect. Note how much larger the error term is with the fast slewing signal than with the slow slewing signal. The conclusion is to maintain the data converter's SNR performance, digitization of high input frequency signals requires a clock with much less jitter than applications with lower frequency input signals.

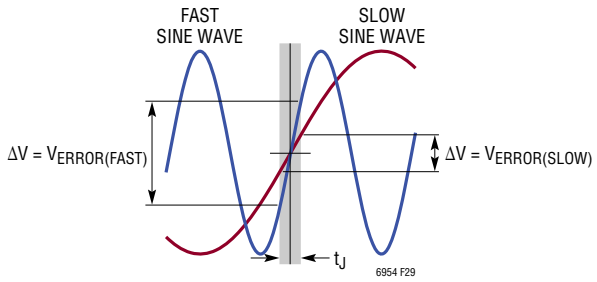

Figure 29. Fast and Slow Sine Wave Signals Sampled with a Jittery Clock

It is important to note that the frequency of the input signal determines the sample clock's jitter requirement. The actual sample clock frequency does not matter. Many ADC applications that undersample high frequency signals have especially challenging sample clock jitter requirements.

The previous discussion was useful for gaining an intuitive feel for the SNR degradation due to sampling clock jitter. Quantitatively, the actual sample clock jitter requirement for a given application is calculated as follows:

$$t_{J(TOTAL)} = \frac{10^{\frac{-SNR_{dB}}{20}}}{2 \bullet \pi \bullet f_{SIG}}$$

Where f_{SIG} is the highest frequency signal to be digitized expressed in Hz, SNR_{dB} is the SNR requirement in decibels and $t_{J(TOTAL)}$ is the total RMS jitter in seconds. The total jitter is the RMS sum of the ADC's aperture jitter and the sample clock jitter calculated as follows:

$$t_{J(TOTAL)} = \sqrt{t^2_{J(CLK)} + t^2_{J(ADC)}}$$

Alternatively, for a given total jitter, the attainable SNR limitation is calculated as follows:

$$SNR_{dB} = -20 \bullet \log_{10} (2 \bullet \pi \bullet f_{SIG} \bullet t_{J(TOTAL)})$$

These calculations assume a full-scale sine wave input signal. If the input signal is a complex, modulated signal with a moderate crest factor, the peak slew rate of the signal may be lower and the sample clock jitter requirement may be relaxed.

These calculations are also theoretical. They assume a noiseless ADC with infinite resolution. All realistic ADCs have both added noise and a resolution limit. The limitations of the ADC must be accounted for to prevent overspecifying the sampling clock.

Figure 30 plots the previous equations and provides a simple and quick way to estimate the sampling clock jitter requirement for a given input signal or the expected SNR performance for a given sample clock jitter.

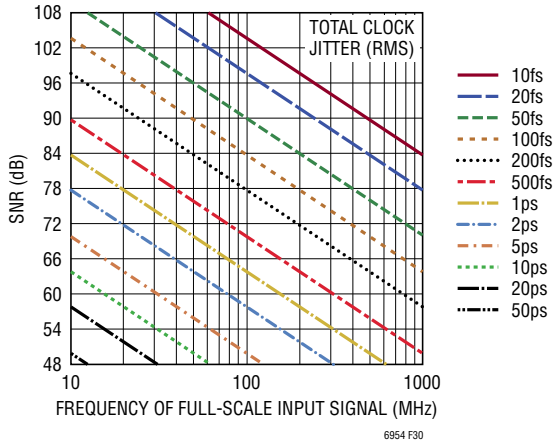

Figure 30. SNR vs Input Signal Frequency vs Sample Clock Jitter

APPLICATIONS INFORMATION

ADC SAMPLE CLOCK INPUT DRIVE REQUIREMENTS

Modern high speed, high resolution ADCs are incredibly sensitive components able to match laboratory instruments in many regards. With wide bandwidth and wide dynamic range, noise or interfering signals on the analog signal input, the voltage reference or the sampling clock input can easily appear in the digitized data. To deliver the full performance of any ADC, the sampling clock input must be driven with a clean, low jitter signal.

Figure 31 shows a simplified version of a typical ADC sample clock input. In this case, the input pins are labeled $ENC^{\pm}$ for encode, while some ADCs label the inputs $CLK^{\pm}$ for clock. The input is composed of a differential limiting amplifier stage followed by a buffer that directly controls the ADC's track-and-hold stage.

The input amplifier requires a minimum input signal amplitude to enter limiting. The sampling clock signal's amplitude should be somewhat greater than the minimum requirement to assure that the amplifier is limiting under all conditions, but not so large as to damage the ADC. A typical minimum input signal level is in the $300mV_{P-PDIFF}$ to $400mV_{P-PDIFF}$ range.

The sample clock input amplifier also benefits from a fast slewing input signal as the amplifier has noise of its own. By slewing through the crossover region quickly, the amplifier noise creates less jitter than if the transition was slow.

As shown in Figure 31, the ADC's sample clock input is typically differential. Although the amplifier will work fine with a single-ended input signal, a differential sampling clock typically delivers the best performance.

The LTC6954 meets all of these sample clock input requirements. The output signals are differential, low phase noise (thus low jitter), have sharp rise and fall times and drive high speed transmission lines with more than enough signal swing.

The LTC6954's LVPECL outputs are recommended for the best phase noise performance. While the LVDS and CMOS signals provide good phase noise performance, the LVPECL outputs have the lowest phase noise.

TRANSMISSION LINES AND TERMINATION

Interconnection of high speed signaling with fast rise and fall times requires the use of transmission lines with properly matched termination. The transmission lines may be stripline, microstrip or any other design topology. A detailed discussion of transmission line design is beyond the scope of this data sheet. Any mismatch between the transmission line's characteristic impedance and the terminating impedance results in a portion of the signal reflecting back toward the other end of the transmission line. In the extreme case of an open- or short-circuit termination, all of the signal is reflected back.

This signal reflection leads to overshoot and ringing on the waveform. The frequency of ringing is proportional to the propagation delay through the transmission line, which is mostly dependent on the length of the line. The

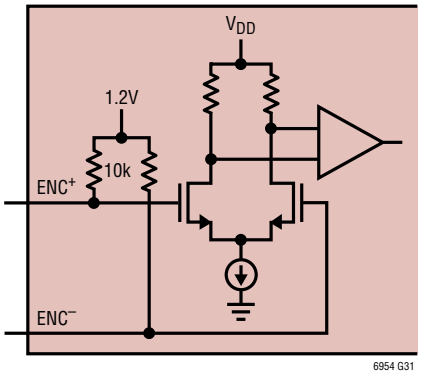

Figure 31. Simplified ADC Sample Clock Input Circuit

APPLICATIONS INFORMATION

amplitude of the ringing is dependent on the degree of mismatch between the transmission line's characteristic impedance and the termination impedance at each end of the line. The greater the mismatch, the larger the reflection and the greater the amplitude of the ringing. Figure 32 shows three methods of transmission line termination with a low impedance driver and a high impedance receiver.

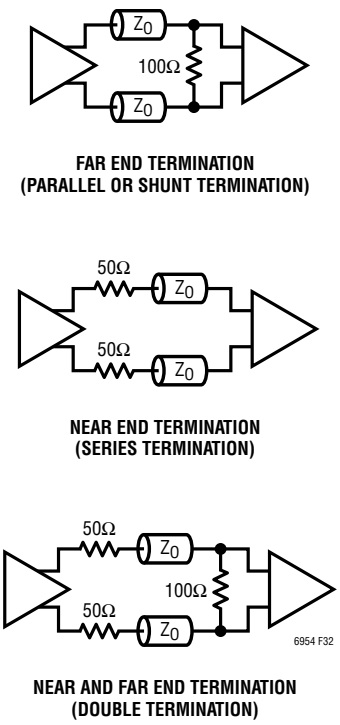

Figure 32. Transmission Line Termination Methods (Z_0 = 50Ω)

Far-end termination is sometimes referred to as parallel or shunt termination of the transmission line. Its purpose is to match the transmission line's impedance and prevent signal reflection back to the driver. Any mismatch at the far end results in a portion of the initial signal being reflected back to the driver. As the low impedance driver is poorly matched to the transmission line, most of this reflected signal is re-reflected back to the receiver. This back and forth signaling continues until the reflected signal energy eventually dies out.

Near-end termination is sometimes referred to as series or back termination. Its purpose is to match the transmission line and prevent any reflected signal from the far end from being re-reflected back to the receiver. The far-end receiver is a high impedance and is poorly matched to the transmission line resulting in most of the signal being reflected back to the driver. The termination at the source absorbs most of this reflected signal, but if there is a mismatch in the impedance, some of the signal is re-reflected back to the receiver. This back-and-forth signaling continues until the reflected signal energy eventually dies out.

Near- and far-end termination is sometimes referred to as double termination. The advantage of double termination over the simpler far-end or near-end termination is if there is any mismatch at the far end, its reflection will be largely absorbed by the near-end termination and the reflected energy dies out rapidly as each re-reflected signal is considerably smaller at each turn.

The disadvantage of double termination is that the signal level at the receiver is only half the amplitude of the source's signal. However, this loss of signal amplitude is acceptable in many cases. The series resistor used in near-end termination also adds some noise to the signal.

Double termination makes for a more robust and forgiving system design. Production variation of the printed circuit board (PCB) that would affect the transmission line's characteristic impedance are more easily accommodated. Variation of the termination resistor value and its nonidealities are also less critical. Delivering good signal integrity is more easily achieved with double termination of transmission lines at the cost of some added noise.

ADC SAMPLE CLOCK INPUT SIGNAL INTEGRITY REQUIREMENTS

Figure 31 is a simplified ADC sample clock input circuit. The simplification omits many of the circuit details and also omits parasitic elements in the circuit. These parasitic elements play an important role in the ADC's sample clock input signal integrity requirements.

Logic applications tolerate signal overshoot and ringing to a very high level. For a logic system to work properly, the only requirement is that logic 0 and logic 1 states are separable. A logic 0 or logic 1 state signal with large amounts of ringing, ripple and interference causes little concern in a logic system.

APPLICATIONS INFORMATION

The ADC sample clock input has a different signal integrity requirement than a logic input. In fact, the ADC sample clock should never be thought of as a logic signal. It is more like the local oscillator (LO) input signal of a mixer where signal noise, ringing and interferers are imprinted onto the signal of interest. However, in a mixer application, undesired out of band signals are often easily filtered away at the output. Due to the sampling nature of an ADC, undesired high frequency signals can fold back into the frequency band of interest and corrupt the desired signal. In the case of an ADC, noise, ringing and interference can appear in the digitized data along with the analog input signal and are not easily removed with digital filtering.

Without considering parasitic signal paths, it appears that once the input amplifier is limiting, any noise or ringing at the ADC's sample clock input has no affect. However, the ADC's sample clock input has several parasitic elements that provide a signal path to the track-and-hold circuit and ultimately to the digitized data. On-chip layout and device parasitic capacitance present one path for undesired high frequency signals to couple into the track-and-hold. Another path is the ADC's substrate resistance. As this resistance is finite, coupling through this path is also possible. The coupling through these paths is heavily attenuated, but with SFDR in excess of 100dB in modern ADCs, it does not take very much coupled signal to appear in the digitized data.

USING THE LTC6954 TO DRIVE ADC SAMPLE CLOCK INPUTS

As noted earlier, the LTC6954's LVPECL outputs are recommended for the best phase noise performance. These outputs are designed to interface with standard LVPECL devices while driving transmission lines with far-end termination only. Configured this way, the signal conforms to the LVPECL standard and the swing is very large, at $1.6V_{P-PDIFF}$. The use of far-end termination only in LVPECL systems presents trade-offs of power consumption, signal swing and signal integrity (overshoot and ringing).

As the LTC6954's LVPECL output signal's rise and fall times are very fast (typically less than 135ps), there is typically no need for a signal as large as the full LVPECL level at the ADC sample clock input. An approach to consider is to use the LVPECL outputs and provide both near-end and far-end termination of the transmission line. The signal is attenuated at the far end and does not meet the LVPECL signal level specifications, but most ADC sample clock inputs do not require a proper LVPECL level signal.

Figure 33 shows three LVPECL output configurations that satisfy this requirement. One configuration has the standard LVPECL common mode voltage and the other is level-shifted down to a 1.2V common mode voltage. Being 50% duty cycle signals, AC-coupling the outputs is also a viable solution, as shown in the last configuration.

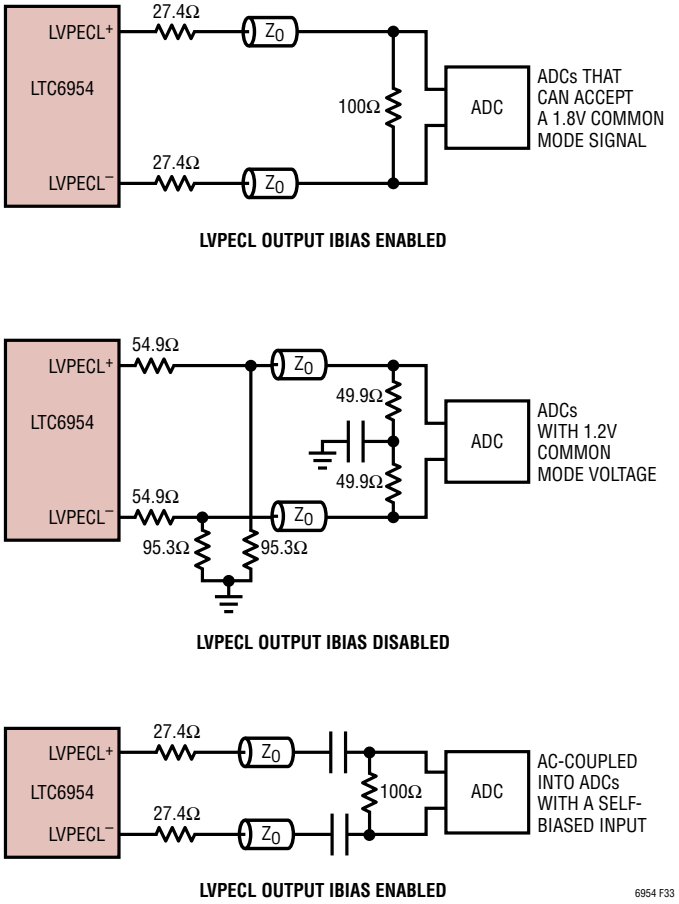

Figure 33. LVPECL Output Connections to ADC Sample Clock Inputs (Z_0 = 50Ω)

APPLICATIONS INFORMATION

Note that the series, near-end termination is 27.4Ω, not 50Ω. The LTC6954's LVPECL output impedance is about 5Ω and must also be accounted for, but the biggest reason the near-term resistor is less than 50Ω is because it adds noise to the signal. So, the near-end termination shown here presents a trade-off of transmission line impedance matching over production variations (signal integrity) against the added noise. If the far-end termination is perfectly matched to the transmission line's characteristic impedance, then the near-end termination is not needed at all. However, perfect matching is elusive, and making provisions in the PCB layout for near-end series termination, even if initially populated with 0Ω resistors, is highly recommended.

While the LVPECL outputs provide the best ADC sample clock driver performance, the LVDS output can still provide very good performance. Compared to the LVPECL output, the LVDS output has slightly higher 1/f phase noise and phase noise floor. This slightly higher phase noise, and jitter, are still suitable for many ADC applications.

When driving the sample clock input of an ADC with the LVDS output driver, it is best to use the highest current setting (LVCSx = 1 for I_{LVDS} = 7mA), and a doubly-terminated transmission line, as shown in Figure 34. This configuration is properly terminated at both ends, and is therefore more forgiving of the transmission line design and PCB production variations.

Using the CMOS output to drive the sample clock input of high performance, high frequency ADCs is not recommended. Using the same output pins in LVDS output mode is a better performing choice and certainly better for routing the signal any significant length. However, some ADCs require a CMOS level sample clock signal.

In these cases, the connection between the LTC6954 and the ADC should be as short as possible with partial source termination, as shown in Figure 35.

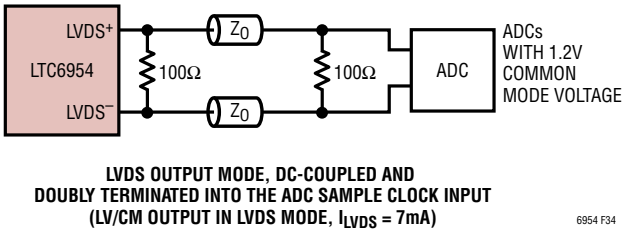

Figure 34. LVDS Output Connections to ADC Sample Clock Inputs (Z_0 = 50Ω)

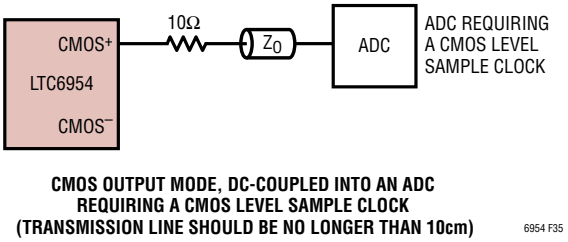

Figure 35. CMOS Output Connections to ADC Sample Clock Inputs (Z_0 = 50Ω)

TYPICAL APPLICATIONS

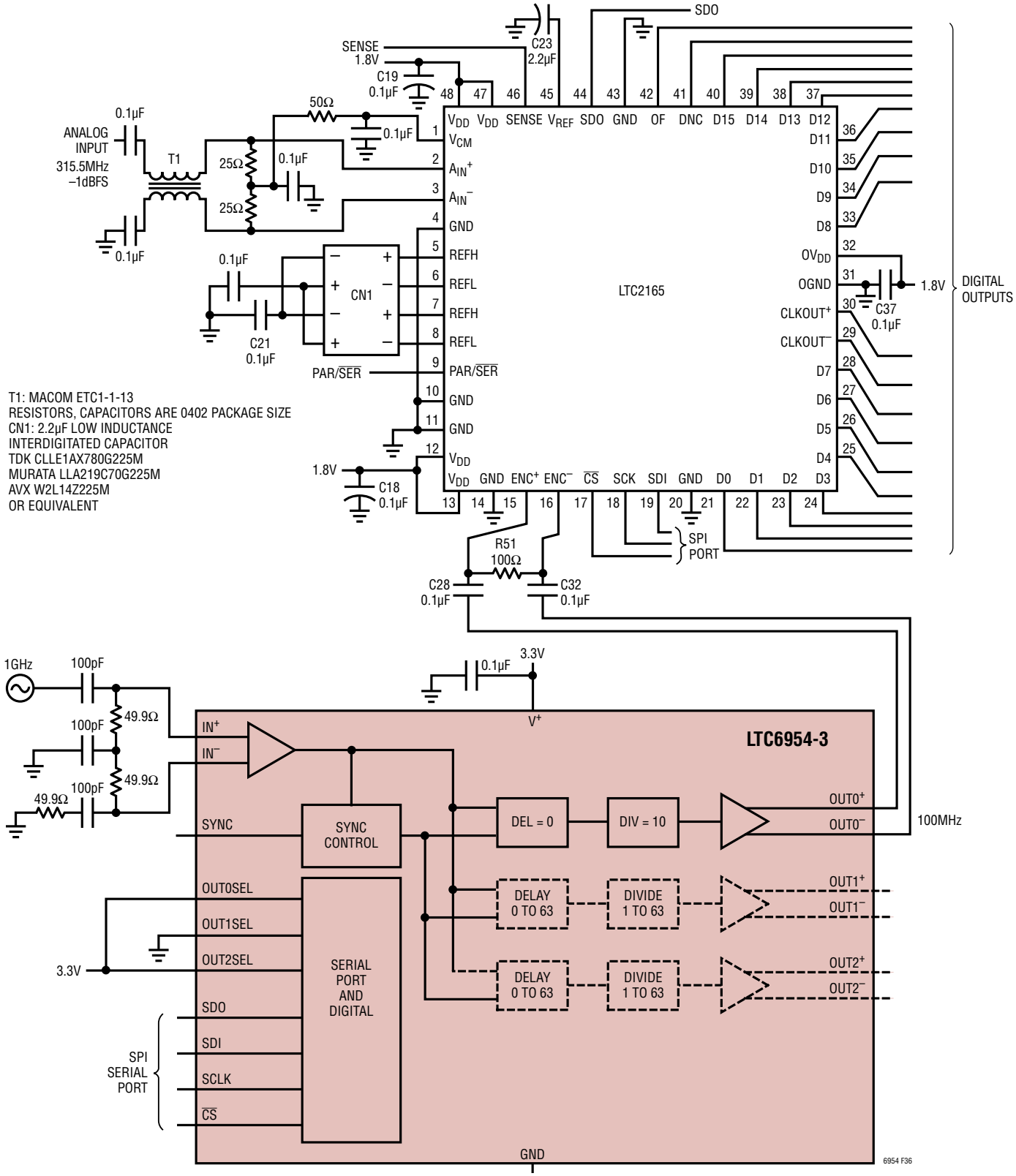

Figure 36. LTC6954 Driving the Encode Sample Clock Input of an LTC2165, 125Msps, 16-Bit ADC

TYPICAL APPLICATIONS

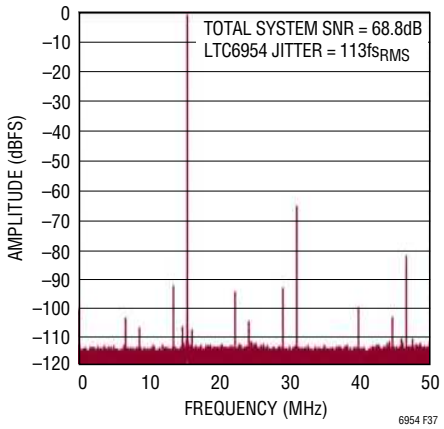

Figure 37. LTC2165 64k Point FFT, f_{IN} = 315MHz, –1dBFS, 100Msps. Sample Clock Provided by the LTC6954 at 100MHz

PACKAGE DESCRIPTION

UFF Package
36-Lead Plastic QFN (4mm × 7mm)
(Reference LTC DWG # 05-08-1863 Rev Ø)

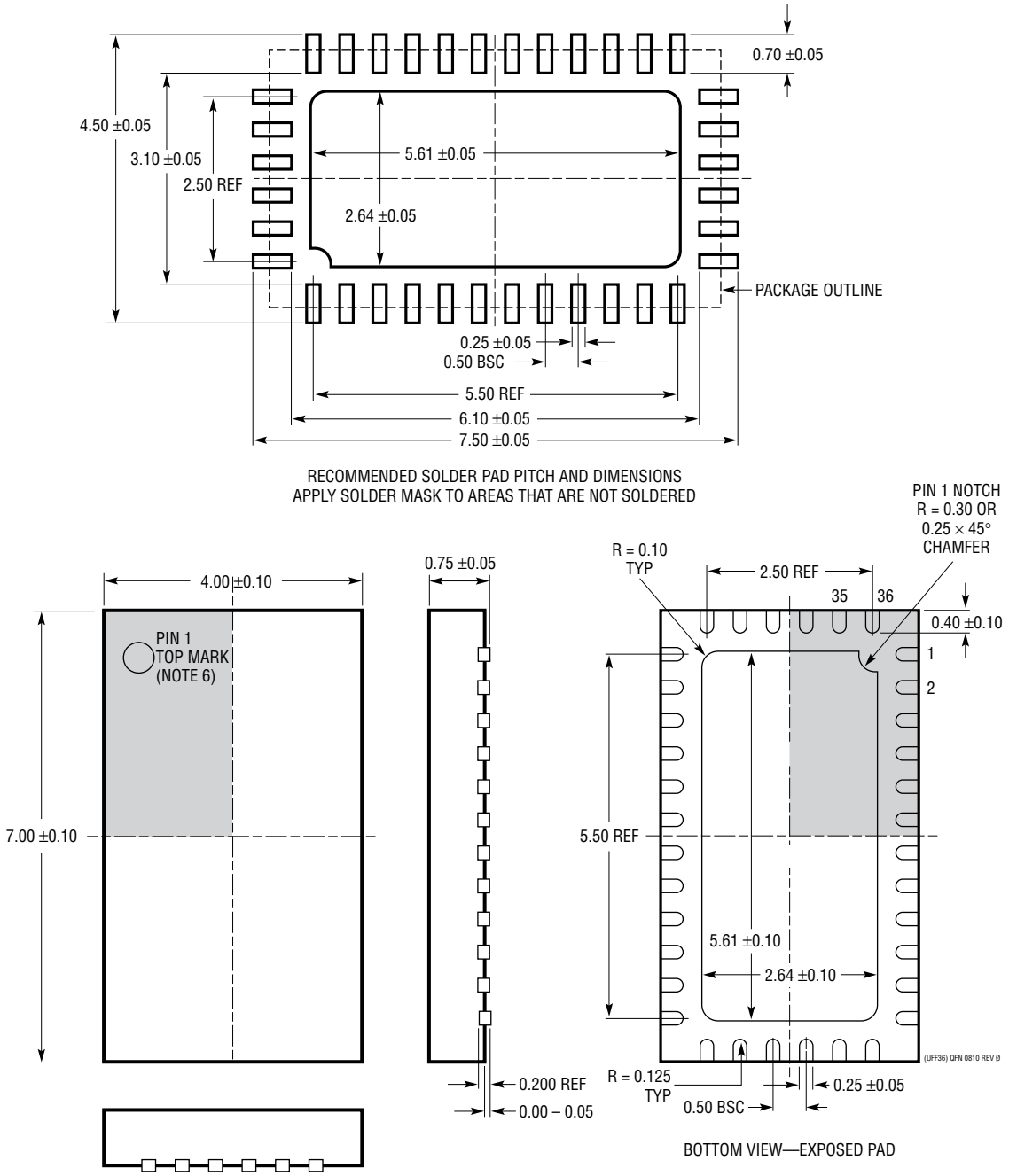

NOTE:
1. DRAWING IS NOT A JEDEC PACKAGE OUTLINE
2. DRAWING NOT TO SCALE
3. ALL DIMENSIONS ARE IN MILLIMETERS
4. DIMENSIONS OF EXPOSED PAD ON BOTTOM OF PACKAGE DO NOT INCLUDE MOLD FLASH. MOLD FLASH, IF PRESENT, SHALL NOT EXCEED 0.20mm ON ANY SIDE
5. EXPOSED PAD SHALL BE SOLDER PLATED
6. SHADED AREA IS ONLY A REFERENCE FOR PIN 1 LOCATION ON THE TOP AND BOTTOM OF PACKAGE

Rev. A

REVISION HISTORY

REV	DATE	DESCRIPTION	PAGE NUMBER
A	03/20	Decreased t_{PD} minimum specifications.	4

Information furnished by Analog Devices is believed to be accurate and reliable. However, no responsibility is assumed by Analog Devices for its use, nor for any infringements of patents or other rights of third parties that may result from its use. Specifications subject to change without notice. No license is granted by implication or otherwise under any patent or patent rights of Analog Devices.

TYPICAL APPLICATION

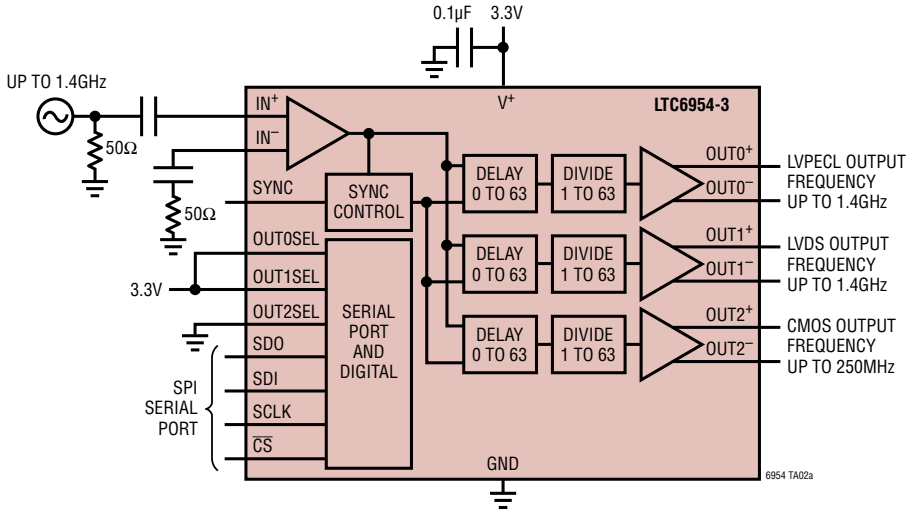

Additive Phase Noise vs Offset Frequency, f_{IN} = 622.08MHz, Mx[5:0] = 4, f_{OUTx} = 155.52MHz

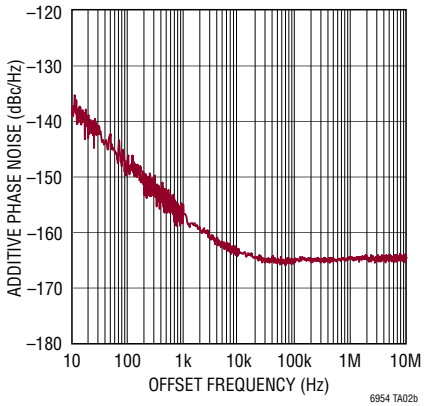

RELATED PARTS

PART NUMBER	DESCRIPTION	COMMENTS
LTC6945	Ultralow Noise and Spurious Integer-N Synthesizer	350MHz to 6GHz, –226dBc/Hz Normalized In-Band Phase Noise Floor, –157dBc/Hz Wideband Output Phase Noise Floor
LTC6946	Ultralow Noise and Spurious Integer-N Synthesizer with Integrated VCO	370MHz to 6.4GHz, –226dBc/Hz Normalized In-Band Phase Noise Floor, –157dBc/Hz Wideband Output Phase Noise Floor
LTC6947	Ultralow Noise and Spurious Fractional-N Synthesizer	350MHz to 6GHz, –226dBc/Hz Normalized In-Band Phase Noise Floor, –157dBc/Hz Wideband Output Phase Noise Floor, Integer-N Spurious Performance
LTC6948	Ultralow Noise and Spurious Fractional-N Synthesizer with Integrated VCO	370MHz to 6.4GHz, –226dBc/Hz Normalized In-Band Phase Noise Floor, –157dBc/Hz Wideband Output Phase Noise Floor, Integer-N Spurious Performance
LTC6950	Low Phase Noise and Spurious Integer-N PLL Core with Five Output Clock Distribution and EZSync Clock Edge Synchronization	1.4GHz Max VCO Frequency, Additive Jitter <20fs_{RMS}, –226dBc/Hz Normalized In-Band Phase Noise Floor, –274dBc/Hz Normalized 1/f Phase Noise Floor
LTC6957	Low Phase Noise, Dual Output Buffer/Driver/Logic Converter	Optimized Conversion of Sine Waves to Logic Levels, LVPECL/LVDS/CMOS Outputs, DC-300MHz, 45fs_{RMS} additive jitter (LVPECL)

© ANALOG DEVICES, INC. 2015-2020