M24512-R
M24512-W M24512-DR

512 Kbit serial I²C bus EEPROM with three Chip Enable lines

Features

- Compatible with all I²C bus modes:
  - 1 MHz Fast-mode Plus
  - 400 kHz Fast mode
  - 100 kHz Standard mode
- Memory array:
  - 512 Kb (64 Kbytes) of EEPROM
  - Page size: 128 bytes
- M24512- DR: additional Write lockable Page (Identification page)
- Noise suppression
  - Schmitt trigger inputs
  - Input noise filter
- Write
  - Byte Write within 5 ms
  - Page Write within 5 ms
- Random and Sequential Read modes
- Write protect of the whole memory array
- Single supply voltage:
  - 1.8 V to 5.5 V
  - 2.5 V to 5.5 V
- Enhanced ESD/Latch-Up protection
- More than 1 million Write cycles
- More than 40-year data retention
- Packages
  - ECOPACK2® (RoHS compliant and Halogen-free)

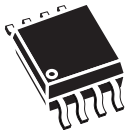

SO8 (MW)
208 mils width

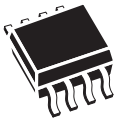

SO8 (MN)
150 mils width



TSSOP8 (DW)



UFDFPN8 (MB)
2 × 3 mm (MLP)



WLCSP (CS)

Contents

1 **Description** 6

2 **Signal description** 8

2.1 Serial Clock (SCL) 8

2.2 Serial Data (SDA) 8

2.3 Chip Enable (E0, E1, E2) 8

2.4 Write Control ($\overline{WC}$) 8

2.5 V_{SS} ground 9

2.6 Supply voltage (V_{CC}) 9

2.6.1 Operating supply voltage V_{CC} 9

2.6.2 Power-up conditions 9

2.6.3 Device reset 9

2.6.4 Power-down conditions 9

3 **Device operation** 13

3.1 Start condition 13

3.2 Stop condition 13

3.3 Acknowledge bit (ACK) 13

3.4 Data input 13

3.5 Addressing the memory array 14

3.6 Addressing the Identification page (M24512-DR only) 14

3.7 Write operations 16

3.8 Byte Write 16

3.9 Page Write (memory array) 16

3.10 Write Identification Page (M24512-DR only) 16

3.11 Lock Identification Page (M24512-DR only) 17

3.12 ECC (error correction code) and write cycling 17

3.13 Minimizing system delays by polling on ACK 19

3.14 Read operations 20

3.15 Random Address Read (in memory array) 20

3.16 Current Address Read (in memory array) 21

3.17 Sequential Read 21

3.18 Read Identification Page (M24512-D only) 21
3.19 Read the lock status (M24512-D only) 22
3.20 Acknowledge in Read mode 22

4 Initial delivery state 23

5 Maximum rating 23

6 DC and AC parameters 24

7 Package mechanical data 30

8 Part numbering 35

9 Revision history 37

List of tables

Table 1. Signal names . . . 6
Table 2. Device select code (for memory array) . . . 11
Table 3. Device select code to access the Identification page (M24512-DR only) . . . 11
Table 4. Most significant address byte . . . 12
Table 5. Least significant address byte . . . 12
Table 6. Operating modes . . . 14
Table 7. Absolute maximum ratings . . . 23
Table 8. Operating conditions (voltage range W) . . . 24
Table 9. Operating conditions (voltage range R) . . . 24
Table 10. AC test measurement conditions . . . 24
Table 11. Input parameters . . . 25
Table 12. DC characteristics (voltage range W) . . . 25
Table 13. DC characteristics (voltage range R) . . . 26
Table 14. 400 kHz AC characteristics . . . 27
Table 15. 1 MHz AC characteristics . . . 28
Table 16. SO8W – 8-lead plastic small outline, 208 mils body width, package data . . . 30
Table 17. SO8N – 8-lead plastic small outline, 150 mils body width, package mechanical data . . . 31
Table 18. TSSOP8 – 8-lead thin shrink small outline, package mechanical data . . . 32
Table 19. UFDFPN8 (MLP8) 8-lead ultra thin fine pitch dual flat package no lead 2 x 3 mm, data . . . 33
Table 20. WLCSP-R 8 bumps, data . . . 34
Table 21. Ordering information scheme . . . 35
Table 22. Available M24512-W and M24512-R products (package, voltage range, temperature grade) . . . 36
Table 23. Available M24512-DR products (package, voltage range, temperature grade) . . . 36
Table 24. Document revision history . . . 37

List of figures

Figure 1. Logic diagram . . . 6
Figure 2. SO, UFDFPN and TSSOP connections . . . 7
Figure 3. WLCSP connections (top view, marking side, with balls on the underside) . . . 7
Figure 4. Device select code . . . 8
Figure 5. I^2C Fast mode (f_C = 400 kHz): maximum R_{bus} value versus bus parasitic capacitance (C_{bus}) . . . 10
Figure 6. I^2C Fast mode Plus (f_C = 1 MHz): maximum R_{bus} value versus bus parasitic capacitance (C_{bus}) . . . 10
Figure 7. I^2C bus protocol . . . 11
Figure 8. Write mode sequences with $\overline{WC}$ = 1 (data write inhibited) . . . 15
Figure 9. Write mode sequences with $\overline{WC}$ = 0 (data write enabled) . . . 18
Figure 10. Write cycle polling flowchart using ACK . . . 19
Figure 11. Read mode sequences . . . 20
Figure 12. AC test measurement I/O waveform . . . 24
Figure 13. AC timings . . . 29
Figure 14. SO8W – 8-lead plastic small outline, 208 mils body width, package outline . . . 30
Figure 15. SO8N – 8-lead plastic small outline, 150 mils body width, package outline . . . 31
Figure 16. TSSOP8 – 8-lead thin shrink small outline, package outline . . . 32
Figure 17. UFDFPN8 (MLP8) 8-lead ultra thin fine pitch dual flat package no lead 2 x 3 mm, outline . . . 33
Figure 18. WLCSP-R 8 bumps, outline . . . 34

1 Description

The M24512-x devices are I^2C-compatible electrically erasable programmable memories (EEPROM). They are organized as 64 Kb × 8 bits.

The M24512-D also offers an additional page, named the Identification Page (128 bytes) which can be written and (later) permanently locked in Read-only mode. This Identification Page offers flexibility in the application board production line, as it can be used to store unique identification parameters and/or parameters specific to the production line.

The device behaves as a slave in the I^2C protocol, with all memory operations synchronized by the serial clock. Read and Write operations are initiated by a Start condition, generated by the bus master. The Start condition is followed by a device select code and Read/$\overline{\text{Write}}$ bit ($\overline{\text{RW}}$) terminated by an acknowledge bit.

When writing data to the memory, the device inserts an acknowledge bit during the 9th bit time, following the bus master's 8-bit transmission. When data is read by the bus master, the bus master acknowledges the receipt of the data byte in the same way. Data transfers are terminated by a Stop condition after an Ack for Write, and after a NoAck for Read.

Figure 1. Logic diagram

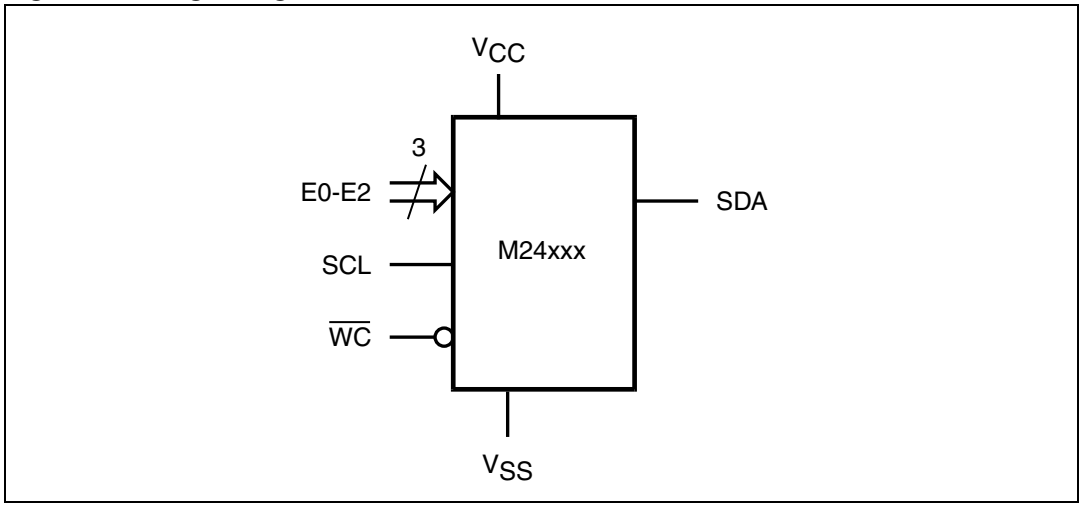

Table 1. Signal names

Signal name	Function	Direction
E0, E1, E2	Chip Enable	Inputs
SDA	Serial Data	I/O
SCL	Serial Clock	Input
$\overline{\text{WC}}$	Write Control	Input
V_{CC}	Supply voltage	
V_{SS}	Ground	

Figure 2. SO, UFDFPN and TSSOP connections

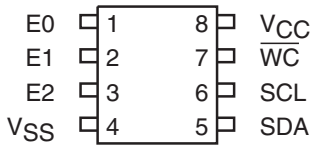

1. See *Package mechanical data* section for package dimensions, and how to identify pin-1.

Figure 3. WLCSP connections (top view, marking side, with balls on the underside)

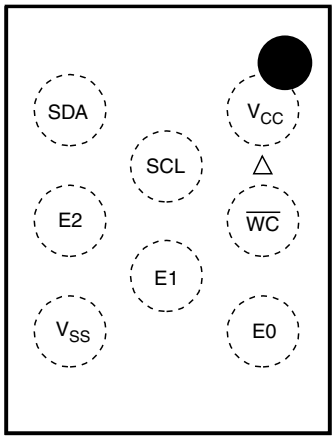

Caution: As EEPROM cells loose their charge (and so their binary value) when exposed to ultra violet (UV) light, EEPROM dice delivered in wafer form or in WLCSP package by STMicroelectronics must never be exposed to UV light.

2 Signal description

2.1 Serial Clock (SCL)

This input signal is used to strobe all data in and out of the device. In applications where this signal is used by slave devices to synchronize the bus to a slower clock, the bus master must have an open drain output, and a pull-up resistor must be connected from Serial Clock (SCL) to V_{CC}. (*Figure 6* indicates how the value of the pull-up resistor can be calculated). In most applications, though, this method of synchronization is not employed, and so the pull-up resistor is not necessary, provided that the bus master has a push-pull (rather than open drain) output.

2.2 Serial Data (SDA)

This bidirectional signal is used to transfer data in or out of the device. It is an open drain output that may be wire-OR'ed with other open drain or open collector signals on the bus. A pull up resistor must be connected from Serial Data (SDA) to V_{CC}. (*Figure 6* indicates how the value of the pull-up resistor can be calculated).

2.3 Chip Enable (E0, E1, E2)

These input signals are used to set the value that is to be looked for on the three least significant bits (b3, b2, b1) of the 7-bit device select code. These inputs must be tied to V_{CC} or V_{SS}, to establish the device select code. When not connected (left floating), these inputs are read as Low (0,0,0).

Figure 4. Device select code

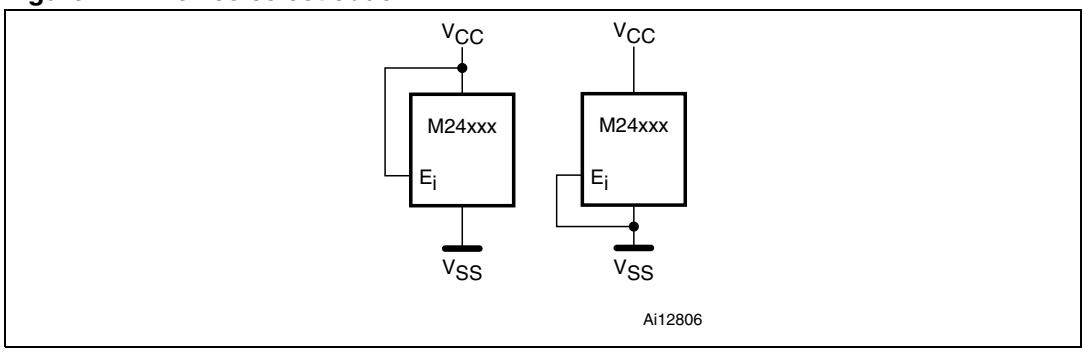

2.4 Write Control ($\overline{WC}$)

This input signal is useful for protecting the entire contents of the memory from inadvertent write operations. Write operations are disabled to the entire memory array when Write Control ($\overline{WC}$) is driven High. When unconnected, the signal is internally read as V_{IL}, and Write operations are allowed.

When Write Control ($\overline{WC}$) is driven High, device select and address bytes are acknowledged, Data bytes are not acknowledged.

2.5 V_{SS} ground

V_{SS} is the reference for the V_{CC} supply voltage.

2.6 Supply voltage (V_{CC})

2.6.1 Operating supply voltage V_{CC}

Prior to selecting the memory and issuing instructions to it, a valid and stable V_{CC} voltage within the specified [V_{CC}(min), V_{CC}(max)] range must be applied (see *Table 8*, *Table 9*). In order to secure a stable DC supply voltage, it is recommended to decouple the V_{CC} line with a suitable capacitor (usually of the order of 10 nF to 100 nF) close to the V_{CC}/V_{SS} package pins.

This voltage must remain stable and valid until the end of the transmission of the instruction and, for a Write instruction, until the completion of the internal write cycle (t_W).

2.6.2 Power-up conditions

V_{CC} has to rise continuously from 0 V up to V_{CC}(min) (see *Table 8*, *Table 9*), and the rise time must not vary faster than 1 V/µs.

2.6.3 Device reset

In order to prevent inadvertent write operations during power-up, a power on reset (POR) circuit is included. At power-up, the device does not respond to any instruction until V_{CC} reaches an internal reset threshold voltage. This threshold is lower than the minimum V_{CC} operating voltage defined in *Table 8*, *Table 9*.

When V_{CC} passes over the POR threshold, the device is reset and enters the Standby Power mode. However, the device must not be accessed until V_{CC} reaches a valid and stable V_{CC} voltage within the specified [V_{CC}(min), V_{CC}(max)] range.

In a similar way, during power-down (continuous decrease in V_{CC}), as soon as V_{CC} drops below the power on reset threshold voltage, the device stops responding to any instruction sent to it.

2.6.4 Power-down conditions

During power-down (where V_{CC} decreases continuously), the device must be in the Standby Power mode (mode reached after decoding a Stop condition, assuming that there is no internal Write cycle in progress).

Figure 5. I^2C Fast mode (f_C = 400 kHz): maximum R_{bus} value versus bus parasitic capacitance (C_{bus})

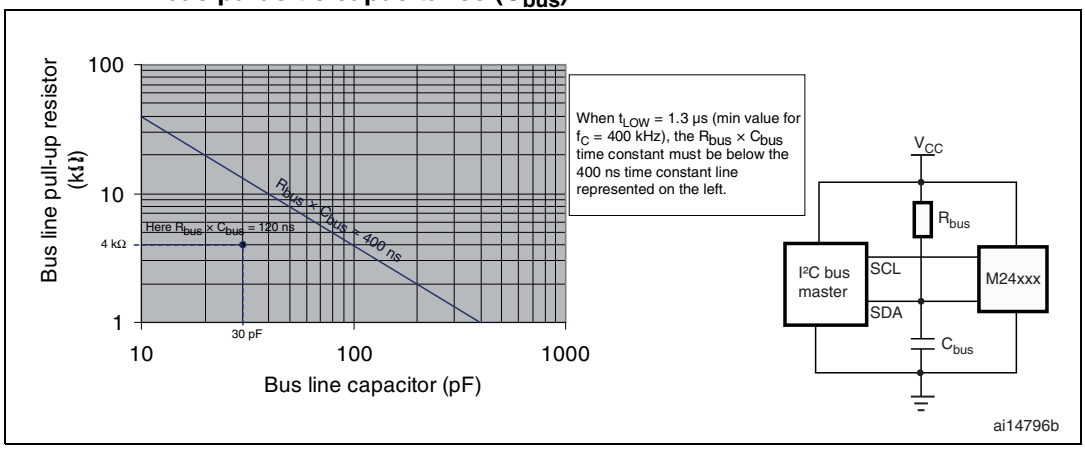

Figure 6. I^2C Fast mode Plus (f_C = 1 MHz): maximum R_{bus} value versus bus parasitic capacitance (C_{bus})

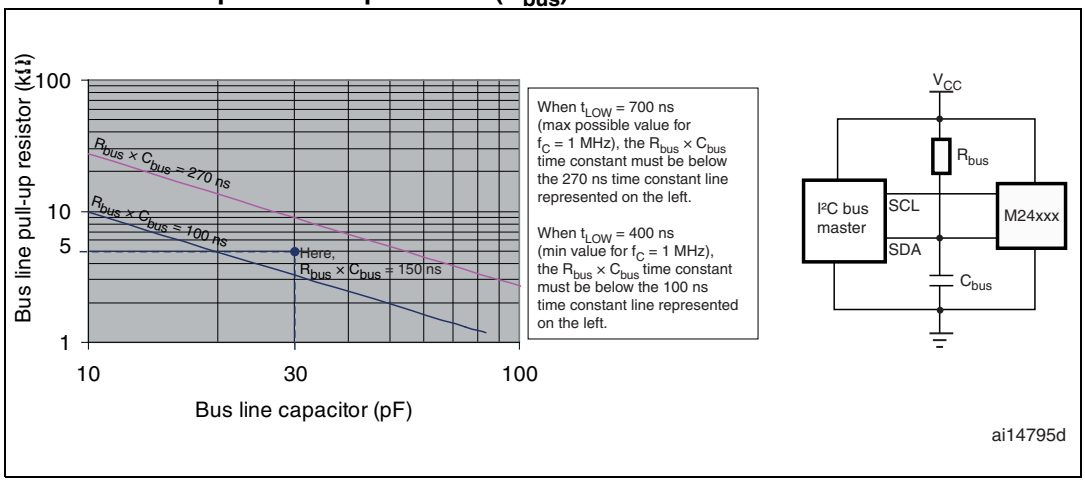

Figure 7. I^2C bus protocol

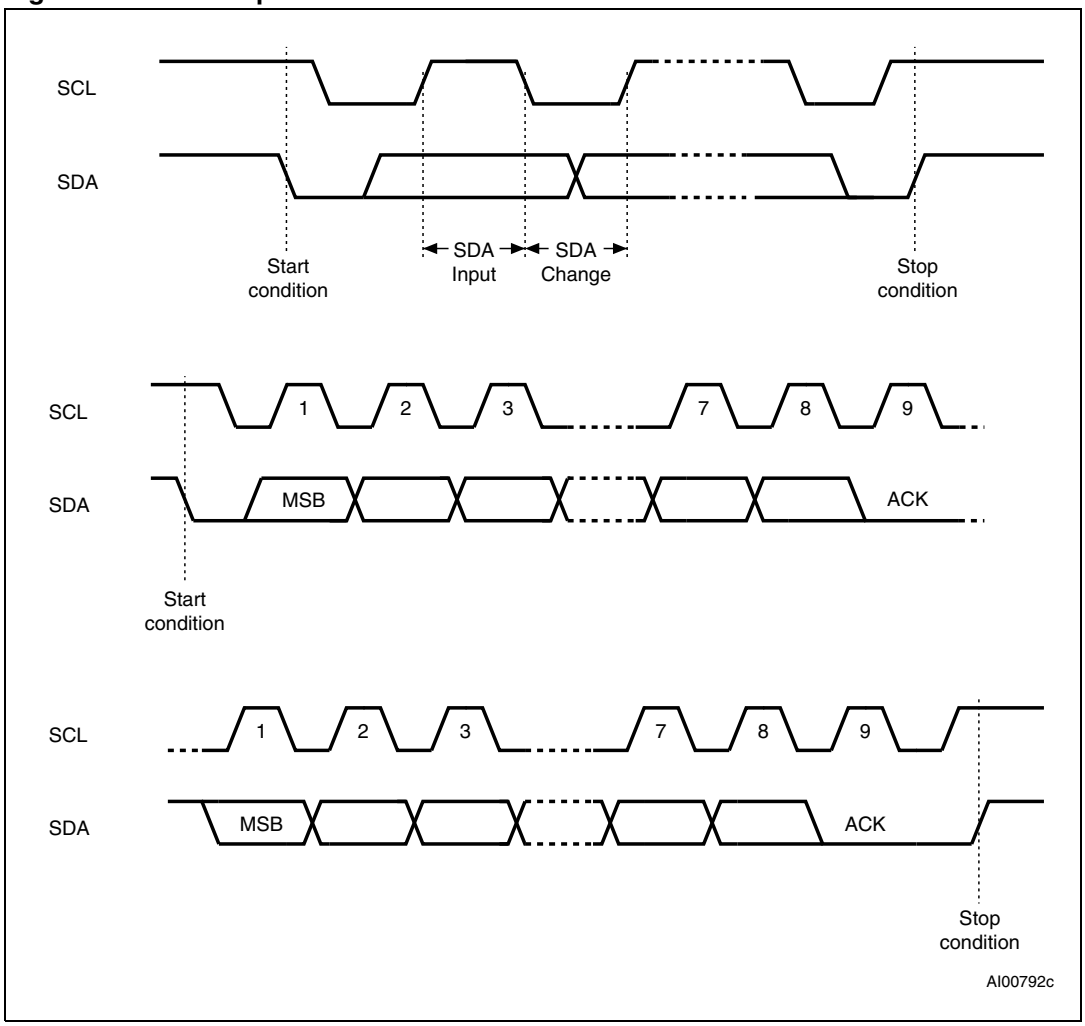

Table 2. Device select code (for memory array)

	Device type identifier(1)				Chip Enable address(2)			RW
	b7	b6	b5	b4	b3	b2	b1	b0
Device select code	1	0	1	0	E2	E1	E0	RW

1. The most significant bit, b7, is sent first.
2. E0, E1 and E2 are compared against the respective external pins on the memory device.

Table 3. Device select code to access the Identification page (M24512-DR only)

	Device type identifier(1)				Chip Enable address(2)			RW
	b7	b6	b5	b4	b3	b2	b1	b0
Device select code	1	0	1	1	E2	E1	E0	RW

1. The most significant bit, b7, is sent first.
2. E0, E1 and E2 are compared against the respective external pins on the memory device.

Table 4. Most significant address byte

b15	b14	b13	b12	b11	b10	b9	b8

Table 5. Least significant address byte

b7	b6	b5	b4	b3	b2	b1	b0

3 Device operation

The device supports the I^2C protocol. This is summarized in *Figure 7*. Any device that sends data on to the bus is defined to be a transmitter, and any device that reads the data to be a receiver. The device that controls the data transfer is known as the bus master, and the other as the slave device. A data transfer can only be initiated by the bus master, which will also provide the serial clock for synchronization. The device is always slave in all communications.

3.1 Start condition

Start is identified by a falling edge of Serial Data (SDA) while Serial Clock (SCL) is stable in the High state. A Start condition must precede any data transfer instruction. The device continuously monitors (except during a Write cycle) Serial Data (SDA) and Serial Clock (SCL) for a Start condition.

3.2 Stop condition

Stop is identified by a rising edge of Serial Data (SDA) while Serial Clock (SCL) is stable and driven High. A Stop condition terminates communication between the device and the bus master. A Read instruction that is followed by NoAck can be followed by a Stop condition to force the device into the Standby mode. A Stop condition at the end of a Write instruction triggers the internal Write cycle.

3.3 Acknowledge bit (ACK)

The acknowledge bit is used to indicate a successful byte transfer. The bus transmitter, whether it be bus master or slave device, releases Serial Data (SDA) after sending eight bits of data. During the 9th clock pulse period, the receiver pulls Serial Data (SDA) Low to acknowledge the receipt of the eight data bits.

3.4 Data input

During data input, the device samples Serial Data (SDA) on the rising edge of Serial Clock (SCL). For correct device operation, Serial Data (SDA) must be stable during the rising edge of Serial Clock (SCL), and the Serial Data (SDA) signal must change *only* when Serial Clock (SCL) is driven Low.

3.5 Addressing the memory array

To start communication between the bus master and the slave device, the bus master must initiate a Start condition. Following this, the bus master sends the device select code, shown in *Table 2* (on Serial Data (SDA), most significant bit first).

The device select code consists of a 4-bit device type identifier, and a 3-bit Chip Enable "Address" (E2, E1, E0). To address the memory array, the 4-bit Device Type Identifier is 1010b.

Up to eight memory devices can be connected on a single I^2C bus. Each one is given a unique 3-bit code on the Chip Enable (E0, E1, E2) inputs. When the device select code is received, the device only responds if the Chip Enable Address is the same as the value on the Chip Enable (E0, E1, E2) inputs.

The 8th bit is the Read/$\overline{\text{Write}}$ bit ($\overline{\text{RW}}$). This bit is set to 1 for Read and 0 for Write operations.

If a match occurs on the device select code, the corresponding device gives an acknowledgment on Serial Data (SDA) during the 9th bit time. If the device does not match the device select code, it deselects itself from the bus, and goes into Standby mode.

Table 6. Operating modes

Mode	$\overline{\text{RW}}$ bit	$\overline{\text{WC}}$(1)	Bytes	Initial sequence
Current Address Read	1	X	1	Start, device select, $\overline{\text{RW}}$ = 1
Random Address Read	0	X	1	Start, device select, $\overline{\text{RW}}$ = 0, Address
	1	X		re-Start, device select, $\overline{\text{RW}}$ = 1
Sequential Read	1	X	≥ 1	Similar to Current or Random Address Read
Byte Write	0	V_{IL}	1	Start, device select, $\overline{\text{RW}}$ = 0
Page Write	0	V_{IL}	≤ 128	Start, device select, $\overline{\text{RW}}$ = 0

1. X = V_{IH} or V_{IL}.

3.6 Addressing the Identification page (M24512-DR only)

The M24512-DR features an additional memory page, referred to as Identification page. Read and write operations can be performed on this page, except if a Lock instruction has been issued to permanently write protect it.

The M24512-DR Identification page is addressed in the same way as the memory array, except that the 4-bit device type identifier of the device select code is 1011b (see *Table 3*).

Figure 8. Write mode sequences with $\overline{WC}$ = 1 (data write inhibited)

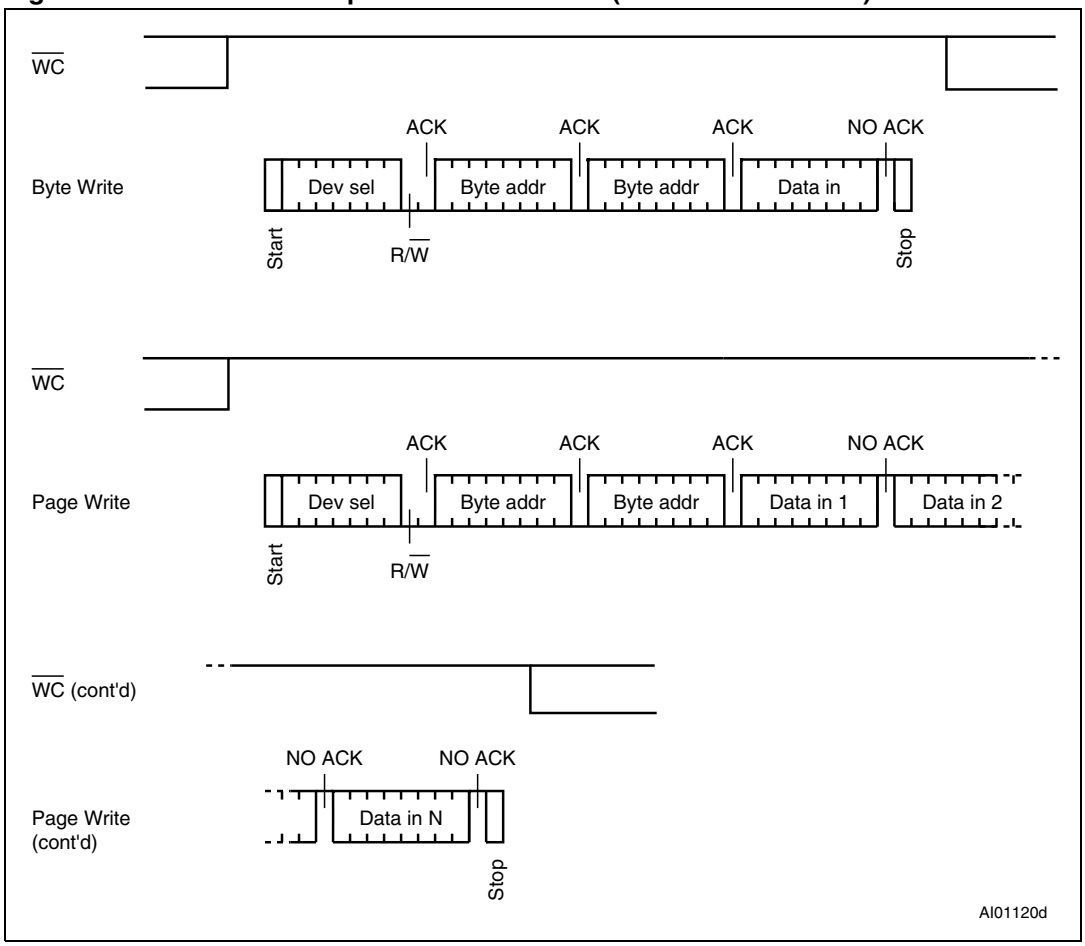

3.7 Write operations

Following a Start condition the bus master sends a device select code with the Read/$\overline{\text{Write}}$ bit ($\overline{\text{RW}}$) reset to 0. The device acknowledges this, as shown in *Figure 9*, and waits for two address bytes. The device responds to each address byte with an acknowledge bit, and then waits for the data byte.

Each data byte in the memory has a 16-bit (two byte wide) address. The most significant byte (*Table 4*) is sent first, followed by the least significant byte (*Table 5*). Bits b15 to b0 form the address of the byte in memory.

When the bus master generates a Stop condition immediately after a data byte Ack bit (in the "10th bit" time slot), either at the end of a Byte Write or a Page Write, the internal Write cycle is triggered. A Stop condition at any other time slot does not trigger the internal Write cycle.

After the Stop condition, the delay t_W, and the successful completion of a Write operation, the device's internal address counter is incremented automatically, to point to the next byte address after the last one that was modified.

During the internal Write cycle, Serial Data (SDA) is disabled internally, and the device does not respond to any requests.

If the Write Control input (WC) is driven High, the Write instruction is not executed and the accompanying data bytes are *not* acknowledged, as shown in *Figure 8*.

3.8 Byte Write

After the device select code and the address bytes, the bus master sends one data byte. If the addressed location is Write-protected, by Write Control ($\overline{\text{WC}}$) being driven High, the device replies with NoAck, and the location is not modified. If, instead, the addressed location is not Write-protected, the device replies with Ack. The bus master terminates the transfer by generating a Stop condition, as shown in *Figure 9*.

3.9 Page Write (memory array)

The Page Write mode allows up to or 128 bytes to be written in a single Write cycle, provided that they are all located in the same 'row' in the memory: that is, the most significant memory address bits (b15-b7) are the same. If more bytes are sent than will fit up to the end of the row, a condition known as 'roll-over' occurs. This should be avoided, as data starts to become overwritten in an implementation dependent way.

The bus master sends from 1 to or 128 bytes of data, each of which is acknowledged by the device if Write Control ($\overline{\text{WC}}$) is Low. If Write Control ($\overline{\text{WC}}$) is High, the contents of the addressed memory location are not modified, and each data byte is followed by a NoAck. After each byte is transferred, the internal byte address counter (the 7 least significant address bits only) is incremented. The transfer is terminated by the bus master generating a Stop condition.

3.10 Write Identification Page (M24512-DR only)

The Identification Page (128 bytes) is an additional page which can be written and (later) permanently locked in Read-only mode. The identification page is written by issuing an

Write Identification Page instruction. This instruction uses the same protocol and format as Page Write (into memory array), except for the following differences:

- Device type identifier = 1011b
- MSB address bits A15/A7 are don't care except for address bit A10 which must be ‘0’.

LSB address bits A6/A0 define the byte address inside the identification page.

If the Identification page is locked, the data bytes transferred during the Write Identification Page instruction are not acknowledged (NoAck).

3.11 Lock Identification Page (M24512-DR only)

The Lock Identification Page instruction (Lock ID) permanently locks the Identification page in read-only mode. The Lock ID instruction is similar to Byte Write (into memory array) with the following specific conditions:

- Device Type Identifier = 1011b
- Address bit A10 must be ‘1’; all other address bits are don't care
- The data byte must be equal to the binary value xxxx xx1x, where x is don't care.

If the Identification Page is locked, the data bytes transferred during the ID Write instruction are not acknowledged (NoAck).

3.12 ECC (error correction code) and write cycling

The M24512-x devices offer an ECC (error correction code) logic which compares each 4-byte word with its six associated ECC EEPROM bits. As a result, if a single bit out of 4 bytes of data happens to be erroneous during a Read operation, the ECC detects it and replaces it by the correct value. The read reliability is therefore much improved by the use of this feature.

Note however that even if a single byte has to be written, 4 bytes are internally modified (plus the ECC bits), that is, the addressed byte is cycled together with the other three bytes making up the word. It is therefore recommended to write by word (4 bytes) at address 4*N (where N is an integer) in order to benefit from the larger amount of Write cycles.

The M24512-x devices are qualified at 1 million (1 000 000) Write cycles, using a cycling routine that writes to the device by multiples of 4-bytes.

Figure 9. Write mode sequences with $\overline{WC}$ = 0 (data write enabled)

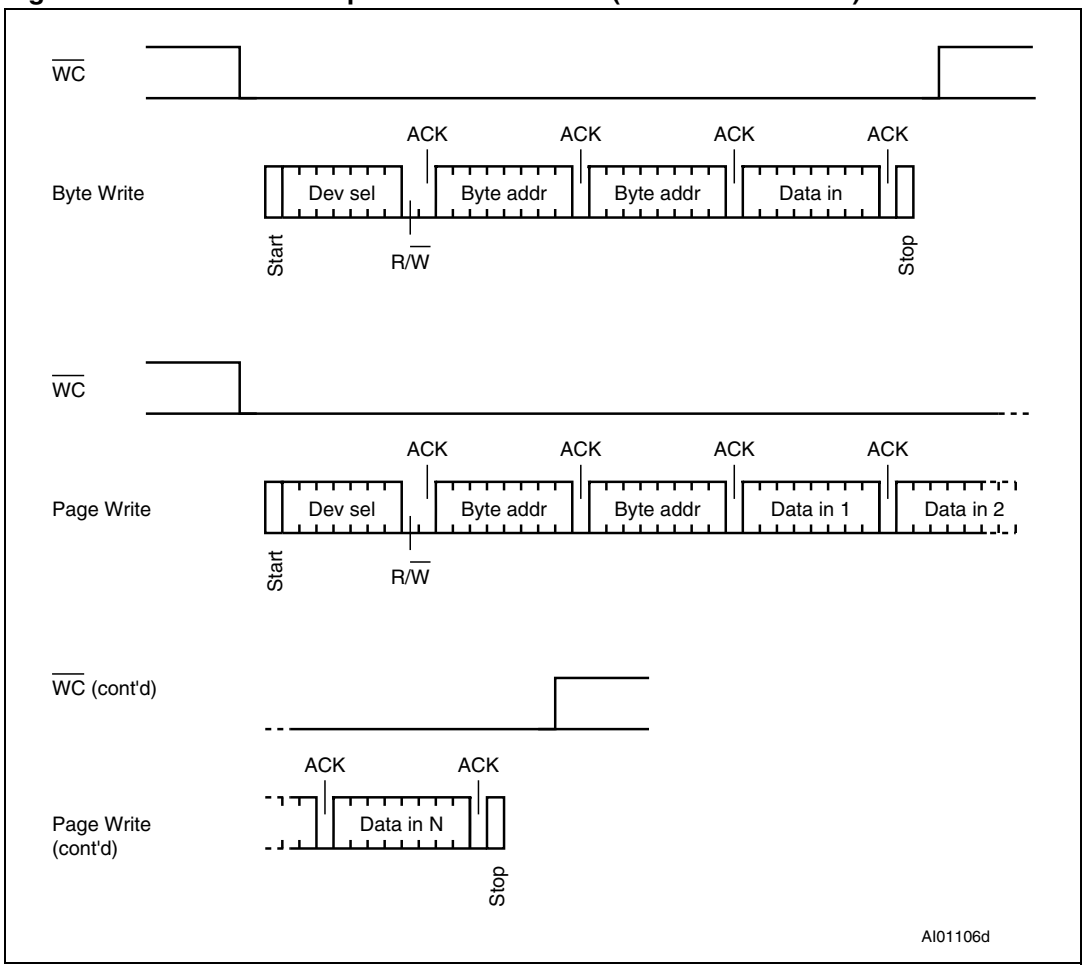

Figure 10. Write cycle polling flowchart using ACK

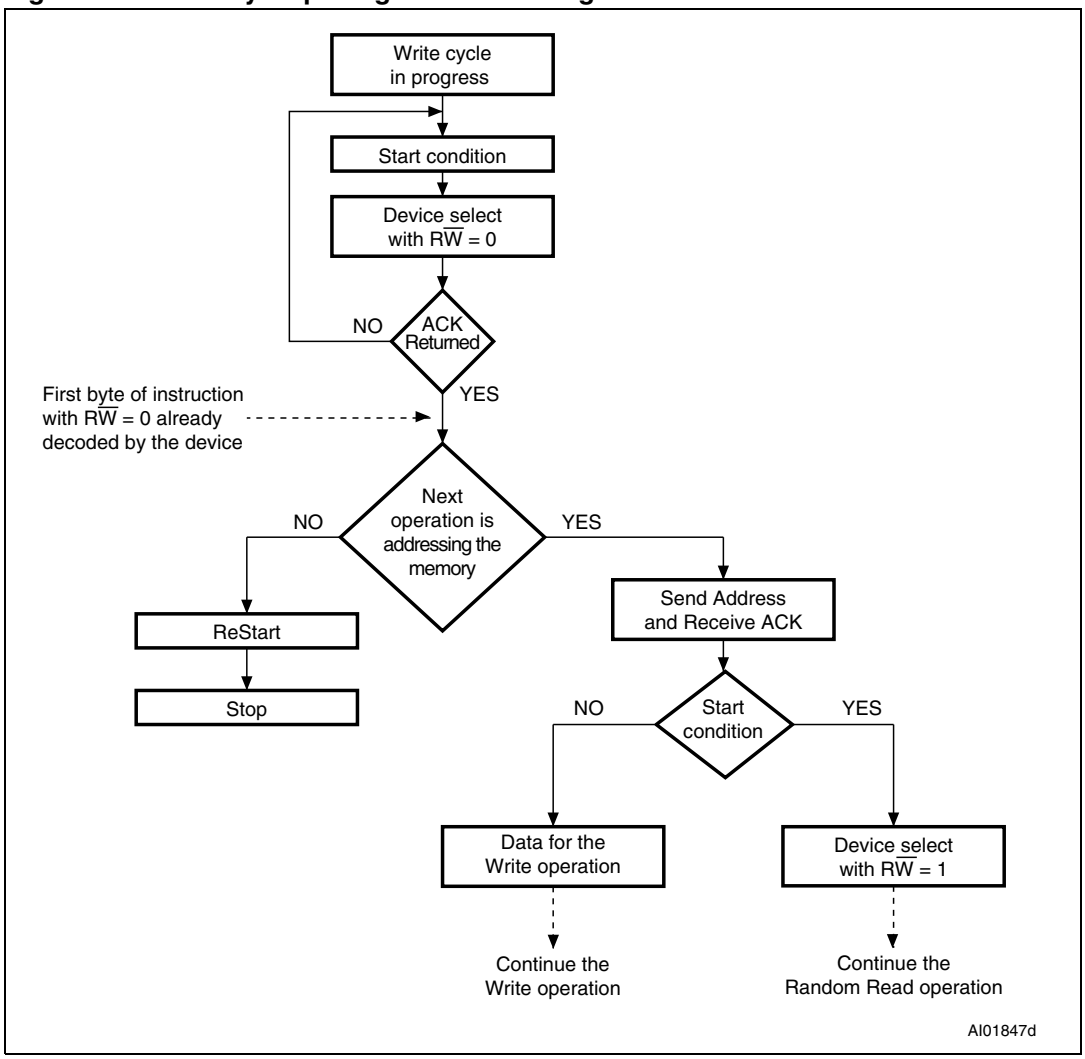

3.13 Minimizing system delays by polling on ACK

During the internal Write cycle, the device disconnects itself from the bus, and writes a copy of the data from its internal latches to the memory cells. The maximum Write time (t_w) is shown in *Table 14*, but the typical time is shorter. To make use of this, a polling sequence can be used by the bus master.

The sequence, as shown in *Figure 10*, is:

- Initial condition: a Write cycle is in progress.
- Step 1: the bus master issues a Start condition followed by a device select code (the first byte of the new instruction).
- Step 2: if the device is busy with the internal Write cycle, no Ack will be returned and the bus master goes back to Step 1. If the device has terminated the internal Write cycle, it responds with an Ack, indicating that the device is ready to receive the second part of the instruction (the first byte of this instruction having been sent during Step 1).

3.14 Read operations

Read operations are performed independently of the state of the Write Control ($\overline{WC}$) signal.

After the successful completion of a Read operation, the device's internal address counter is incremented by one, to point to the next byte address.

Figure 11. Read mode sequences

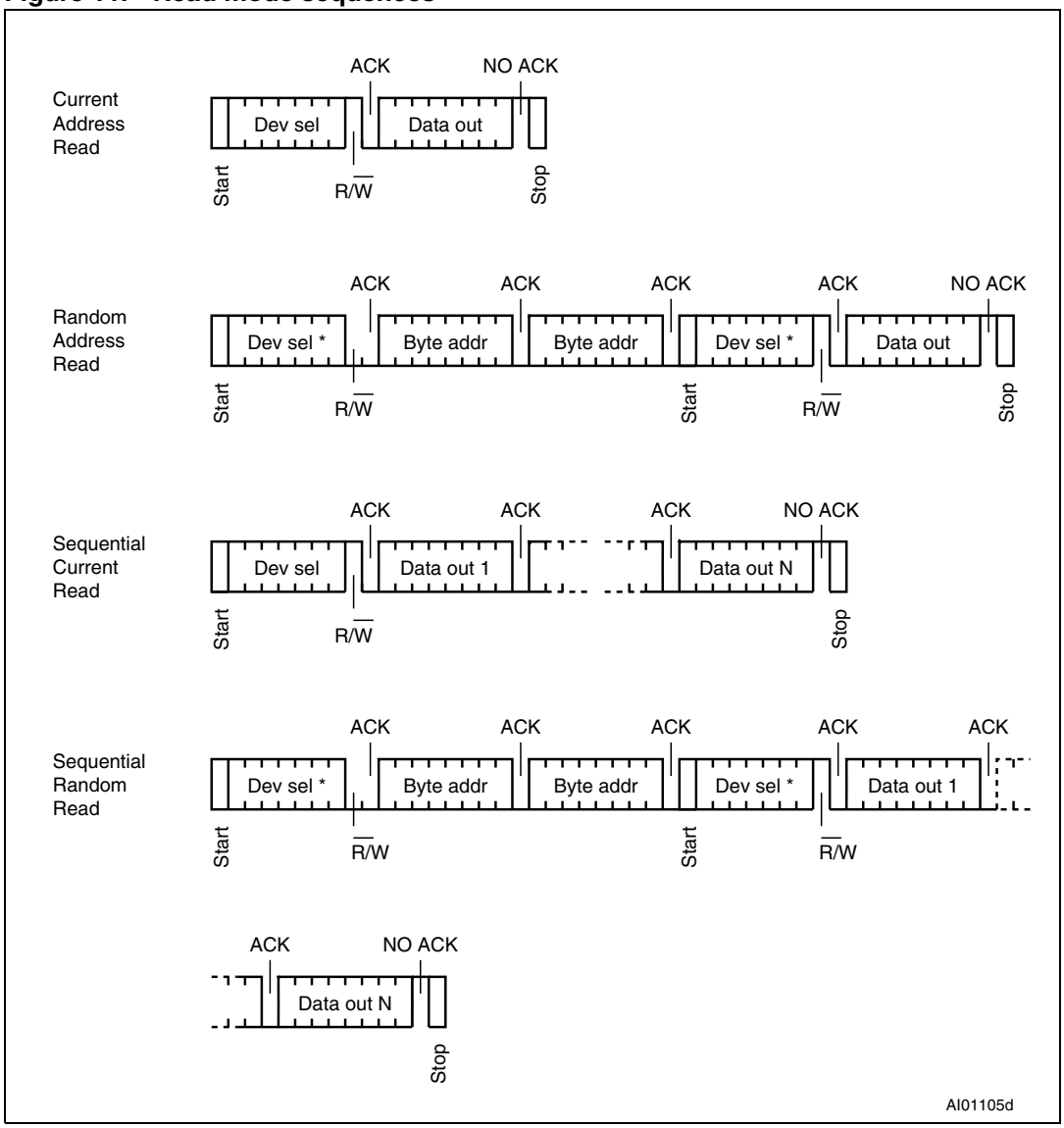

3.15 Random Address Read (in memory array)

A dummy Write is first performed to load the address into this address counter (as shown in *Figure 11*) but *without* sending a Stop condition. Then, the bus master sends another Start condition, and repeats the device select code, with the Read/$\overline{Write}$ bit ($R\overline{W}$) set to 1. The device acknowledges this, and outputs the contents of the addressed byte. The bus master must *not* acknowledge the byte, and terminates the transfer with a Stop condition.

3.16 Current Address Read (in memory array)

For the Current Address Read operation, following a Start condition, the bus master only sends a device select code with the Read/$\overline{\text{Write}}$ bit (R$\overline{\text{W}}$) set to 1. The device acknowledges this, and outputs the byte addressed by the internal address counter. The counter is then incremented. The bus master terminates the transfer with a Stop condition, as shown in *Figure 11*, *without* acknowledging the byte.

3.17 Sequential Read

This operation can be used after a Current Address Read or a Random Address Read. The bus master *does* acknowledge the data byte output, and sends additional clock pulses so that the device continues to output the next byte in sequence. To terminate the stream of bytes, the bus master must *not* acknowledge the last byte, and *must* generate a Stop condition, as shown in *Figure 11*.

The output data comes from consecutive addresses, with the internal address counter automatically incremented after each byte output. After the last memory address, the address counter 'rolls-over', and the device continues to output data from memory address 00h.

3.18 Read Identification Page (M24512-D only)

The Identification Page (128 bytes) is an additional page which can be written and (later) permanently locked in Read-only mode.

The Identification Page can be read by issuing an Read Identification Page instruction. This instruction uses the same protocol and format as the Random Address Read (from memory array) with device type identifier defined as 1011b. The MSB address bits A15/A7 are don't care, the LSB address bits A6/A0 define the byte address inside the Identification Page.The number of bytes to read in the ID page must not exceed the page boundary (e.g.: when reading the Identification Page from location 100d, the number of bytes should be less than or equal to 28, as the ID page boundary is 128 bytes).

If the Identification Page is locked, the data bytes are read as FFh.

3.19 Read the lock status (M24512-D only)

The locked/unlocked status of the Identification page can be checked by issuing a specific truncated instruction consisting of the Identification Page Write instruction (see *Section 3.10*) followed by one data byte. The data byte will be acknowledged if the Identification page is unlocked, while it will not be acknowledged if the Identification page is locked.

Once the acknowledge bit of this data byte is read, it is recommended to generate a Start condition followed by a Stop condition, so that:

- The instruction is truncated and not executed as the Start condition resets the device internal logic.
- The device is set to Standby mode by the Stop condition.

3.20 Acknowledge in Read mode

For all Read instructions, the device waits, after each byte read, for an acknowledgment during the 9th bit time. If the bus master does not drive Serial Data (SDA) Low during this time, the device terminates the data transfer and switches to its Standby mode.

4 Initial delivery state

The device is delivered with all bits in the memory array set to 1 (each byte contains FFh).

5 Maximum rating

Stressing the device outside the ratings listed in *Table 7* may cause permanent damage to the device. These are stress ratings only, and operation of the device at these, or any other conditions outside those indicated in the operating sections of this specification, is not implied. Exposure to absolute maximum rating conditions for extended periods may affect device reliability.

Table 7. Absolute maximum ratings

Symbol	Parameter	Min.	Max.	Unit
	Ambient temperature with power applied	–55	130	°C
T_{STG}	Storage temperature	–65	150	°C
T_{LEAD}	Lead temperature during soldering	See note (1)		°C
V_{IO}	Input or output range	–0.50	6.5	V
V_{CC}	Supply voltage	–0.50	6.5	V
I_{OL}	DC output current (SDA = 0)		5	mA
V_{ESD}	Electrostatic discharge voltage (human body model) (2)	–3000	3000	V

1. Compliant with JEDEC Std J-STD-020D (for small body, Sn-Pb or Pb assembly), the ST ECOPACK® 7191395 specification, and the European directive on the restriction of the use of certain hazardous substances in electrical and electronic equipment (RoHS) 2002/95/EC.
2. AEC-Q100-002 (compliant with JEDEC Std JESD22-A114, C1 = 100 pF, R1 = 1500 Ω, R2 = 500 Ω)

6 DC and AC parameters

This section summarizes the operating and measurement conditions, and the dc and ac characteristics of the device. The parameters in the DC and AC characteristic tables that follow are derived from tests performed under the measurement conditions summarized in the relevant tables. Designers should check that the operating conditions in their circuit match the measurement conditions when relying on the quoted parameters.

Table 8. Operating conditions (voltage range W)

Symbol	Parameter	Min.	Max.	Unit
V_{CC}	Supply voltage	2.5	5.5	V
T_A	Ambient operating temperature (device grade 6)	–40	85	°C
	Ambient operating temperature (device grade 3)	–40	125	°C

Table 9. Operating conditions (voltage range R)

Symbol	Parameter	Min.	Max.	Unit
V_{CC}	Supply voltage	1.8	5.5	V
T_A	Ambient operating temperature	–40	85	°C

Table 10. AC test measurement conditions

Symbol	Parameter	Min.	Max.	Unit
C_{bus}	Load capacitance	100		pF
	SCL input rise/fall time, SDA input fall time		50	ns
	Input levels	$0.2V_{CC}$ to $0.8V_{CC}$		V
	Input and output timing reference levels	$0.3V_{CC}$ to $0.7V_{CC}$		V

Figure 12. AC test measurement I/O waveform

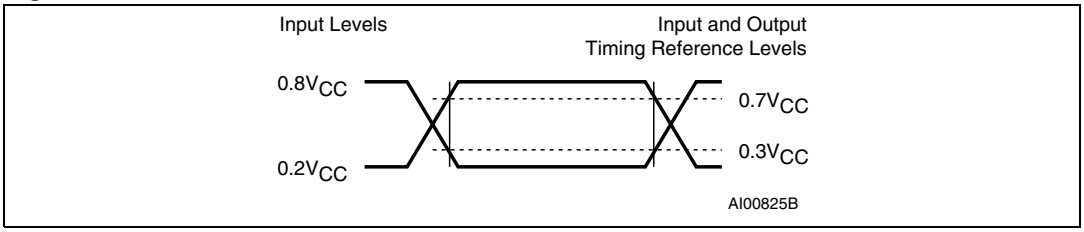

Table 11. Input parameters

Symbol	Parameter(1)	Test condition	Min.	Max.	Unit
C_{IN}	Input capacitance (SDA)			8	pF
C_{IN}	Input capacitance (other pins)			6	pF
Z_L(2)	Input impedance (E2, E1, E0, $\overline{WC}$)	$V_{IN} < 0.3V_{CC}$	30		kΩ
Z_H(2)	Input impedance (E2, E1, E0, $\overline{WC}$)	$V_{IN} > 0.7V_{CC}$	500		kΩ

1. Sampled only, not 100% tested.
2. E2,E1,E0: Input impedance when the memory is selected (after a Start condition).

Table 12. DC characteristics (voltage range W)

Symbol	Parameter	Test conditions (see *Table 8* and *Table 10*)		Min.	Max.	Unit
I_{LI}	Input leakage current (SCL, SDA, E0, E1, E2)	$V_{IN} = V_{SS}$ or V_{CC} device in Standby mode			± 2	µA
I_{LO}	Output leakage current	SDA in Hi-Z, external voltage applied on SDA: V_{SS} or V_{CC}			± 2	µA
I_{CC}	Supply current (Read)	V_{CC} = 2.5 V, f_c = 400 kHz (rise/fall time < 50 ns)			1.5	mA
		V_{CC} = 5.5 V, f_c = 400 kHz (rise/fall time < 50 ns)			2	mA
		2.5 V < V_{CC} < 5.5 V, f_c = 1 MHz (rise/fall time < 50 ns)			2.5	mA
I_{CC0}	Supply current (Write)	During t_W, 2.5 V < V_{CC} < 5.5 V			5(1)	mA
I_{CC1}	Standby supply current	Device not selected(2), $V_{IN} = V_{SS}$ or V_{CC}, V_{CC} = 2.5 V	Device grade 3		5	µA
			Device grade 6		2	
		$V_{IN} = V_{SS}$ or V_{CC}, V_{CC} = 5.5 V			3	µA
V_{IL}	Input low voltage (SCL, SDA, $\overline{WC}$)			–0.45	$0.3V_{CC}$	V
V_{IH}	Input high voltage (SCL, SDA)			$0.7V_{CC}$	6.5	V
	Input high voltage ($\overline{WC}$, E0, E1, E2)			$0.7V_{CC}$	V_{CC}+0.6	
V_{OL}	Output low voltage	I_{OL} = 2.1 mA, V_{CC} = 2.5 V or I_{OL} = 3 mA, V_{CC} = 5.5 V			0.4	V

1. Characterized value, not tested in production.
2. The device is not selected after power-up, after a Read instruction (after the Stop condition), or after the completion of the internal write cycle t_W (t_W is triggered by the correct decoding of a Write instruction).

Table 13. DC characteristics (voltage range R)

Symbol	Parameter	Test conditions (in addition to those in *Table 9* and *Table 10*)(1)	Min.	Max.	Unit
I_{LI}	Input leakage current (E1, E2, SCL, SDA)	$V_{IN} = V_{SS}$ or V_{CC} device in Standby mode		± 2	µA
I_{LO}	Output leakage current	SDA in Hi-Z, external voltage applied on SDA: V_{SS} or V_{CC}		± 2	µA
I_{CC}	Supply current (Read)	V_{CC} = 1.8 V, f_c= 400 kHz (rise/fall time < 50 ns)		1.5	mA
		V_{CC} = 1.8 V, f_c= 1 MHz (rise/fall time < 50 ns)		2.5	mA
I_{CC0}	Supply current (Write)	During t_W, V_{CC} = 1.8 V,		5(2)	mA
I_{CC1}	Standby supply current	Device not selected(3), $V_{IN} = V_{SS}$ or V_{CC}, V_{CC} = 1.8 V		1	µA
V_{IL}	Input low voltage (SCL, SDA, $\overline{WC}$)	1.8 V ≤ V_{CC} < 2.5 V	–0.45	0.25 V_{CC}	V
V_{IH}	Input high voltage (SCL, SDA)	1.8 V ≤ V_{CC} < 2.5 V	0.75V_{CC}	6.5	V
	Input high voltage ($\overline{WC}$, E0, E1, E2)	1.8 V ≤ V_{CC} < 2.5 V	0.75V_{CC}	V_{CC}+0.6	V
V_{OL}	Output low voltage	I_{OL} = 1 mA, V_{CC} = 1.8 V		0.2	V

1. If the application uses the voltage range R device within 2.5<V_{CC}<5.5 V and -40°C<T_A<85°C, please refer to *Table 12: DC characteristics (voltage range W)* instead of this table.
2. Characterized value, not tested in production.
3. The device is not selected after power-up, after a Read instruction (after the Stop condition), or after the completion of the internal write cycle t_W (t_W is triggered by the correct decoding of a Write instruction).

Table 14. 400 kHz AC characteristics

Test conditions specified in *Table 8*, *Table 9* and *Table 10*					
Symbol	**Alt.**	**Parameter**	**Min.(1)**	**Max.(1)**	**Unit**
f_C	f_{SCL}	Clock frequency		400	kHz
t_{CHCL}	t_{HIGH}	Clock pulse width high	600		ns
t_{CLCH}	t_{LOW}	Clock pulse width low	1300		ns
t_{QL1QL2}(2)	t_F	SDA (out) fall time	20(3)	120	ns
t_{XH1XH2}	t_R	Input signal rise time	(4)	(4)	ns
t_{XL1XL2}	t_F	Input signal fall time	(4)	(4)	ns
t_{DXCX}	$t_{SU:DAT}$	Data in set up time	100		ns
t_{CLDX}	$t_{HD:DAT}$	Data in hold time	0		ns
t_{CLQX}(5)	t_{DH}	Data out hold time	50		ns
t_{CLQV}(6)	t_{AA}	Clock low to next data valid (access time)	50	900	ns
t_{CHDL}	$t_{SU:STA}$	Start condition setup time	600		ns
t_{DLCL}	$t_{HD:STA}$	Start condition hold time	600		ns
t_{CHDH}	$t_{SU:STO}$	Stop condition set up time	600		ns
t_{DHDL}	t_{BUF}	Time between Stop condition and next Start condition	1300		ns
t_W	t_{WR}	Write time		10	ms
t_{NS}(2)		Pulse width ignored (input filter on SCL and SDA) - single glitch		50	ns

1. All values are referred to V_{IL}(max) and V_{IH}(min).
2. Characterized only, not tested in production.
3. With C_L = 10 pF.
4. There is no min. or max. values for the input signal rise and fall times. It is however recommended by the I²C specification that the input signal rise and fall times be less than 120 ns when f_C < 1 MHz..
5. The I²C-bus specification does not define a min value for the data hold time (tHD;DAT). The min value for t_{CLQX} (Data out hold time) of the M24xxx devices offers a safe timing to bridge the undefined region of the falling edge SCL.
6. t_{CLQV} is the time (from the falling edge of SCL) required by the SDA bus line to reach either 0.3 V_{CC} or 0.7 V_{CC}, assuming that $R_{bus} \times C_{bus}$ time constant is within the values specified in *Figure 6*.

Table 15. 1 MHz AC characteristics(1)

Test conditions specified in *Table 9* and *Table 10*					
Symbol	**Alt.**	**Parameter**	**Min.(2)**	**Max.(2)**	**Unit**
f_C	f_{SCL}	Clock frequency	0	1	MHz
t_{CHCL}	t_{HIGH}	Clock pulse width high	300	-	ns
t_{CLCH}	t_{LOW}	Clock pulse width low	400	-	ns
t_{XH1XH2}	t_R	Input signal rise time	(3)	(3)	ns
t_{XL1XL2}	t_F	Input signal fall time	(3)	(3)	ns
t_{QL1QL2}(4)	t_F	SDA (out) fall time	-	120	ns
t_{DXCX}	$t_{SU:DAT}$	Data in setup time	80	-	ns
t_{CLDX}	$t_{HD:DAT}$	Data in hold time	0	-	ns
t_{CLQX}(5)	t_{DH}	Data out hold time	50	-	ns
t_{CLQV}(6)	t_{AA}	Clock low to next data valid (access time)	50	500	ns
t_{CHDL}	$t_{SU:STA}$	Start condition setup time	250	-	ns
t_{DLCL}	$t_{HD:STA}$	Start condition hold time	250	-	ns
t_{CHDH}	$t_{SU:STO}$	Stop condition setup time	250	-	ns
t_{DHDL}	t_{BUF}	Time between Stop condition and next Start condition	500	-	ns
t_W	t_{WR}	Write time	-	10	ms
t_{NS}(4)		Pulse width ignored (input filter on SCL and SDA)	-	50	ns

1. Only new devices identified by the process letter K are qualified at 1 MHz (refer to TN0440 for more information).
2. All values are referred to V_{IL}(max) and V_{IH}(min).
3. There is no min. or max. values for the input signal rise and fall times. It is however recommended by the I²C specification that the input signal rise and fall times be less than 120 ns when fC < 1 MHz.
4. Characterized only, not tested in production.
5. The I²C-bus specification does not define a min value of the data hold time ($t_{HD:DAT}$). The min value of t_{CLQX} (Data out hold time) of the M24xxx devices offers a safe timing to bridge the undefined region of the falling edge SCL.
6. t_{CLQV} is the time (from the falling edge of SCL) required by the SDA bus line to reach either $0.3V_{CC}$ or $0.7V_{CC}$, assuming that the $R_{bus} \times C_{bus}$ time constant is within the values specified in *Figure 6*.

Figure 13. AC timings

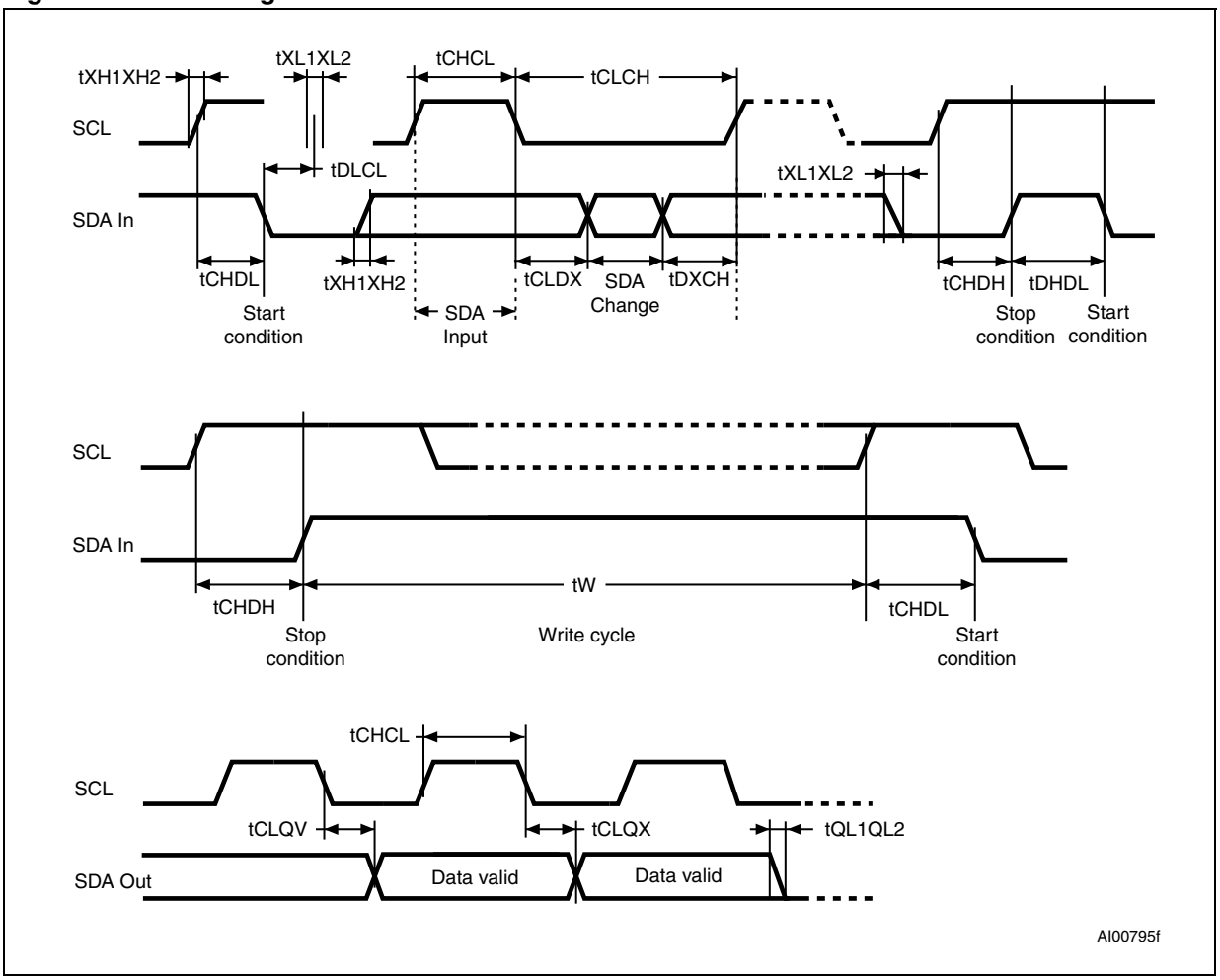

7 Package mechanical data

In order to meet environmental requirements, ST offers these devices in different grades of ECOPACK® packages, depending on their level of environmental compliance. ECOPACK® specifications, grade definitions and product status are available at: *www.st.com*. ECOPACK® is an ST trademark.

Figure 14. SO8W – 8-lead plastic small outline, 208 mils body width, package outline

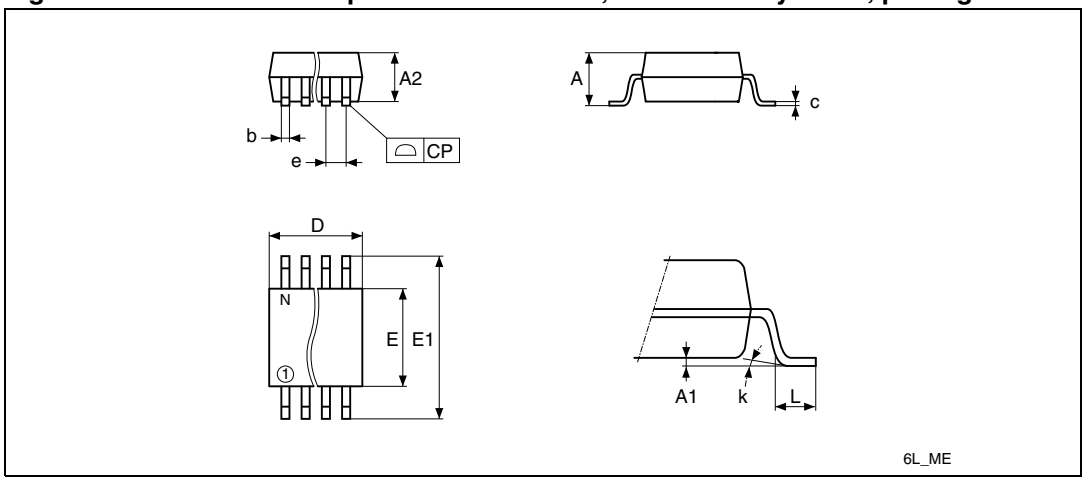

1. Drawing is not to scale.

Table 16. SO8W – 8-lead plastic small outline, 208 mils body width, package data

Symbol	millimeters			inches[1]		
	Typ	Min	Max	Typ	Min	Max
A			2.5			0.0984
A1		0	0.25		0	0.0098
A2		1.51	2		0.0594	0.0787
b	0.4	0.35	0.51	0.0157	0.0138	0.0201
c	0.2	0.1	0.35	0.0079	0.0039	0.0138
CP			0.1			0.0039
D			6.05			0.2382
E		5.02	6.22		0.1976	0.2449
E1		7.62	8.89		0.3	0.35
e	1.27	-	-	0.05	-	-
k		0°	10°		0°	10°
L		0.5	0.8		0.0197	0.0315
N (number of pins)	8			8		

1. Values in inches are converted from mm and rounded to 4 decimal digits.

Figure 15. SO8N – 8-lead plastic small outline, 150 mils body width, package outline

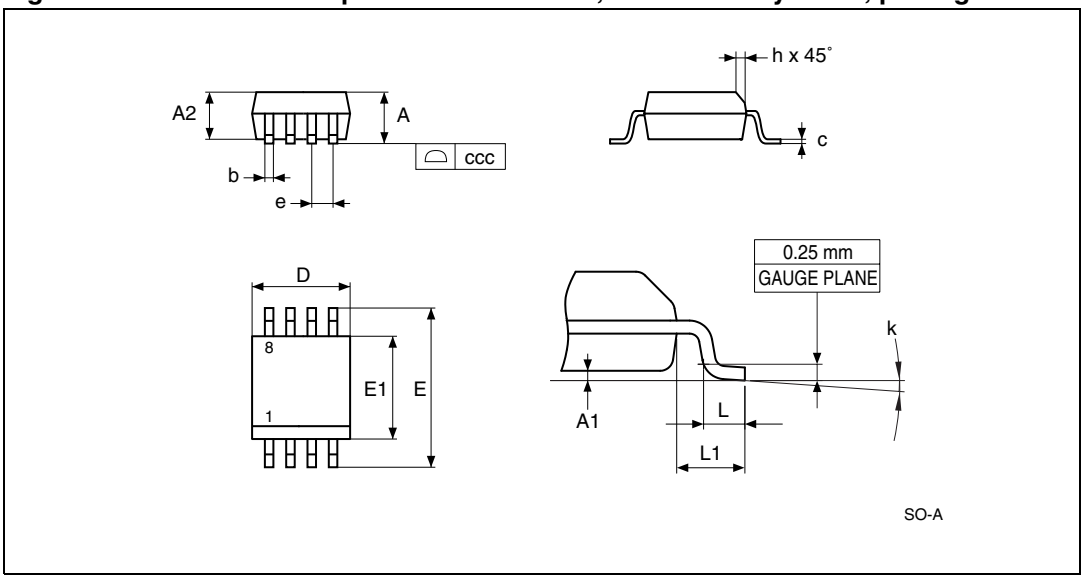

1. Drawing is not to scale.

Table 17. SO8N – 8-lead plastic small outline, 150 mils body width, package mechanical data

Symbol	millimeters			inches[1]		
	Typ	Min	Max	Typ	Min	Max
A			1.75			0.0689
A1		0.1	0.25		0.0039	0.0098
A2		1.25			0.0492	
b		0.28	0.48		0.011	0.0189
c		0.17	0.23		0.0067	0.0091
ccc			0.1			0.0039
D	4.9	4.8	5	0.1929	0.189	0.1969
E	6	5.8	6.2	0.2362	0.2283	0.2441
E1	3.9	3.8	4	0.1535	0.1496	0.1575
e	1.27	-	-	0.05	-	-
h		0.25	0.5		0.0098	0.0197
k		0°	8°		0°	8°
L		0.4	1.27		0.0157	0.05
L1	1.04			0.0409		

1. Values in inches are converted from mm and rounded to 4 decimal digits.

Figure 16. TSSOP8 – 8-lead thin shrink small outline, package outline

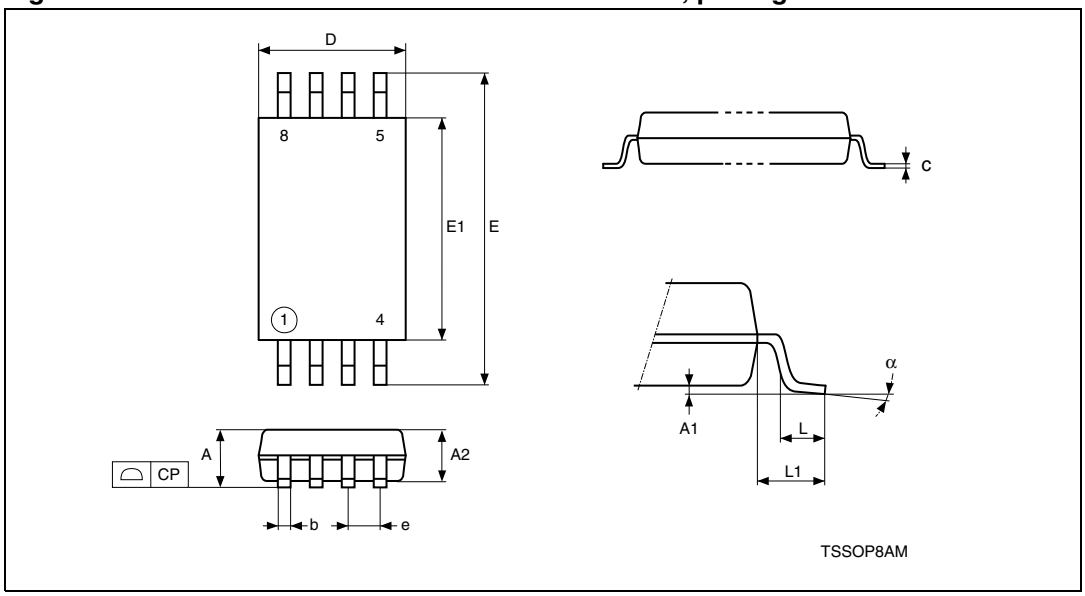

1. Drawing is not to scale.

Table 18. TSSOP8 – 8-lead thin shrink small outline, package mechanical data

Symbol	millimeters			inches[1]		
	Typ	Min	Max	Typ	Min	Max
A			1.200			0.0472
A1		0.050	0.150		0.0020	0.0059
A2	1.000	0.800	1.050	0.0394	0.0315	0.0413
b		0.190	0.300		0.0075	0.0118
c		0.090	0.200		0.0035	0.0079
CP			0.100			0.0039
D	3.000	2.900	3.100	0.1181	0.1142	0.1220
e	0.650	–	–	0.0256	–	–
E	6.400	6.200	6.600	0.2520	0.2441	0.2598
E1	4.400	4.300	4.500	0.1732	0.1693	0.1772
L	0.600	0.450	0.750	0.0236	0.0177	0.0295
L1	1.000			0.0394		
α		0°	8°		0°	8°
N	8			8		

1. Values in inches are converted from mm and rounded to 4 decimal digits.

Figure 17. UFDFPN8 (MLP8) 8-lead ultra thin fine pitch dual flat package no lead 2 x 3 mm, outline

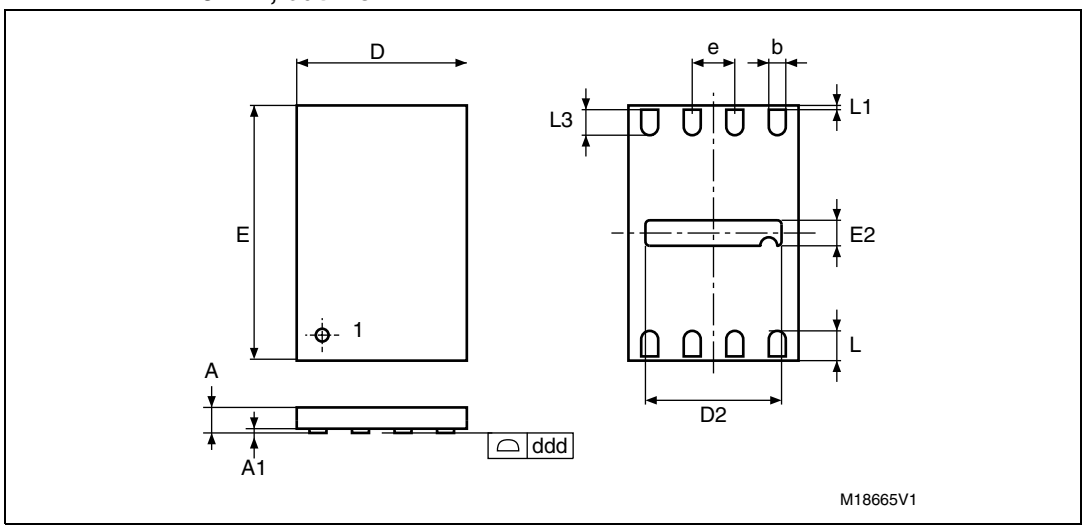

1. Drawing is not to scale.
2. The central pad (the area E2 by D2 in the above illustration) is pulled, internally, to V_{SS}. It must not be allowed to be connected to any other voltage or signal line on the PCB, for example during the soldering process.
3. The circle in the top view of the package indicates the position of pin 1.

Table 19. UFDFPN8 (MLP8) 8-lead ultra thin fine pitch dual flat package no lead 2 x 3 mm, data

Symbol	millimeters			inches[1]		
	Typ	Min	Max	Typ	Min	Max
A	0.55	0.45	0.6	0.0217	0.0177	0.0236
A1	0.02	0	0.05	0.0008	0	0.002
b	0.25	0.2	0.3	0.0098	0.0079	0.0118
D	2	1.9	2.1	0.0787	0.0748	0.0827
D2	1.6	1.5	1.7	0.063	0.0591	0.0669
E	3	2.9	3.1	0.1181	0.1142	0.122
E2	0.2	0.1	0.3	0.0079	0.0039	0.0118
e	0.5	-	-	0.0197	-	-
L	0.45	0.4	0.5	0.0177	0.0157	0.0197
L1			0.15			0.0059
L3		0.3			0.0118	
ddd[2]	0.08			0.08		

1. Values in inches are converted from mm and rounded to 4 decimal digits.
2. Applied for exposed die paddle and terminals. Exclude embedding part of exposed die paddle from measuring.

Figure 18. WLCSP-R 8 bumps, outline

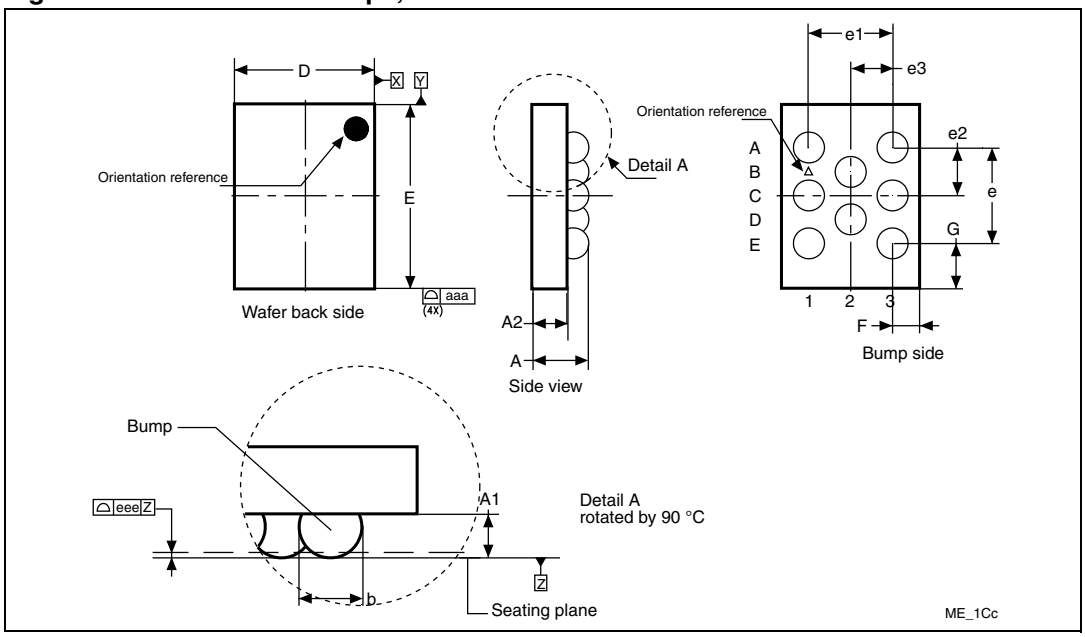

Table 20. WLCSP-R 8 bumps, data

Symbol	millimeters			inches(1)		
	Typ	Min	Max	Typ	Min	Max
A	0.580	0.490	0.670	0.0228	0.0193	0.0264
A1	0.230			0.0091		
A2	0.350			0.0138		
b(2)	0.322			0.0127		
D	1.433		1.548	0.0564		0.0609
E	1.901		2.016	0.0748		0.0794
e	1.000			0.0394		
e1	0.866			0.0341		
e2	0.500			0.0197		
e3	0.433			0.0170		
F	0.284			0.0112		
G	0.453			0.0178		
N(3)	8			8		
	Tolerance (mm)			Tolerance (inches)		
aaa	0.110			0.0043		
eee	0.060			0.0024		

1. Values in inches are converted from mm and rounded to 4 decimal digits.
2. Dimension is measured at the maximum bump diameter parallel to primary datum Z.
3. N is the total number of terminals.

8 Part numbering

Table 21. Ordering information scheme

Example: M24512– W MW 6 T P /AB

Device type
M24 = I^2C serial access EEPROM

Device function
512– = 512 Kbit (64 Kb × 8)

Device family
Blank: Without Identification page
D: With additional Identification page

Operating voltage
W = V_{CC} = 2.5 to 5.5 V
R = V_{CC} = 1.8 to 5.5 V

Package
MW = SO8 (208 mils width)
MN = SO8 (150 mils body width)
DW = TSSOP8
MB = UFDFPN8
CS = WLCSP

Device grade
6 = Industrial temperature range, –40 to 85 °C. Device tested with standard test flow
3 = Automotive: device tested with high reliability certified flow(1)
over –40 to 125 °C

Option
blank = standard packing
T = tape and reel packing

Plating technology
P or G = ECOPACK® (RoHS compliant)

Process(2)
/AB = F8L process (for device grade 3)
/K = F8H process

1. ST strongly recommends the use of the Automotive Grade devices for use in an automotive environment. The High Reliability Certified Flow (HRCF) is described in the quality note QNEE9801. Please ask your nearest ST sales office for a copy.
2. Used only for device grade 3 or WLCSP package.

For a list of available options (speed, package, etc.) or for further information on any aspect of this device, please contact your nearest ST sales office.

Table 22. Available M24512-W and M24512-R products (package, voltage range, temperature grade)

Package	M24512-W 2.5 V to 5.5 V	M24512-R 1.8 V to 5.5 V
SO8N (MN)	Range 6, Range 3	Range 6
SO8W (MW)	Range 6	-
TSSOP (DW)	Range 6	Range 6
UFDFPN8 (MB)	-	Range 6
WLCSP (CS)	-	Range 6

Table 23. Available M24512-DR products (package, voltage range, temperature grade)

Package	M24512-DR 1.8 V to 5.5 V
SO8N (MN)	Range 6
TSSOP (DW)	Range 6
UFDFPN8 (MB)	Range 6

9 Revision history

Table 24. Document revision history

Date	Revision	Changes
29-Jan-2001	1.1	Lead Soldering Temperature in the Absolute Maximum Ratings table amended Write Cycle Polling Flow Chart using ACK illustration updated LGA8 and SO8(wide) packages added References to PSDIP8 changed to PDIP8, and Package Mechanical data updated
10-Apr-2001	1.2	LGA8 Package Mechanical data and illustration updated SO16 package removed
16-Jul-2001	1.3	LGA8 Package given the designator “LA”
02-Oct-2001	1.4	LGA8 Package mechanical data updated
13-Dec-2001	1.5	Document becomes Preliminary Data Test conditions for ILI, ILO, ZL and ZH made more precise VIL and VIH values unified. tNS value changed
12-Jun-2001	1.6	Document promoted to Full Datasheet
22-Oct-2003	2.0	Table of contents, and Pb-free options added. Minor wording changes in Summary Description, Power-On Reset, Memory Addressing, Write Operations, Read Operations. V_{IL}(min) improved to –0.45V.
02-Sep-2004	3.0	LGA8 package is Not for New Design. 5V and -S supply ranges, and Device Grade 5 removed. Absolute Maximum Ratings for V_{IO}(min) and V_{CC}(min) changed. Soldering temperature information clarified for RoHS compliant devices. Device grade information clarified. AEC-Q100-002 compliance. V_{IL} specification unified for SDA, SCL and WC
22-Feb-2005	4.0	*Initial delivery state* is FFh (not necessarily the same as Erased). LGA package removed, TSSOP8 and SO8N packages added (see *Package mechanical data* section and *Table 21: Ordering information scheme*). Voltage range R (1.8V to 5.5V) also offered. Minor wording changes. Z_L Test Conditions modified in *Table 11: Input parameters* and Note *2* added. I_{CC} and I_{CC1} values for V_{CC} = 5.5V added to *Table 12: DC characteristics (voltage range W)*. Note added to *Table 12: DC characteristics (voltage range W)*. *Power On Reset* paragraph specified. t_W max value modified in *Table 14: 400 kHz AC characteristics* and note 4 added. Plating technology changed in *Table 21: Ordering information scheme*. Resistance and capacitance renamed in *Figure 6*.

Table 24. Document revision history (continued)

Date	Revision	Changes
05-May-2006	5	*Power On Reset* paragraph replaced by *Section 2.6: Supply voltage (VCC)*. *Figure 4: Device select code* added. *ECC (error correction code) and write cycling* added and specified at 1 Million cycles. I_{CC0} added and I_{CC1} specified over the whole voltage range in *Table 12* and *Table 13*. PDIP8 package removed. Packages are ECOPACK® compliant. Small text changes.
16-Oct-2006	6	M24256-BW and M24256-BR part numbers added. *Section 3.12: ECC (error correction code) and write cycling* updated. I_{CC} and I_{CC1} modified in *Table 13: DC characteristics (voltage range R)*. t_W modified in *Table 14: 400 kHz AC characteristics*. SO8Narrow package specifications updated (see *Table 17* and *Figure 15*). Blank option removed from below *Plating technology* in *Table 21: Ordering information scheme*.
02-Jul-2007	7	*Section 2.6: Supply voltage (VCC)* modified. *Section 3.12: ECC (error correction code) and write cycling* modified. JEDEC standard and European directive references corrected below *Table 7: Absolute maximum ratings*. Rise/fall time conditions modified for I_{CC} and V_{IH} max modified in *Table 12: DC characteristics (voltage range W)* and *Table 13: DC characteristics (voltage range R)* Note 1 removed from *Table 12: DC characteristics (voltage range W)*. SO8W package specifications modified in *Section 7: Package mechanical data*. *Table 23: Available M24256-BR, M24256-BW, M24256-BF products (package, voltage range, temperature grade)* and *Table 26: Available M24512-x products (package, voltage range, temperature grade)* added.
16-Oct-2007	8	*Section 2.5: VSS ground* added. Small text changes. V_{IO} max changed and *Note 1* updated to latest standard revision in *Table 7: Absolute maximum ratings*. Note removed from *Table 11: Input parameters*. V_{IH} min and V_{IL} max modified in *Table 13: DC characteristics (voltage range R)*. Removed t_{CH1CH2}, t_{CL1CL2} and t_{DH1DH2}, and added t_{XL1XL2}, t_{DL1DL2} and *Note 3* in *Table 14: 400 kHz AC characteristics*. t_{XH1XH2}, t_{XL1XL2} and *Note 2* added to *Table 15: 1 MHz AC characteristics*. *Figure 13: AC timings* modified. Package mechanical data inch values calculated from mm and rounded to 4 decimal digits (see *Section 7: Package mechanical data*).

Table 24. Document revision history (continued)

Date	Revision	Changes
14-Dec-2007	9	1 MHz frequency introduced (M24512-HR root part number). *Section 2.6.3: Device reset* modified. *Figure 5: I2C Fast mode (fC = 400 kHz): maximum Rbus value versus bus parasitic capacitance (Cbus)* modified, *Figure 6: I2C Fast mode Plus (fC = 1 MHz): maximum Rbus value versus bus parasitic capacitance (Cbus)* added. t_{NS} moved from *Table 11* to *Table 14*. I_{LO} test conditions modified in *Table 12*. *Table 13: DC characteristics (voltage range R)* and *Table 15: 1 MHz AC characteristics* modified. Small text changes.
27-Mar-2008	10	Small text changes. M24256-BHR root part number added. *Section 2.6.3: Device reset on page 9* updated. *Figure 6: I2C Fast mode Plus (fC = 1 MHz): maximum Rbus value versus bus parasitic capacitance (Cbus) on page 10* updated. Caution removed in *Section 3.12: ECC (error correction code) and write cycling*.
22-Apr-2008	11	M24512-W and M24256-BW offered in the device grade 3 option (automotive temperature range): – *Table 8: Operating conditions (voltage range W)*, – *Table 12: DC characteristics (voltage range W)*, – /AB Process letters added to *Table 21: Ordering information scheme*, – *Table 23: Available M24256-BR, M24256-BW, M24256-BF products (package, voltage range, temperature grade)* and – *Table 26: Available M24512-x products (package, voltage range, temperature grade)* updated accordingly). Small text changes.
22-Dec-2008	12	WLCSP package added (see *Figure 3: WLCSP connections (top view, marking side, with balls on the underside)* and *Section 7: Package mechanical data*).
21-Jan-2009	13	M24256-BF part number added (V_{CC} = 1.7 V to 5.5 V voltage range added, see *Table 10*, *Table 14* and Table 23). I_{CC1} test conditions modified in *Table 12: DC characteristics (voltage range W)*, *Table 13: DC characteristics (voltage range R)* and *Table 14: DC characteristics (voltage range F)*.
05-Jun-2009	14	M24512-DR part number and Identification page feature added. Command replaced by instruction in the whole document. UFDFPN8 added. *Figure 6* updated. *Section 2.6.2: Power-up conditions* and *Section 2.6.3: Device reset* updated. t_{CLQX} and t_{CLQV} updated in *Table 14*, *Note 6* and *Note 8* added. t_{CLQX} and t_{CLQV} updated in *Table 15*, *Note 5* and *Note 8* added. *Section 8: Part numbering* updated. Reference to the SURE program removed in *Section 5: Maximum rating*. Previous 1 MHz M24512-HR and M24512-BHR devices replaced by new M24512-R and M24256-BR (process letter K).

Table 24. Document revision history (continued)

Date	Revision	Changes
16-Jun-2009	15	Part numbers updated in cover page header.
20-Aug-2009	16	I_{OL} added to *Table 8: Operating conditions (voltage range W)*. *Note 1* and I_{CC} modified in *Table 12: DC characteristics (voltage range W)*; *Note 2* and I_{CC} modified in *Table 13: DC characteristics (voltage range R)*;
13-Oct-2009	17	Datasheet split to leave only devices with 512 Kbit capacity. *Figure 4: Device select code* and *Figure 5: I2C Fast mode (fC = 400 kHz): maximum Rbus value versus bus parasitic capacitance (Cbus)* updated. V_{IO} max modified in *Table 7: Absolute maximum ratings*. V_{IH} modified in *Table 12: DC characteristics (voltage range W)*, *Table 13: DC characteristics (voltage range R)* and *Table 14: DC characteristics (voltage range F)*. In *Table 14: 400 kHz AC characteristics* and *Table 15: 1 MHz AC characteristics*: – t_{DL1DL2} changed to t_{QL1QL2} – t_{CHDX} changed to t_{CHDL} – t_{XH1XH2} and t_{XL1XL2} values removed – Notes modified *Figure 13: AC timings* modified.
05-Nov-2009	18	*Section 3.10: Write Identification Page (M24512-DR only)* corrected. *Section 3.18: Read Identification Page (M24512-D only)* clarified.
01-Jun-2010	19	Clarified cover page. *Section 1: Description* inserted paragraph clarifying Identification Page. *Section 3.1: Start condition* clarified. *Section 3.7: Write operations* clarified. *Section 3.10: Write Identification Page (M24512-DR only)* clarified. *Section 3.18: Read Identification Page (M24512-D only)* paragraph updated. *Table 7: Absolute maximum ratings* updated. *Table 10: AC test measurement conditions* updated. *Table 12: DC characteristics (voltage range W)* updated. *Table 13: DC characteristics (voltage range R)* updated. *Table 14: DC characteristics (voltage range F)* table deleted.
28-Sep-2010	20	Re-ordered *Features* content. WLCSP package information added in *Figure 3*. Text updated in *Section 3.10*, *Section 3.18*. Updated *Figure 13.* Added *Figure 18*, *Table 20*.
21-Dec-2010	21	Updated *Features*, *Section 1: Description*, *Section 3.12: ECC (error correction code) and write cycling*, title of sections *3.18* and *3.19*, *Table 12: DC characteristics (voltage range W)*, *Table 13: DC characteristics (voltage range R)*, *Table 14: 400 kHz AC characteristics* and *Table 15: 1 MHz AC characteristics*, *Figure 17: UFDFPN8 (MLP8) 8-lead ultra thin fine pitch dual flat package no lead 2 x 3 mm, outline*. Added Caution under *Figure 3*.

Please Read Carefully:

Information in this document is provided solely in connection with ST products. STMicroelectronics NV and its subsidiaries (“ST”) reserve the right to make changes, corrections, modifications or improvements, to this document, and the products and services described herein at any time, without notice.

All ST products are sold pursuant to ST’s terms and conditions of sale.

Purchasers are solely responsible for the choice, selection and use of the ST products and services described herein, and ST assumes no liability whatsoever relating to the choice, selection or use of the ST products and services described herein.

No license, express or implied, by estoppel or otherwise, to any intellectual property rights is granted under this document. If any part of this document refers to any third party products or services it shall not be deemed a license grant by ST for the use of such third party products or services, or any intellectual property contained therein or considered as a warranty covering the use in any manner whatsoever of such third party products or services or any intellectual property contained therein.

UNLESS OTHERWISE SET FORTH IN ST’S TERMS AND CONDITIONS OF SALE ST DISCLAIMS ANY EXPRESS OR IMPLIED WARRANTY WITH RESPECT TO THE USE AND/OR SALE OF ST PRODUCTS INCLUDING WITHOUT LIMITATION IMPLIED WARRANTIES OF MERCHANTABILITY, FITNESS FOR A PARTICULAR PURPOSE (AND THEIR EQUIVALENTS UNDER THE LAWS OF ANY JURISDICTION), OR INFRINGEMENT OF ANY PATENT, COPYRIGHT OR OTHER INTELLECTUAL PROPERTY RIGHT.

UNLESS EXPRESSLY APPROVED IN WRITING BY AN AUTHORIZED ST REPRESENTATIVE, ST PRODUCTS ARE NOT RECOMMENDED, AUTHORIZED OR WARRANTED FOR USE IN MILITARY, AIR CRAFT, SPACE, LIFE SAVING, OR LIFE SUSTAINING APPLICATIONS, NOR IN PRODUCTS OR SYSTEMS WHERE FAILURE OR MALFUNCTION MAY RESULT IN PERSONAL INJURY, DEATH, OR SEVERE PROPERTY OR ENVIRONMENTAL DAMAGE. ST PRODUCTS WHICH ARE NOT SPECIFIED AS "AUTOMOTIVE GRADE" MAY ONLY BE USED IN AUTOMOTIVE APPLICATIONS AT USER’S OWN RISK.

Resale of ST products with provisions different from the statements and/or technical features set forth in this document shall immediately void any warranty granted by ST for the ST product or service described herein and shall not create or extend in any manner whatsoever, any liability of ST.

ST and the ST logo are trademarks or registered trademarks of ST in various countries.

Information in this document supersedes and replaces all information previously supplied.

The ST logo is a registered trademark of STMicroelectronics. All other names are the property of their respective owners.

© 2010 STMicroelectronics - All rights reserved

STMicroelectronics group of companies

Australia - Belgium - Brazil - Canada - China - Czech Republic - Finland - France - Germany - Hong Kong - India - Israel - Italy - Japan - Malaysia - Malta - Morocco - Philippines - Singapore - Spain - Sweden - Switzerland - United Kingdom - United States of America

www.st.com