Test Sockets

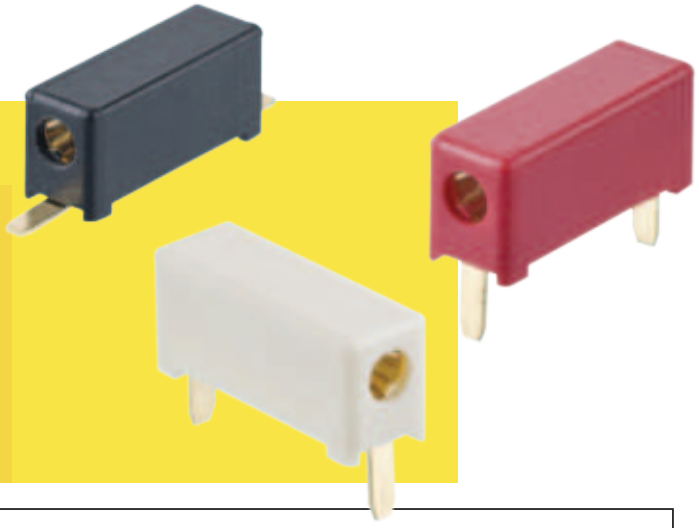

Ø2mm Mating Pin

- Dual entry horizontal sockets with gold plated contacts.
- Colour coded options available.
- Surface Mount product features a flat top area, and is available in tape and reel packaging for automated assembly, using standard pick and place machines.
- 5A current rating and 1,500V voltage rating.
- Please consult drawings for further specifications.

SURFACE MOUNT

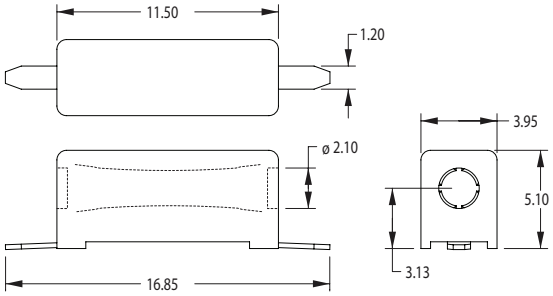

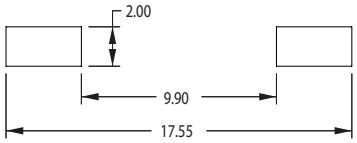

Recommended PC Board Pattern

PC TAIL / THROUGHBOARD

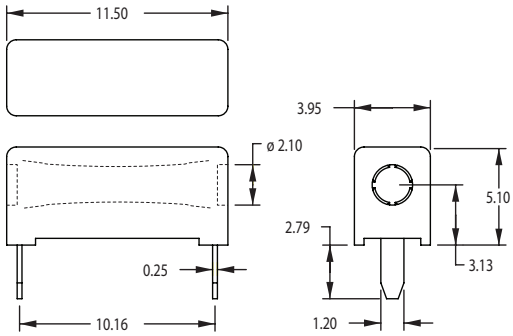

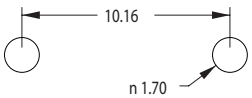

Recommended PC Board Pattern

HOW TO ORDER

M349 X-XX X

SERIES CODE

TYPE	
7	Surface Mount
8	PC Tail / Throughboard

PACKAGING	
Blank	Loose
R	Tape & Reeled (M3497 only)

BODY COLOUR	
94	White (M3498 only)
98	Black
99	Red (M3498 only)

All dimensions in mm.