Click here to ask about the production status of specific part numbers.

MAX16143/MAX16145/ MAX16147/MAX16149

High-Voltage Supervisors with Manual Reset Input

General Description

The MAX16143, MAX16145, MAX16147, and MAX16149 are supervisory circuits that monitor their own supply voltages using a factory-set reset threshold that ranges from +3.3V to +11.6V. A manual reset (MR or $\overline{MR}$) input is included. The RESET (or $\overline{RESET}$) output has options for active-low, active-high, push-pull, or open-drain. The reset output asserts when the monitored voltage falls below the threshold voltage, and remains asserted until the monitored voltage has exceeded its threshold (plus hysteresis) for a time equal to the factory-set reset timeout period. Available reset timeout periods range from 30µs to 4.2s.

The 5-pin SOT23 and 4-bump wafer-level packages (WLPs) offer compatibility with space-constrained environments. These ICs are fully specified over the -40°C to +125°C temperature range.

Applications

- Servers
- Communications Equipment
- Industrial Equipment

Benefits and Features

- Factory-Set Reset Threshold Options from +3.3V to +11.6V
- Manual Reset Input
  - Active-High and Active-Low Trigger Options
  - Optional Internal Pullup or Pulldown
  - Fast (45µs) and Slow (50ms) Debounce Time Options
- Guaranteed Reset Valid to V_{CC} ≥ 1.3V
- Push-Pull and Open-Drain Reset Output Options
  - MAX16143: Open-Drain, Active-Low
  - MAX16145: Open-Drain, Active-High
  - MAX16147: Push-Pull, Active-Low
  - MAX16149: Push-Pull, Active-High
- Power-Supply Transient Immunity
- -40°C to +125°C Operating Temperature Range
- SOT23-5 Package and 4-Bump WLPs

***Ordering Information* appears at end of data sheet.**

Simplified Block Diagram

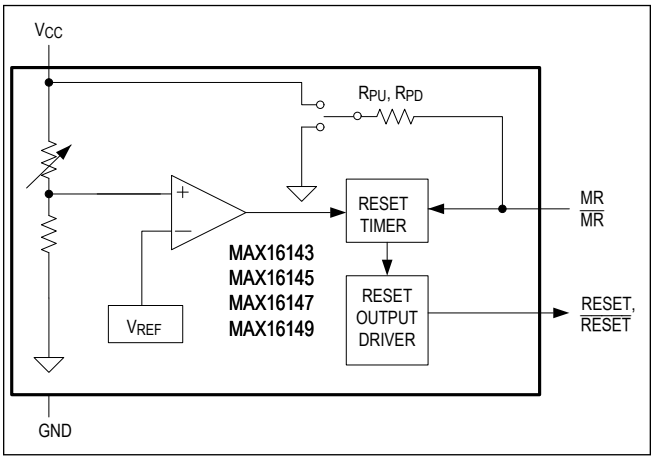

19-100361; Rev 2; 8/21

maxim integrated™

Absolute Maximum Ratings

V_{CC} to GND ..... -0.3V to +15V
MR or MR to GND ..... -0.3V to lower of VCC + 0.3 or 6.0V
RESET or RESET to GND .... -0.3V to lower of V_{CC} +0.3 or 6.0V
Input/Output Current (All pins)..... -20mA to +20mA
Continuous Power Dissipation (Multilayer Board,
SOT23, T_A = +70°C, derate 3.9mW/°C ..... above +70°C.) 312.6mW
Continuous Power Dissipation (Multilayer Board,
WLP, T_A = +70°C, derate 9.7mW/°C above +70°C.) 776mW
Operating Temperature Range .....-40°C to +125°C
Storage Temperature Range .....-65°C to +150°C

Stresses beyond those listed under "Absolute Maximum Ratings" may cause permanent damage to the device. These are stress ratings only, and functional operation of the device at these or any other conditions beyond those indicated in the operational sections of the specifications is not implied. Exposure to absolute maximum rating conditions for extended periods may affect device reliability.

Package Information

SOT-23

Package Code	U5+1
Outline Number	21-0057
Land Pattern Number	90-0174
THERMAL RESISTANCE, SINGLE-LAYER BOARD	
Junction-to-Ambient (θ_{JA})	324.3
Junction-to-Case Thermal Resistance (θ_{JC})	82
THERMAL RESISTANCE, FOUR-LAYER BOARD	
Junction-to-Ambient (θ_{JA})	255.9
Junction-to-Case Thermal Resistance (θ_{JC})	81

WLP

Package Code	W40E0+1
Outline Number	21-100215
Land Pattern Number	*See App Note 1891*
THERMAL RESISTANCE, FOUR-LAYER BOARD	
Junction-to-Ambient (θ_{JA})	103°C/W
Junction-to-Case Thermal Resistance (θ_{JC})	N/A

For the latest package outline information and land patterns (footprints), go to *www.maximintegrated.com/packages*. Note that a "+", "#", or "-" in the package code indicates RoHS status only. Package drawings may show a different suffix character, but the drawing pertains to the package regardless of RoHS status.

Package thermal resistances were obtained using the method described in JEDEC specification JESD51-7, using a four-layer board. For detailed information on package thermal considerations, refer to *www.maximintegrated.com/thermal-tutorial*.

Electrical Characteristics

(V_{CC} = 2.3V to 14V, T_J = T_A = -40°C to +125°C, Typical values are at T_A = 25°C unless otherwise noted. Limits over the operating temperature range and relevant supply voltage range are guaranteed by design, test, and characterization.)

PARAMETER	SYMBOL	CONDITIONS	MIN	TYP	MAX	UNITS
Operating Voltage Range	V_{CC}	Correct threshold detection	3.3		14	V
		MAX16143, MAX16147 (active-low). Correct reset state for supply ramp time ≥ 20µs. (Note 1)	1.3		14	
		MAX16145, MAX16149 (active-high). Correct reset state for supply ramp time ≥ 1ms. (Note 2)	2		14	
Supply Current	I_{CC}	VCC ≤ VTH + 150mV		25	55	µA
Reset Threshold Accuracy	V_{TH_ACC}		-1.5		+1.5	%
Reset Threshold Hysteresis		Hysteresis option Q, V_{CC} rising		0.5		%V_{TH}
		Hysteresis option R, V_{CC} rising		1		
		Hysteresis option S, V_{CC} rising		3		
		Hysteresis option T, V_{CC} rising		5		
VCC to Reset Output Delay	t_{RD}	V_{CC} falling at 10mV/µs from (V_{CC} + 100mV) to (V_{CC} - 100mV)		15		µs
Reset Timeout Period Accuracy (Note 3)		Variation from nominal t_{RP}	-25		+25	%
Output Voltage Low	V_{OL}	V_{CC} ≥ 1.7V, I_{SINK} = 3.2mA			0.4	V
		1.3V ≤ V_{CC} < 1.7V, I_{SINK} = 100µA			0.4	
Output Voltage High	V_{OH}	MAX16147/MAX16149, I_{SOURCE} = 10µA	2.4		3.15	V
Output Current	I_{OH}	V_{OH} = 2.5V	25	50	80	µA
Open-Drain Output Leakage Current		MAX16143/MAX16145			1	µA
Manual Reset Debounce Time	t_{DB}	Fast, Active-low or active-high manual reset		45	70	µs
		Slow, Active-low or active-high manual reset		50	70	ms
Manual Reset Minimum Input Pulse Width	t_{PW}	Edge-triggered manual reset option.		-		µs
$\overline{MR}$ Internal Pullup Resistance	R_{PU}	$\overline{MR}$ Active low		50		kΩ
MR Internal Pulldown Resistance	R_{PD}	MR Active High		50		kΩ
Input Voltage Low	V_{IL}	MR, $\overline{MR}$			0.7	V
Input Voltage High	V_{IH}	MR, $\overline{MR}$	1.7			V
MR leakage Current		MR, $\overline{MR}$. Internal pullup resistor not connected.	-150		+150	nA

Note 1: MAX16143, MAX16147 (active-low) correct reset state for supply ramp time ≥ 20µs

Note 2: MAX16145, MAX16149 (active-high). Correct reset state for supply ramp time ≥ 1ms

Note 3: During power-up, the internal regulator takes 2ms. Power-up time must be added to reset timeout period.

Pin Configurations

SOT23

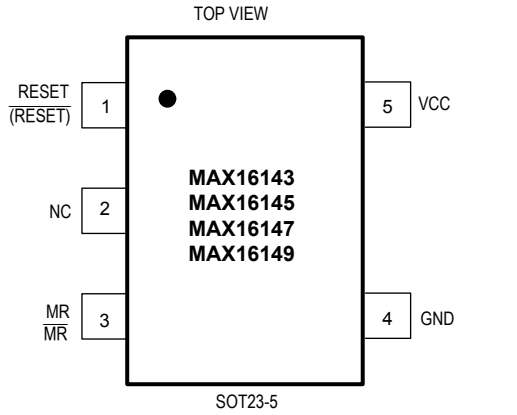

WLP

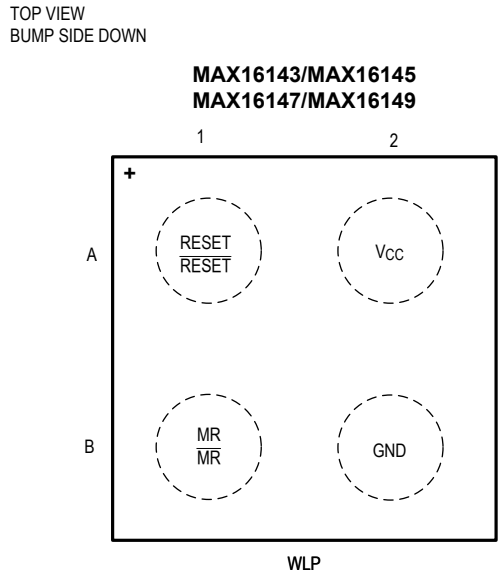

Pin Description

PIN		NAME	FUNCTION
SOT23	WLP		
1	A1	$\overline{\text{RESET}}$, RESET	Reset Output. RESET asserts when V_{CC} falls below the factory-set threshold or when the manual reset is triggered. RESET deasserts after the factory-set reset timeout when V_{CC} goes above its set threshold or when MR is released.
2, 4	B2	GND	Ground

Pin Description (continued)

PIN		NAME	FUNCTION
SOT23	WLP		
3	B1	MR, $\overline{MR}$	Manual Reset Input. See *Manual Reset Input* section for more detail.
5	A2	V_{CC}	Supply Voltage Input. Bypass V_{CC} to ground with a 0.1µF capacitor.

Detailed Description

The MAX16143/MAX16145/MAX16147/MAX16149 are supervisory circuits that monitor their V_{CC} voltage from +3.3V to +11.6V using factory-set reset threshold and offer manual reset capability. The MAX16143/MAX16145 feature an open-drain reset output, while the MAX16147/ MAX16149 feature a push-pull reset output. The reset output asserts and remains asserted for the reset timeout after the V_{CC} voltage exceeds its threshold. All devices are offered with reset timeout periods ranging from 30µs to 4200ms. See Table 1 for available options. The reset output is guaranteed to be in valid logic state down to V_{CC} = 1.3V.

V_{CC} Threshold

The MAX16143/MAX16145/MAX16147/MAX16149 operate with a VCC supply voltage from +3.3V to +14V, with monitoring range of +3.3V to +11.6V. V_{CC} has a rising threshold of V_{TH} + V_{HYST} and a falling threshold of V_{TH}. When V_{CC} rises above V_{TH} + V_{HYST} and the manual reset input is in an inactive state, RESET deasserts after the reset timeout period (t_{RP}). See the timing diagram in Figure 1. When V_{CC} falls below V_{TH}, the reset output asserts low after a fixed delay (t_{RD}).

Table 1. Reset Timeout Options

SUFFIX	RESET TIMEOUT PERIOD			UNIT
	T_A = +25°C	T_A = -40°C to +125°C		
	TYP	MIN	MAX	
A	30	—	—	µs
B	1.50	1.125	1.875	ms
C	3	2.25	3.75	ms
D	6	4.5	7.5	ms
E	12	9	15	ms
F	24	18	30	ms
G	50	37.5	62.5	ms
H	100	75	125	ms
I	150	112.5	187.5	ms
J	225	168.8	281.3	ms
K	300	225	375	ms
L	450	337.5	562.5	ms
M	600	450	750	ms
N	1000	740	1250	ms
O	2000	1500	2500	ms
P	4200	3150	5250	ms

Table 2. V_{CC} Threshold Options

SUFFIX	VCC THRESHOLD			UNIT
	MIN	TYP	MAX	
Y6	11.484	11.600	11.716	V
Y5	11.385	11.500	11.615	V
Y4	11.286	11.400	11.514	V
Y3	11.187	11.300	11.413	V
Y2	11.088	11.200	11.312	V
Y1	10.989	11.100	11.211	V
Y0	10.89	11.000	11.11	V

Table 2. V_{CC} Threshold Options (continued)

X7	10.593	10.700	10.807	V
X6	10.494	10.600	107.06	V
X5	10.395	10.500	10.605	V
00	9.9	10.000	10.1	V
95	9.405	9.500	9.595	V
90	8.91	9.000	9.09	V
85	8.415	8.500	8.585	V
80	7.92	8.000	8.08	V
75	7.425	7.500	7.575	V
70	6.93	7.000	7.07	V
65	6.435	6.500	6.565	V
60	5.94	6.000	6.06	V
55	5.445	5.500	5.555	V
48	4.752	4.800	4.848	V
47	4.653	4.700	4.747	V
46	4.554	4.600	4.646	V
45	4.455	4.500	4.545	V
44	4.356	4.400	4.444	V
43	4.257	4.300	4.343	V
42	4.158	4.200	4.242	V
41	4.059	4.100	4.141	V
40	3.960	4.000	4.040	V
39	3.861	3.900	3.939	V
38	3.762	3.800	3.838	V
37	3.663	3.700	3.737	V
36	3.564	3.600	3.636	V
35	3.465	3.500	3.535	V
34	3.366	3.400	3.434	V
33	3.267	3.3	3.333	V

Table 3. V_{CC} Threshold Hysteresis Options

SUFFIX	HYSTERSIS
Q	0.5%
R	1%
S	3%
T	5%

Reset Output

The MAX16143/MAX16145 feature open-drain reset outputs, while the MAX16147/MAX16149 feature push-pull reset outputs. For proper operation, connect the reset output of the MAX16143 and the MAX16145 to V_{CC}, or external voltage with a pullup resistor. The reset output of the MAX16147 and the MAX16149 are internally connected to a 2.5V or 3V regulator.

Manual Reset Input

The MAX16143/MAX16145/MAX16147/MAX16149 include a manual reset input (MR, $\overline{MR}$) that allows initiating system reset using external signal or push-button switch. The manual reset input is available in active-low, active-high or edge-triggered option. The active-low ($\overline{MR}$) and active-high (MR) inputs feature either 45µs or 50ms debounce timing option to help filter out noise during manual reset transitioning from inactive to active state. In addition, the manual reset input is factory-programmable to have a pull up/pull down resistor or be left floating. See Table 4 and Table 5 for available options.

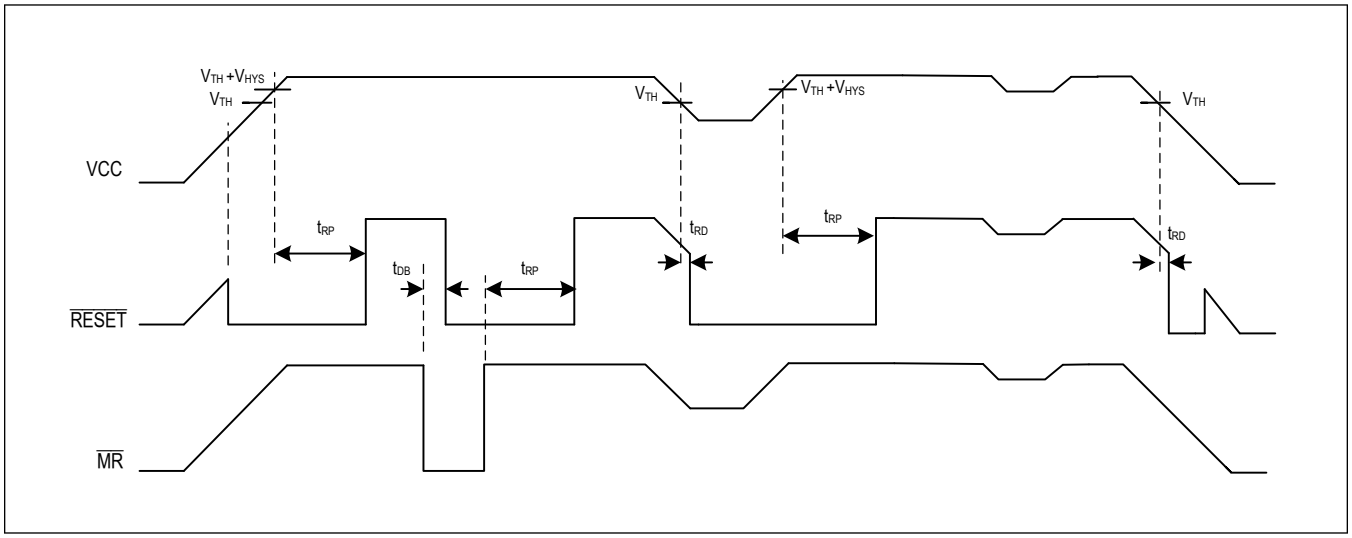

Figure 1. RESET and MR Timing Diagram

Table 4. MAX16143/MAX16145 Manual Reset Configuration Options

SUFFIX	LEVEL HIGH/LOW	DEBOUNCE TIME (NA = EDGE TRIGGER)	MR/$\overline{MR}$ PULLUP/PULLDOWN
A	H	45µs	NOT CONNECTED
B	H	45µs	PULLDOWN
C	H	50ms	NOT CONNECTED
D	H	50ms	PULLDOWN
E	L	45µs	NOT CONNECTED
F	L	45µs	PULLUP
G	L	50ms	NOT CONNECTED
H	L	50ms	PULLUP
J	H	N/A	NOT CONNECT
K	H	N/A	PULLDOWN
L	L	N/A	NOT CONNECTED
M	L	N/A	PULL UP

Table 5. MAX16147/MAX16149 Manual Reset and RESET Configuration Options

SUFFIX	LEVEL HIGH/ LOW	DEBOUNCE TIME (NA = EDGE TRIGGER)	MR/$\overline{MR}$ PULLUP/ PULLDOWN	RESET PULLUP VOLTAGE
A	H	45µs	NOT CONNECTED	3V
B	H	45µs	PULLDOWN	3V
C	H	50ms	NOT CONNECTED	3V

Table 5. MAX16147/MAX16149 Manual Reset and RESET Configuration Options (continued)

SUFFIX	LEVEL HIGH/ LOW	DEBOUNCE TIME (NA = EDGE TRIGGER)	MR/$\overline{MR}$ PULLUP/ PULLDOWN	RESET PULLUP VOLTAGE
D	H	50ms	PULLDOWN	3V
E	L	45µs	NOT CONNECTED	3V
F	L	45µs	PULLUP	3V
G	L	50ms	NOT CONNECTED	3V
H	L	50ms	PULLUP	3V
J	H	N/A	NOT CONNECTED	2.5V
K	H	N/A	PULLDOWN	2.5V
L	H	N/A	NOT CONNECTED	2.5V
M	H	N/A	PULLUP	2.5V
N	L	45µs	NOT CONNECTED	2.5V
O	L	45µs	PULLUP	2.5V
P	L	50ms	NOT CONNECTED	2.5V
Q	L	50ms	PULLUP	2.5V
R	H	N/A	NOT CONNECTED	3V
S	H	N/A	PULLDOWN	3V
T	L	N/A	NOT CONNECTED	3V
U	L	N/A	PULLUP	3V
V	H	N/A	NOT CONNECTED	2.5V
W	H	N/A	PULLDOWN	2.5V
X	L	N/A	NOT CONNECTED	2.5V
Y	L	N/A	PULLUP	2.5V

Applications Information

Reset Output

The MAX16143/MAX16145/MAX16147/MAX16149 are microprocessor supervisory circuits that assert a reset to prevent code-execution errors during power-up, power- down, and brownout conditions. The reset output asserts when the V_{CC} voltage falls below the factory-set threshold, V_{TH}. The reset output de-asserts after the reset timeout (t_{RP}) when V_{CC} voltage rises above the reset threshold plus the hysteresis voltage, (V_{TH} + V_{HYST}). The reset output is guaranteed to be at the correct logic voltage for VCC voltage down to 1.3V. See Figure 1 for details.

Manual Reset Input (MR)

Many systems require manual reset capability, allowing the operator, a test technician, or external logic circuitry to initiate a reset. The MAX16143/MAX16145/MAX16147/ MAX16149 provide this capability by featuring an manual reset input (MR). When a manual reset is initiated, the reset output asserts and remain asserted as long as the manual reset input is in active state. Reset deasserts after reset timeout when the manual reset input is released. Figure 1 shows the behavior of the manual reset configured as active-low, with 50kΩ pull ($\overline{MR}$). See *Selector Guide* for available options.

Depending on the application, the manual reset input is factory-programmable to have either an internal pullup resistor, pulldown resistor of 50kΩ (typ), or be left floating.

The pullup resistor allows the manual reset input to be left unconnected if not used. An external pullup resistor is required if the manual reset input option chosen does not have an internal pullup resistor. The maximum input voltage on $\overline{MR}$ is 5.5V.

An alternative is to use a normally open momentary switch connected from MR (active-low) to GND, or from $\overline{MR}$ (active-high) to a logic-high voltage to create a manual-reset function. If a Long Debounce version is used, external debounce circuitry is not required, but an external pullup or pulldown will be required if a version without an internal resistor is used. If the manual reset input is driven from long cables, or the IC is used in a noisy environment, connect a 0.1µF capacitor from $\overline{MR}$/MR to GND in order to provide additional noise immunity.

Negative-Going V_{CC} Transients Protection

These supervisory circuits are relatively immune to short-duration, negative-going V_{CC} transients (glitches). The Maximum Transient Duration vs. Reset Threshold Overdrive graph (in the Typical Operating Characteristics section) shows the typical transient pulse width and amplitude required to trigger a reset. The reset threshold overdrive specifies how far the pulse falls below the actual reset threshold, and the maximum transient duration specifies the width of the pulse as it crosses the reset threshold. If a pulse occurs in the region above the curve, a reset triggers. If a pulse occurs in the region below the curve, a reset does not trigger.

Selector Guide

MAX161 _ _ _ _ _ _

BASE PART NUMBER	
SUFFIX	RESET OUTPUT
43	OPEN-DRAIN, ACTIVE-LOW
45	OPEN-DRAIN, ACTIVE- HIGH
47	PUSH-PULL, ACTIVE- LOW
49	PUSH-PULL, ACTIVE- HIGH

SUFFIX	PACKAGE
W	4-WLP
S	5-SOT23

SUFFIX	RESET TIMEOUT PERIOD			UNITS
	T_A = 25°C	T_A = -40°C to +125°C		
	TYP	MIN	MAX	
A	30	TBD	TBD	ms
B	1.5	1.125	1.875	ms
C	3	2.25	3.75	ms
D	6	4.5	7.5	ms
E	12	9	15	ms
F	24	18	30	ms
G	50	37.5	62.5	ms
H	100	75	125	ms
I	150	112.5	187.5	ms
J	225	168.8	281.3	ms
K	300	225	375	ms
L	450	337.5	562.5	ms
M	600	450	750	ms
N	1000	740	1250	ms
O	2000	1500	2500	ms
P	4200	3150	5250	ms

SUFFIX	1.5%			UNITS
	MIN	TYP	MAX	
Y6	11.484	11.600	11.716	V
Y5	11.385	11.500	11.615	V
Y4	11.286	11.400	11.514	V
Y3	11.187	11.300	11.413	V
Y2	11.088	11.200	11.312	V
Y1	10.989	11.100	11.211	V
Y0	10.89	11.000	11.11	V
X7	10.593	10.700	10.807	V
X6	10.494	10.600	107.06	V
X5	10.395	10.500	10.605	V
00	9.9	10.000	10.1	V
95	9.405	9.500	9.595	V
90	8.91	9.000	9.09	V
85	8.415	8.500	8.585	V
80	7.92	8.000	8.08	V
75	7.425	7.500	7.575	V
70	6.93	7.000	7.07	V
65	6.435	6.500	6.565	V
60	5.94	6.000	6.06	V
55	5.445	5.500	5.555	V
48	4.752	4.800	4.848	V
47	4.653	4.700	4.747	V
46	4.554	4.600	4.646	V
45	4.455	4.500	4.545	V
44	4.356	4.400	4.444	V
43	4.257	4.300	4.343	V
42	4.158	4.200	4.242	V
41	4.059	4.100	4.141	V
40	3.960	4.000	4.040	V
39	3.861	3.900	3.939	V
38	3.762	3.800	3.838	V
37	3.663	3.700	3.737	V
36	3.564	3.600	3.636	V
35	3.465	3.500	3.535	V
34	3.366	3.400	3.434	V
33	3.267	3.300	3.333	V

SUFFIX	HYSTERSIS
Q	0.5%
R	1%
S	3%
T	5%

MAX16143/MAX16145

SUFFIX	LEVEL HIGH/LOW	DEBOUNCE TIME (NA = EDGE TRIGGER)	PULL-UP/PULL DOWN
A	H	45µs	NOT CONNECTED
B	H	45µs	PULL DOWN
C	H	50ms	NOT CONNECTED
D	H	50ms	PULL DOWN
E	L	45µs	NOT CONNECTED
F	L	45µs	PULL UP
G	L	50ms	NOT CONNECTED
H	L	50ms	PULL UP
J	H	N/A	NOT CONNECTED
K	H	N/A	PULL DOWN
L	L	N/A	NOT CONNECTED
M	L	N/A	PULL UP

MAX16147/MAX16149

SUFFIX	LEVEL HIGH/LOW	DEBOUNCE TIME (NA = EDGE TRIGGER)	PULL-UP/PULL DOWN	RESET PULL-UP VOLTAGE
A	H	45µs	NOT CONNECTED	3V
B	H	45µs	PULL DOWN	3V
C	H	50ms	NOT CONNECTED	3V
D	H	50ms	PULL DOWN	3V
E	L	45µs	NOT CONNECTED	3V
F	L	45µs	PULL UP	3V
G	L	50ms	NOT CONNECTED	3V
H	L	50ms	PULL UP	3V
J	H	N/A	NOT CONNECTED	2.5V
K	H	N/A	PULL DOWN	2.5V
L	H	N/A	NOT CONNECTED	2.5V
M	H	N/A	PULL UP	2.5V
N	L	45µs	NOT CONNECTED	2.5V
O	L	45µs	PULL UP	2.5V
P	L	50ms	NOT CONNECTED	2.5V
Q	L	50ms	PULL UP	2.5V
R	H	N/A	NOT CONNECTED	3V
S	H	N/A	PULL DOWN	3V
T	L	N/A	NOT CONNECTED	3V
U	L	N/A	PULL UP	3V
V	H	N/A	NOT CONNECTED	2.5V
W	H	N/A	PULL DOWN	2.5V
X	L	N/A	NOT CONNECTED	2.5V
Y	L	N/A	PULL UP	2.5V

Typical Application Circuit

Application Circuit for MAX16147/MAX16149

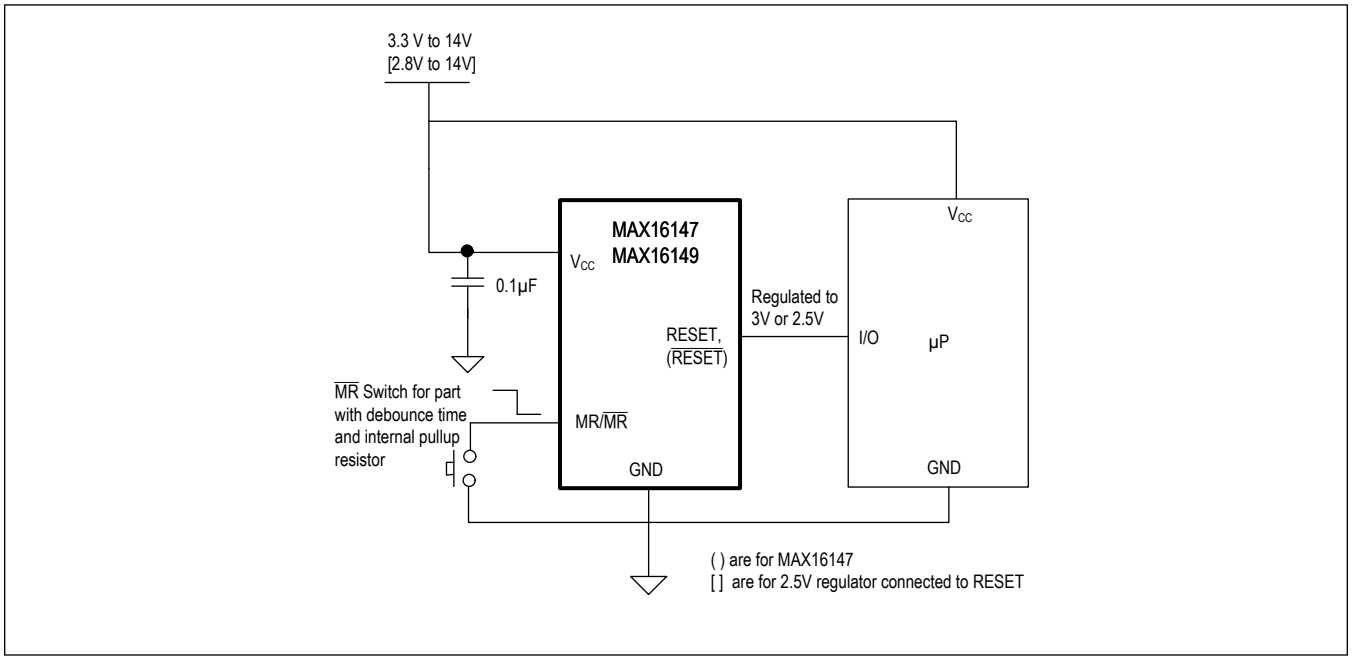

Application Circuit for MAX16143/MAX16145

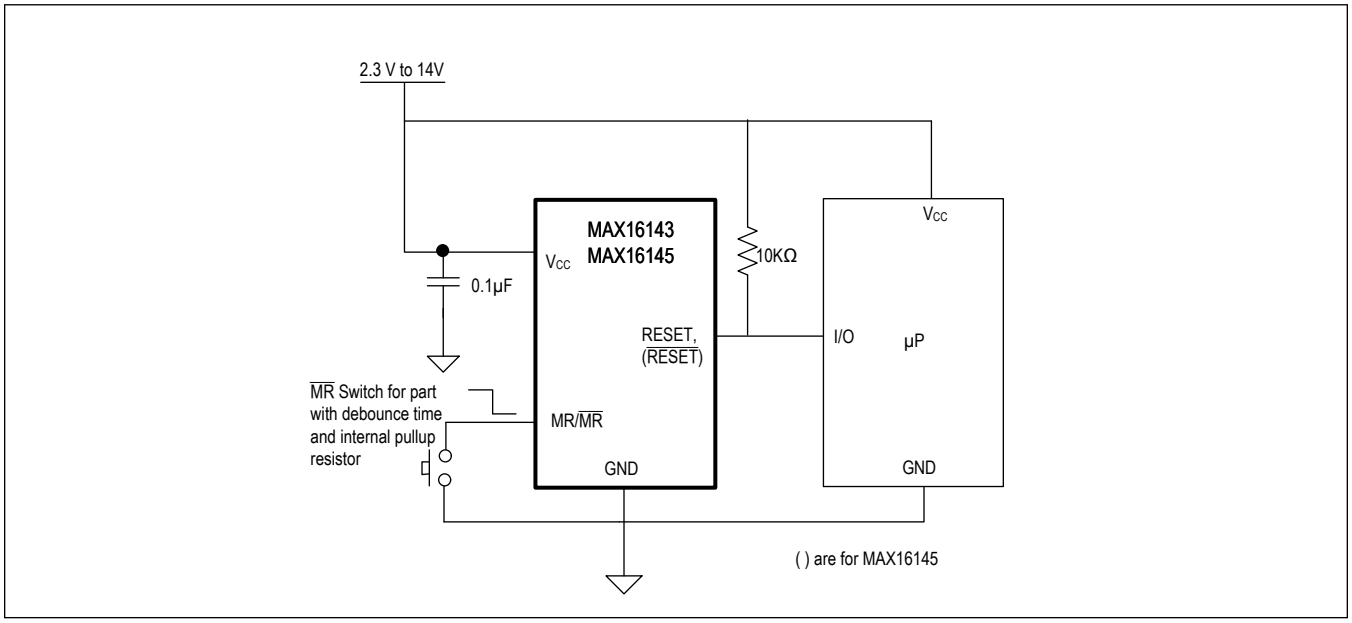

Ordering Information

PART	TEMP RANGE	PIN-PACKAGE
MAX16143_____ +T*	-40°C to +125°C	4 WLP
MAX16145_____ T*	-40°C to +125°C	4 WLP
MAX16147WM75SA+T	-40°C to +125°C	4 WLP
MAX16149_____ T*	-40°C to +125°C	4 WLP

**Future product—Contact factory for availability.*

+ Denotes a lead(Pb)-free/RoHS-compliant package.

T Denotes tape-and-reel.

Revision History

REVISION NUMBER	REVISION DATE	DESCRIPTION	PAGES CHANGED
0	6/18	Initial release	—
1	6/18	Updated Simplified Block Diagram and Ordering Information table	1, 13
2	8/21	Updated Benefit and Features, Electrical Characteristics, Typical Operating Characteristics, Pin Configuration, Detailed Description, Selector Guide, Typical Application Circuit	1, 3, 5-8, 11-14

For pricing, delivery, and ordering information, please visit Maxim Integrated's online storefront at https://www.maximintegrated.com/en/storefront/storefront.html.

Maxim Integrated cannot assume responsibility for use of any circuitry other than circuitry entirely embodied in a Maxim Integrated product. No circuit patent licenses are implied. Maxim Integrated reserves the right to change the circuitry and specifications without notice at any time. The parametric values (min and max limits) shown in the Electrical Characteristics table are guaranteed. Other parametric values quoted in this data sheet are provided for guidance.

Maxim Integrated and the Maxim Integrated logo are trademarks of Maxim Integrated Products, Inc. © 2021 Maxim Integrated Products, Inc.