19-1185; Rev 3; 9/08

EVALUATION KIT AVAILABLE

3.6V, 1W RF Power Transistors for 900MHz Applications

General Description

The MAX2601/MAX2602 are RF power transistors optimized for use in portable cellular and wireless equipment that operates from three NiCd/NiMH cells or one Li-Ion cell. These transistors deliver 1W of RF power from a 3.6V supply with efficiency of 58% when biased for constant-envelope applications (e.g., FM or FSK). For NADC (IS-54) operation, they deliver 29dBm with -28dBc ACPR from a 4.8V supply.

The MAX2601 is a high-performance silicon bipolar RF power transistor. The MAX2602 includes a high-performance silicon bipolar RF power transistor, and a biasing diode that matches the thermal and process characteristics of the power transistor. This diode is used to create a bias network that accurately controls the power transistor's collector current as the temperature changes.

The MAX2601/MAX2602 can be used as the final stage in a discrete or module power amplifier. Silicon bipolar technology eliminates the need for voltage inverters and sequencing circuitry, as required by GaAsFET power amplifiers. Furthermore, a drain switch is not required to turn off the MAX2601/MAX2602. This increases operating time in two ways: it allows lower system end-of-life battery voltage, and it eliminates the wasted power from a drain-switch device.

The MAX2601/MAX2602 are available in thermally enhanced, 8-pin SO packages, which are screened to the extended temperature range (-40°C to +85°C).

Applications

Narrow-Band PCS (NPCS)

915MHz ISM Transmitters

Microcellular GSM (Power Class 5)

AMPS Cellular Phones

Digital Cellular Phones

Two-Way Paging

CDPD Modems

Land Mobile Radios

Features

- **Low Voltage: Operates from 1 Li-Ion or 3 NiCd/NiMH Batteries**
- **DC-to-Microwave Operating Range**
- **1W Output Power at 900MHz**
- **On-Chip Diode for Accurate Biasing (MAX2602)**
- **Low-Cost Silicon Bipolar Technology**
- **Does Not Require Negative Bias or Supply Switch**
- **High Efficiency: 58%**

Ordering Information

PART	TEMP RANGE	PIN-PACKAGE
MAX2601ESA	-40°C to +85°C	8 SOIC
MAX2602ESA	-40°C to +85°C	8 SOIC

Pin Configurations

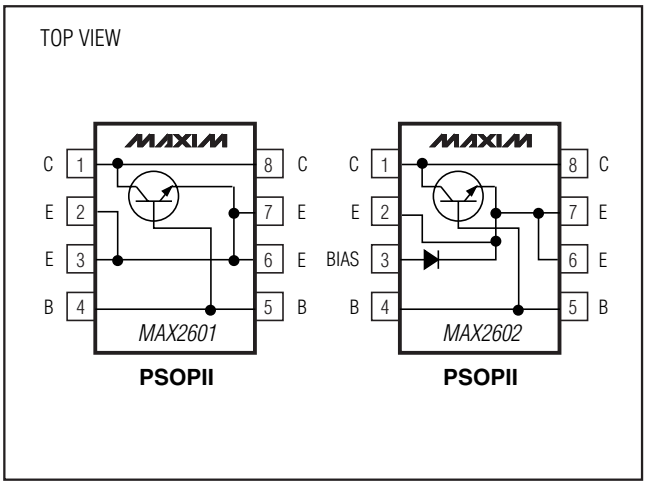

Typical Application Circuit appears at end of data sheet.

For pricing, delivery, and ordering information, please contact Maxim Direct at 1-888-629-4642, or visit Maxim's website at www.maxim-ic.com.

3.6V, 1W RF Power Transistors for 900MHz Applications

ABSOLUTE MAXIMUM RATINGS

Collector-Emitter Voltage, Shorted Base (V_{CES}) 17V
Emitter Base Reverse Voltage (V_{EBO}).....2.3V
BIAS Diode Reverse Breakdown Voltage (MAX2602) 2.3V
Average Collector Current (I_C).....1200mA
Continuous Power Dissipation (T_A = +70°C)
SOIC (derate 80mW/°C above +70°C) (Note 1) 6.4W

Operating Temperature Range .....-40°C to +85°C
Storage Temperature Range .....-65°C to +165°C
Junction Temperature.....+150°C
Lead Temperature (soldering, 10s) .....+300°C

Note 1: Backside slug must be properly soldered to ground plane (see *Slug Layout Techniques* section).

Stresses beyond those listed under "Absolute Maximum Ratings" may cause permanent damage to the device. These are stress ratings only, and functional operation of the device at these or any other conditions beyond those indicated in the operational sections of the specifications is not implied. Exposure to absolute maximum rating conditions for extended periods may affect device reliability.

DC ELECTRICAL CHARACTERISTICS

(T_A = T_{MIN} to T_{MAX}, unless otherwise noted.)

PARAMETER	SYMBOL	CONDITIONS		MIN	TYP	MAX	UNITS
Collector-Emitter Breakdown Voltage	BV_{CEO}	I_C < 100µA	Open base	15			V
	BV_{CES}		Shorted base	15			
Collector-Emitter Sustaining Voltage	LV_{CEO}	I_C = 200mA		5.0			V
Collector-Base Breakdown Voltage	BV_{CBO}	I_C < 100µA, emitter open		15			V
DC Current Gain	h_{FE}	I_C = 250mA, V_{CE} = 3V		100			
Collector Cutoff Current	I_{CES}	V_{CE} = 6V, V_{BE} = 0V			0.05	1.5	µA
Output Capacitance	C_{OB}	V_{CB} = 3V, I_E = 0mA, f = 1MHz			9.6		pF

AC ELECTRICAL CHARACTERISTICS

(Test Circuit of Figure 1, V_{CC} = 3.6V, V_{BB} = 0.750V, Z_{LOAD} = Z_{SOURCE} = 50Ω, P_{OUT} = 30dBm, f = 836MHz, T_A = +25°C, unless otherwise noted.)

PARAMETER	SYMBOL	CONDITIONS	MIN	TYP	MAX	UNITS
Frequency Range	f	(Note 2)	DC		1	GHz
Base Current	I_B			4.2		mA
Harmonics	2fo, 3fo	V_{CC} = 3.6V, P_{OUT} = 30dBm		-43		dBc
		V_{CC} = 3.0V, P_{OUT} = 29dBm		-42		
Power Gain		P_{OUT} = 30dBm		11.6		dB
Collector Efficiency	η	No modulation		58		%
Stability under Continuous Load Mismatch Conditions	V_{SWR}	V_{CC} = 5.5V, all angles (Note 3)		8:1		
Two-Tone IMR	IM3	P_{OUT} = +30dBm total power, f1 = 835MHz, f2 = 836MHz		-16		dBc
	IM5			-25		
Noise Figure	NF	V_{BB} = 0.9V		3.3		dB

Note 2: Guaranteed by design.
Note 3: Under these conditions: a) no spurious oscillations shall be observed at collector greater than -60dBc; b) no parametric degradation is observable when mismatch is removed; and c) no current draw in excess of the package dissipation capability is observed.

3.6V, 1W RF Power Transistors for 900MHz Applications

Typical Operating Characteristics

(Test Circuit of Figure 1, input/output matching networks optimized for specific measurement frequency, V_{CC} = 3.6V, V_{BB} = 0.750V, P_{OUT} = 30dBm, Z_{LOAD} = Z_{SOURCE} = 50Ω, f = 836MHz, T_A = +25°C, unless otherwise noted.)

COLLECTOR CURRENT

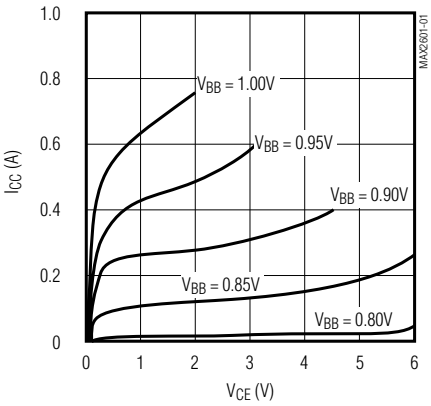

TWO-TONE OUTPUT POWER AND IM3 vs. COLLECTOR CURRENT

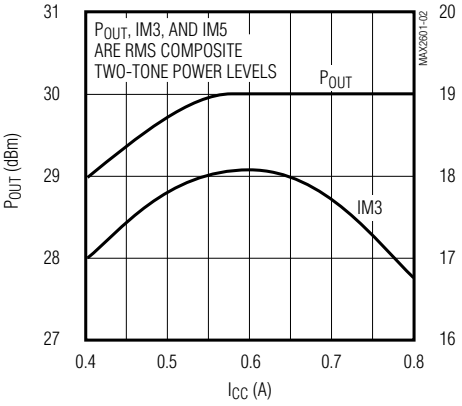

TWO-TONE OUTPUT POWER, IM3, IM5 vs. INPUT POWER

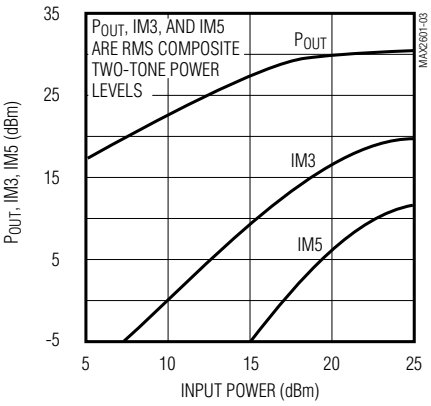

TWO-TONE OUTPUT POWER, IM3, IM5 vs. INPUT POWER (f = 433MHz)

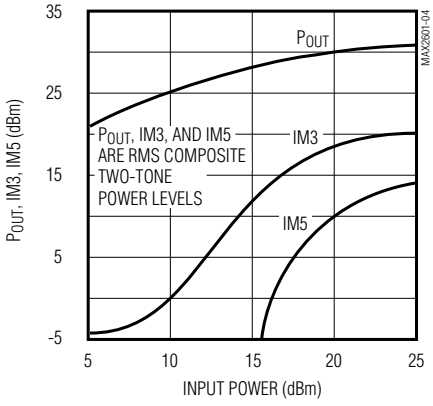

ACPR vs. OUTPUT POWER (IS-54 π/4 DQPSK MODULATION, V_{BB} = 0.85V)

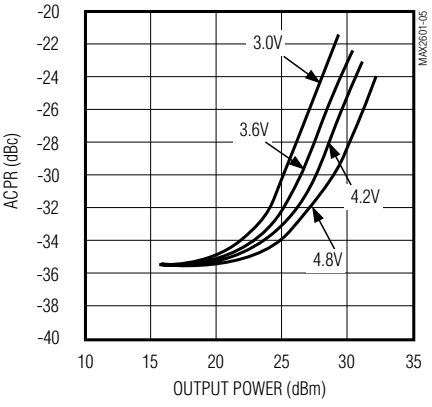

COLLECTOR EFFICIENCY vs. OUTPUT POWER (IS-54 π/4 DQPSK MODULATION, V_{BB} = 0.85V)

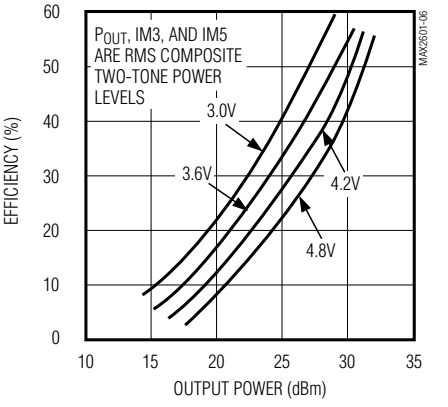

Pin Description

PIN		NAME	FUNCTION
MAX2601	MAX2602		
1, 8	1, 8	C	Transistor Collector
2, 3, 6, 7, Slug	2, 6, 7, Slug	E	Transistor Emitter
—	3	BIAS	Anode of the Biasing Diode that matches the thermal and process characteristics of the power transistor. Requires a high-RF-impedance, low-DC-impedance (e.g., inductor) connection to the transistor base (Pin 4). Current through the biasing diode (into Pin 3) is proportional to 1/15 the collector current in the transistor.
4, 5	4, 5	B	Transistor Base

3.6V, 1W RF Power Transistors for 900MHz Applications

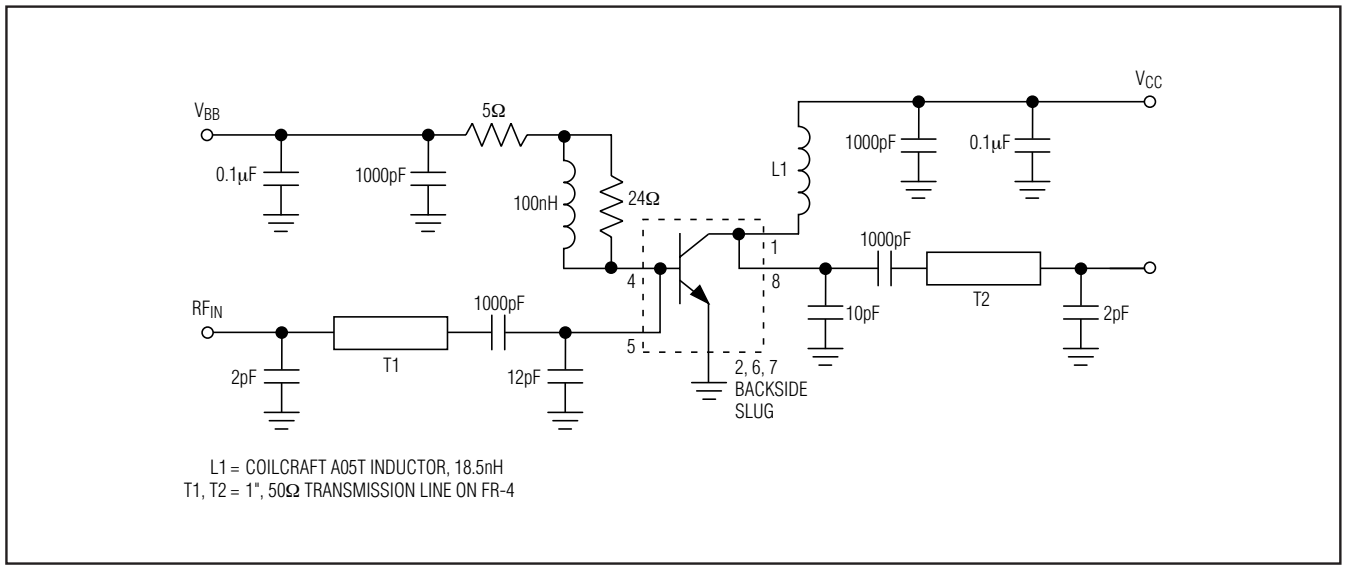

Figure 1. Test Circuit

Detailed Description

MAX2601/MAX2602

The MAX2601/MAX2602 are high-performance silicon bipolar transistors in power-enhanced, 8-pin SO packages. The base and collector connections use two pins each to reduce series inductance. The emitter connects to three (MAX2602) or four (MAX2601) pins in addition to a back-side heat slug, which solders directly to the PC board ground to reduce emitter inductance and improve thermal dissipation. The transistors are intended to be used in the common-emitter configuration for maximum power gain and power-added efficiency.

Current Mirror Bias (MAX2602 only)

The MAX2602 includes a high-performance silicon bipolar RF power transistor and a thermally matched biasing diode that matches the power transistor's thermal and process characteristics. This diode is used to create a bias network that accurately controls the power transistor's collector current as the temperature changes (Figure 2).

The biasing diode is a scaled version of the power transistor's base-emitter junction, in such a way that the current through the biasing diode is 1/15 the quiescent collector current of the RF power transistor. Supplying the biasing diode with a constant current source and connecting the diode's anode to the RF power transistor's base ensures that the RF power transistor's quiescent collector current remains constant through temperature variations. Simply tying the biasing diode to the supply through a resistor is adequate in most situations. If large supply variations are anticipated, connect the biasing diode to a reference voltage through a resistor, or use a stable current source. Connect the biasing diode to the base of the RF power transistor through a large RF impedance, such as an RF choke (inductor), and decouple to ground through a surface-mount chip capacitor larger than 1000pF.

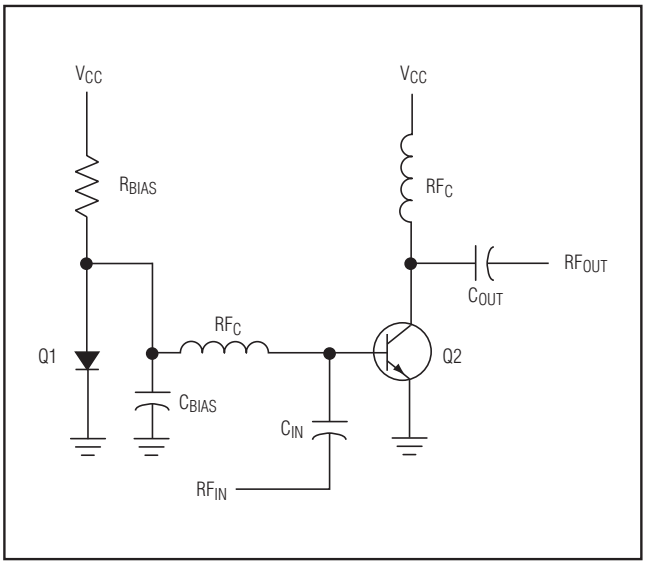

Figure 2. Bias Diode Application

Applications Information

Optimum Port Impedance

The source and load impedances presented to the MAX2601/MAX2602 have a direct impact upon its gain, output power, and linearity. Proper source- and load-terminating impedances (Z_S and Z_L) presented to the power transistor base and collector will ensure optimum performance.

For a power transistor, simply applying the conjugate of the transistor's input and output impedances calculated from small-signal S-parameters will yield less than optimum device performance.

For maximum efficiency at V_{BB} = 0.75V and V_{CC} = 3.6V, the optimum power-transistor source and load impedances (as defined in Figure 3) are:

At 836MHz: $Z_S = 5.5 + j2.0$
$Z_L = 6.5 + j1.5$

At 433MHz: $Z_S = 9.5 - j2.5$
$Z_L = 8.5 - j1.5$

Z_S and Z_L reflect the impedances that should be presented to the transistor's base and collector. The package parasitics are dominated by inductance (as shown in Figure 3), and need to be accounted for when calculating Z_S and Z_L.

The internal bond and package inductances shown in Figure 3 should be included as part of the end-application matching network, depending upon exact layout topology.

Slug Layout Techniques

The most important connection to make to the MAX2601/MAX2602 is the back side. It should connect directly to the PC board ground plane if it is on the top side, or through numerous plated through-holes if the ground plane is buried. For maximum gain, this connection should have very little self-inductance. Since it is also the thermal path for heat dissipation, it must have low thermal impedance, and the ground plane should be large.

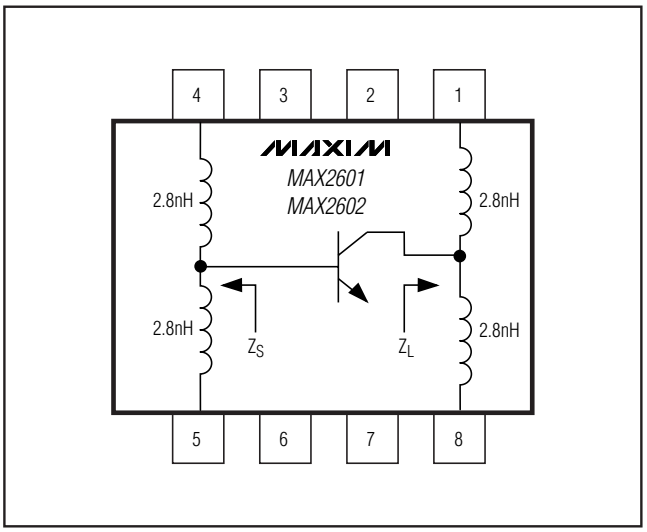

Figure 3. Optimum Port Impedance

Package Information

For the latest package outline information and land patterns, go to **www.maxim-ic.com/packages**.

PACKAGE TYPE	PACKAGE CODE	DOCUMENT NO.
8 SOIC	S8E-12	21-0041

3.6V, 1W RF Power Transistors for 900MHz Applications

Revision History

REVISION NUMBER	REVISION DATE	DESCRIPTION	PAGES CHANGED
2	5/97	—	—
3	9/08	Removed die version from *Ordering Information*	1

Maxim cannot assume responsibility for use of any circuitry other than circuitry entirely embodied in a Maxim product. No circuit patent licenses are implied. Maxim reserves the right to change the circuitry and specifications without notice at any time.

© 2008 Maxim Integrated Products Maxim is a registered trademark of Maxim Integrated Products, Inc.