19-0453; Rev 0; 1/96

MAXIM

Complete, Isolated, 3.3V RS-485/RS-422 Data Interface

General Description

The MAX3480A/MAX3480B are electrically isolated RS-485/RS-422 data-communications interfaces. Transceivers, optocouplers, and a transformer are all included in one low-cost, 28-pin DIP package. A single +3.3V supply on the logic side powers both sides of the interface.

The MAX3480B features reduced-slew-rate drivers that minimize EMI and reduce reflections caused by improperly terminated cables, allowing error-free data transmission at data rates up to 250kbps. The MAX3480A's driver slew rate is not limited, allowing transmission rates up to 2.5Mbps.

These devices typically draw 180mA of quiescent supply current. The MAX3480B provides a low-power shutdown mode in which it consumes only 0.2µA.

Drivers are short-circuit current limited and are protected against excessive power dissipation by thermal shutdown circuitry that places the driver outputs into a high-impedance state. The receiver input has a fail-safe feature that guarantees a logic-high output if the input is open circuit.

The MAX3480A/MAX3480B typically withstand 1600V_{RMS} (1 minute) or 2000V_{RMS} (1 second). Their isolated inputs and outputs meet RS-485/RS-422 specifications.

Applications

Isolated RS-485/RS-422 Data Interface

Transceivers for EMI-Sensitive Applications

Industrial-Control Local Area Networks

Automatic Test Equipment

HVAC/Building Control Networks

Ordering Information

PART	TEMP. RANGE	PIN-PACKAGE	DATA RATE (kbps)
MAX3480ACPI	0°C to +70°C	28 Plastic DIP	2500
MAX3480AEPI	-40°C to +85°C	28 Plastic DIP	2500
MAX3480BCPI	0°C to +70°C	28 Plastic DIP	250
MAX3480BEPI	-40°C to +85°C	28 Plastic DIP	250

Features

- ♦ **Isolated Data Interface to 1600V_{RMS} (1 minute)**
- ♦ **Slew-Rate-Limited Data Transmission (MAX3480B)**
- ♦ **High-Speed, Isolated, 2.5Mbps RS-485 Interface (MAX3480A)**
- ♦ **-7V to +12V Common-Mode Input Voltage Range with Respect to Isolated Ground**
- ♦ **Single +3.3V Supply**
- ♦ **Current Limiting and Thermal Shutdown for Driver Overload Protection**
- ♦ **Standard 28-Pin DIP Package**

Pin Configuration

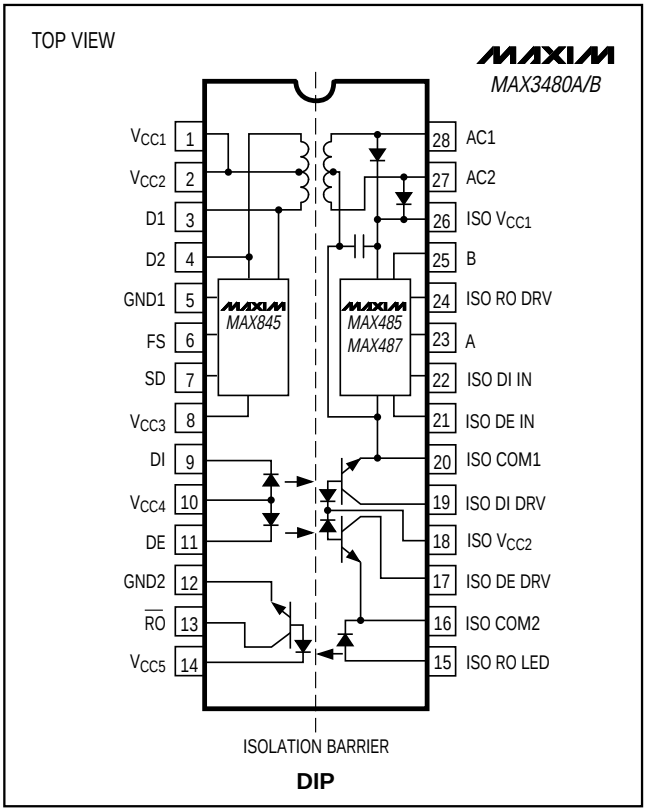

DIP

For free samples & the latest literature: http://www.maxim-ic.com, or phone 1-800-998-8800

Complete, Isolated, 3.3V RS-485/RS-422 Data Interface

ABSOLUTE MAXIMUM RATINGS

With Respect to GND:
- Supply Voltage (V_{CC1}, V_{CC2}, V_{CC4}, V_{CC5}) .....-0.3V to +3.8V
- Supply Voltage (V_{CC3}) .....-0.3V to +7V
- Control Input Voltage (SD, $\overline{FS}$) .....-0.3V to (V_{CC} + 0.3V)
- Receiver Output Voltage ($\overline{RO}$).....-0.3V to (V_{CC} + 0.3V)

With Respect to ISO COM:
- Control Input Voltage (ISO DE _) .....-0.3V to (ISO V_{CC} + 0.3V)
- Driver Input Voltage (ISO DI _).....-0.3V to (ISO V_{CC} + 0.3V)
- Receiver Output Voltage (ISO RO _) .....-0.3V to (ISO V_{CC} + 0.3V)
- Driver Output Voltage (A, B).....-8V to +12.5V
- Receiver Input Voltage (A, B).....-8V to +12.5V

LED Forward Current (DI, DE, ISO RO LED) 50mA
Continuous Power Dissipation (T_A = +70°C)
- Plastic DIP (derate 9.09mW/°C above +70°C) 727mW

Operating Temperature Ranges
- MAX3480_CPI .....0°C to +70°C
- MAX3480_EPI .....-40°C to +85°C

Storage Temperature Range .....-65°C to +160°C
Lead Temperature (soldering, 10sec) .....+300°C

Stresses beyond those listed under "Absolute Maximum Ratings" may cause permanent damage to the device. These are stress ratings only, and functional operation of the device at these or any other conditions beyond those indicated in the operational sections of the specifications is not implied. Exposure to absolute maximum rating conditions for extended periods may affect device reliability.

ELECTRICAL CHARACTERISTICS

(V_{CC} = V_{CC1} = V_{CC2} = V_{CC4} = V_{CC5} = 3.0V to 3.6V, FS = 0V, T_A = T_{MIN} to T_{MAX}, unless otherwise noted. Typical values are at V_{CC} = V_{CC1} = V_{CC2} = V_{CC4} = V_{CC5} = 3.3V and T_A = +25°C.) (Notes 1, 2, 3)

PARAMETER	SYMBOL	CONDITIONS		MIN	TYP	MAX	UNITS
Supply Voltage	V_S			3.0	3.3	3.6	V
Switch Frequency	f_{SWL}	FS = 0V			600		kHz
	f_{SWH}	FS = V_{CC} or open			900		
Operating Supply Current	I_{CC}	MAX3480A, DE´ = V_{CC} or open	R_L = ∞		180	260	mA
			R_L = 54Ω		280		
		MAX3480B, DE´ = V_{CC} or open	R_L = ∞		120	200	
			R_L = 54Ω		240		
Shutdown Supply Current (Note 3)	I_{SHDN}	SD = V_{CC3}			0.2		µA
FS Input Threshold	V_{FSH}	High		2.4			V
	V_{FSL}	Low				0.8	
FS Input Pull-Up Current	I_{FSL}	FS low				50	µA
FS Input Leakage Current	I_{FSM}	FS high			10		pA
Input High Voltage	V_{IH}	DE´, DI´ (Figure 1)		V_{CC} - 0.4			V
Input Low Voltage	V_{IL}	DE´, DI´ (Figure 1)				0.4	V
Isolation Resistance	R_{ISO}	T_A = +25°C, V_{ISO} = 50V_{DC}		100	10,000		MΩ
Isolation Capacitance	C_{ISO}	T_A = +25°C, V_{ISO} = 50V_{DC}			10		pF
Differential Driver Output (no load)	V_{OD1}					8	V
Differential Driver Output (with load)	V_{OD2}	R = 50Ω (RS-422)		2			V
		R = 27Ω (RS-485), Figure 3		1.5		5	
Change in Magnitude of Driver Output Voltage for Complementary Output States	ΔV_{OD}	R = 27Ω or 50Ω, Figure 3	Differential			0.3	V
			Common Mode			0.3	
Driver Common-Mode Output	V_{OC}	R = 27Ω or 50Ω, Figure 4				4	V

ELECTRICAL CHARACTERISTICS (continued)

(V_{CC} = V_{CC1} = V_{CC2} = V_{CC4} = V_{CC5} = 3.0V to 3.6V, FS = 0V, T_A = T_{MIN} to T_{MAX}, unless otherwise noted. Typical values are at V_{CC} = V_{CC1} = V_{CC2} = V_{CC4} = V_{CC5} = 3.3V and T_A = +25°C.) (Notes 1, 2, 3)

PARAMETER	SYMBOL	CONDITIONS			MIN	TYP	MAX	UNITS
Input Current (A, B)	ISO I_{IN}	DE´ = 0V, V_{CC} = 0V or 3.6V	MAX3480A	V_{IN} = 12V			1.0	mA
				V_{IN} = -7V			-0.8	
			MAX3480B	V_{IN} = 12V			0.25	
				V_{IN} = -7V			-0.2	
Receiver Input Resistance	R_{IN}	-7V ≤ V_{CM} ≤ 12V	MAX3480A		12			kΩ
			MAX3480B			48		
Receiver Differential Threshold	V_{TH}	-7V ≤ V_{CM} ≤ 12V			-0.2		0.2	V
Receiver Input Hysteresis	ΔV_{TH}	V_{CM} = 0V				70		mV
$\overline{\text{Receiver Output}}$/Receiver Output Low Voltage	V_{OL}	DI´ = V_{CC}					0.4	V
$\overline{\text{Receiver Output}}$/Receiver Output High Current	I_{OH}	V_{OUT} = 3.6V, DI´ = 0V					250	µA
Driver Short-Circuit Current	ISO I_{OSD}	-7V ≤ V_O ≤ 12V (Note 4)				100		mA

SWITCHING CHARACTERISTICS—MAX3480A

(V_{CC} = V_{CC1} = V_{CC2} = V_{CC4} = V_{CC5} = 3.0V to 3.6V, FS = 0V, T_A = T_{MIN} to T_{MAX}, unless otherwise noted. Typical values are at V_{CC} = V_{CC1} = V_{CC2} = V_{CC4} = V_{CC5} = 3.3V and T_A = +25°C.)

PARAMETER	SYMBOL	CONDITIONS	MIN	TYP	MAX	UNITS
Driver Input to Output Propagation Delay	t_{PLH}	Figures 4, 6; R_{DIFF} = 54Ω, C_{L1} = C_{L2} = 100pF		100	275	ns
	t_{PHL}			100	275	
Driver Output Skew (Note 5)	t_{SKEW}	Figures 4, 6; R_{DIFF} = 54Ω, C_{L1} = C_{L2} = 100pF		25	90	ns
Driver Rise or Fall Time	t_R, t_F	Figures 4, 6; R_{DIFF} = 54Ω, C_{L1} = C_{L2} = 100pF		15	40	ns
Driver Enable to Output High	t_{ZH}	Figures 5, 7; C_L = 100pF, S2 closed		0.2	1.5	µs
Driver Enable to Output Low	t_{ZL}	Figures 5, 7; C_L = 100pF, S1 closed		0.2	1.5	µs
Driver Disable Time from High	t_{HZ}	Figures 5, 7; C_L = 15pF, S2 closed		0.3	1.5	µs
Driver Disable Time from Low	t_{LZ}	Figures 5, 7; C_L = 15pF, S1 closed		0.3	1.5	µs
Receiver Input to Output Propagation Delay	t_{PLH}	Figures 4, 8; R_{DIFF} = 54Ω, C_{L1} = C_{L2} = 100pF		100	225	ns
	t_{PHL}			100	225	
$\lvert t_{PLH} - t_{PHL} \rvert$ Differential Receiver Skew	t_{SKD}	Figures 4, 8; R_{DIFF} = 54Ω, C_{L1} = C_{L2} = 100pF		20		ns
Maximum Data Rate	f_{MAX}	t_{PLH}, t_{PHL} < 50% of data period	2.5			Mbps

SWITCHING CHARACTERISTICS—MAX3480B

(V_{CC} = V_{CC1} = V_{CC2} = V_{CC4} = V_{CC5} = 3.0V to 3.6V, FS = 0V, T_A = T_{MIN} to T_{MAX}, unless otherwise noted. Typical values are at V_{CC} = V_{CC1} = V_{CC2} = V_{CC4} = V_{CC5} = 3.3V and T_A = +25°C.)

PARAMETER	SYMBOL	CONDITIONS	MIN	TYP	MAX	UNITS
Driver Input to Output Propagation Delay	t_{PLH}	Figures 4, 6; R_{DIFF} = 54Ω, C_{L1} = C_{L2} = 100pF		1.0	2.0	µs
	t_{PHL}			1.0	2.0	
Driver Output Skew	t_{SKEW}	Figures 4, 6; R_{DIFF} = 54Ω, C_{L1} = C_{L2} = 100pF		100	800	ns
Driver Rise or Fall Time	t_R, t_F	Figures 4, 6; R_{DIFF} = 54Ω, C_{L1} = C_{L2} = 100pF		1.0	2.0	µs
Driver Enable to Output High	t_{ZH}	Figures 5, 7; C_L = 100pF, S2 closed		50	100	µs
Driver Enable to Output Low	t_{ZL}	Figures 5, 7; C_L = 100pF, S1 closed		50	100	µs
Driver Disable Time from Low	t_{LZ}	Figures 5, 7; C_L = 15pF, S1 closed		13	50	µs
Driver Disable Time from High	t_{HZ}	Figures 5, 7; C_L = 15pF, S2 closed		13	50	µs
Receiver Input to Output Propagation Delay	t_{PLH}	Figures 4, 8; R_{DIFF} = 54Ω, C_{L1} = C_{L2} = 100pF		0.8	2.0	µs
	t_{PHL}			0.8	2.0	
$\lvert t_{PLH} - t_{PHL} \rvert$ Differential Receiver Skew	t_{SKD}	Figures 4, 8; R_{DIFF} = 54Ω, C_{L1} = C_{L2} = 100pF		50		ns
Maximum Data Rate	f_{MAX}	t_{PLH}, t_{PHL} < 50% of data period	0.25			Mbps

Note 1: All currents into device pins are positive; all currents out of device pins are negative. All voltages are referenced to logic-side ground (GND1, GND2), unless otherwise specified.

Note 2: For DE´ and DI´ pin descriptions, see *Detailed Block Diagram* and *Typical Application Circuit* (Figure 1 for MAX3480A/MAX3480B).

Note 3: Shutdown supply current is the current at V_{CC1} when shutdown is enabled.

Note 4: Applies to peak current. See *Typical Operating Characteristics* and *Applications Information*.

Typical Operating Characteristics

($V_{CC_}$ = 3.3V, T_A = +25°C, unless otherwise noted.)

DRIVER DIFFERENTIAL OUTPUT VOLTAGE vs. TEMPERATURE

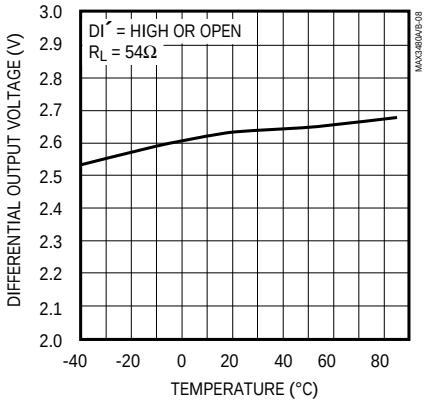

OUTPUT CURRENT vs. DRIVER OUTPUT HIGH VOLTAGE

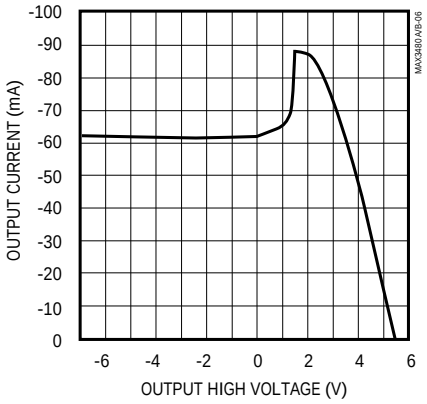

OUTPUT CURRENT vs. DRIVER OUTPUT LOW VOLTAGE

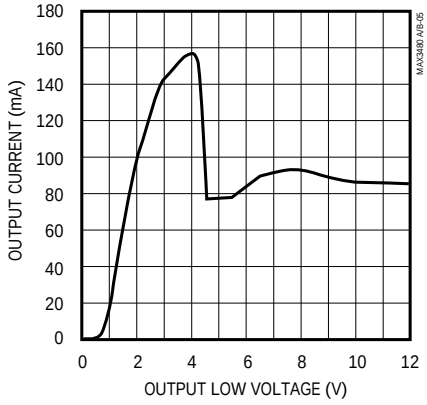

RECEIVER OUTPUT LOW VOLTAGE vs. TEMPERATURE

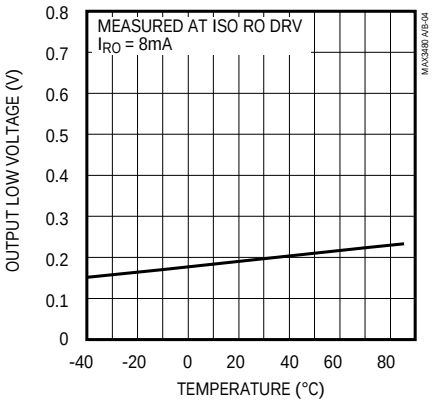

RECEIVER OUTPUT HIGH VOLTAGE vs. TEMPERATURE

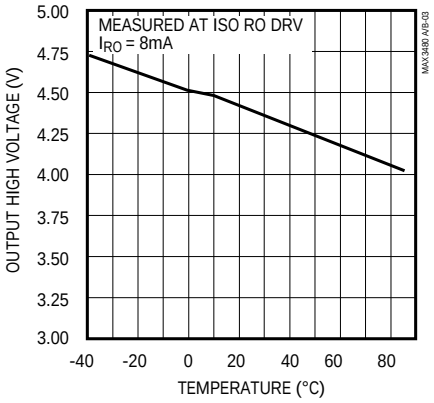

OUTPUT CURRENT vs. RECEIVER OUTPUT LOW VOLTAGE

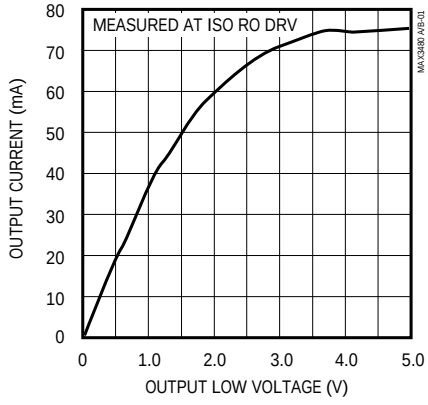

OUTPUT CURRENT vs. RECEIVER OUTPUT HIGH VOLTAGE

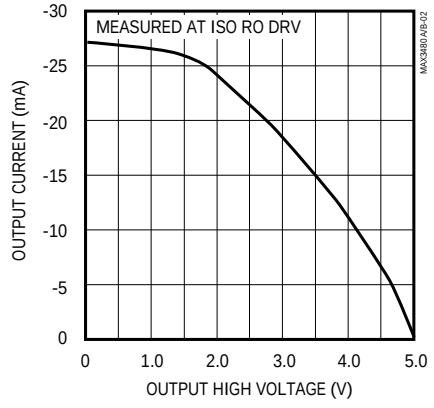

Complete, Isolated, 3.3V RS-485/RS-422 Data Interface

Typical Operating Characteristics (continued)

($V_{CC_}$ = 3.3V, T_A = +25°C, unless otherwise noted.)

MAX3480A DRIVER INPUT (AB) AND RECEIVER OUTPUT (RO)

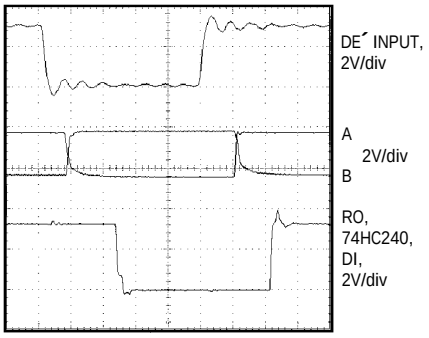

100ns/div
CIRCUIT OF FIGURE 2, TERMINATION: 100Ω

MAX3480A DRIVER ENABLE (AB) AND RECEIVER OUTPUT (RO)

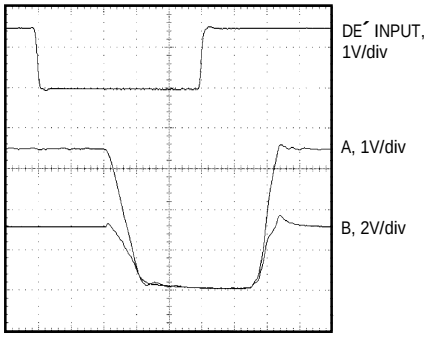

100ns/div
CIRCUIT OF FIGURE 2, TERMINATION: 100Ω

MAX3480A SUPPLY CURRENT vs. SUPPLY VOLTAGE

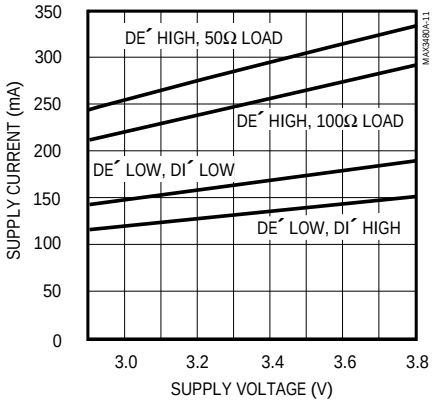

MAX3480B DRIVER INPUT (AB) AND RECEIVER OUTPUT (RO)

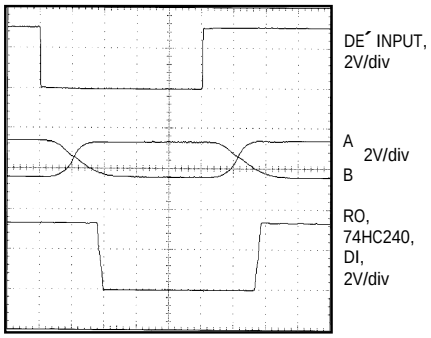

1µs/div
CIRCUIT OF FIGURE 2, TERMINATION: 100Ω

MAX3480B DRIVER ENABLE (AB) AND RECEIVER OUTPUT (RO)

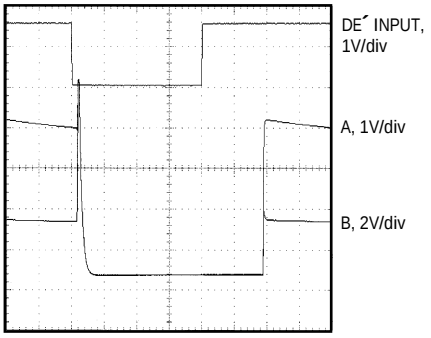

25µs/div
CIRCUIT OF FIGURE 2, TERMINATION: 100Ω

MAX3480B SUPPLY CURRENT vs. SUPPLY VOLTAGE

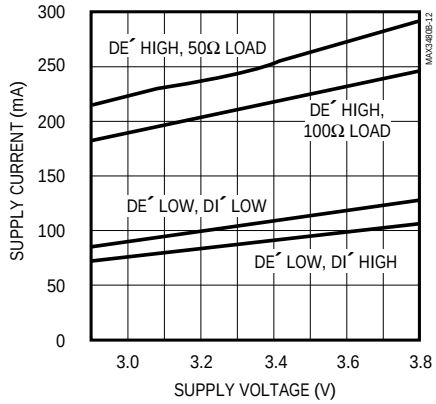

DRIVER ENABLE TIME vs. TEMPERATURE

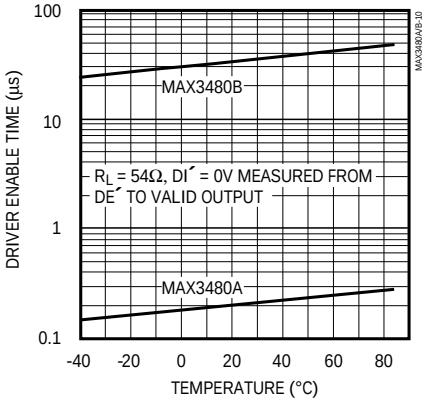

DRIVER DISABLE TIME vs. TEMPERATURE

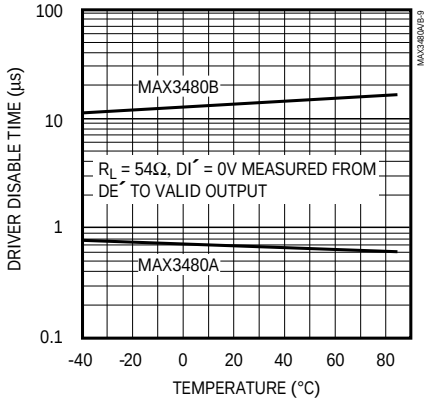

Pin Description

PIN	NAME	FUNCTION
PINS ON THE NON-ISOLATED SIDE		
1	V_{CC1}	Logic-Side (non-isolated side) +3.3V Supply Voltage Input. Connect to pins 2, 10, and 14.
2	V_{CC2}	Logic-Side (non-isolated side) +3.3V Supply Voltage Input. Connect to pins 1, 10, and 14.
3, 4	D1, D2	Boost-Voltage Generator Outputs. See Figures 1 and 2.
5, 12	GND1, GND2	Logic-Side Ground Inputs. Must be connected; not internally connected.
6	FS	Frequency Switch Input. If FS = V_{CC}, switch frequency is high; if FS = 0V, switch frequency is low (normal connection).
7	SD	Power-Supply Shutdown Input. Must be connected to logic ground.
8	V_{CC3}	Boosted V+ Voltage Input. Must be connected as shown in Figures 1 and 2.
9	DI	Driver Input. With DE´ high, a low on DI´ forces output A low and output B high. Similarly, a high on DI´ forces output A high and output B low. Drives internal LED cathode through R1 (Table 1 of Figure 2).
10	V_{CC4}	Logic-Side (non-isolated side) +3.3V Supply Voltage Input. Connect to pins 1, 2, and 14.
11	DE	Driver-Enable Input. The driver outputs, A and B, are enabled by bringing DE´ high. The driver outputs are high impedance when DE´ is low. If the driver outputs are enabled, the device functions as a line driver. While the driver outputs are high impedance, the device functions as a line receiver. Drives internal LED cathode through R2 (Table 1 of Figure 2).
13	$\overline{RO}$	Receiver Output. If A > B by 200mV, $\overline{RO}$ will be low; if A < B by 200mV, $\overline{RO}$ will be high. Open collector; must have pull-up (R3) to V_{CC} (Table 1 of Figure 2).
14	V_{CC5}	Logic-Side (non-isolated side) +3.3V Supply Voltage Input. Connect to pins 1, 2, and 10.

Pin Description (continued)

PIN	NAME	FUNCTION
PINS ON THE ISOLATED RS-485/RS-422 SIDE		
15	ISO RO LED	Isolated Receiver-Output LED Anode (input). If A > B by 200mV, ISO RO LED will be high; if A < B by 200mV, ISO RO LED will be low.
16	ISO COM2	Isolated-Supply Common Input. Connect to ISO COM1.
17	ISO DE DRV	Isolated Driver-Enable Drive Input. The driver outputs, A and B, are enabled by bringing DE´ high. The driver outputs are high impedance when DE´ is low. If the driver outputs are enabled, the device functions as a line driver. While the driver outputs are high impedance, the device functions as a line receiver. Open collector output; must have pull-up (R4) to ISO V_{CC} and be connected to ISO DE IN for normal operation (Table 1 of Figure 2).
18	ISO V_{CC2}	Isolated-Supply Positive Input Voltage. Connect to ISO V_{CC1}.
19	ISO DI DRV	Isolated Driver-Input Drive. With DE´ high, a low on DI´ forces output A low and output B high. Similarly, a high on DI´ forces output A high and output B low. Open-collector output; must have pull-up (R5) to ISO V_{CC} and be connected to ISO DI IN for normal operation (Table 1 of Figure 2).
20	ISO COM1	Isolated-Supply Common Output. Connect to ISO COM2. If RS-485 wires have a shield, connect ISO COM1 to shield via 100Ω resistor.
21	ISO DE IN	Isolated Driver-Enable Input. Connect to ISO DE DRV for normal operation.
22	ISO DI IN	Isolated Driver Input. Connect to ISO DI DRV for normal operation.
23	A	Noninverting Driver Output and Noninverting Receiver Input.
24	ISO RO DRV	Isolated Receiver-Output Drive. Connect to ISO RO LED through R6 (Table 1 of Figure 2).
25	B	Inverting Driver Output and Inverting Receiver Input
26	ISO V_{CC1}	Isolated Supply Positive Output Voltage. Connect to ISO V_{CC2}.
27, 28	AC2, AC1	Internal Connections. Leave these pins unconnected.

Note: For DE´ and DI´ pin descriptions, see *Detailed Block Diagram* and *Typical Application Circuit*.

Detailed Description

The MAX3480A/MAX3480B are electrically isolated, RS-485/RS-422 data-communications interface solutions. Transceivers, optocouplers, a power driver, and a transformer are in one standard 28-pin DIP package. Signals and power are internally transported across the isolation barrier (Figure 1). Power is transferred from the logic side (non-isolated side) to the isolated side of the barrier through a center-tapped transformer. Signals cross the barrier through high-speed optocouplers. A single +3.3V supply on the logic side powers both sides of the interface.

The MAX3480B features reduced-slew-rate drivers that minimize EMI and reduce reflections caused by improperly terminated cables, allowing error-free transmission at data rates up to 250kbps. The MAX3480A's driver slew rates are not limited, allowing transmission rates up to 2.5Mbps.

The frequency-select FS is connected to GND_ in normal operation, which selects a switching frequency of approximately 600kHz. Connect to high for a higher 900kHz switching frequency.

Drivers are short-circuit current limited and are protected against excessive power dissipation by thermal

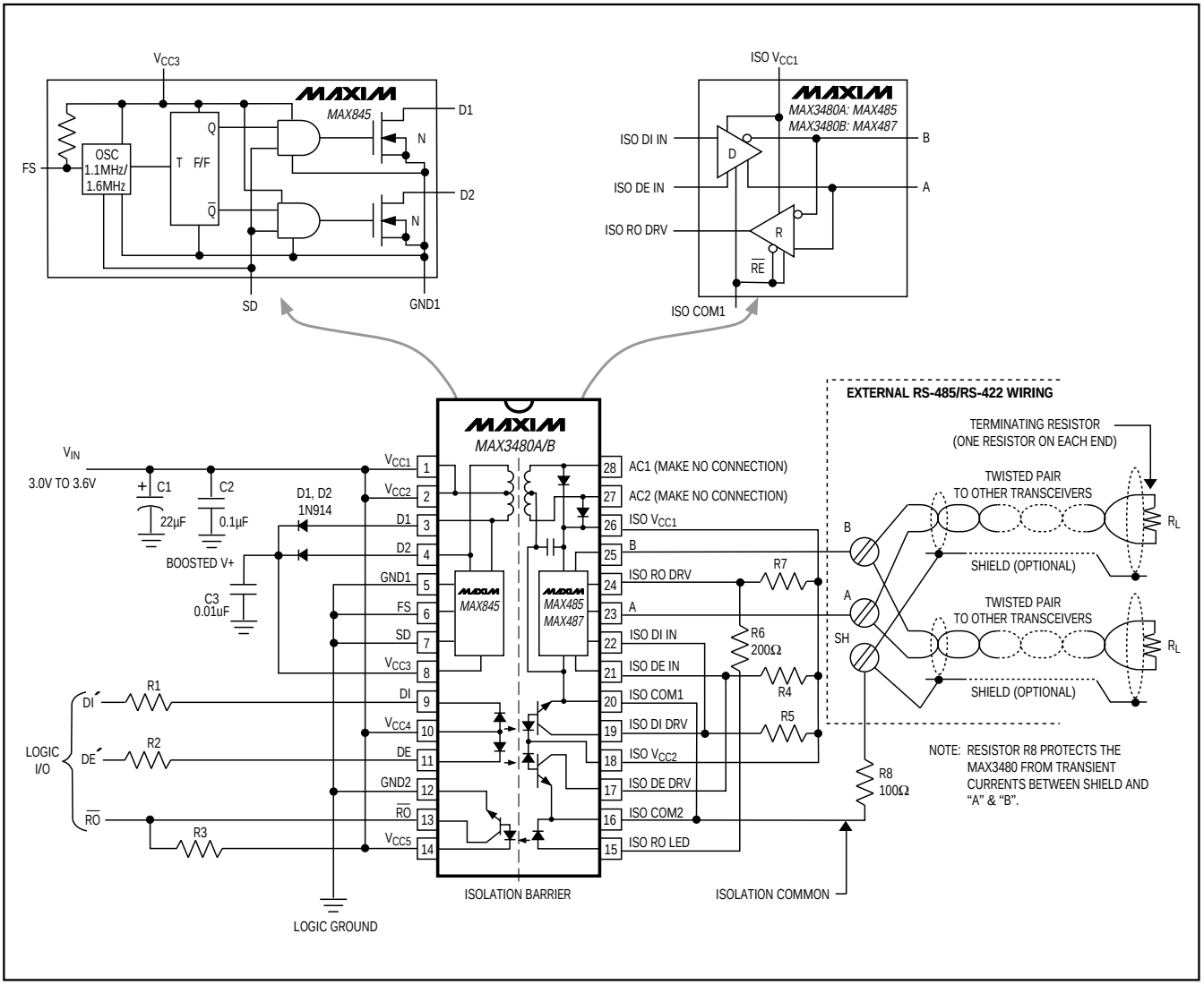

Figure 1. Detailed Block Diagram

Complete, Isolated, 3.3V RS-485/RS-422 Data Interface

shutdown circuitry that puts the driver outputs into a high-impedance state. The receiver input has a fail-safe feature that guarantees a logic-high output if the input is open circuit.

The driver outputs are enabled by bringing DE´ high. Driver-enable times are typically 200ns for the MAX3480A and 50µs for the MAX3480B. Allow time for the devices to be enabled before sending data. When enabled, driver outputs function as line drivers. Driver outputs are high impedance when DE´ is low. While outputs are high impedance, they function as line receivers.

The MAX3480A/MAX3480B typically withstand 1600V_{RMS} (1 minute) or 2000V_{RMS} (1 second). The isolated outputs of these devices meet all RS-485/RS-422 specifications. The logic inputs can be driven from any TTL/CMOS-logic family with a series resistor, and the received data output can directly drive any of the TTL/CMOS-logic families with only a resistive pull-up.

Boost Voltage

The MAX3480 requires external diodes on the primary of the transformer to develop the boost voltage for the power oscillator. In normal operation, whenever one of the oscillator outputs (D1 and D2) goes low, the other

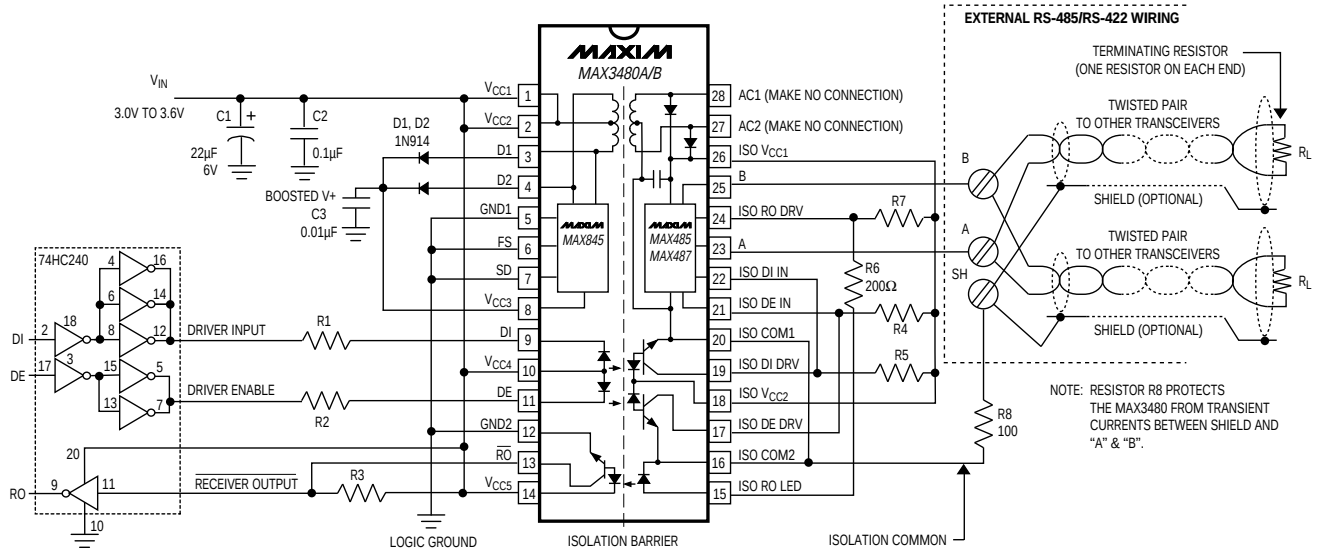

Table 1. Pull-Up and LED Drive Resistors

PART	R1 (Ω)	R2 (Ω)	R3 (Ω)	R4 (Ω)	R5 (Ω)	R6 (Ω)	R7 (Ω)
MAX3480A	150	130	680	3000	1000	200	Open
MAX3480B	130	330	2000	2200	3000	200	470

Figure 2. Typical Application Circuit

Test Circuits

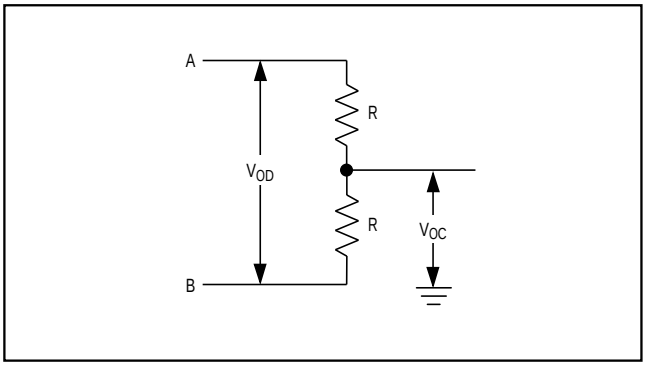

Figure 3. Driver DC Test Load

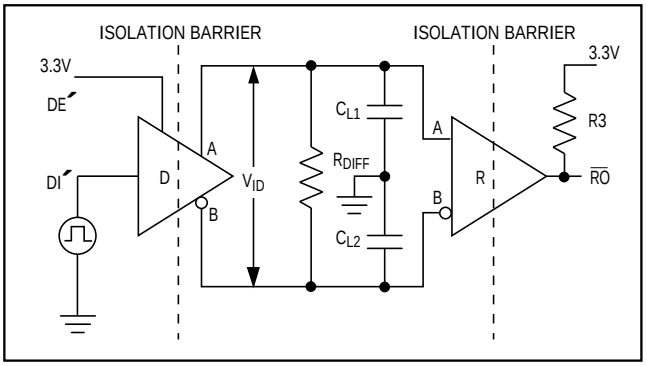

Figure 4. Driver/Receiver Timing Test Circuit

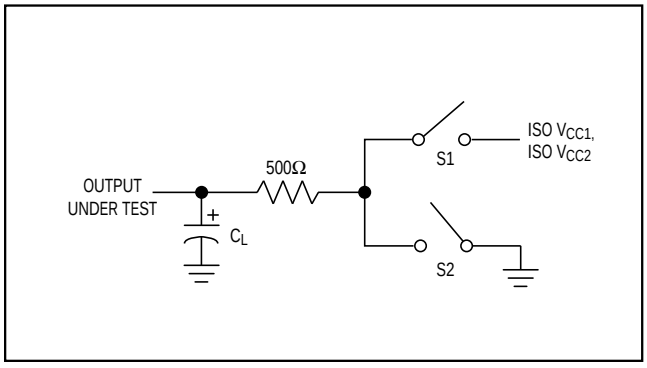

Figure 5. Driver Timing Test Load

Switching Waveforms

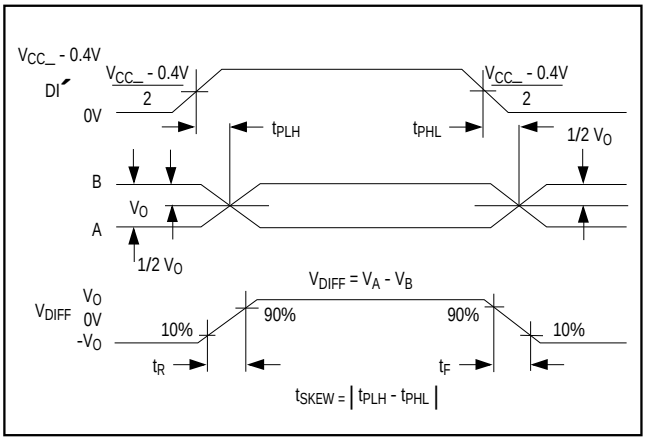

Figure 6. Driver Propagation Delays and Transition Times

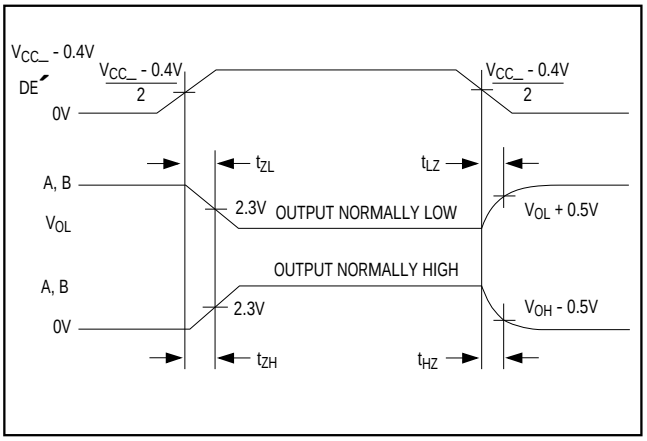

Figure 7. Driver Enable and Disable Times

Switching Waveforms (continued)

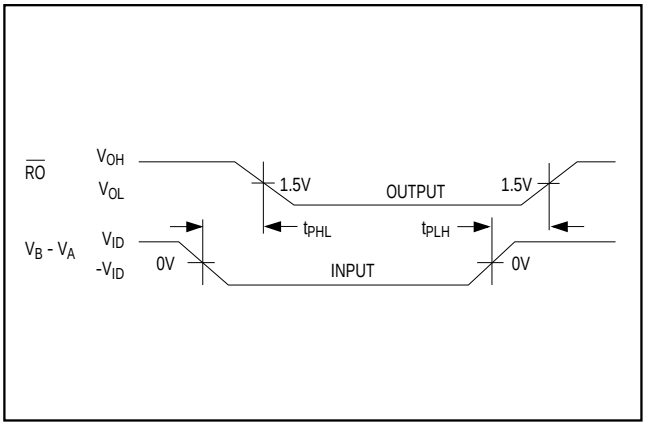

Figure 8. Receiver Propagation Delays

Function Tables

Table 2. Transmitting

INPUTS		OUTPUTS	
DE´	DI´	B	A
1	1	0	1
1	0	1	0
0	X	High-Z	High-Z

X = Don't care
High-Z = High impedance

Table 3. Receiving

INPUTS		OUTPUT
DE´	A-B	$\overline{RO}$
0	≥ +0.2V	0
0	≤ -0.2V	1
0	Inputs open	0

goes to approximately double the supply voltage. Since the circuit is symmetrical, the two outputs can be combined with diodes, filtered, and used to power the oscillator itself.

The diodes on the primary side may be any fast-switching, small-signal diodes, such as the 1N914, 1N4148, or CMPD2838. The nominal value of the primary filter capacitor C3 is 0.01µF.

Driver Output Protection

There are two mechanisms to prevent excessive output current and power dissipation caused by faults or by bus contention. A foldback current limit on the output stage provides immediate protection against short circuits over the whole common-mode voltage range (see *Typical Operating Characteristics*). In addition, a thermal shutdown circuit forces the driver outputs into a high-impedance state if the die temperature rises excessively.

Resistor R8 provides additional protection by current limiting between the shield and the two signal wires. In the event that shielded cable is used and an external voltage or transient is inadvertently applied between the shield and the signal wires, the MAX3480 can be damaged. Although unlikely, this condition can occur during installation.

The MAX3480 provides electrical isolation between logic ground and signal paths; it does not provide isolation from external shields and the signal paths. When in doubt, do not connect the shield. The MAX3480 can be damaged if resistor R8 is shorted out.

Applications Information

The MAX3480A/MAX3480B are designed for bidirectional data communications on multipoint bus-transmission lines. Figure 9 shows a typical network application circuit. To minimize reflections, terminate the line at both ends with its characteristic impedance, and keep stub lengths off the main line as short as possible. The slew-rate-limited MAX3480B is more tolerant of imperfect termination and stubs off the main line.

The MAX3480A/MAX3480B are specified and characterized using the resistor values shown in Table 1 of Figure 2. Altering the recommended values can degrade performance.

The DI and DE inputs are the cathodes of LEDs whose anodes are connected to V_{CC}. These points are best driven by a 3.3V CMOS-logic gate with a series resistor to limit the current. The resistor values shown in Table 1 are recommended when the 74HC240 gate or equivalent is used. These values may need to be adjusted if a driving gate with dissimilar series resistance is used. DI and DE are intended to be driven through a series current-limiting resistor. Directly grounding these pins destroys the device.

Complete, Isolated, 3.3V RS-485/RS-422 Data Interface

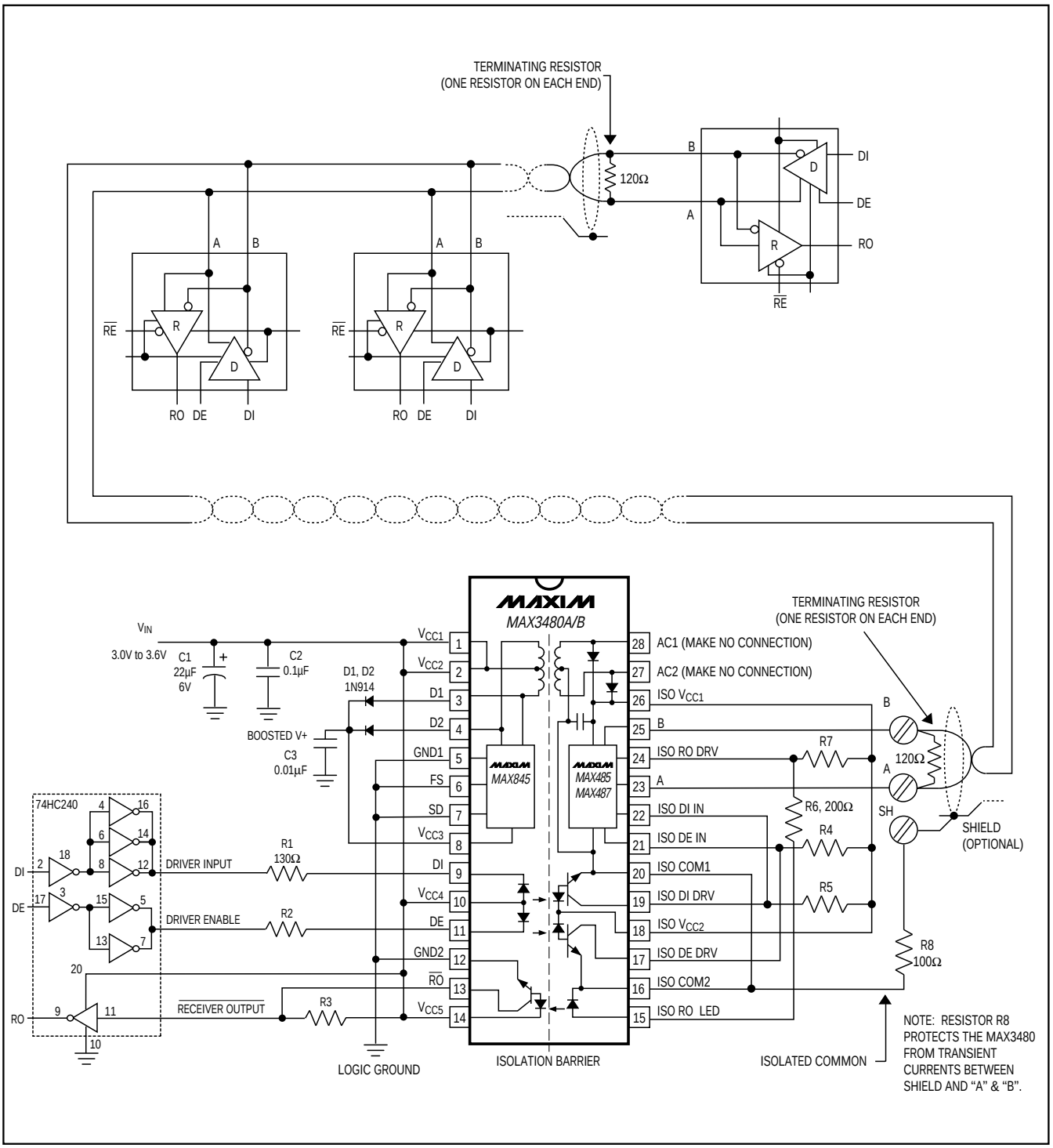

Figure 9. Typical RS-485/RS-422 Network

Table 4. Maxim's Isolated RS-485 Product Family

PART	No. OF Tx/Rx	GUARANTEED DATA RATE (Mbps)	FULL/HALF DUPLEX	SLEW-RATE LIMITED	No. OF Tx/Rx ON BUS	SUPPLY VOLTAGE (V)
MAX1480A	1/1	2.50	Half	No	32	5.0
MAX1480B	1/1	0.25	Half	Yes	32	5.0
MAX1490A	1/1	2.50	Full	No	32	5.0
MAX1490B	1/1	0.25	Full	Yes	32	5.0
MAX3480A	1/1	2.50	Half	No	32	3.3
MAX3480B	1/1	0.25	Half	Yes	128	3.3

Package Information

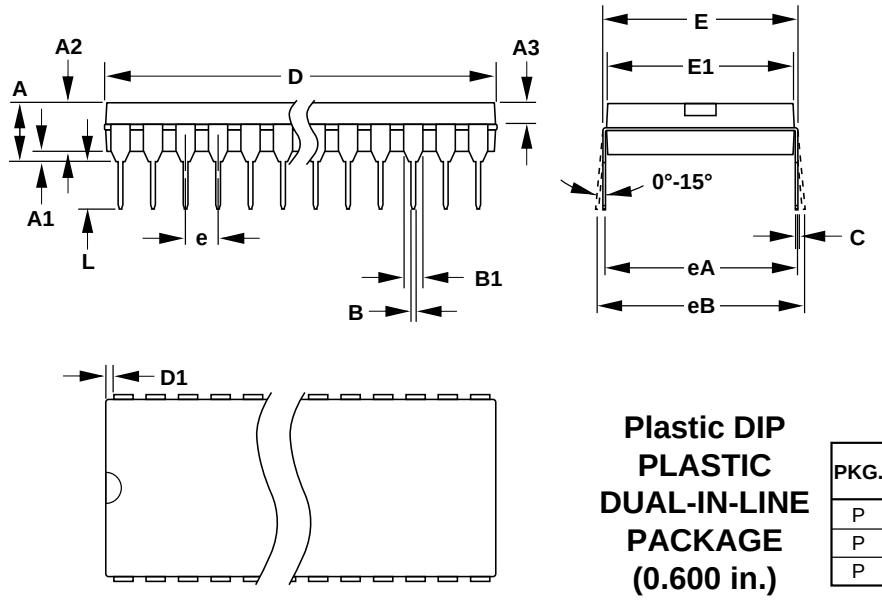

Plastic DIP PLASTIC DUAL-IN-LINE PACKAGE (0.600 in.)

DIM	INCHES		MILLIMETERS	
	MIN	MAX	MIN	MAX
A	–	0.200	–	5.08
A1	0.015	–	0.38	–
A2	0.125	0.175	3.18	4.45
A3	0.055	0.080	1.40	2.03
B	0.016	0.020	0.41	0.51
B1	0.045	0.065	1.14	1.65
C	0.008	0.012	0.20	0.30
D1	0.050	0.090	1.27	2.29
E	0.600	0.625	15.24	15.88
E1	0.525	0.575	13.34	14.61
e	0.100	–	2.54	–
eA	0.600	–	15.24	–
eB	–	0.700	–	17.78
L	0.120	0.150	3.05	3.81

PKG.	DIM	PINS	INCHES		MILLIMETERS	
			MIN	MAX	MIN	MAX
P	D	24	1.230	1.270	31.24	32.26
P	D	28	1.430	1.470	36.32	37.34
P	D	40	2.025	2.075	51.44	52.71

21-0044A

Complete, Isolated, 3.3V RS-485/RS-422 Data Interface

Maxim cannot assume responsibility for use of any circuitry other than circuitry entirely embodied in a Maxim product. No circuit patent licenses are implied. Maxim reserves the right to change the circuitry and specifications without notice at any time.

© 1996 Maxim Integrated Products Printed USA MAXIM is a registered trademark of Maxim Integrated Products.