MAX3224–MAX3227/ MAX3244/MAX3245

1µA Supply Current, 1Mbps, 3.0V to 5.5V, RS-232 Transceivers with AutoShutdown Plus

General Description

The MAX3224–MAX3227/MAX3244/MAX3245 are 3V-powered EIA/TIA-232 and V.28/V.24 communications interfaces with automatic shutdown/wakeup features and high data-rate capabilities.

All devices achieve a 1µA supply current using Maxim's revolutionary AutoShutdown Plus™ feature. These devices automatically enter a low-power shutdown mode when the RS-232 cable is disconnected or the transmitters of the connected peripherals are inactive, and the UART driving the transmitter inputs is inactive for more than 30 seconds. They turn on again when they sense a valid transition at any transmitter or receiver input. AutoShutdown Plus saves power without changes to the existing BIOS or operating system.

The MAX3225/MAX3227/MAX3245 also feature MegaBaud™ operation, guaranteeing 1Mbps for high-speed applications such as communicating with ISDN modems. The MAX3224/MAX3226/MAX3244 guarantee 250kbps operation. The transceivers have a proprietary low-dropout transmitter output stage enabling true RS-232 performance from a +3.0V to +5.5V supply with a dual charge pump. The charge pump requires only four small 0.1µF capacitors for operation from a 3.3V supply. The MAX3224–MAX3227 feature a logic-level output (READY) that asserts when the charge pump is regulating and the device is ready to begin transmitting.

All devices are available in a space-saving TQFN, TSSOP, and SSOP packages.

Applications

Notebook, Subnotebook, and Palmtop Computers

Cellular Phones

Battery-Powered Equipment

Handheld Equipment

Peripherals

Printers

AutoShutdown Plus, MegaBaud, and UCSP are trademarks of Maxim Integrated Products, Inc.

Next Generation Device Features

- **For Smaller Packaging:**
  MAX3228/MAX3229: +2.5V to +5.5V RS-232 Transceivers in UCSP™
- **For Low-Voltage or Data Cable Applications:**
  MAX3380E/MAX3381E: +2.35V to +5.5V, 1µA, 2 Tx/2 Rx RS-232 Transceivers with ±15kV ESD-Protected I/O and Logic Pins
- **For Integrated ESD Protection:**
  MAX3222E/MAX3232E/MAX3237E/MAX3241E/ MAX3246E: ±15kV ESD-Protected, Down to 10nA, +3.0V to +5.5V, Up to 1Mbps, True RS-232 Transceivers (MAX3246E Available in UCSP)

Ordering Information

PART	TEMP RANGE	PIN-PACKAGE
MAX3224CPP+	0°C to +70°C	20 PDIP
MAX3224CAP+	0°C to +70°C	20 SSOP
MAX3224CTP+	0°C to +70°C	20 TQFN-EP*
MAX3224CUP+	0°C to +70°C	20 TSSOP
MAX3224EPP+	-40°C to +85°C	20 PDIP
MAX3224EAP+	-40°C to +85°C	20 SSOP
MAX3224ETP+	-40°C to +85°C	20 TQFN-EP*
MAX3224EUP+	-40°C to +85°C	20 TSSOP

+Denotes a lead(Pb)-free/RoHS-compliant package.
**EP = Exposed pad.*

Ordering Information continued at end of data sheet.

Selector Guide

PART	NO. OF DRIVERS/ RECEIVERS	GUARANTEED DATA RATE (bps)	READY OUTPUT	Auto-Shutdown Plus
MAX3224	2/2	250k	✔	✔
MAX3225	2/2	1M	✔	✔
MAX3226	1/1	250k	✔	✔
MAX3227	1/1	1M	✔	✔
MAX3244	3/5	250k	—	✔
MAX3245	3/5	1M	—	✔

For pricing, delivery, and ordering information, please contact Maxim Direct at 1-888-629-4642, or visit Maxim's website at www.maximintegrated.com.

19-1289; Rev 5; 2/11

ABSOLUTE MAXIMUM RATINGS

V_{CC} to GND .....-0.3V to +6V
V+ to GND (Note 1) .....-0.3V to +7V
V- to GND (Note 1) .....+0.3V to -7V
V+ + |V-| (Note 1) .....+13V
Input Voltages
T_IN, FORCEON, $\overline{\text{FORCEOFF}}$ to GND ..... -0.3V to +6V
R_IN to GND .....±25V
Output Voltages
T_OUT to GND .....±13.2V
R_OUT, $\overline{\text{INVALID}}$, READY to GND .....-0.3V to (V_{CC} + 0.3V)
Short-Circuit Duration
T_OUT to GND .....Continuous

Continuous Power Dissipation (T_A = +70°C)
16-Pin SSOP (derate 7.14mW/°C above +70°C) 571mW
20-Pin PDIP (derate 11.11mW/°C above +70°C) 889mW
20-Pin TQFN (derate 21.3mW/°C above +70°C).....1702.1mW
20-Pin SSOP (derate 8.00mW/°C above +70°C) 640mW
20-Pin TSSOP (derate 7.00mW/°C above +70°C) 559mW
28-Pin SO (W) (derate 12.5mW/°C above +70°C) 1W
28-Pin SSOP (derate 9.52mW/°C above +70°C) 762mW
Operating Temperature Ranges
MAX32_ _C_ _.....0°C to +70°C
MAX32_ _E_ _.....-40°C to +85°C
Storage Temperature Range .....-65°C to +160°C
Lead Temperature (soldering, 10s) .....+300°C
Soldering Temperature (reflow) .....+260°C

Note 1: V+ and V- can have maximum magnitudes of 7V, but their absolute difference cannot exceed 13V.

Stresses beyond those listed under "Absolute Maximum Ratings" may cause permanent damage to the device. These are stress ratings only, and functional operation of the device at these or any other conditions beyond those indicated in the operational sections of the specifications is not implied. Exposure to absolute maximum rating conditions for extended periods may affect device reliability.

ELECTRICAL CHARACTERISTICS

(V_{CC} = +3V to +5.5V, C1–C4 = 0.1µF, tested at 3.3V ±10%; C1 = 0.047µF, C2–C4 = 0.33µF, tested at 5.0V ±10%; T_A = T_{MIN} to T_{MAX}, unless otherwise noted. Typical values are at T_A = +25°C.)

PARAMETER	SYMBOL	CONDITIONS		MIN	TYP	MAX	UNITS
DC CHARACTERISTICS (V_{CC} = 3.3V or 5.0V, T_A = +25°C)							
Supply Current, AutoShutdown Plus		FORCEON = GND, $\overline{\text{FORCEOFF}}$ = V_{CC}, all R_IN idle, all T_IN idle			1	10	µA
Supply Current, Shutdown		$\overline{\text{FORCEOFF}}$ = GND			1	10	µA
Supply Current, AutoShutdown Plus Disabled		FORCEON = $\overline{\text{FORCEOFF}}$ = V_{CC}, no load			0.3	1	mA
LOGIC INPUTS AND RECEIVER OUTPUTS							
Input Logic Threshold Low		T_IN, FORCEON, $\overline{\text{FORCEOFF}}$				0.8	V
Input Logic Threshold High		T_IN, FORCEON, $\overline{\text{FORCEOFF}}$	V_{CC} = 3.3V	2			V
			V_{CC} = 5.0V	2.4			
Transmitter Input Hysteresis					0.5		V
Input Leakage Current		T_IN, FORCEON, $\overline{\text{FORCEOFF}}$			±0.01	±1	µA
Output Leakage Current		R_OUT (MAX3244/MAX3245), receivers disabled			±0.05	±10	µA
Output Voltage Low		I_{OUT} = 1.6mA				0.4	V
Output Voltage High		I_{OUT} = -1.0mA		V_{CC} - 0.6	V_{CC} - 0.1		V
RECEIVER INPUTS							
Input Voltage Range				-25		+25	V
Input Threshold Low		T_A = +25°C	V_{CC} = 3.3V	0.6	1.2		V
			V_{CC} = 5.0V	0.8	1.5		
Input Threshold High		T_A = +25°C	V_{CC} = 3.3V		1.5	2.4	V
			V_{CC} = 5.0V		1.8	2.4	
Input Hysteresis					0.5		V
Input Resistance		T_A = +25°C		3	5	7	kΩ

ELECTRICAL CHARACTERISTICS (continued)

(V_{CC} = +3V to +5.5V, C1–C4 = 0.1µF, tested at 3.3V ±10%; C1 = 0.047µF, C2–C4 = 0.33µF, tested at 5.0V ±10%; T_A = T_{MIN} to T_{MAX}, unless otherwise noted. Typical values are at T_A = +25°C.)

PARAMETER	SYMBOL	CONDITIONS		MIN	TYP	MAX	UNITS
TRANSMITTER OUTPUTS							
Output Voltage Swing		All transmitter outputs loaded with 3kΩ to ground		±5	±5.4		V
Output Resistance		V_{CC} = V+ = V- = 0, transmitter outputs = ±2V		300	10M		Ω
Output Short-Circuit Current						±60	mA
Output Leakage Current		V_{CC} = 0 or 3V to 5.5V, V_{OUT} = ±12V, Transmitters disabled				±25	µA
MOUSE DRIVEABILITY (MAX3244/MAX3245)							
Transmitter Output Voltage		T1IN = T2IN = GND, T3IN = V_{CC}, T3OUT loaded with 3kΩ to GND, T1OUT and T2OUT loaded with 2.5mA each		±5			V
AutoShutdown Plus (FORCEON = GND, $\overline{\text{FORCEOFF}}$ = V_{CC})							
Receiver Input Threshold to $\overline{\text{INVALID}}$ Output High		Figure 4a	Positive threshold			2.7	V
			Negative threshold	-2.7			
Receiver Input Threshold to $\overline{\text{INVALID}}$ Output Low		Figure 4a		-0.3		0.3	V
$\overline{\text{INVALID}}$, READY (MAX3224–MAX3227) Output Voltage Low		I_{OUT} = -1.6mA				0.4	V
$\overline{\text{INVALID}}$, READY (MAX3224–MAX3227) Output Voltage High		I_{OUT} = -1.0mA		V_{CC} - 0.6			V
Receiver Positive or Negative Threshold to $\overline{\text{INVALID}}$ High	t_{INVH}	V_{CC} = 5V, Figure 4b			1		µs
Receiver Positive or Negative Threshold to $\overline{\text{INVALID}}$ Low	t_{INVL}	V_{CC} = 5V, Figure 4b			30		µs
Receiver or Transmitter Edge to Transmitters Enabled	t_{WU}	V_{CC} = 5V, Figure 5b (Note 2)			100		µs
Receiver or Transmitter Edge to Transmitters Shutdown	$t_{AUTOSHDN}$	V_{CC} = 5V, Figure 5b (Note 2)		15	30	60	s

TIMING CHARACTERISTICS—MAX3224/MAX3226/MAX3244

(V_{CC} = +3V to +5.5V, C1–C4 = 0.1µF, tested at 3.3V ±10%; C1 = 0.047µF, C2–C4 = 0.33µF, tested at 5.0V ±10%; T_A = T_{MIN} to T_{MAX}, unless otherwise noted. Typical values are at T_A = +25°C.)

PARAMETER	SYMBOL	CONDITIONS		MIN	TYP	MAX	UNITS
Maximum Data Rate		R_L = 3kΩ, C_L = 1000pF, one transmitter switching		250			kbps
Receiver Propagation Delay	t_{PHL}	R_IN to R_OUT, C_L = 150pF			0.15		µs
	t_{PLH}				0.15		
Receiver Output Enable Time		Normal operation (MAX3244 only)			200		ns
Receiver Output Disable Time		Normal operation (MAX3244 only)			200		ns
Transmitter Skew	$\lvert t_{PHL} - t_{PLH} \rvert$	(Note 3)			100		ns
Receiver Skew	$\lvert t_{PHL} - t_{PLH} \rvert$				50		ns
Transition-Region Slew Rate		V_{CC} = 3.3V, T_A = +25°C, R_L = 3kΩ to 7kΩ, measured from +3V to -3V or -3V to +3V	C_L = 150pF to 1000pF	6		30	V/µs
			C_L = 150pF to 2500pF	4		30	

TIMING CHARACTERISTICS—MAX3225/MAX3227/MAX3245

(V_{CC} = +3V to +5.5V, C1–C4 = 0.1µF, tested at 3.3V ±10%; C1 = 0.047µF, C2–C4 = 0.33µF, tested at 5.0V ±10%; T_A = T_{MIN} to T_{MAX}, unless otherwise noted. Typical values are at T_A = +25°C.)

PARAMETER	SYMBOL	CONDITIONS	MIN	TYP	MAX	UNITS
Maximum Data Rate		R_L = 3kΩ, C_L = 1000pF, one transmitter switching	250			kbps
		V_{CC} = 3.0V to 4.5V, R_L = 3kΩ, C_L = 250pF, one transmitter switching	1000			
		V_{CC} = 4.5V to 5.5V, R_L = 3kΩ, C_L = 1000pF, one transmitter switching	1000			
Receiver Propagation Delay	t_{PHL}	R_IN to R_OUT, C_L = 150pF		0.15		µs
	t_{PLH}			0.15		
Receiver Output Enable Time		Normal operation (MAX3245 only)		200		ns
Receiver Output Disable Time		Normal operation (MAX3245 only)		200		ns
Transmitter Skew	$\lvert t_{PHL} - t_{PLH} \rvert$	(Note 3)		25		ns
Receiver Skew	$\lvert t_{PHL} - t_{PLH} \rvert$			50		ns
Transition-Region Slew Rate		V_{CC} = 3.3V, T_A = +25°C, R_L = 3kΩ to 7kΩ, C_L = 150pF to 1000pF, measured from +3V to -3V or -3V to +3V	24		150	V/µs

Note 2: A transmitter/receiver edge is defined as a transition through the transmitter/receiver input logic thresholds.
Note 3: Transmitter skew is measured at the transmitter zero cross points.

Typical Operating Characteristics

(V_{CC} = +3.3V, 250kbps data rate, C1–C4 = 0.1µF, all transmitters loaded with 3kΩ and C_L, T_A = +25°C, unless otherwise noted.)

MAX3224/MAX3226 TRANSMITTER OUTPUT VOLTAGE vs. LOAD CAPACITANCE

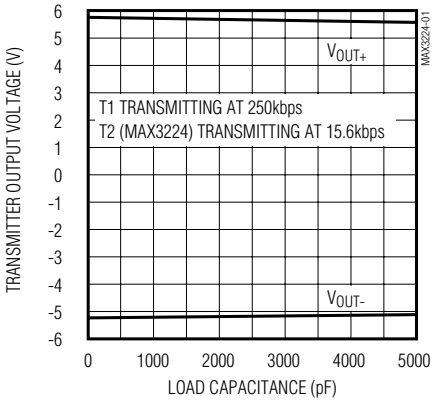

MAX3224/MAX3226 SLEW RATE vs. LOAD CAPACITANCE

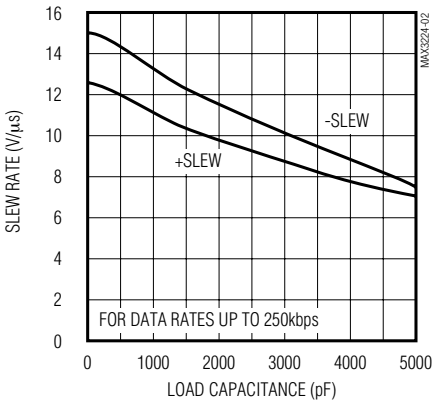

MAX3224/MAX3226 OPERATING SUPPLY CURRENT vs. LOAD CAPACITANCE

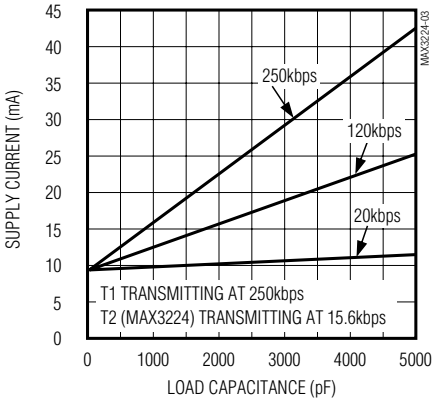

MAX3225/MAX3227 TRANSMITTER OUTPUT VOLTAGE vs. LOAD CAPACITANCE

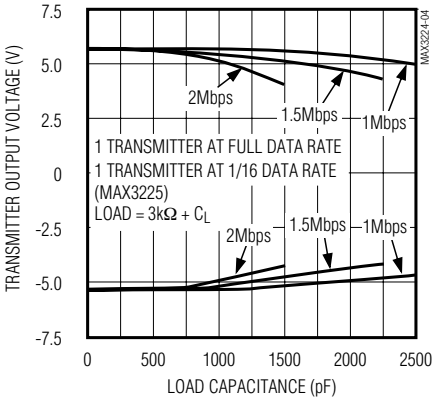

MAX3225/MAX3227 SLEW RATE vs. LOAD CAPACITANCE

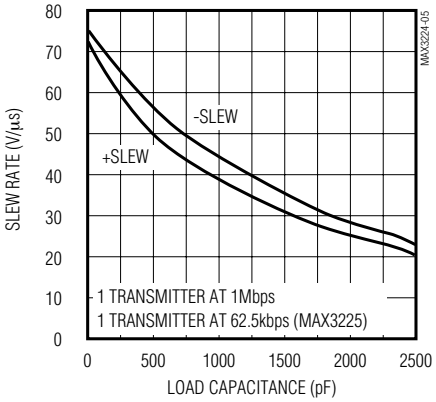

MAX3225/MAX3227 OPERATING SUPPLY CURRENT vs. LOAD CAPACITANCE

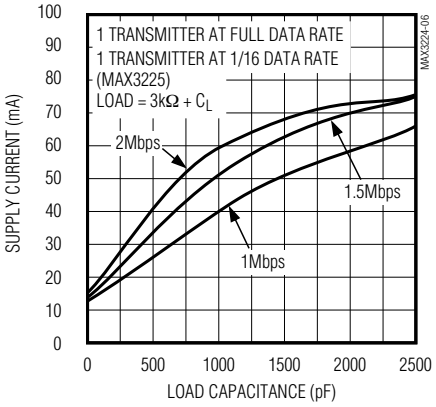

MAX3225/MAX3227 TRANSMITTER SKEW vs. LOAD CAPACITANCE

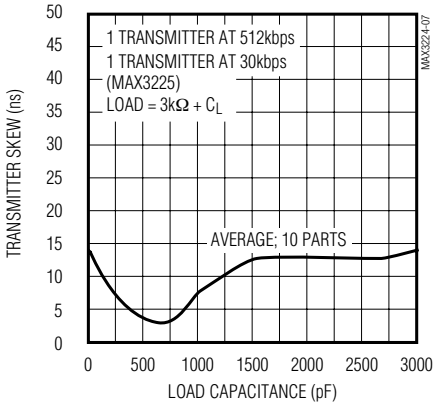

MAX3224–MAX3227 READY TURN-ON TIME vs. TEMPERATURE

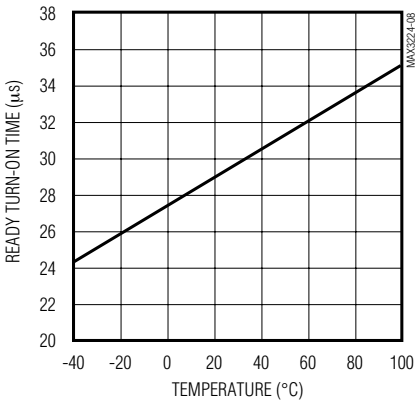

MAX3224–MAX3227 READY TURN-OFF TIME vs. TEMPERATURE

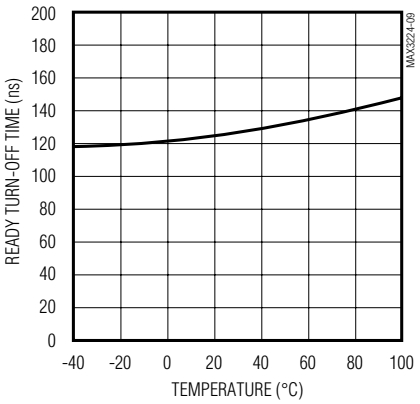

Typical Operating Characteristics (continued)

(V_{CC} = +3.3V, 250kbps data rate, C1–C4 = 0.1µF, all transmitters loaded with 3kΩ and C_L, T_A = +25°C, unless otherwise noted.)

MAX3244
TRANSMITTER OUTPUT VOLTAGE vs. LOAD CAPACITANCE

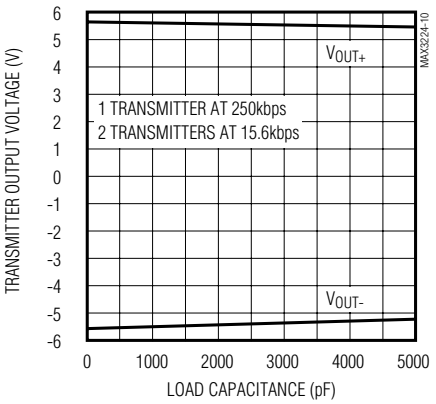

MAX3244
SLEW RATE vs. LOAD CAPACITANCE

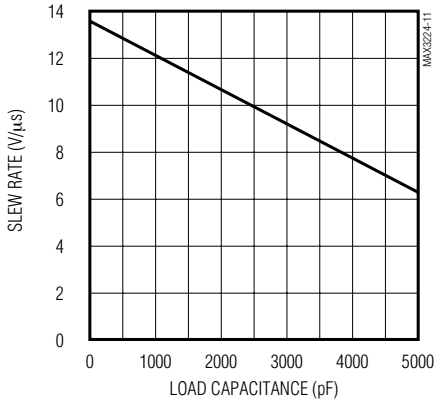

MAX3244
OPERATING SUPPLY CURRENT vs. LOAD CAPACITANCE

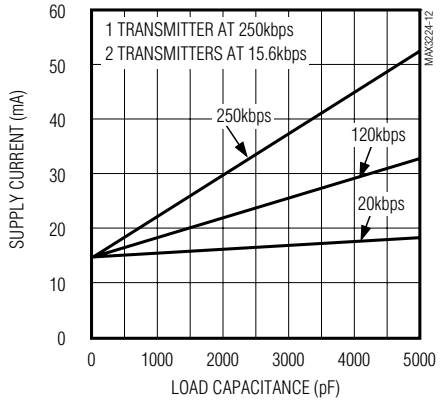

MAX3245
TRANSMITTER OUTPUT VOLTAGE vs. LOAD CAPACITANCE

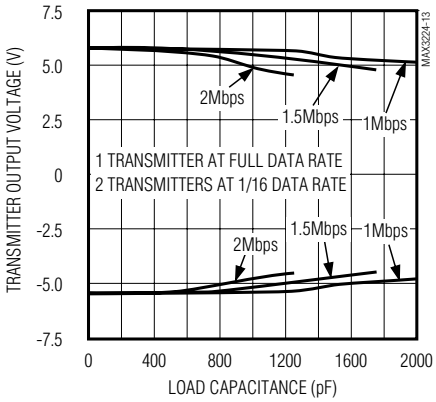

MAX3245
SLEW RATE vs. LOAD CAPACITANCE

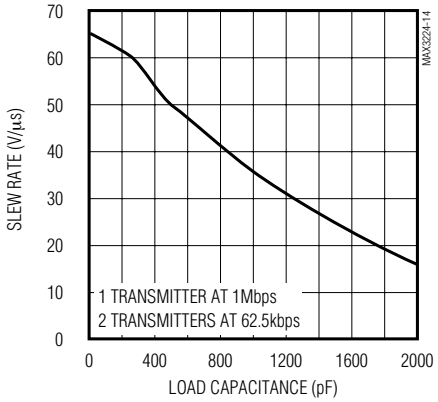

MAX3245
OPERATING SUPPLY CURRENT vs. LOAD CAPACITANCE

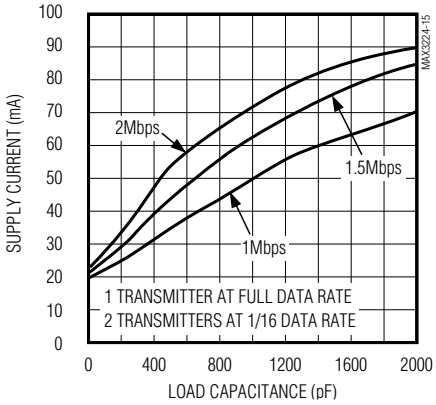

MAX3245
TRANSMITTER SKEW vs. LOAD CAPACITANCE

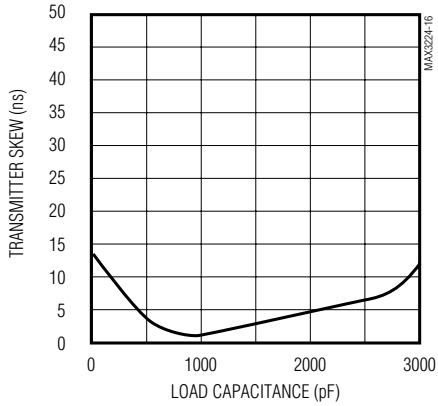

Pin Description

PIN				NAME	FUNCTION
MAX3224 MAX3225		MAX3226 MAX3227	MAX3244 MAX3245		
PDIP/ SSIP/ TSSOP	TQFN-EP				
1	19	1	—	READY	Ready to Transmit Output, Active High. READY is enabled high when V- goes below -4V and the device is ready to transmit.
2	1	2	28	C1+	Positive Terminal of Voltage-Doubler Charge-Pump Capacitor
3	20	3	27	V+	+5.5V Generated By the Charge Pump
4	2	4	24	C1-	Negative Terminal of Voltage-Doubler Charge-Pump Capacitor
5	3	5	1	C2+	Positive Terminal of Inverting Charge-Pump Capacitor
6	4	6	2	C2-	Negative Terminal of Inverting Charge-Pump Capacitor
7	5	7	3	V-	-5.5V Generated By the Charge Pump
8, 17	6, 15	13	9, 10, 11	T_OUT	RS-232 Transmitter Outputs
9, 16	7, 14	8	4–8	R_IN	RS-232 Receiver Inputs
10, 15	8, 13	9	15–19	R_OUT	TTL/CMOS Receiver Outputs
11	9	10	21	$\overline{\text{INVALID}}$	Valid Signal Detector Output, Active Low. A logic-high indicates that a valid RS-232 level is present on a receiver input.
12, 13	10, 11	11	12, 13, 14	T_IN	TTL/CMOS Transmitter Inputs
14	12	12	23	FORCEON	Force-On Input, Active High. Drive high to override AutoShutdown Plus, keeping transmitters and receivers on ($\overline{\text{FORCEOFF}}$ must be high) (Table 1).
18	16	14	25	GND	Ground
19	17	15	26	V_{CC}	+3.0V to +5.5V Single Supply Voltage
20	18	16	22	$\overline{\text{FORCEOFF}}$	Force-Off Input, Active Low. Drive low to shut down transmitters, receivers (except R2OUTB), and charge pump. This overrides AutoShutdown Plus and FORCEON (Table 1).
—	—	—	20	R2OUTB	TTL/CMOS Noninverting Complementary Receiver Outputs. Always active.
—	—	—	—	EP	Exposed Pad (TQFN only). Solder the exposed pad to the ground, or leave unconnected.

Detailed Description

Dual Charge-Pump Voltage Converter

The MAX3224–MAX3227/MAX3244/MAX3245's internal power supply consists of a regulated dual charge pump that provides output voltages of +5.5V (doubling charge pump) and -5.5V (inverting charge pump), over the +3.0V to +5.5V range. The charge pump operates in discontinuous mode: if the output voltages are less than 5.5V, the charge pump is enabled; if the output voltages exceed 5.5V, the charge-pump is disabled. Each charge pump requires a flying capacitor (C1, C2) and a reservoir capacitor (C3, C4) to generate the V+ and V- supplies.

The READY output (MAX3224–MAX3227) is low when the charge pumps are disabled in shutdown mode. The READY signal asserts high when V- goes below -4V.

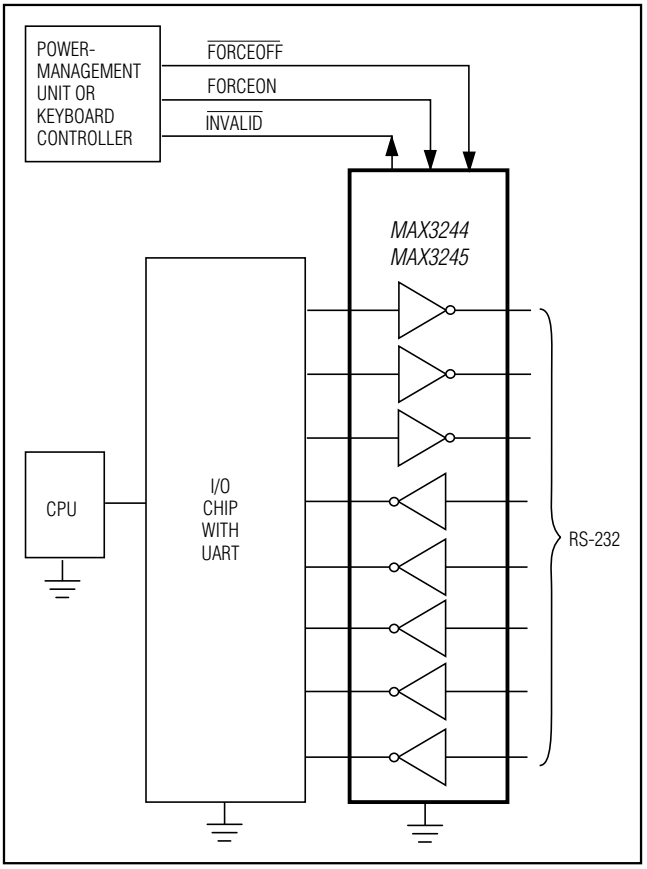

Figure 1. Interface Under Control of PMU

RS-232 Transmitters

The transmitters are inverting level translators that convert CMOS-logic levels to 5.0V EIA/TIA-232 levels. The MAX3224/MAX3226/MAX3244 guarantee a 250kbps data rate (1Mbps for the MAX3225/MAX3227/MAX3245) with worst-case loads of 3kΩ in parallel with 1000pF, providing compatibility with PC-to-PC communication software (such as LapLink®). Transmitters can be paralleled to drive multiple receivers. Figure 1 shows a complete system connection.

When $\overline{\text{FORCEOFF}}$ is driven to ground or when the AutoShutdown Plus circuitry senses that all receiver and transmitter inputs are inactive for more than 30sec, the transmitters are disabled and the outputs go into a high-impedance state. When powered off or shut down, the outputs can be driven to ±12V. The transmitter inputs do not have pull-up resistors. Connect unused inputs to GND or V_{CC}.

LapLink is a registered trademark of Laplink Software, Inc.

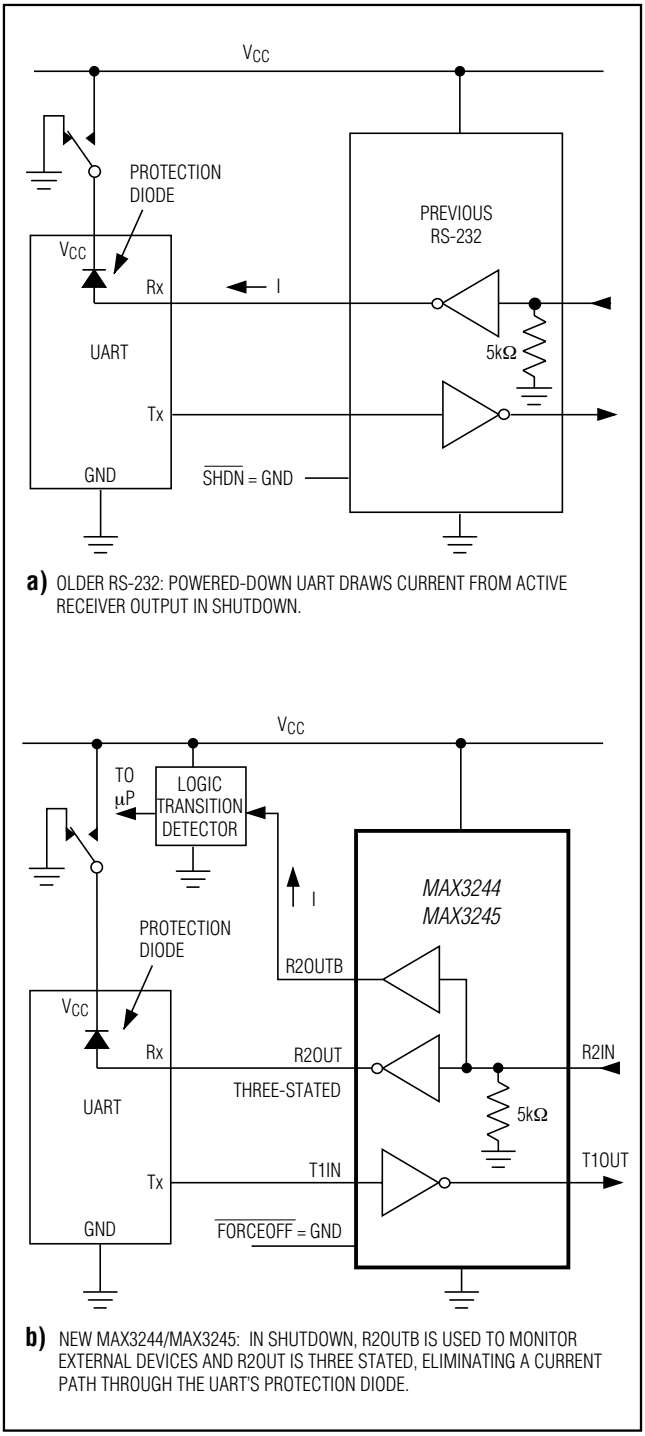

Figure 2. The MAX3244/MAX3245 detect RS-232 activity when the UART and interface are shut down.

Table 1. Output Control Truth Table

OPERATION STATUS	FORCEON	$\overline{\text{FORCEOFF}}$	VALID RECEIVER LEVEL	RECEIVER OR TRANSMITTER EDGE WITHIN 30sec	T_OUT	R_OUT (MAX3224/ MAX3225/ MAX3226/ MAX3227)	R_OUT (MAX3244/ MAX3245)	R2OUTB (MAX3244/ MAX3245)
Shutdown (Forced Off)	X	0	X	X	High-Z	Active	High-Z	Active
Normal Operation (Forced On)	1	1	X	X	Active	Active	Active	Active
Normal Operation (AutoShutdown Plus)	0	1	X	Yes	Active	Active	Active	Active
Shutdown (Auto-Shutdown Plus)	0	1	X	No	High-Z	Active	Active	Active
Normal Operation	$\overline{\text{INVALID}}$*	1	Yes	X	Active	Active	Active	Active
Normal Operation	$\overline{\text{INVALID}}$*	1	X	Yes	Active	Active	Active	Active
Shutdown	$\overline{\text{INVALID}}$*	1	No	No	High-Z	Active	Active	Active
Normal Operation (AutoShutdown)	$\overline{\text{INVALID}}$*	$\overline{\text{INVALID}}$**	Yes	X	Active	Active	Active	Active
Shutdown (AutoShutdown™)	$\overline{\text{INVALID}}$*	$\overline{\text{INVALID}}$**	No	X	High-Z	Active	High-Z	Active

X = Don't care
**$\overline{\text{INVALID}}$ connected to FORCEON*
***$\overline{\text{INVALID}}$ connected to FORCEON and $\overline{\text{FORCEOFF}}$*

RS-232 Receivers

The receivers convert RS-232 signals to CMOS-logic output levels. The MAX3224–MAX3227 feature inverting outputs that always remain active (Table 1). The MAX3244/MAX3245 have inverting three-state outputs that are high impedance when shut down ($\overline{\text{FORCEOFF}}$ = GND) (Table 1).

The MAX3244/MAX3245 feature an extra, always active, noninverting output, R2OUTB. R2OUTB output monitors receiver activity while the other receivers are high impedance, allowing Ring Indicator applications to be monitored without forward biasing other devices connected to the receiver outputs. This is ideal for systems where V_{CC} is set to ground in shutdown to accommodate peripherals such as UARTs (Figure 2).

The MAX3224–MAX3227/MAX3244/MAX3245 feature an $\overline{\text{INVALID}}$ output that is enabled low when no valid RS-232 voltage levels have been detected on all receiver inputs. Because $\overline{\text{INVALID}}$ indicates the receiver input's condition, it is independent of FORCEON and $\overline{\text{FORCEOFF}}$ states (Figures 3 and 4).

AutoShutdown Plus Mode

The MAX3224–MAX3227/MAX3244/MAX3245 achieve a 1µA supply current with Maxim's AutoShutdown Plus feature, which operates when $\overline{\text{FORCEOFF}}$ is high and a FORCEON is low. When these devices do not sense a valid signal transition on any receiver and transmitter input for 30sec, the on-board charge pumps are shut down, reducing supply current to 1µA. This occurs if the RS-232 cable is disconnected or if the connected

AutoShutdown is a trademark of Maxim Integrated Products, Inc.

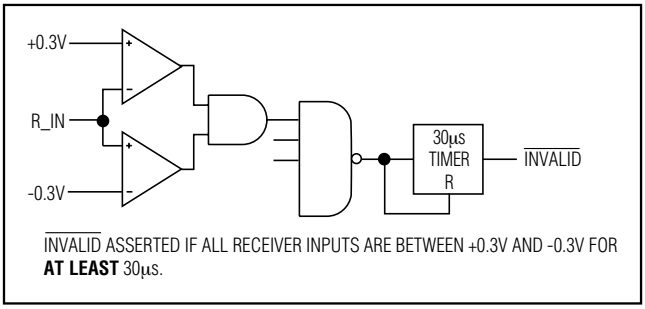

Figure 3a. INVALID Functional Diagram, INVALID Low

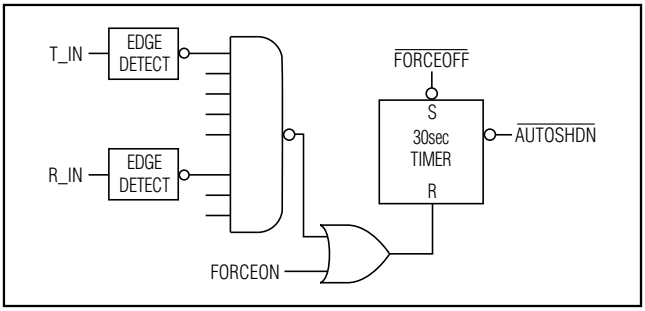

Figure 3c. AutoShutdown Plus Logic

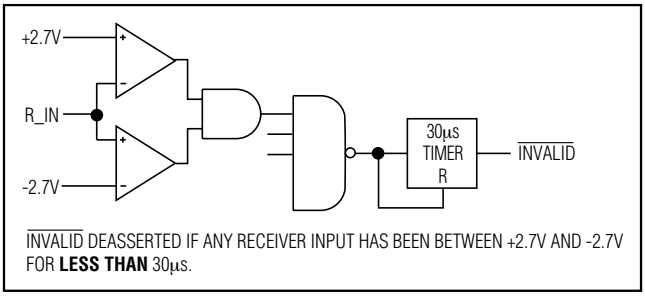

Figure 3b. INVALID Functional Diagram, INVALID High

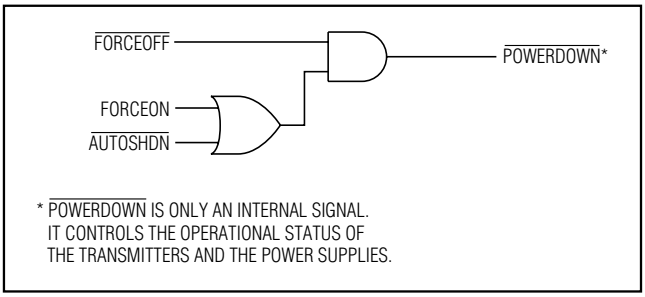

Figure 3d. Power-Down Logic

Table 2. INVALID Truth Table

RS-232 SIGNAL PRESENT AT ANY RECEIVER INPUT	INVALID OUTPUT
Yes	High
No	Low

peripheral transmitters are turned off, and the UART driving the transmitter inputs is inactive. The system turns on again when a valid transition is applied to any RS-232 receiver or transmitter input. As a result, the system saves power without changes to the existing BIOS or operating system.

Figures 3a and 3b depict valid and invalid RS-232 receiver voltage levels. INVALID indicates the receiver input's condition, and is independent of FORCEON and FORCEOFF states. Figure 3 and Tables 1 and 2 summarize the operating modes of the MAX3224–MAX3227/MAX3244/MAX3245 devices. FORCEON and FORCEOFF override AutoShutdown Plus circuitry. When neither control is asserted, the IC selects

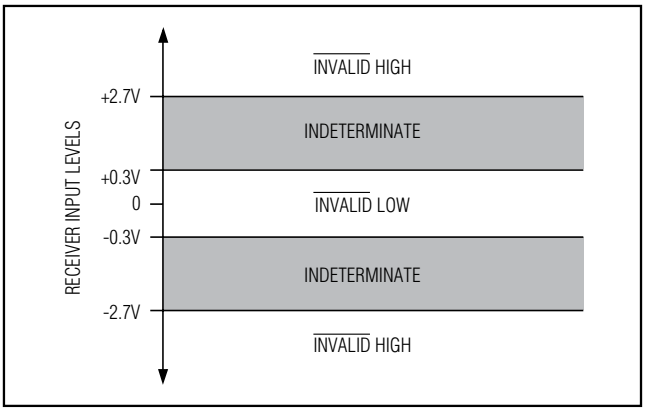

Figure 4a. Receiver Positive/Negative Thresholds for INVALID

between these states automatically based on the last receiver or transmitter input edge received.

When shut down, the device's charge pumps turn off, V+ is pulled to V_{CC}, V- is pulled to ground, the transmitter outputs are high impedance, and READY (MAX3224–MAX3227) is driven low. The time required to exit shutdown is typically 100µs (Figure 6).

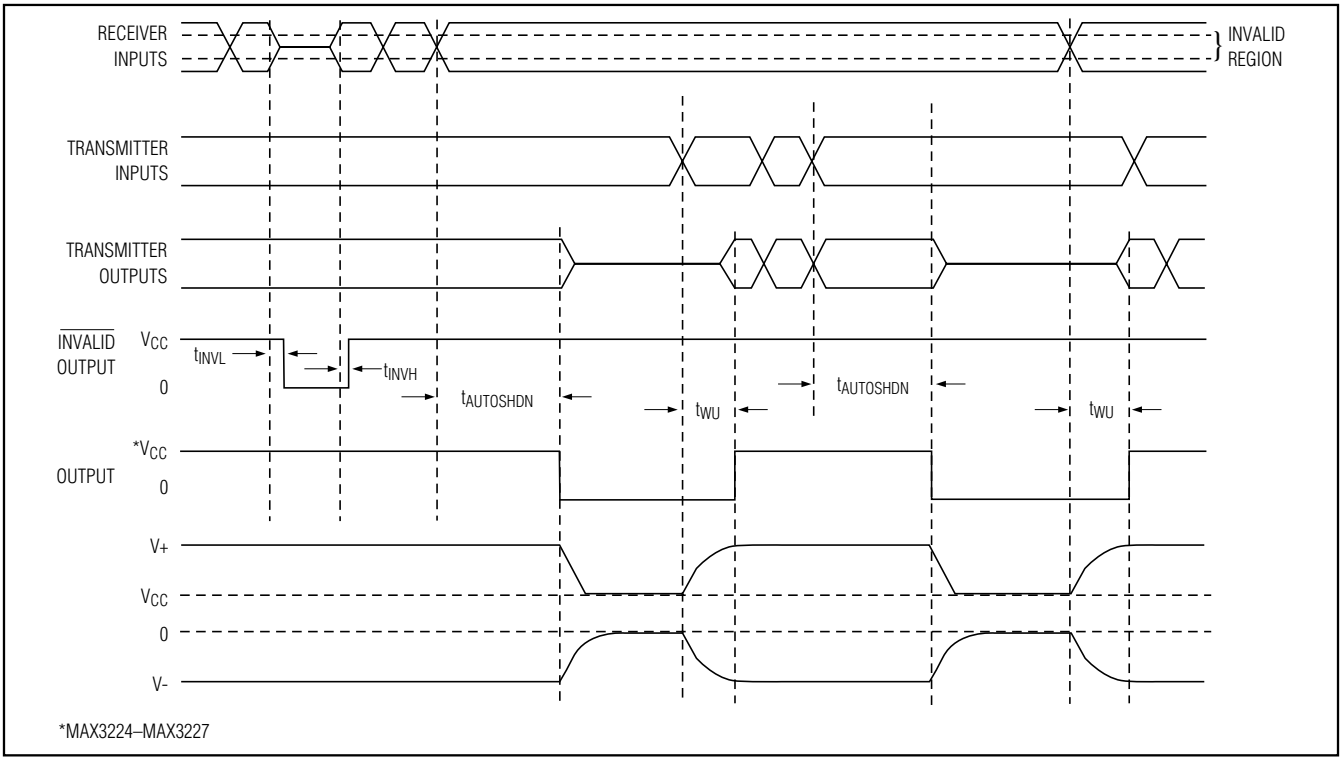

Figure 4b. AutoShutdown Plus, $\overline{\text{INVALID}}$, and READY Timing Diagram

By connecting FORCEON to $\overline{\text{INVALID}}$, the MAX3224–MAX3227/MAX3244/MAX3245 shut down when no valid receiver level and no receiver or transmitter edge is detected for 30sec, and wake up when a valid receiver level or receiver or transmitter edge is detected.

By connecting FORCEON and $\overline{\text{FORCEOFF}}$ to $\overline{\text{INVALID}}$, the MAX3224–MAX3227/MAX3244/MAX3245 shutdown when no valid receiver level is detected and wake up when a valid receiver level is detected (same functionality as AutoShutdown feature on MAX3221/MAX3223/MAX3243).

A mouse or other system with AutoShutdown Plus may need time to wake up. Figure 5 shows a circuit that forces the transmitters on for 100ms, allowing enough time for the other system to realize that the MAX3244/MAX3245 is awake. If the other system outputs valid RS-232 signal transitions within that time, the RS-232 ports on both systems remain enabled.

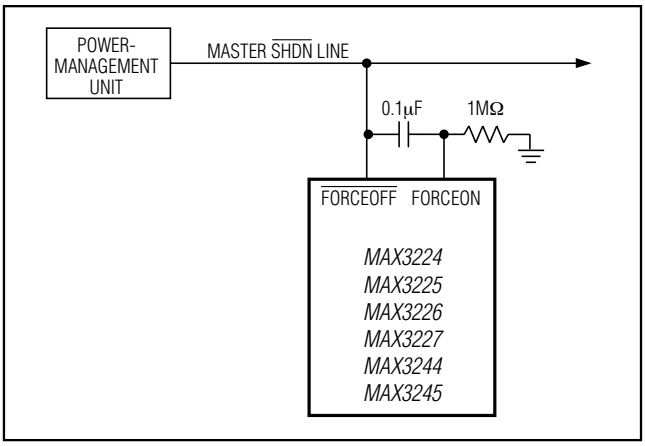

Figure 5. AutoShutdown Plus Initial Turn-On to Wake Up a Mouse or Another System

Software-Controlled Shutdown

If direct software control is desired, use $\overline{\text{INVALID}}$ to indicate DTR or Ring Indicator signal. Tie $\overline{\text{FORCEOFF}}$ and FORCEON together to bypass the AutoShutdown Plus so the line acts like a $\overline{\text{SHDN}}$ input.

Applications Information

Capacitor Selection

The capacitor type used for C1–C4 is not critical for proper operation; polarized or nonpolarized capacitors can be used. The charge pump requires 0.1µF capacitors for 3.3V operation. For other supply voltages, see Table 3 for required capacitor values. Do not use values smaller than those listed in Table 3. Increasing the capacitor values (e.g., by a factor of 2) reduces ripple on the transmitter outputs and slightly reduces power consumption. C2, C3, and C4 can be increased without changing C1's value. **However, do not increase C1 without also increasing the values of C2, C3, C4, and C_{BYPASS}, to maintain the proper ratios (C1 to the other capacitors).**

When using the minimum required capacitor values, make sure the capacitor value does not degrade excessively with temperature. If in doubt, use capacitors with a larger nominal value. The capacitor's equivalent series resistance (ESR), which usually rises at low temperatures, influences the amount of ripple on V+ and V-.

Power-Supply Decoupling

In most circumstances, a 0.1µF V_{CC} bypass capacitor is adequate. In applications that are sensitive to power-supply noise, use a capacitor of the same value as charge-pump capacitor C1. Connect bypass capacitors as close to the IC as possible.

Transmitter Outputs when Exiting Shutdown

Figure 6 shows two transmitter outputs when exiting shutdown mode. As they become active, the two transmitter outputs are shown going to opposite RS-232 levels (one transmitter input is high; the other is low). Each transmitter is loaded with 3kΩ in parallel with 1000pF. The transmitter outputs display no ringing or undesirable transients as they come out of shutdown. Note that the transmitters are enabled only when the magnitude of V- exceeds approximately -3V.

Table 3. Required Minimum Capacitance Values

V_{CC} (V)	C1, C_{BYPASS} (µF)	C2, C3, C4 (µF)
3.0 to 3.6	0.1	0.1
4.5 to 5.5	0.047	0.33
3.0 to 5.5	0.22	1

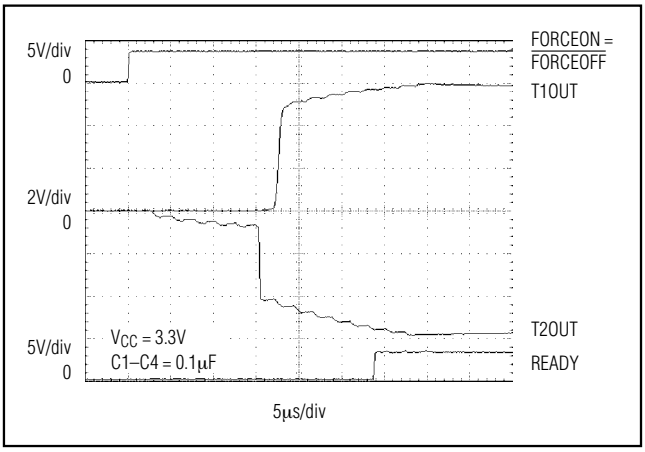

Figure 6. Transmitter Outputs when Exiting Shutdown or Powering Up

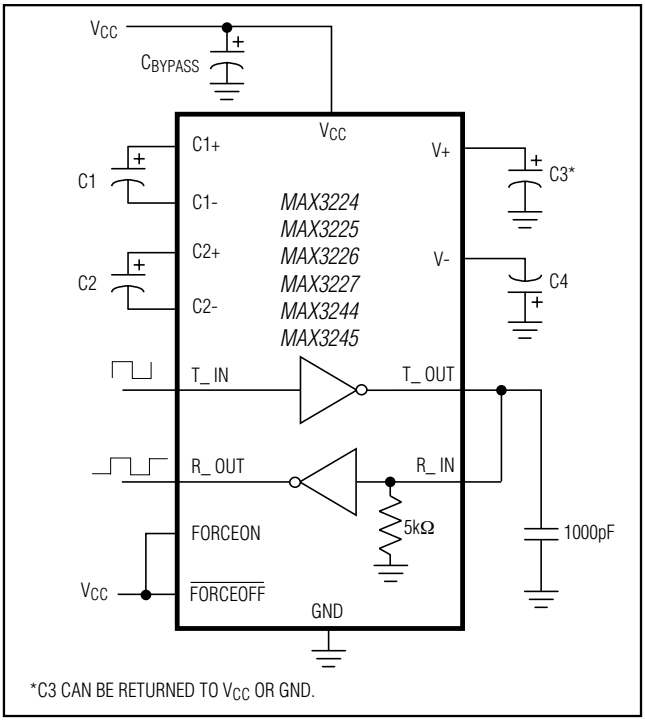

Figure 7. Loopback Test Circuit

High Data Rates

The MAX3224/MAX3226/MAX3244 maintain the RS-232 ±5.0V minimum transmitter output voltage even at high data rates. Figure 7 shows a transmitter loopback test circuit. Figure 8 shows a loopback test result at 120kbps, and Figure 9 shows the same test at 250kbps. For Figure 8, all transmitters were driven simultaneously at 120kbps into RS-232 loads in parallel with 1000pF. For Figure 9, a single transmitter was driven at 250kbps, and all transmitters were loaded with an RS-232 receiver in parallel with 250pF.

The MAX3225/MAX3227/MAX3245 maintain the RS-232 ±5.0V minimum transmitter output voltage at data rates up to 1Mbps (MegaBaud). Figure 10 shows a loopback test result with a single transmitter driven at 1Mbps and all transmitters loaded with an RS-232 receiver in parallel with 250pF.

Mouse Driveability

The MAX3244/MAX3245 are specifically designed to power serial mice while operating from low-voltage power supplies. They have been tested with leading mouse brands from manufacturers such as Microsoft and Logitech. The MAX3244/MAX3245 successfully

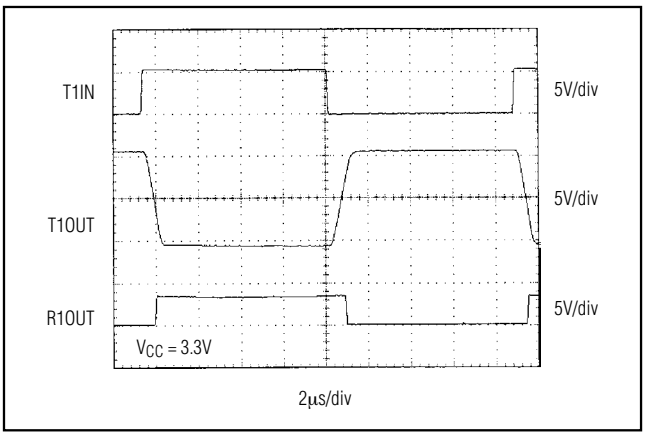

Figure 8. MAX3224/MAX3226/MAX3244 Loopback Test Result at 120kbps

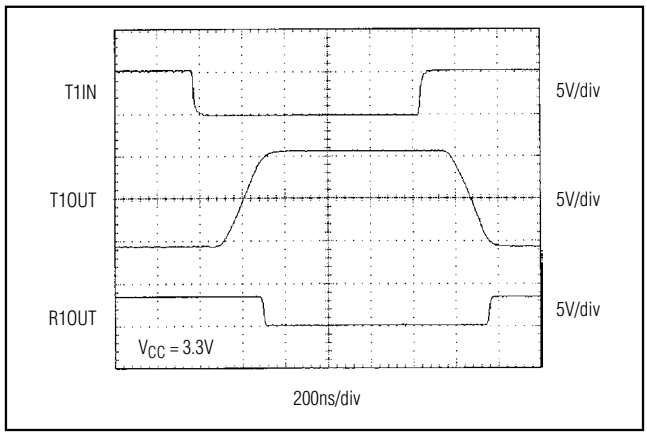

Figure 10. MAX3225/MAX3227/MAX3245 Loopback Test Result at 1Mbps

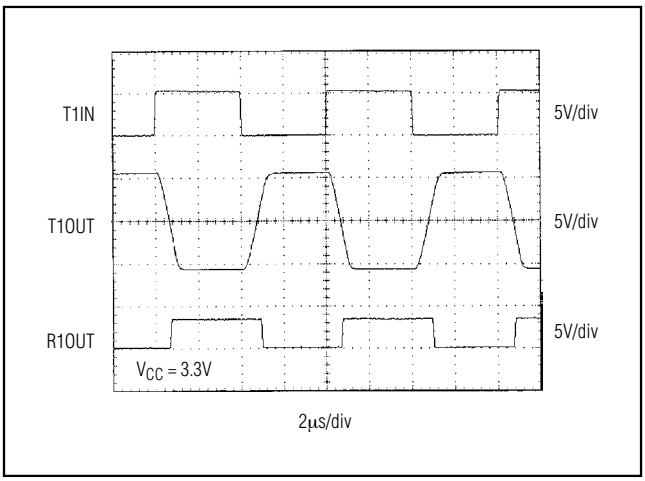

Figure 9. MAX3224/MAX3226/MAX3244 Loopback Test Result at 250kbps

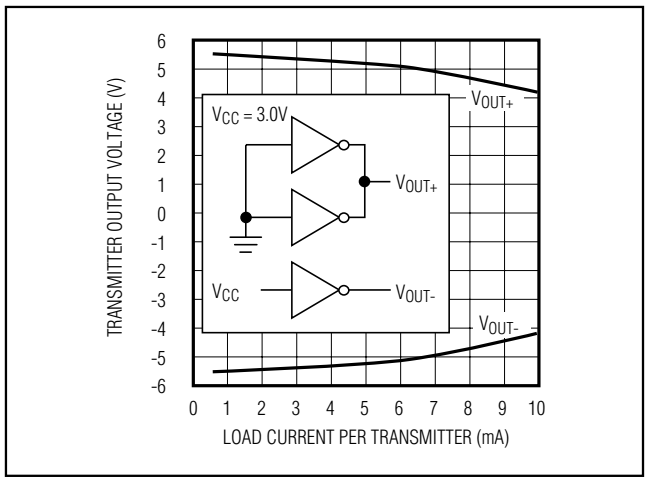

Figure 11a. MAX324_ Transmitter Output Voltage vs. Load Current per Transmitter

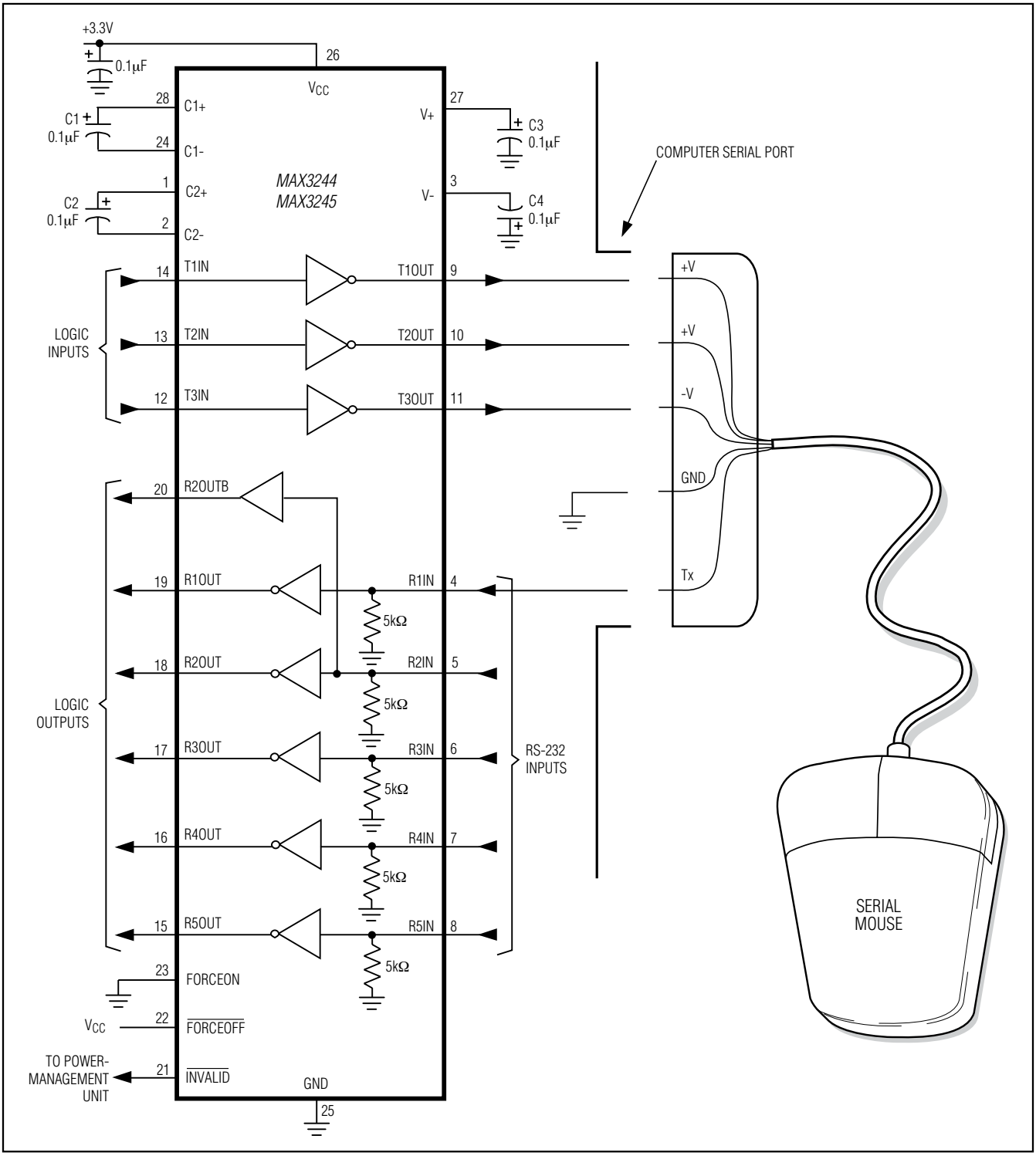

Figure 11b. Mouse Driver Test Circuit

drove all serial mice tested and met their respective current and voltage requirements. The MAX3244/MAX3245 dual charge pump ensures the transmitters will supply at least ±5V during worst-case conditions. Figure 11a shows the transmitter output voltages under increasing load current. Figure 11b shows a typical mouse connection.

Interconnection with 3V and 5V Logic

The MAX3224–MAX3227/MAX3244/MAX3245 can directly interface with various 5V logic families, including ACT and HCT CMOS. See Table 4 for more information on possible combinations of interconnections.

Table 5 lists other Maxim 3.0V to 5.5V powered transceivers.

Table 4. Logic Family Compatibility with Various Supply Voltages

SYSTEM POWER-SUPPLY VOLTAGE (V)	V_{CC} SUPPLY VOLTAGE (V)	COMPATIBILITY
3.3	3.3	Compatible with all CMOS families
5	5	Compatible with all TTL and CMOS families
5	3.3	Compatible with ACT and HCT CMOS, and with AC, HC, or CD4000 CMOS

Table 5. 3.0V to 5.5V Powered RS-232 Transceivers from Maxim

PART	SUPPLY VOLTAGE RANGE (V)	NO. OF Tx/Rx	SUPPLY CURRENT (µA)	Auto-Shutdown Plus	Auto-Shutdown	GUARANTEED DATA RATE (bps)
MAX3241	+3.0 to +5.5	3/5	300	—	—	120k
MAX3243	+3.0 to +5.5	3/5	1	—	Yes	120k
MAX3244	+3.0 to +5.5	3/5	1	Yes	—	250k
MAX3245	+3.0 to +5.5	3/5	1	Yes	—	1M
MAX3232	+3.0 to +5.5	2/2	300	—	—	120k
MAX3222	+3.0 to +5.5	2/2	300	—	—	120k
MAX3223	+3.0 to +5.5	2/2	1	—	Yes	120k
MAX3224	+3.0 to +5.5	2/2	1	Yes	—	250k
MAX3225	+3.0 to +5.5	2/2	1	Yes	—	1M
MAX3221	+3.0 to +5.5	1/1	1	—	Yes	120k
MAX3226	+3.0 to +5.5	1/1	1	Yes	—	250k
MAX3227	+3.0 to +5.5	1/1	1	Yes	—	1M

Typical Operating Circuits

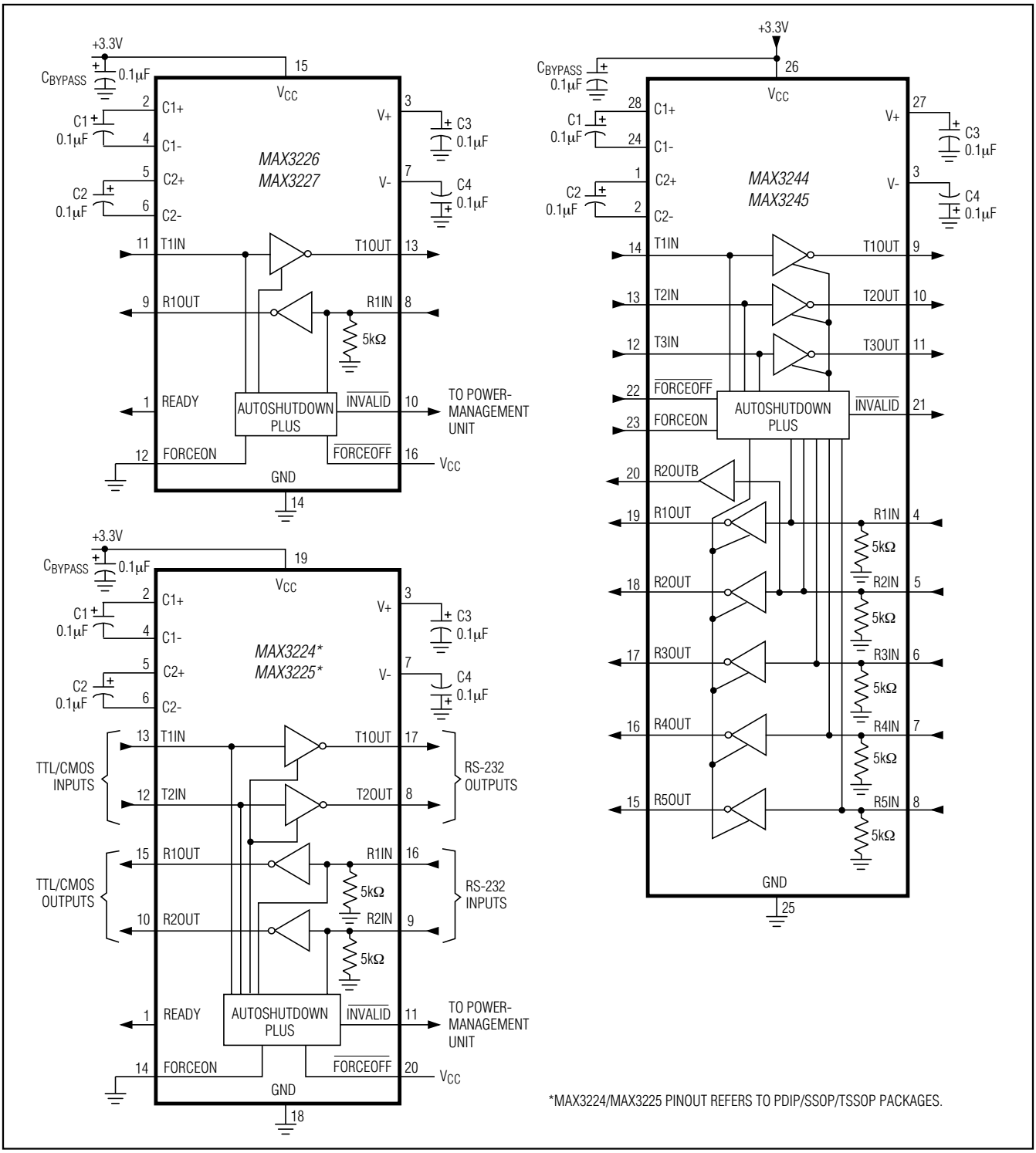

*MAX3224/MAX3225 PINOUT REFERS TO PDIP/SSOP/TSSOP PACKAGES.

Pin Configurations

TOP VIEW

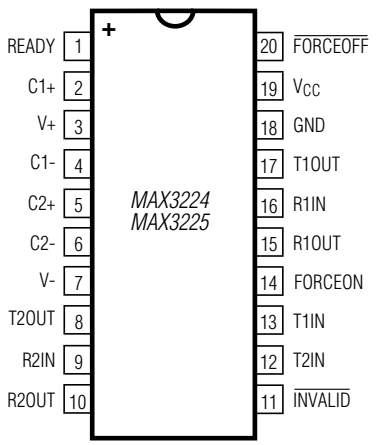

DIP/SSOP/TSSOP

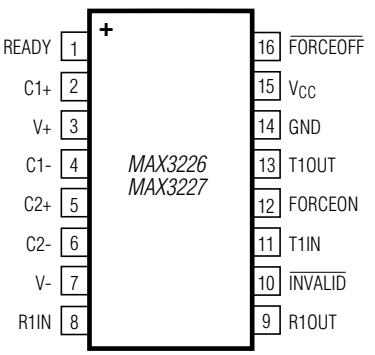

SSOP

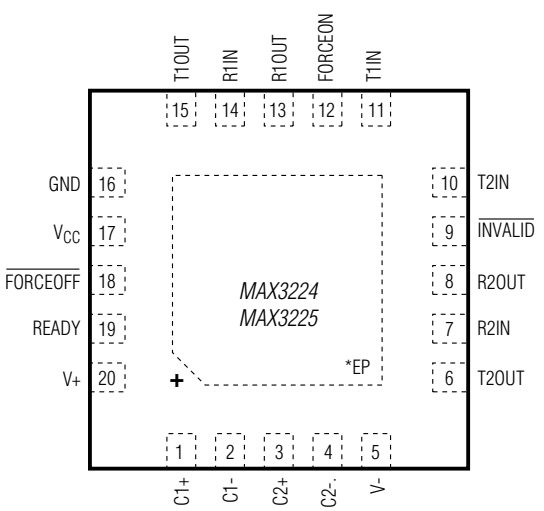

TQFN

*CONNECT EP TO GND.

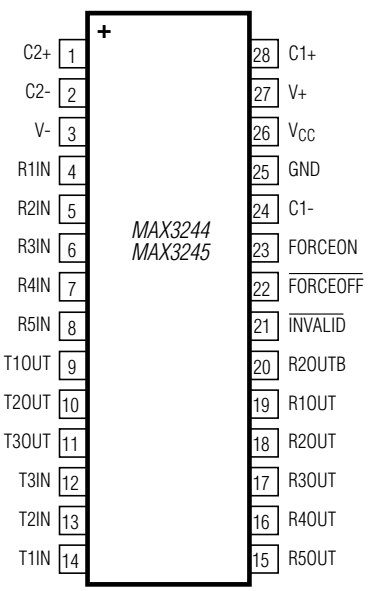

SO/SSOP

Ordering Information (continued)

PART	TEMP RANGE	PIN-PACKAGE
MAX3225CPP+	0°C to +70°C	20 PDIP
MAX3225CAP+	0°C to +70°C	20 SSOP
MAX3225CTP+	0°C to +70°C	20 TQFN-EP*
MAX3225CUP+	0°C to +70°C	20 TSSOP
MAX3225EPP+	-40°C to +85°C	20 PDIP
MAX3225EAP+	-40°C to +85°C	20 SSOP
MAX3225ETP+	-40°C to +85°C	20 TQFN-EP*
MAX3225EUP+	-40°C to +85°C	20 TSSOP
MAX3225EUP/V+	-40°C to +85°C	20 TSSOP
MAX3226CAE+	0°C to +70°C	16 SSOP
MAX3226EAE+	-40°C to +85°C	16 SSOP
MAX3227CAE+	0°C to +70°C	16 SSOP
MAX3227EAE+	-40°C to +85°C	16 SSOP
MAX3244CWI+	0°C to +70°C	28 SO (W)
MAX3244CAI+	0°C to +70°C	28 SSOP
MAX3244EWI+	-40°C to +85°C	28 SO (W)
MAX3244EAI+	-40°C to +85°C	28 SSOP
MAX3245CWI+	0°C to +70°C	28 SO (W)
MAX3245CAI+	0°C to +70°C	28 SSOP
MAX3245EWI+	-40°C to +85°C	28 SO (W)
MAX3245EAI+	-40°C to +85°C	28 SSOP

+Denotes a lead(Pb)-free/RoHS-compliant package.
**EP = Exposed pad.*
/V denotes an automotive qualified part.

Chip Information

PROCESS: BiCMOS

Package Information

For the latest package outline information and land patterns (footprints), go to **www.maxim-ic.com/packages**. Note that a "+", "#", or "-" in the package code indicates RoHS status only. Package drawings may show a different suffix character, but the drawing pertains to the package regardless of RoHS status.

PACKAGE TYPE	PACKAGE CODE	OUTLINE NO.	LAND PATTERN NO.
16 SSOP	A16+2	21-0056	90-0106
20 SSOP	A20+2	21-0056	90-0094
20 TQFN-EP	T2055+5	21-0140	90-0010
20 TSSOP	U20+2	21-0066	90-0116
20 PDIP	P20+3	21-0043	—
28 SO (W)	W28+6	21-0042	90-0109
28 SSOP	A28+1	21-0056	90-0095

Revision History

REVISION NUMBER	REVISION DATE	DESCRIPTION	PAGES CHANGED
3	5/05	Added new packaging types	—
4	10/08	Added automotive qualified product information	1, 18
5	2/11	Changed all the parts in the *Ordering Information* to lead-free	1, 18

Maxim cannot assume responsibility for use of any circuitry other than circuitry entirely embodied in a Maxim product. No circuit patent licenses are implied. Maxim reserves the right to change the circuitry and specifications without notice at any time. The parametric values (min and max limits) shown in the Electrical Characteristics table are guaranteed. Other parametric values quoted in this data sheet are provided for guidance.

© 2011 Maxim Integrated The Maxim logo and Maxim Integrated are trademarks of Maxim Integrated Products, Inc.