Click here to ask about the production status of specific part numbers.

MAX4080/MAX4081

76V, High-Side, Current-Sense Amplifiers with Voltage Output

General Description

The MAX4080/MAX4081 are high-side, current-sense amplifiers with an input voltage range that extends from 4.5V to 76V making them ideal for telecom, automotive, backplane, and other systems where high-voltage current monitoring is critical. The MAX4080 is designed for unidirectional current-sense applications and the MAX4081 allows bidirectional current sensing. The MAX4081 single output pin continuously monitors the transition from charge to discharge and avoids the need for a separate polarity output. The MAX4081 requires an external reference to set the zero-current output level (V_{SENSE} = 0V). The charging current is represented by an output voltage from V_{REF} to V_{CC}, while discharge current is given from V_{REF} to GND.

For maximum versatility, the 76V input voltage range applies independently to both supply voltage (V_{CC}) and common-mode input voltage (V_{RS+}). High-side current monitoring does not interfere with the ground path of the load being measured, making the MAX4080/MAX4081 particularly useful in a wide range of high-voltage systems.

The combination of three gain versions (5V/V, 20V/V, 60V/V = F, T, S suffix) and a user-selectable, external sense resistor sets the full-scale current reading and its proportional output voltage. The MAX4080/MAX4081 offer a high level of integration, resulting in a simple, accurate, and compact current-sense solution.

The MAX4080/MAX4081 operate from a 4.5V to 76V single supply and draw only 75µA of supply current. These devices are specified over the automotive operating temperature range (-40°C to +125°C) and are available in a space-saving 8-pin µMAX® or SO package.

Applications

- Automotive (12V, 24V, or 42V Batteries)
- 48V Telecom and Backplane Current Measurement
- Bidirectional Motor Control
- Power-Management Systems
- Avalanche Photodiode and PIN-Diode Current Monitoring
- General System/Board-Level Current Sensing
- Precision High-Voltage Current Sources

µMAX is a registered trademark of Maxim Integrated Products, Inc.

Benefits and Features

- Ideal for High-Voltage Current Monitoring Applications
  - Wide 4.5V to 76V Input Common-Mode Range
  - Independent Operating Supply Voltage
- High Accuracy and Low Quiescent Current Support Precision Application Requirements
  - ±0.1% Full-Scale Accuracy
  - Low 100µV Input Offset Voltage
  - Three Gain Versions Available
    - 5V/V (MAX4080F/MAX4081F)
    - 20V/V (MAX4080T/MAX4081T)
    - 60V/V (MAX4080S/MAX4081S)
  - 75µA Supply Current (MAX4080)
- Flexible Current Sensing Supports Monitoring of Charge and Discharge of Batteries
  - Bidirectional (MAX4081) or Unidirectional (MAX4080) I_{SENSE}
  - Reference Input for Bidirectional OUT (MAX4081)
- Minimizes Required Board Space
  - 8-Pin µMAX Package

Ordering Information

PART	TEMP RANGE	PIN-PACKAGE
MAX4080FAUA+	-40°C to +125°C	8 µMAX
MAX4080FAUA/V+	-40°C to +125°C	8 µMAX
MAX4080FASA+	-40°C to +125°C	8 SO
MAX4080TAUA+	-40°C to +125°C	8 µMAX
MAX4080TAUA/V+	-40°C to +125°C	8 µMAX

+Denotes a lead(Pb)-free/RoHS-compliant package.
/V denotes an automotive qualified part.

Ordering Information continued at end of data sheet.

Selector Guide appears at end of data sheet.

Pin Configurations

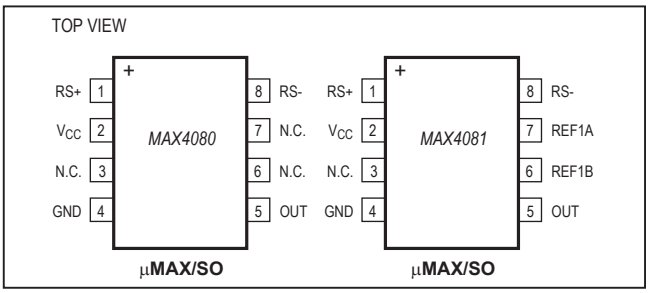

Absolute Maximum Ratings

V_{CC} to GND .....-0.3V to +80V
RS+, RS- to GND .....-0.3V to +80V
OUT to GND..... -0.3V to the lesser of +18V or (V_{CC} + 0.3V)
REF1A, REF1B to GND
(MAX4081 Only) -0.3V to the lesser of +18V or (V_{CC} + 0.3V)
Output Short Circuit to GND.....Continuous
Differential Input Voltage (V_{RS+} - V_{RS-}).....±80V
Current into Any Pin .....±20mA

Continuous Power Dissipation (T_A = +70°C)
8-Pin ?MAX (derate 4.5mW/°C above +70°C).....362mW
8-Pin SO (derate 5.88mW/°C above +70°C).....471mW
Operating Temperature Range..... -40°C to +125°C
Junction Temperature.....+150°C
Storage Temperature Range..... -65°C to +150°C
Lead Temperature (soldering, 10s) .....+300°C
Soldering Temperature (reflow).....+260°C

Stresses beyond those listed under "Absolute Maximum Ratings" may cause permanent damage to the device. These are stress ratings only, and functional operation of the device at these or any other conditions beyond those indicated in the operational sections of the specifications is not implied. Exposure to absolute maximum rating conditions for extended periods may affect device reliability.

DC Electrical Characteristics

(V_{CC} = V_{RS+} = 4.5V to 76V, V_{REF1A} = V_{REF1B} = 5V (MAX4081 only), V_{SENSE} = (V_{RS+} - V_{RS-}) = 0V, R_{LOAD} = 100kΩ, T_A = T_{MIN} to T_{MAX}, unless otherwise noted. Typical values are at T_A = +25°C.) (Notes 1, 2)

PARAMETER	SYMBOL	CONDITIONS		MIN	TYP	MAX	UNITS
Operating Voltage Range	VCC	Inferred from PSRR test		4.5		76	V
Common-Mode Range	CMVR	Inferred from CMRR test (Note 3)		4.5		76	V
Supply Current	ICC	VCC = VRS+ = 76V, no load	MAX4080		75	190	µA
			MAX4081		103	190	
Leakage Current	IRS+, IRS-	VCC = 0V, VRS+ = 76V			0.01	2	µA
Input Bias Current	IRS+, IRS-	VCC = VRS+ = 76V			5	12	µA
Full-Scale Sense Voltage (Note 4)	VSENSE	MAX4080F/MAX4081F			±1000		mV
		MAX4080T/MAX4081T			±250		
		MAX4080S/MAX4081S			±100		
Gain	AV	MAX4080F/MAX4081F			5		V/V
		MAX4080T/MAX4081T			20		
		MAX4080S/MAX4081S			60		
Gain Accuracy	ΔAV	VCC = VRS+ = 48V (Note 5)	TA = +25°C		±0.1	±0.6	%
			TA = -40°C to +85°C			±1	
			TA = TMIN to TMAX			±1.2	
Input Offset Voltage	VOS	VCC = VRS+ = 48V (Note 6)	TA = +25°C		±0.1	±0.6	mV
			TA = -40°C to +85°C			±1	
			TA = TMIN to TMAX			±1.2	
Common-Mode Rejection Ratio (Note 7)	CMRR	VCC = 48V, VRS+ = 4.5V to 76V		100	124		dB
Power-Supply Rejection Ratio (Note 7)	PSRR	VRS+ = 48V, VCC = 4.5V to 76V		100	122		dB
OUT High Voltage	(VCC – VOH)	VCC = 4.5V, VRS+ = 48V, VREF1A = VREF1B = 2.5V, IOUT (sourcing) = +500µA (Note 8)	MAX4080F/MAX4081F, VSENSE = 1000mV		0.15	0.27	V
			MAX4080T/MAX4081T, VSENSE = 250mV				
			MAX4080S/MAX4081S, VSENSE = 100mV				

DC Electrical Characteristics (continued)

(V_{CC} = V_{RS+} = 4.5V to 76V, V_{REF1A} = V_{REF1B} = 5V (MAX4081 only), V_{SENSE} = (V_{RS+} - V_{RS-}) = 0V, R_{LOAD} = 100kΩ, T_A = T_{MIN} to T_{MAX}, unless otherwise noted. Typical values are at T_A = +25°C.) (Notes 1, 2)

PARAMETER	SYMBOL	CONDITIONS		MIN	TYP	MAX	UNITS
OUT Low Voltage	V_{OL}	V_{CC} = V_{RS+} = 48V, V_{REF1A} = V_{REF1B} = 2.5V, V_{SENSE} = -1000mV (for MAX4081 only)	I_{OUT} (sinking) = 10µA		4	15	
			I_{OUT} (sinking) = 100µA		23	55	
REF1A = REF1B Input Voltage Range (MAX4081 Only)	(V_{REF} – V_{GND})	Inferred from REF1A rejection ratio, V_{REF1A} = V_{REF1B}		1.5		6	V
REF1A Input Voltage Range (MAX4081 Only)	(V_{REF1A} – V_{GND})	Inferred from REF1A rejection ratio, V_{REF1B} = V_{GND}		3		12	V
REF1A Rejection Ratio (MAX4081 Only)		V_{CC} = V_{RS+} = 48V, V_{SENSE} = 0V, V_{REF1A} = V_{REF1B} = 1.5V to 6V		80	108		dB
REF/REF1A Ratio (MAX4081 Only)		V_{REF1A} = 10V, V_{REF1B} = V_{GND}, V_{CC} = V_{RS+} = 48V (Note 2)		0.497	0.500	0.503	
REF1A Input Impedance (MAX4081 Only)		V_{REF1B} = V_{GND}			250		kΩ

AC Electrical Characteristics

(V_{CC} = V_{RS+} = 4.5V to 76V, V_{REF1A} = V_{REF1B} = 5V (MAX4081 only), V_{SENSE} = (V_{RS+} - V_{RS-}) = 0V, R_{LOAD} = 100kΩ, C_{LOAD} = 20pF, T_A = T_{MIN} to T_{MAX}, unless otherwise noted. Typical values are at T_A = +25°C.) (Notes 1, 2)

PARAMETER	SYMBOL	CONDITION		MIN	TYP	MAX	UNITS
Bandwidth	BW	V_{CC} = V_{RS+} = 48V, V_{OUT} = 2.5V	MAX4080F/T/S		250		kHz
			MAX4081F/T/S		150		
OUT Settling Time to 1% of Final Value		V_{SENSE} = 10mV to 100mV			20		µs
		V_{SENSE} = 100mV to 10mV			20		
Capacitive-Load Stability		No sustained oscillations			500		pF
Output Resistance	R_{OUT}	V_{SENSE} = 100mV			0.1		Ω
Power-Up Time		V_{CC} = V_{RS+} = 48V, V_{SENSE} = 100mV (Note 9)			50		µs
Saturation Recovery Time		(Notes 9,10)			50		µs

Note 1: All devices are 100% production tested at T_A = +25°C. All temperature limits are guaranteed by design.
Note 2: V_{REF} is defined as the average voltage of V_{REF1A} and VREF1B. REF1B is usually connected to REF1A or GND. V_{SENSE} is defined as V_{RS+} - V_{RS-}.
Note 3: The common-mode range at the low end of 4.5V applies to the most positive potential at RS+ or RS-. Depending on the polarity of V_{SENSE} and the device's gain, either RS+ or RS- can extend below 4.5V by the device's typical full-scale value of V_{SENSE}.
Note 4: Negative V_{SENSE} applies to MAX4081 only.
Note 5: V_{SENSE} is:
MAX4080F, 10mV to 1000mV
MAX4080T, 10mV to 250mV
MAX4080S, 10mV to 100mV
MAX4081F, -500mV to +500mV
MAX4081T, -125mV to +125mV
MAX4081S, -50mV to +50mV
Note 6: V_{OS} is extrapolated from the gain accuracy test for the MAX4080 and measured as (V_{OUT} - V_{REF})/AV at V_{SENSE} = 0V, for the MAX4081.
Note 7: V_{SENSE} is:
MAX4080F, 500mV
MAX4080T, 125mV
MAX4080S, 50mV
MAX4081F/T/S, 0V
V_{REF1B} = V_{REF1A} = 2.5V
Note 8: Output voltage is internally clamped not to exceed 18V.
Note 9: Output settles to within 1% of final value.
Note 10: The device will not experience phase reversal when overdriven.

Typical Operating Characteristics

(V_{CC} = V_{RS+} = 48V, V_{SENSE} = 0V, C_{LOAD} = 20pF, R_{LOAD} = ∞, T_A = +25°C, unless otherwise noted.)

INPUT OFFSET VOLTAGE HISTOGRAM

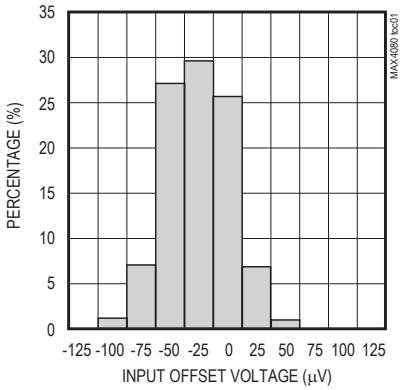

INPUT OFFSET VOLTAGE vs. TEMPERATURE

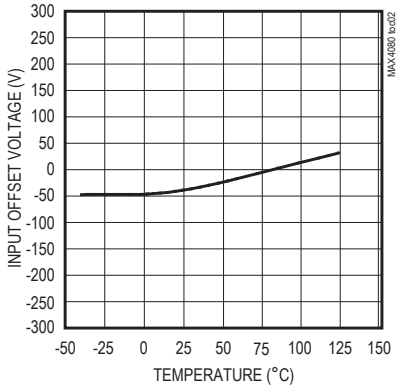

GAIN ACCURACY vs. TEMPERATURE

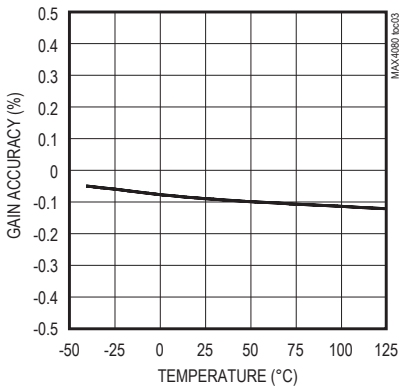

GAIN ACCURACY vs. V_{CC}

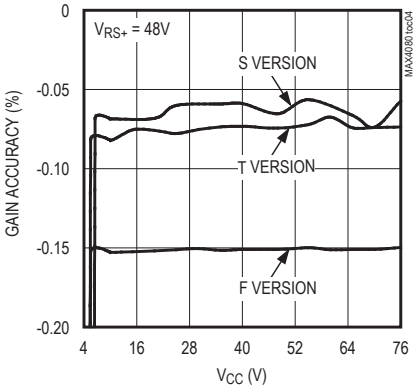

MAX4081F/T/S COMMON-MODE REJECTION RATIO vs. FREQUENCY

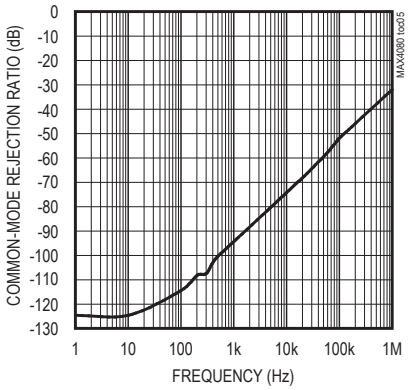

MAX4081F/T/S POWER-SUPPLY REJECTION RATIO vs. FREQUENCY

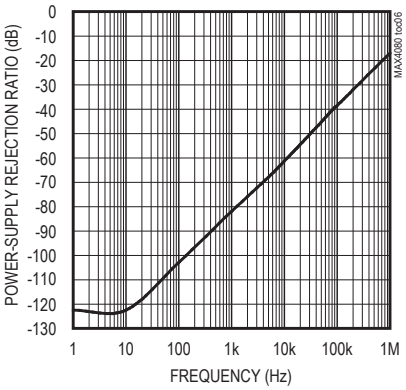

MAX4081F/T/S REFERENCE REJECTION RATIO vs. FREQUENCY

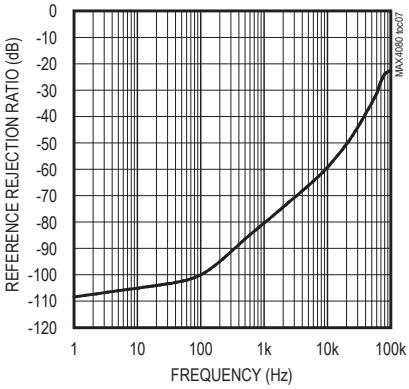

MAX4080F/T/S SMALL-SIGNAL GAIN vs. FREQUENCY

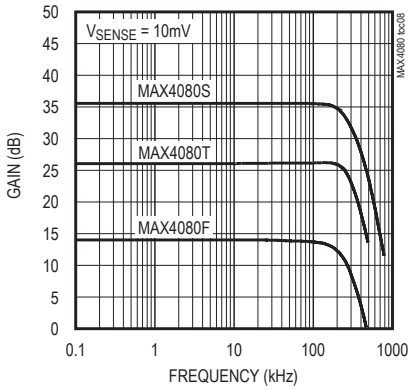

MAX4081F/T/S SMALL-SIGNAL GAIN vs. FREQUENCY

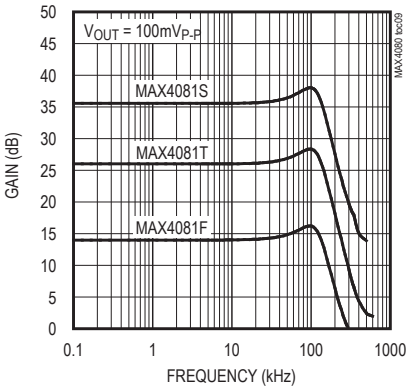

Typical Operating Characteristics (continued)

(V_{CC} = V_{RS+} = 48V, V_{SENSE} = 0V, C_{LOAD} = 20pF, R_{LOAD} = ∞, T_A = +25°C, unless otherwise noted.)

MAX4080
SUPPLY CURRENT vs. V_{CC}

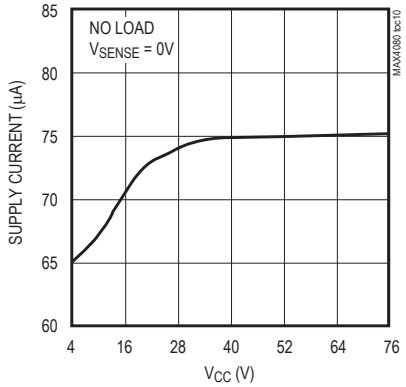

MAX4081
SUPPLY CURRENT vs. V_{CC}

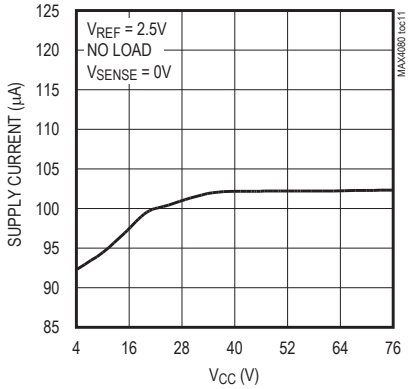

MAX4080
SUPPLY CURRENT vs. TEMPERATURE

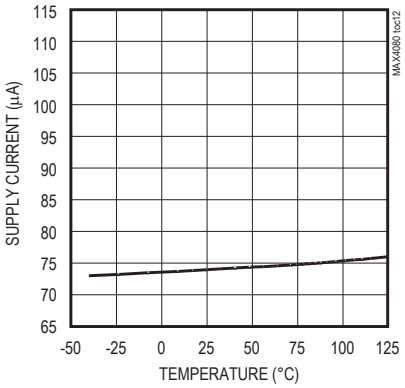

MAX4081
SUPPLY CURRENT vs. TEMPERATURE

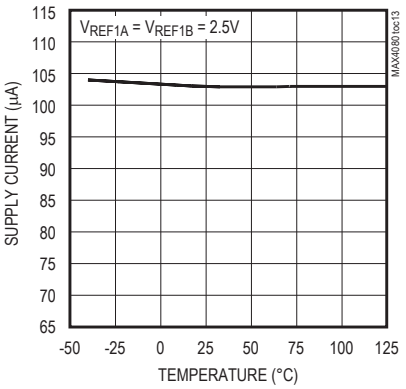

V_{OUT} HIGH VOLTAGE vs. I_{OUT} (SOURCING)

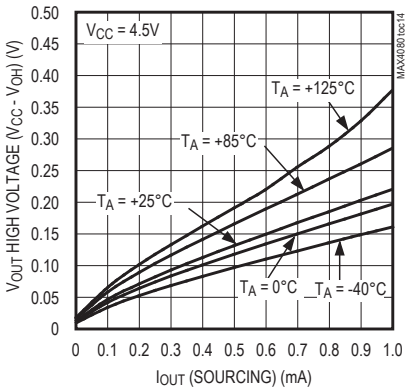

V_{OUT} LOW VOLTAGE vs. I_{OUT} (SINKING)

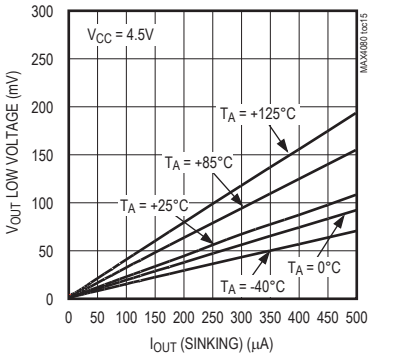

MAX4080F
SMALL-SIGNAL TRANSIENT RESPONSE

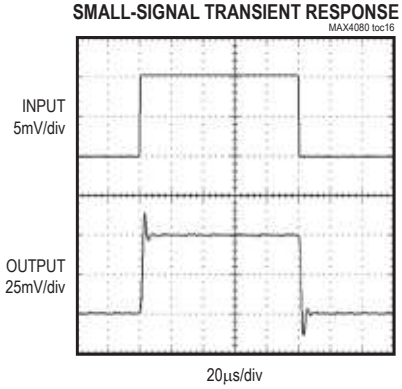

MAX4080T
SMALL-SIGNAL TRANSIENT RESPONSE

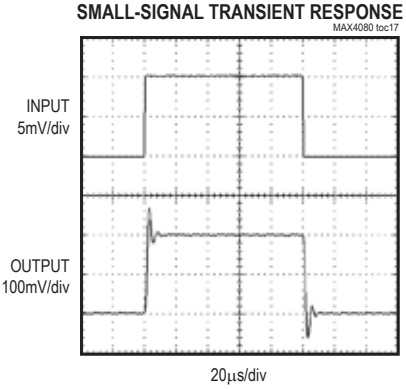

MAX4080S
SMALL-SIGNAL TRANSIENT RESPONSE

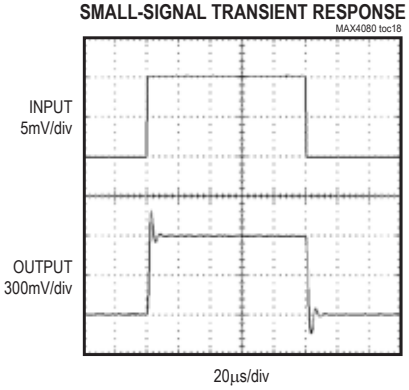

Typical Operating Characteristics (continued)

(V_{CC} = V_{RS+} = 48V, V_{SENSE} = 0V, C_{LOAD} = 20pF, R_{LOAD} = ∞, T_A = +25°C, unless otherwise noted.)

MAX4081F
SMALL-SIGNAL TRANSIENT RESPONSE

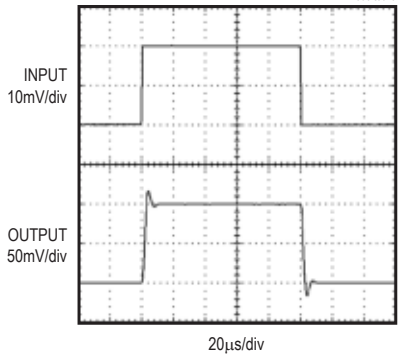

MAX4081T
SMALL-SIGNAL TRANSIENT RESPONSE

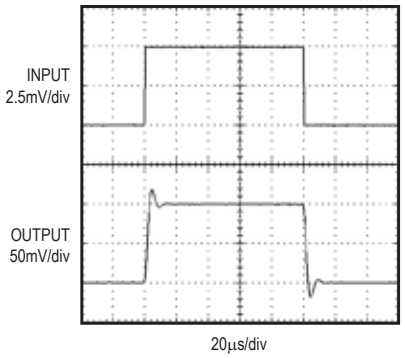

MAX4081S
SMALL-SIGNAL TRANSIENT RESPONSE

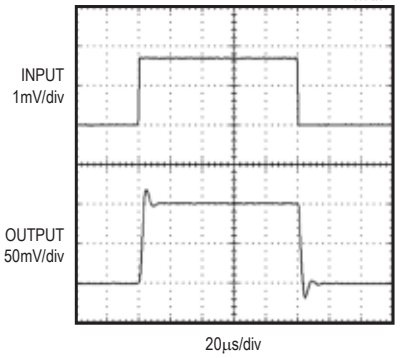

MAX4080F
LARGE-SIGNAL TRANSIENT RESPONSE

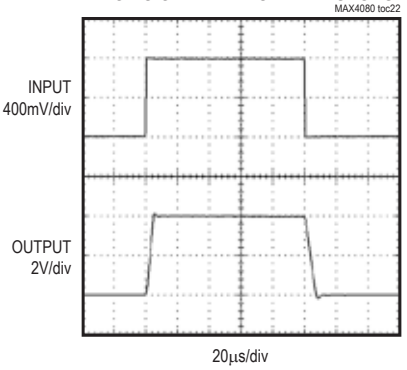

MAX4080T
LARGE-SIGNAL TRANSIENT RESPONSE

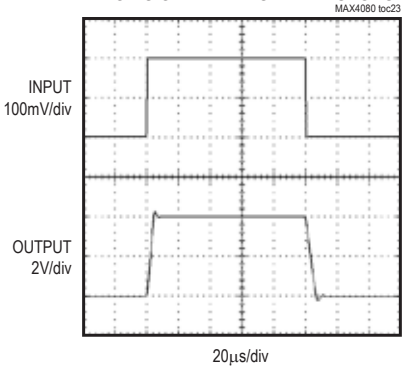

MAX4080S
LARGE-SIGNAL TRANSIENT RESPONSE

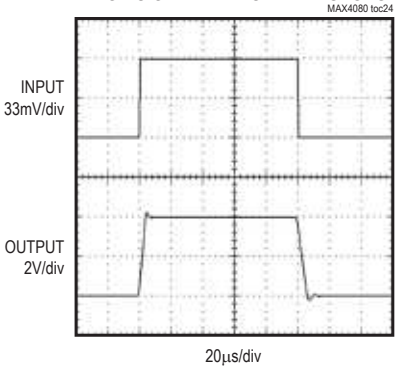

MAX4081F
LARGE-SIGNAL TRANSIENT RESPONSE

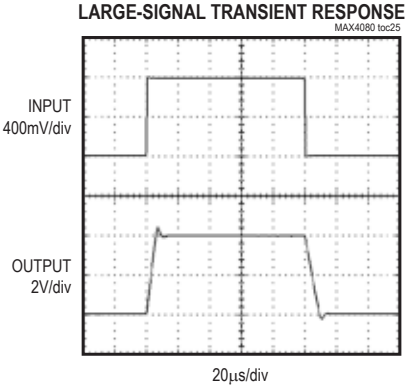

MAX4081T
LARGE-SIGNAL TRANSIENT RESPONSE

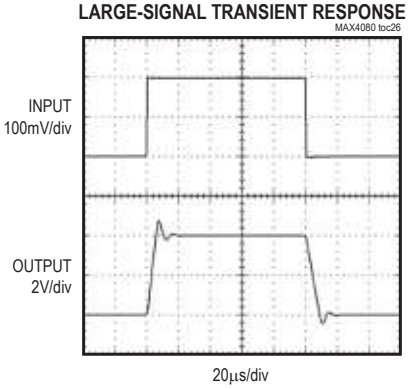

MAX4081S
LARGE-SIGNAL TRANSIENT RESPONSE

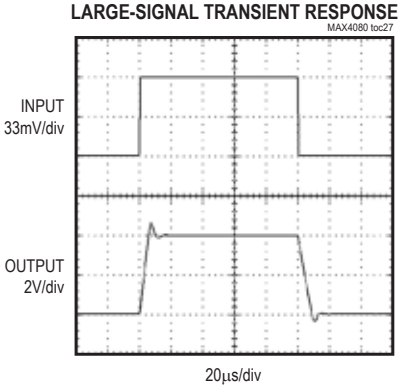

Typical Operating Characteristics (continued)

(V_{CC} = V_{RS+} = 48V, V_{SENSE} = 0V, C_{LOAD} = 20pF, R_{LOAD} = ∞, T_A = +25°C, unless otherwise noted.)

V_{CC}-TRANSIENT RESPONSE

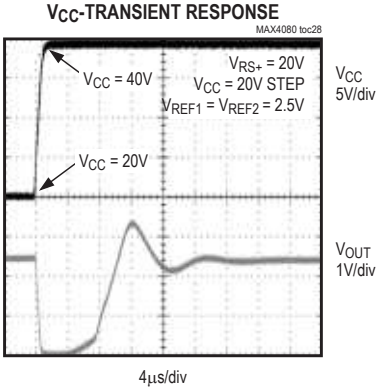

MAX4080F SATURATION RECOVERY RESPONSE (V_{CC} = 4.5V)

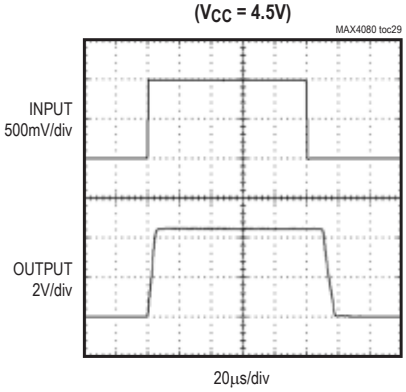

MAX4080T STARTUP DELAY (V_{SENSE} = 250mV)

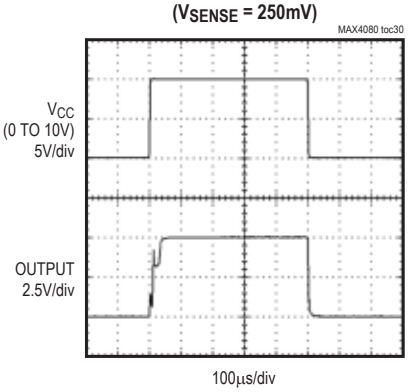

Pin Description

PIN		NAME	FUNCTION
MAX4080	MAX4081		
1	1	RS+	Power connection to the external-sense resistor.
2	2	VCC	Supply Voltage Input. Decouple VCC to GND with at least a 0.1µF capacitor to bypass line transients.
3, 6, 7	3	N.C.	No Connection. No internal connection. Leave open or connect to ground.
4	4	GND	Ground
5	5	OUT	Voltage Output. For the unidirectional MAX4080, VOUT is proportional to VSENSE. For the bidirectional MAX4081, the difference voltage (VOUT - VREF) is proportional to VSENSE and indicates the correct polarity.
8	8	RS-	Load connection to the external sense resistor.
—	6	REF1B	Reference Voltage Input: Connect REF1B to REF1A or to GND (see the *External Reference* section).
—	7	REF1A	Reference Voltage Input: Connect REF1A and REF1B to a fixed reference voltage (VREF). VOUT is equal to VREF when VSENSE is zero (see the *External Reference* section).

Detailed Description

The MAX4080/MAX4081 unidirectional and bidirectional high-side, current-sense amplifiers feature a 4.5V to 76V input common-mode range that is independent of supply voltage. This feature allows the monitoring of current out of a battery as low as 4.5V and also enables high-side current sensing at voltages greater than the supply voltage (V_{CC}). The MAX4080/MAX4081 monitors current through a current-sense resistor and amplifies the voltage across the resistor. The MAX4080 senses current unidirectionally, while the MAX4081 senses current bidirectionally.

The 76V input voltage range of the MAX4080/MAX4081 applies independently to both supply voltage (V_{CC}) and common-mode, input-sense voltage (V_{RS+}). High-side current monitoring does not interfere with the ground path of the load being measured, making the MAX4080/MAX4081 particularly useful in a wide range of high-voltage systems.

Battery-powered systems require a precise bidirectional current-sense amplifier to accurately monitor the battery's charge and discharge. The MAX4081 charging current is represented by an output voltage from V_{REF} to V_{CC}, while discharge current is given from V_{REF} to GND. Measurements of OUT with respect to V_{REF} yield a positive and negative voltage during charge and discharge, as illustrated in Figure 1 for the MAX4081T.

Current Monitoring

The MAX4080 operates as follows: current from the source flows through R_{SENSE} to the load (Figure 2), creating a sense voltage, V_{SENSE}. Since the internal-sense amplifier's inverting input has high impedance, negligible current flows through RG2 (neglecting the input bias current). Therefore, the sense amplifier's inverting input voltage equals V_{SOURCE} - (I_{LOAD})(R_{SENSE}). The amplifier's open-loop gain forces its noninverting input to the same voltage as the inverting input. Therefore, the drop across RG1 equals V_{SENSE}. The internal current mirror multiplies I_{RG1} by a current gain factor, β, to give I_{A2} = β × IRG1. Amplifier A2 is used to convert the output current to a voltage and then sent through amplifier A3. Total gain = 5V/V for MAX4080F, 20V/V for the MAX4080T, and 60V/V for the MAX4080S.

The MAX4081 input stage differs slightly from the MAX4080 (Figure 3). Its topology allows for monitoring of bidirectional currents through the sense resistor. When current flows from RS+ to RS-, the MAX4081 matches the voltage drop across the external sense resistor, R_{SENSE}, by increasing the current through the Q1 and RG1. In this way, the voltages at the input terminals of the internal amplifier A1 are kept constant and an accurate measurement of the sense voltage is achieved. In the following amplifier stages of the MAX4081, the output signal of amplifier A2 is level- shifted to the reference voltage (V_{REF} = V_{REF1A} = V_{REF1B}), resulting in a voltage at the output pin (OUT)

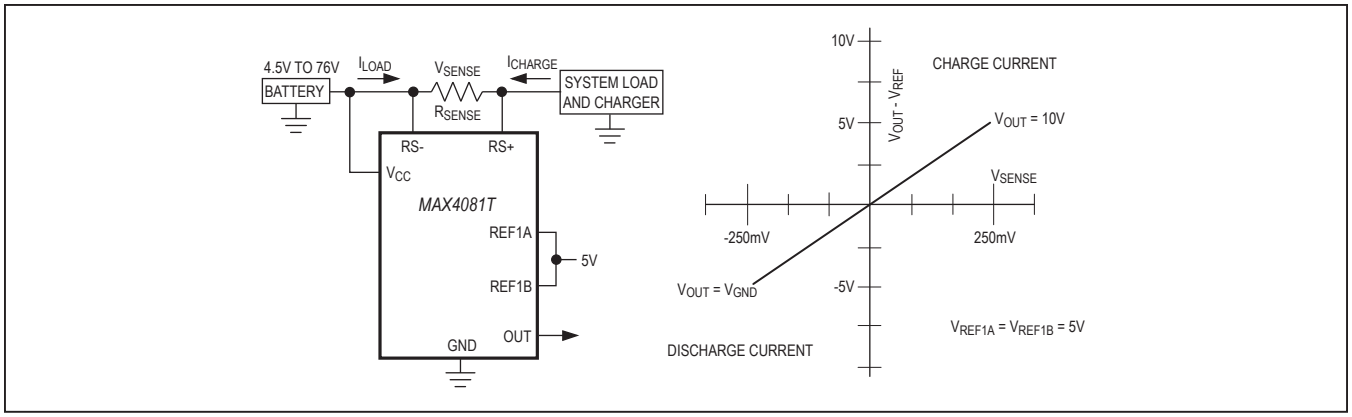

Figure 1. MAX4081T OUT Transfer Curve

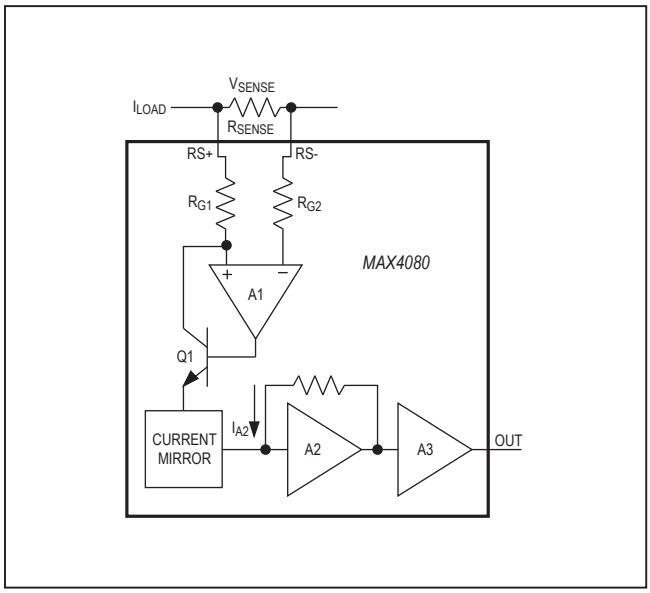

Figure 2. MAX4080 Functional Diagram

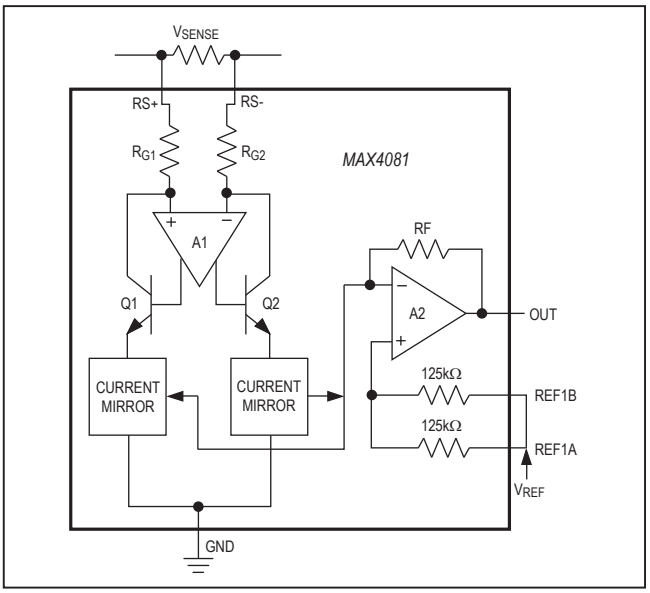

Figure 3. MAX4081 Functional Diagram

that swings above V_{REF} voltage for positive-sense voltages and below V_{REF} for negative-sense voltages. V_{OUT} is equal to V_{REF} when V_{SENSE} is equal to zero.

Set the full-scale output range by selecting R_{SENSE} and the appropriate gain version of the MAX4080/MAX4081.

Note: For Gain = 5 (F), $R_{G1} = R_{G2} = 160k$.
For Gain = 20 (T), $R_{G1} = R_{G2} = 60k$.
For Gain = 60 (S), $R_{G1} = R_{G2} = 20k$.

Table 1. Typical Component Values

FULL-SCALE LOAD CURRENT, ILOAD (A)	CURRENT-SENSE RESISTOR (mΩ)	GAIN (V/V)	FULL-SCALE VSENSE (mV)	MAX4081 FULL-SCALE OUTPUT VOLTAGE (VOUT - VREF, V)
0.500	1000	5	±500	±2.5
0.125	1000	20	±125	±2.5
0.050	1000	60	±50	±3.0
5.000	100	5	±500	±2.5
1.250	100	20	±125	±2.5
0.500	100	60	±50	±3.0
50.000	10	5	±500	±2.5
12.500	10	20	±125	±2.5
5.000	10	60	±50	±3.0
FULL-SCALE LOAD CURRENT, ILOAD (A)	**CURRENT-SENSE RESISTOR (mΩ)**	**GAIN (V/V)**	**FULL-SCALE VSENSE (mV)**	**MAX4080 FULL-SCALE OUTPUT VOLTAGE (V)**
1.000	1000	5	1000	5.0
0.250	1000	20	250	5.0
0.100	1000	60	100	6.0
10.000	100	5	1000	5.0
2.500	100	20	250	5.0
1.000	100	60	100	6.0
50.000	10	5	500	2.5
25.000	10	20	250	5.0
10.000	10	60	100	6.0

External References (MAX4081)

For the bidirectional MAX4081, the V_{OUT} reference level is controlled by REF1A and REF1B. V_{REF} is defined as the average voltage of V_{REF1A} and V_{REF1B}. Connect REF1A and REF1B to a low-noise, regulated voltage source to set the output reference level. In this mode, V_{OUT} equals V_{REF1A} when V_{SENSE} equals zero (see Figure 4).

Alternatively, connect REF1B to ground, and REF1A to a low-noise, regulated voltage source. In this case, the output reference level (V_{REF}) is equal to V_{REF1A} divided by two. V_{OUT} equals $V_{REF1A}/2$ when V_{SENSE} equals zero.

In either mode, the output swings above the reference voltage for positive current-sensing ($V_{RS+} > V_{RS-}$). The output swings below the reference voltage for negative current-sensing ($V_{RS+} < V_{RS-}$).

Applications Information

Recommended Component Values

Ideally, the maximum load current develops the full-scale sense voltage across the current-sense resistor. Choose the gain needed to yield the maximum output voltage required for the application:

$$V_{OUT} = V_{SENSE}\ 5\ A_V$$

where V_{SENSE} is the full-scale sense voltage, 1000mV for gain of 5V/V, 250mV for gain of 20V/V, 100mV for gain of 60V/V, and A_V is the gain of the device.

In applications monitoring a high current, ensure that R_{SENSE} is able to dissipate its own I^2R loss. If the resistor's power dissipation is exceeded, its value may drift or it may fail altogether.

The MAX4080/MAX4081 sense a wide variety of currents with different sense-resistor values. Table 1 lists common resistor values for typical operation.

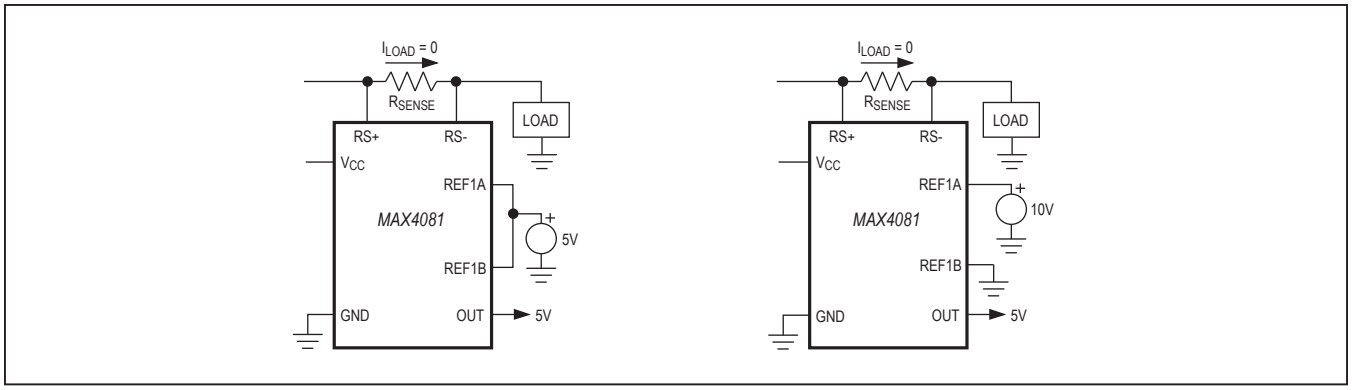

Figure 4. MAX4081 Reference Inputs

The full-scale output voltage is $V_{OUT} = R_{SENSE} \times I_{LOAD}$ (MAX) × A_V, for the MAX4080 and $V_{OUT} = V_{REF} \pm R_{SENSE} \times I_{LOAD(MAX)} \times A_V$ for the MAX4081. $V_{SENSE(MAX)}$ is 1000mV for the 5V/V gain version, 250mV for the 20V/V gain version, and 100mV for the 60V/V gain version.

Choosing the Sense Resistor

Choose R_{SENSE} based on the following criteria:

Voltage Loss: A high R_{SENSE} value causes the power-source voltage to degrade through IR loss. For minimal voltage loss, use the lowest R_{SENSE} value.

- Accuracy: A high R_{SENSE} value allows lower currents to be measured more accurately. This is due to offsets becoming less significant when the sense voltage is larger. For best performance, select R_{SENSE} to provide approximately 1000mV (gain of 5V/V), 250mV (gain of 20V/V), or 100mV (gain of 60V/V) of sense voltage for the full-scale current in each application.
- Efficiency and Power Dissipation: At high current levels, the I^2R losses in R_{SENSE} can be significant. Take this into consideration when choosing the resistor value and its power dissipation (wattage) rating. Also, the sense resistor's value might drift if it is allowed to heat up excessively.
- Inductance: Keep inductance low if I_{SENSE} has a large high-frequency component. Wire-wound resistors have the highest inductance, while metal film is somewhat better. Low-inductance, metal-film resistors are also available. Instead of being spiral- wrapped around a core, as in metal-film or wire-wound resistors, they are a straight band of metal and are available in values under 1Ω.

Because of the high currents that flow through R_{SENSE}, take care to eliminate parasitic trace resistance from causing errors in the sense voltage. Either use a four-terminal current-sense resistor or use Kelvin (force and sense) PC board layout techniques.

Dynamic Range Consideration

Although the MAX4081 have fully symmetrical bidirectional V_{SENSE} input capability, the output voltage range is usually higher from REF to V_{CC} and lower from REF to GND (unless the supply voltage is at the lowest end of the operating range). Therefore, the user must consider the dynamic range of current monitored in both directions and choose the supply voltage and the reference voltage (REF) to make sure the output swing above and below REF is adequate to handle the swings without clipping or running out of headroom.

Power-Supply Bypassing and Grounding

For most applications, bypass V_{CC} to GND with a 0.1µF ceramic capacitor. In many applications, V_{CC} can be connected to one of the current monitor terminals (RS+ or RS-). Because V_{CC} is independent of the monitored voltage, V_{CC} can be connected to a separate regulated supply.

If V_{CC} will be subject to fast-line transients, a series resistor can be added to the power-supply line of the MAX4080/MAX4081 to minimize output disturbance. This resistance and the decoupling capacitor reduce the rise time of the transient. For most applications, 1kΩ in conjunction with a 0.1µF bypass capacitor work well.

The MAX4080/MAX4081 require no special considerations with respect to layout or grounding. Consideration should be given to minimizing errors due to the large charge and discharge currents in the system.

Power Management

The bidirectional capability of the MAX4081 makes it an excellent candidate for use in smart battery packs. In the application diagram (Figure 5), the MAX4081 monitors the charging current into the battery as well as the discharge current out of the battery. The microcontroller stores this information, allowing the system to query the battery's status as needed to make system power-management decisions.

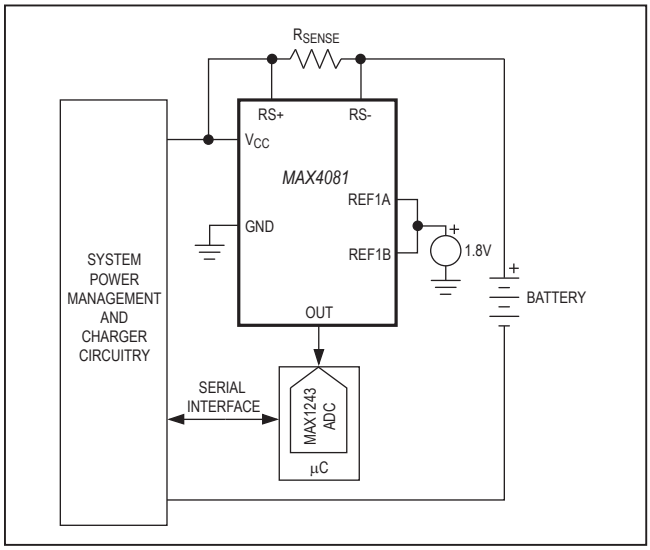

Figure 5. MAX4081 Used In Smart-Battery Application

Selector Guide

PART	GAIN (V/V)	ISENSE
MAX4080FAUA	5	Unidirectional
MAX4080FASA	5	Unidirectional
MAX4080TAUA	20	Unidirectional
MAX4080TASA	20	Unidirectional
MAX4080SAUA	60	Unidirectional
MAX4080SASA	60	Unidirectional
MAX4081FAUA	5	Bidirectional
MAX4081FASA	5	Bidirectional
MAX4081TAUA	20	Bidirectional
MAX4081TASA	20	Bidirectional
MAX4081SAUA	60	Bidirectional
MAX4081SASA	60	Bidirectional

Typical Operating Circuit

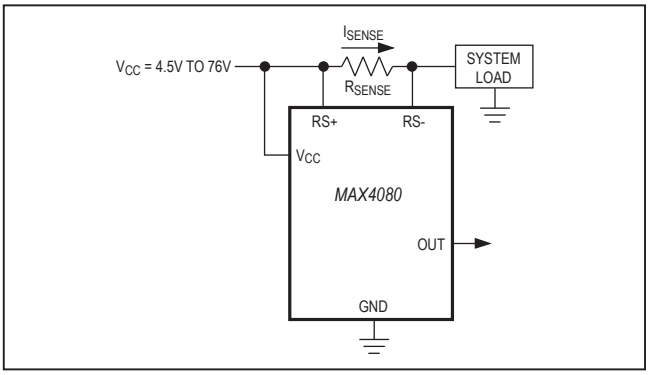

Chip Information

PROCESS: Bipolar

Ordering Information (continued)

PART	TEMP RANGE	PIN-PACKAGE
MAX4080TASA+	-40°C to +125°C	8 SO
MAX4080SAUA+	-40°C to +125°C	8 µMAX
MAX4080SAUA/V+	-40°C to +125°C	8 µMAX
MAX4080SASA+	-40°C to +125°C	8 SO
MAX4081FAUA+	-40°C to +125°C	8 µMAX
MAX4081FASA+	-40°C to +125°C	8 SO
MAX4081TAUA+	-40°C to +125°C	8 µMAX
MAX4081TASA+	-40°C to +125°C	8 SO
MAX4081SAUA+	-40°C to +125°C	8 µMAX
MAX4081SASA+	-40°C to +125°C	8 SO

+Denotes a lead(Pb)-free/RoHS-compliant package.

Package Information

For the latest package outline information and land patterns (footprints), go to **www.maximintegrated.com/packages**. Note that a "+", "#", or "-" in the package code indicates RoHS status only. Package drawings may show a different suffix character, but the drawing pertains to the package regardless of RoHS status.

PACKAGE TYPE	PACKAGE CODE	OUTLINE NO.	LAND PATTERN NO.
8 µMAX	U8+1	21-0036	90-0092
8 SO	S8+2	21-0041	90-0096

Revision History

REVISION NUMBER	REVISION DATE	DESCRIPTION	PAGES CHANGED
0	10/02	Initial release	—
1	11/08	Added values for RG1 and RG2	10
2	5/09	Added lead-free and automotive parts to *Ordering Information*	1
3	5/10	Removed automotive part and added soldering temperature	1, 2
4	7/11	Added automotive part designation	1
5	5/15	Updated *Benefits and Features* section	1
6	12/20	Updated *Package Information* section	13

For pricing, delivery, and ordering information, please visit Maxim Integrated's online storefront at https://www.maximintegrated.com/en/storefront/storefront.html.

Maxim Integrated cannot assume responsibility for use of any circuitry other than circuitry entirely embodied in a Maxim Integrated product. No circuit patent licenses are implied. Maxim Integrated reserves the right to change the circuitry and specifications without notice at any time. The parametric values (min and max limits) shown in the Electrical Characteristics table are guaranteed. Other parametric values quoted in this data sheet are provided for guidance.

Maxim Integrated and the Maxim Integrated logo are trademarks of Maxim Integrated Products, Inc. © 2020 Maxim Integrated Products, Inc.