MC78MXX/LM78MXX

3-Terminal 0.5A Positive Voltage Regulator

Features

- Output Current up to 0.5A
- Output Voltages of 5, 6, 8, 12, 15, 18, 24V
- Thermal Overload Protection
- Short Circuit Protection
- Output Transistor Safe Operating Area (SOA)Protection

Description

The MC78MXX/LM78MXX series of three-terminal positive regulators are available in the TO-220/D-PAK package with several fixed output voltages making it useful in a wide range of applications.

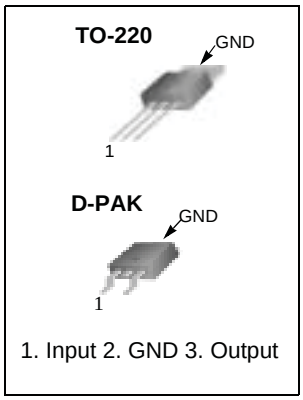

1. Input 2. GND 3. Output

Internal Block Digram

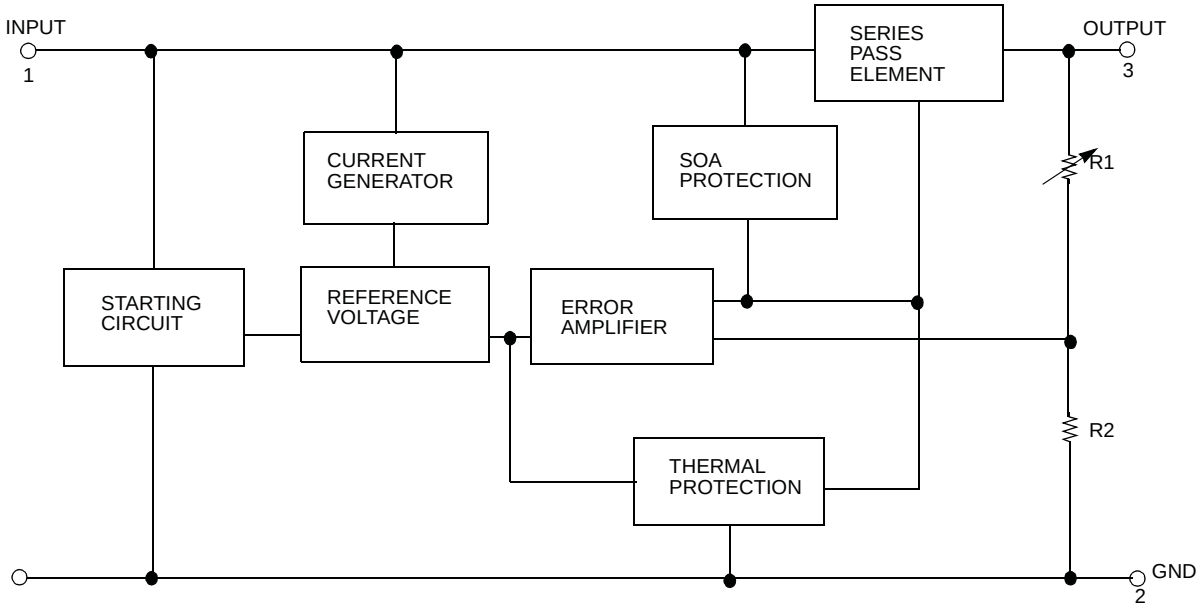

©2002 Fairchild Semiconductor Corporation

Absolute Maximum Ratings

Parameter	Symbol	Value	Unit
Input Voltage (for V_O = 5V to 18V) (for V_O = 24V)	V_I V_I	35 40	V V
Thermal Resistance Junction-Case (Note1) TO-220 (Tc = +25°C)	$R_{\theta JC}$	2.5	°C/W
Thermal Resistance Junction-Air (Note1, 2) TO-220 (Ta = +25°C) D-PAK (Ta = +25°C)	$R_{\theta JA}$	 66 92	°C/W
Operating Junction Temperature Range	T_{OPR}	0 ~ +150	°C
Storage Temperature Range	T_{STG}	-65 ~ +150	°C

Note:

1. Thermal resistance test board
   Size: 76.2mm * 114.3mm * 1.6mm(1S0P)
   JEDEC standard: JESD51-3, JESD51-7
2. Assume no ambient airflow

Electrical Characteristics (MC78M05/LM78M05)

(Refer to the test circuits, $0 \leq T_J \leq +125°C$, I_O=350mA, V_I=10V, unless otherwise specified, C_I = 0.33μF, C_O=0.1μF)

Parameter	Symbol	Conditions		Min.	Typ.	Max.	Unit
Output Voltage	V_O	T_J = +25°C		4.8	5	5.2	V
		I_O = 5mA to 350mA V_I = 7V to 20V		4.75	5	5.25	
Line Regulation (Note3)	ΔV_O	I_O = 200mA T_J =+25°C	V_I = 7V to 25V	-	-	100	mV
			V_I = 8V to 25V	-	-	50	
Load Regulation (Note3)	ΔV_O	I_O = 5mA to 0.5A, T_J =+25°C		-	-	100	mV
		I_O = 5mA to 200mA, T_J =+25 °C		-	-	50	
Quiescent Current	I_Q	T_J =+25°C		-	4.0	6.0	mA
Quiescent Current Change	ΔI_Q	I_O = 5mA to 350mA		-	-	0.5	mA
		I_O = 200mA V_I = 8V to 25V		-	-	0.8	
Output Voltage Drift	$\Delta V/\Delta T$	I_O = 5mA T_J = 0 to +125°C		-	-0.5	-	mV/°C
Output Noise Voltage	V_N	f = 10Hz to 100kHz		-	40	-	μV/Vo
Ripple Rejection	RR	f = 120Hz, I_O = 300mA V_I = 8V to 18V, T_J =+25 °C		-	80	-	dB
Dropout Voltage	V_D	T_J =+25°C, I_O = 500mA		-	2	-	V
Short Circuit Current	I_{SC}	T_J =+25°C, V_I = 35V		-	300	-	mA
Peak Current	I_{PK}	T_J =+25°C		-	700	-	mA

Note:

3. Load and line regulation are specified at constant junction temperature. Change in V_o due to heating effects must be taken into account separately. Pulse testing with low duty is used.

Electrical Characteristics (MC78M06) (Continued)

(Refer to the test circuits, $0 \leq T_J \leq +125°C$, I_O=350mA, V_I =11V, unless otherwise specified, C_I=0.33μF, C_O=0.1μF)

Parameter	Symbol	Conditions		Min.	Typ.	Max.	Unit
Output Voltage	V_O	T_J = +25°C		5.75	6	6.25	V
		I_O = 5mA to 350mA V_I = 8V to 21V		5.7	6	6.3	
Line Regulation (Note1)	ΔV_O	I_O = 200mA T_J = +25°C	V_I = 8V to 25V	-	-	100	mV
			V_I = 9V to 25V	-	-	50	
Load Regulation (Note1)	ΔV_O	I_O = 5mA to 0.5A, T_J = +25°C		-	-	120	mV
		I_O = 5mA to 200mA, T_J = +25°C		-	-	60	
Quiescent Current	I_Q	T_J = +25°C		-	4.0	6.0	mA
Quiescent Current Change	ΔI_Q	I_O = 5mA to 350mA		-	-	0.5	mA
		I_O = 200mA V_I = 9V to 25V		-	-	0.8	
Output Voltage Drift	$\Delta V/\Delta T$	I_O = 5mA T_J = 0 to +125°C		-	-0.5	-	mV/°C
Output Noise Voltage	V_N	f = 10Hz to 100kHz		-	45	-	μV/Vo
Ripple Rejection	RR	f = 120Hz, I_O = 300mA V_I = 9V to 19V, T_J =+25 °C		-	80	-	dB
Dropout Voltage	V_D	T_J =+25°C, I_O = 500mA		-	2	-	V
Short Circuit Current	I_{SC}	T_J = +25°C, V_I= 35V		-	300	-	mA
Peak Current	I_{PK}	T_J =+25°C		-	700	-	mA

Note:

1. Load and line regulation are specified at constant junction temperature. Change in V_o due to heating effects must be taken into account separately. Pulse testing with low duty is used.

Electrical Characteristics (MC78M08) (Continued)

(Refer to the test circuits, $0 \leq T_J \leq +125°C$, I_O=350mA, V_I=14V, unless otherwise specified, C_I = 0.33μF, C_O=0.1μF)

Parameter	Symbol	Conditions		Min.	Typ.	Max.	Unit
Output Voltage	V_O	T_J =+25°C		7.7	8	8.3	V
		I_O = 5mA to 350mA V_I = 10.5V to 23V		7.6	8	8.4	
Line Regulation (Note1)	ΔV_O	I_O = 200mA T_J =+25°C	V_I = 10.5V to 25V	-	-	100	mV
			V_I = 11V to 25V	-	-	50	
Load Regulation (Note1)	ΔV_O	I_O = 5mA to 0.5A, T_J =+25°C		-	-	160	mV
		I_O = 5mA to 200mA, T_J =+25°C		-	-	80	
Quiescent Current	I_Q	T_J = +25°C		-	4.0	6.0	mA
Quiescent Current Change	ΔI_Q	I_O = 5mA to 350mA		-	-	0.5	mA
		I_O = 200mA V_I = 10.5V to 25V		-	-	0.8	
Output Voltage Drift	RR	I_O = 5mA T_J = 0 to +125°C		-	–0.5	-	mV/°C
Output Noise Voltage	V_N	f = 10Hz to 100kHz		-	52	-	μV/Vo
Ripple Rejection	RR	f = 120Hz, I_O = 300mA V_I = 11.5V to 21.5V, T_J =+25 °C		-	80	-	dB
Dropout Voltage	V_D	T_J = +25°C, I_O = 500mA		-	2	-	V
Short Circuit Current	I_{SC}	T_J = +25°C, V_I = 35V		-	300	-	mA
Peak Current	I_{PK}	T_J = +25°C		-	700	-	mA

Note:

1. Load and line regulation are specified at constant junction temperature. Change in V_O due to heating effects must be taken into account separately. Pulse testing with low duty is used.

Electrical Characteristics (MC78M12) (Continued)

(Refer to the test circuits, $0 \leq T_J \leq +125°C$, I_O=350mA, V_I=19V, unless otherwise specified, C_I =0.33µF, C_O=0.1µF)

Parameter	Symbol	Conditions		Min.	Typ.	Max.	Unit
Output Voltage	V_O	T_J = +25°C		11.5	12	12.5	V
		I_O = 5mA to 350mA V_I = 14.5V to 27V		11.4	12	12.6	
Line Regulation (Note1)	ΔV_O	I_O = 200mA T_J = +25°C	V_I = 14.5V to 30V	-	-	100	mV
			V_I = 16V to 30V	-	-	50	
Load Regulation (Note1)	ΔV_O	I_O = 5mA to 0.5A, T_J = +25°C		-	-	240	mV
		I_O = 5mA to 200mA, T_J = +25°C		-	-	120	
Quiescent Current	I_Q	T_J =+25°C		-	4.1	6.0	mA
Quiescent Current Change	ΔI_Q	I_O = 5mA to 350mA		-	-	0.5	mA
		I_O = 200mA V_I = 14.5V to 30V		-	-	0.8	
Output Voltage Drift	$\Delta V/\Delta T$	I_O = 5mA T_J = 0 to +125°C		-	-0.5	-	mV/°C
Output Noise Voltage	V_N	f = 10Hz to 100kHz		-	75	-	µV/Vo
Ripple Rejection	RR	f = 120Hz, I_O = 300mA V_I = 15V to 25V, T_J =+25 °C		-	80	-	dB
Dropout Voltage	V_D	T_J =+25°C, I_O = 500mA		-	2	-	V
Short Circuit Current	I_{SC}	T_J = +25°C, V_I = 35V		-	300	-	mA
Peak Current	I_{PK}	T_J = +25°C		-	700	-	mA

Note:

1. Load and line regulation are specified at constant junction temperature. Change in V_o due to heating effects must be taken into account separately. Pulse testing with low duty is used.

Electrical Characteristics (MC78M15) (Continued)

(Refer to the test circuits, $0 \leq T_J \leq +125°C$, I_O=350mA, V_I=23V, unless otherwise specified, C_I =0.33μF, C_O=0.1μF)

Parameter	Symbol	Conditions		Min.	Typ.	Max.	Unit
Output Voltage	V_O	T_J = +25°C		14.4	15	15.6	V
		I_O = 5mA to 350mA V_I = 17.5V to 30V		14.25	15	15.75	
Line Regulation (Note1)	ΔV_O	I_O = 200mA T_J =+25°C	V_I = 17.5V to 30V	-	-	100	mV
			V_I = 20V to 30V	-	-	50	
Load Regulation (Note1)	ΔV_O	I_O = 5mA to 0.5A, T_J =+25°C		-	-	300	mV
		I_O = 5mA to 200mA, T_J =+25°C		-	-	150	
Quiescent Current	I_Q	T_J = +25°C		-	4.1	6.0	mA
Quiescent Current Change	ΔI_Q	I_O = 5mA to 350mA		-	-	0.5	mA
		I_O = 200mA V_I = 17.5V to 30V		-	-	0.8	
Output Voltage Drift	$\Delta V/\Delta T$	I_O = 5mA T_J = 0 to +125°C		-	-1	-	mV/°C
Output Noise Voltage	V_N	f = 10Hz to 100kHz		-	100	-	μV/Vo
Ripple Rejection	RR	f = 120Hz, I_O = 300mA V_I = 18.5V to 28.5V, T_J =+25 °C		-	70	-	dB
Dropout Voltage	V_D	T_J =+25°C, I_O = 500mA		-	2	-	V
Short Circuit Current	I_{SC}	T_J = +25°C, V_I = 35V		-	300	-	mA
Peak Current	I_{PK}	T_J = +25°C		-	700	-	mA

Note:

1. Load and line regulation are specified at constant junction temperature. Change in V_O due to heating effects must be taken into account separately. Pulse testing with low duty is used.

Electrical Characteristics (MC78M18) (Continued)

(Refer to the test circuits, $0 \leq T_J \leq +125°C$, I_O=350mA, V_I=26V, unless otherwise specified, C_I =0.33μF, C_O=0.1μF)

Parameter	Symbol	Conditions		Min.	Typ.	Max.	Unit
Output Voltage	V_O	T_J = +25°C		17.3	18	18.7	V
		I_O = 5mA to 350mA V_I = 20.5V to 33V		17.1	18	18.9	
Line Regulation (Note1)	ΔV_O	I_O = 200mA T_J = +25°C	V_I = 21V to 33V	-	-	100	mV
			V_I = 24V to 33V	-	-	50	
Load Regulation (Note1)	ΔVO	I_O = 5mA to 0.5A, T_J = +25°C		-	-	360	mV
		I_O = 5mA to 200mA, T_J = +25°C		-	-	180	
Quiescent Current	I_Q	T_J = +25°C		-	4.2	6.0	mA
Quiescent Current Change	ΔI_Q	I_O = 5mA to 350mA		-	-	0.5	mA
		I_O = 200mA V_I = 21V to 33V		-	-	0.8	
Output Voltage Drift	$\Delta V/\Delta T$	I_O = 5mAT_J = 0 to 125°C		-	-1.1	-	mV/°C
Output Noise Voltage	V_N	f = 10Hz to 100kHz		-	100	-	μV/Vo
Ripple Rejection	RR	f = 120Hz, I_O= 300mA , V_I = 22V to 32V T_J =+25 °C		-	70	-	dB
Dropout Voltage	V_D	T_J = +25°C, I_O = 500mA		-	2	-	V
Short Circuit Current	I_{SC}	T_J = +25°C, V_I = 35V		-	300	-	mA
Peak Current	I_{PK}	T_J = +25°C		-	700	-	mA

Note:

1. Load and line regulation are specified at constant junction temperature. Change in V_O due to heating effects must be taken into account separately. Pulse testing with low duty is used.

Electrical Characteristics (MC78M24) (Continued)

(Refer to the test circuits, $0 \leq T_J \leq +125°C$, I_O=350mA, V_I=33V, unless otherwise specified, C_I =0.33μF, C_O=0.1μF)

Parameter	Symbol	Conditions		Min.	Typ.	Max.	Unit
Output Voltage	V_O	T_J =+25°C		23	24	25	V
		I_O = 5mA to 350mA V_I = 27V to 38V		22.8	24	25.2	
Line Regulation (Note1)	ΔV_O	I_O = 200mA T_J =+25°C	V_I = 27V to 38V	-	-	100	mV
			V_I = 28V to 38V	-	-	50	
Load Regulation (Note1)	ΔV_O	I_O = 5mA to 0.5A, T_J =+25°C		-	-	480	mV
		I_O = 5mA to 200mA, T_J =+25°C		-	-	240	
Quiescent Current	I_Q	T_J = +25°C		-	4.2	6.0	mA
Quiescent Current Change	ΔI_Q	I_O = 5mA to 350mA		-	-	0.5	mA
		I_O = 200mA V_I = 27V to 38V		-	-	0.8	
Output Voltage Drift	$\Delta V/\Delta T$	I_O = 5mA T_J = 0 to +125°C		-	-1.2	-	mV/°C
Output Noise Voltage	V_N	f = 10Hz to 100kHz		-	170	-	μV/Vo
Ripple Rejection	RR	f = 120Hz, I_O = 300mA V_I = 28V to 38V, T_J =+25 °C		-	70	-	dB
Dropout Voltage	V_D	T_J = +25°C, I_O = 500mA		-	2	-	V
Short Circuit Current	I_{SC}	T_J = +25°C, V_I = 35V		-	300	-	mA
Peak Current	I_{PK}	T_J = +25°C		-	700	-	mA

Note:

1. Load and line regulation are specified at constant junction temperature. Change in V_O due to heating effects must be taken into account separately. Pulse testing with low duty is used.

Typical Applications

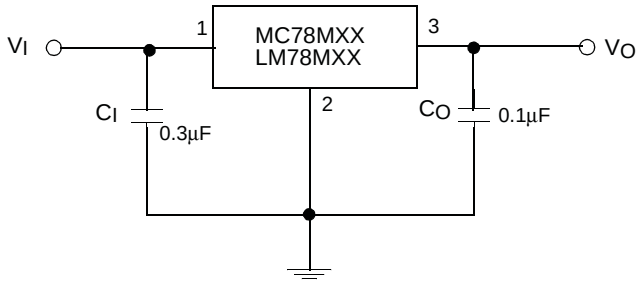

Figure 1. Fixed Output Regulator

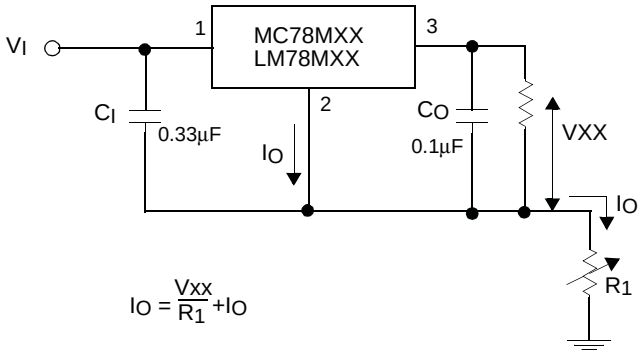

Figure 2. Constant Current Regulator

Notes:

1. To specify an output voltage, substitute voltage value for "XX"
2. Although no output capacitor is needed for stability, it does improve transient response.
3. C_I is required if regulator is located an appreciable distance from power Supply filter

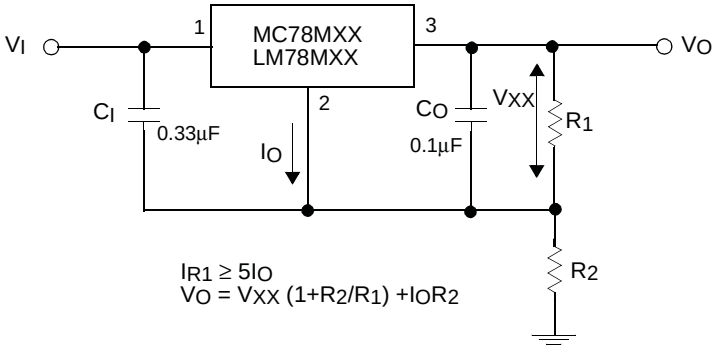

Figure 3. Circuit for Increasing Output Voltage

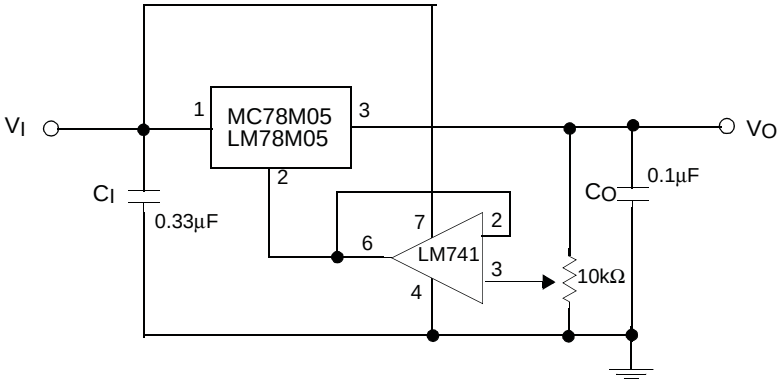

Figure 4. Adjustable Output Regulator (7 to 30V)

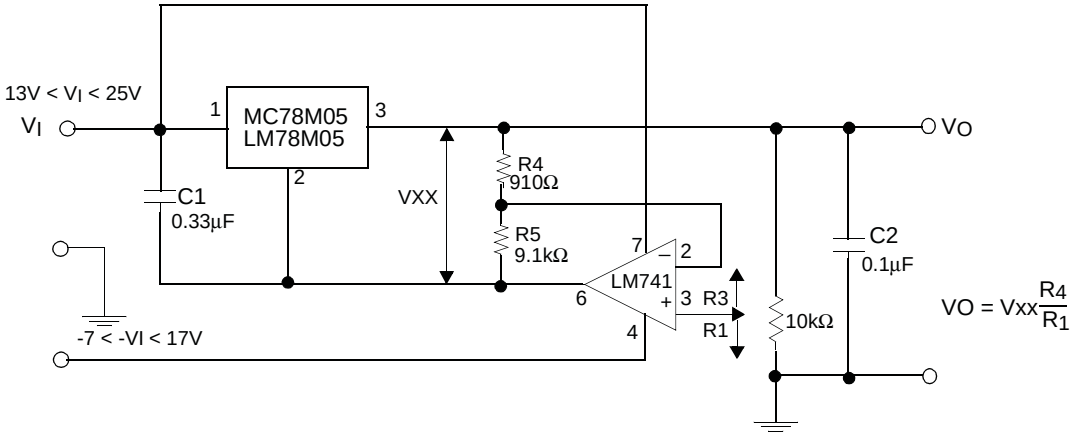

Figure 5. 0.5 to 10V Regulator

Mechanical Dimensions

Package

Dimensions in millimeters

TO-220

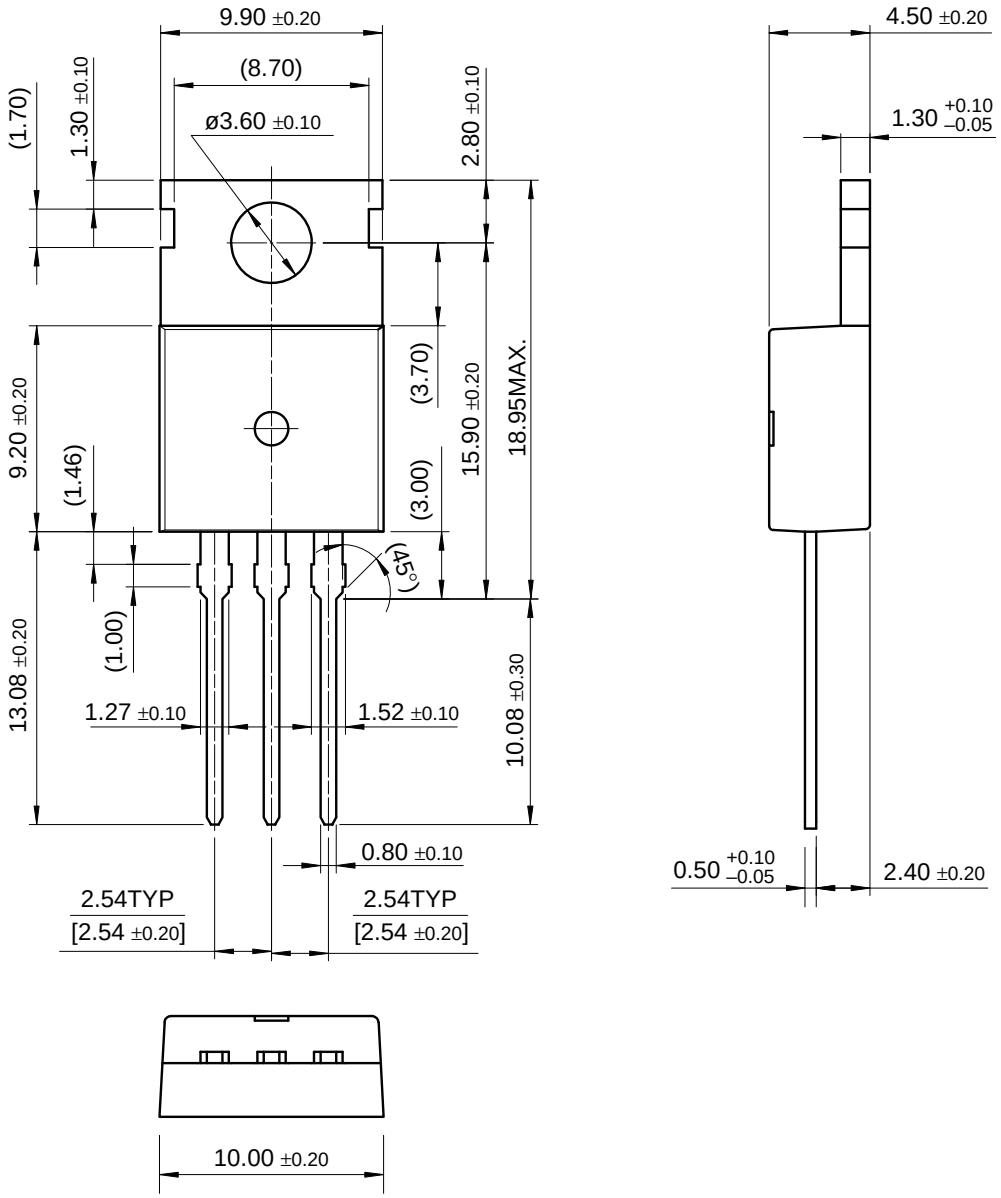

Mechanical Dimensions (Continued)

Package

Dimensions in millimeters

D-PAK

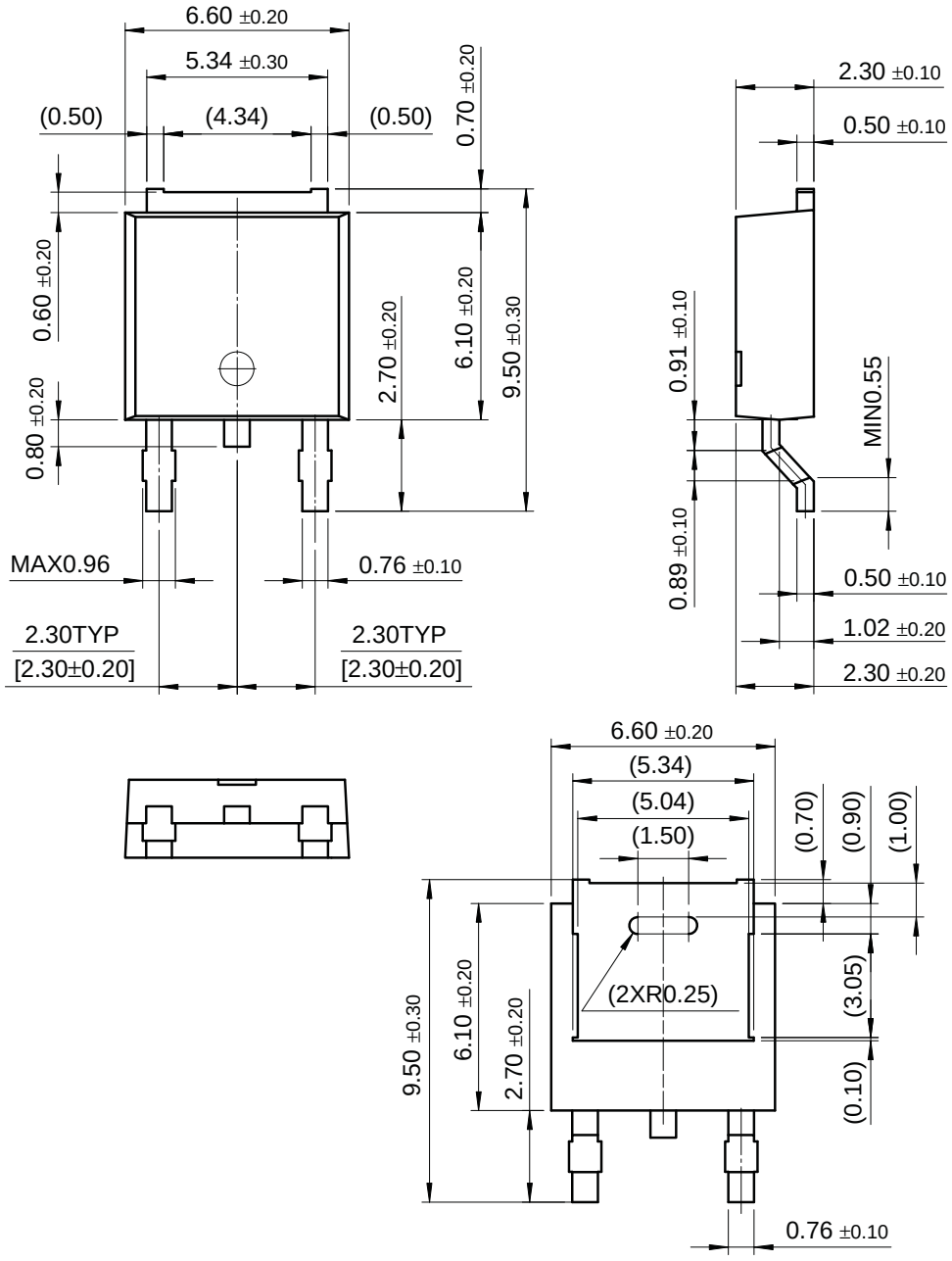

Ordering Information

Product Number	Package	Operating Temperature
LM78M05CT	TO-220	0 ~ +125°C

Product Number	Package	Operating Temperature
MC78M05CT	TO-220	0 ~ +125°C
MC78M06CT		
MC78M08CT		
MC78M12CT		
MC78M15CT		
MC78M18CT		
MC78M24CT		
MC78M05CDT	D-PAK	
MC78M06CDT		
MC78M08CDT		
MC78M12CDT		

DISCLAIMER

FAIRCHILD SEMICONDUCTOR RESERVES THE RIGHT TO MAKE CHANGES WITHOUT FURTHER NOTICE TO ANY PRODUCTS HEREIN TO IMPROVE RELIABILITY, FUNCTION OR DESIGN. FAIRCHILD DOES NOT ASSUME ANY LIABILITY ARISING OUT OF THE APPLICATION OR USE OF ANY PRODUCT OR CIRCUIT DESCRIBED HEREIN; NEITHER DOES IT CONVEY ANY LICENSE UNDER ITS PATENT RIGHTS, NOR THE RIGHTS OF OTHERS.

LIFE SUPPORT POLICY

FAIRCHILD'S PRODUCTS ARE NOT AUTHORIZED FOR USE AS CRITICAL COMPONENTS IN LIFE SUPPORT DEVICES OR SYSTEMS WITHOUT THE EXPRESS WRITTEN APPROVAL OF THE PRESIDENT OF FAIRCHILD SEMICONDUCTOR CORPORATION. As used herein:

1. Life support devices or systems are devices or systems which, (a) are intended for surgical implant into the body, or (b) support or sustain life, and (c) whose failure to perform when properly used in accordance with instructions for use provided in the labeling, can be reasonably expected to result in a significant injury of the user.
2. A critical component in any component of a life support device or system whose failure to perform can be reasonably expected to cause the failure of the life support device or system, or to affect its safety or effectiveness.

11/12/02 0.0m 001
Stock#DSxxxxxxxx
© 2002 Fairchild Semiconductor Corporation