MCF5272 ColdFire® Integrated Microprocessor

User's Manual

ColdFire®
Microcontrollers

MCF5272UM
Rev. 3
03/2007

freescale.com

freescale™
semiconductor

Overview 1
ColdFire Core 2
Hardware Multiply/Accumulate (MAC) Unit 3
Local Memory 4
Debug Support 5
System Integration Module (SIM) 6
Interrupt Controller 7
Chip-Select Module 8
SDRAM Controller 9
DMA Controller Module 10
Ethernet Module 11
Universal Serial Bus (USB) 12
Physical Layer Interface Controller (PLIC) 13
Queued Serial Peripheral Interface (QSPI) Module 14
Timer Module 15
UART Modules 16
General-Purpose I/O Module 17
Pulse-Width Modulation (PWM) Module 18
Signal Descriptions 19
Bus Operation 20
IEEE 1149.1 Test Access Port (JTAG) 21
Mechanical Data 22
Electrical Characteristics 23
Appendix A: List of Memory Maps A
Appendix B: Buffering and Impedence Matching B
Index IND

1 Overview
2 ColdFire Core
3 Hardware Multiply/Accumulate (MAC) Unit
4 Local Memory
5 Debug Support
6 System Integration Module (SIM)
7 Interrupt Controller
8 Chip-Select Module
9 SDRAM Controller
10 DMA Controller Module
11 Ethernet Module
12 Universal Serial Bus (USB)
13 Physical Layer Interface Controller (PLIC)
14 Queued Serial Peripheral Interface (QSPI) Module
15 Timer Module
16 UART Modules
17 General-Purpose I/O Module
18 Pulse-Width Modulation (PWM) Module
19 Signal Descriptions
20 Bus Operation
21 IEEE 1149.1 Test Access Port (JTAG)
22 Mechanical Data
23 Electrical Characteristics
A Appendix A: List of Memory Maps
B Appendix B: Buffering and Impedence Matching
IND Index

List of Figures

Figure Number	Title	Page Number
1-1	MCF5272 Block Diagram	1-2
2-1	ColdFire Pipeline	2-2
2-2	ColdFire Multiply-Accumulate Functionality Diagram	2-3
2-3	ColdFire Programming Model	2-5
2-4	Condition Code Register (CCR)	2-6
2-5	Status Register (SR)	2-8
2-6	Vector Base Register (VBR)	2-8
2-7	Organization of Integer Data Formats in Data Registers	2-10
2-8	Organization of Integer Data Formats in Address Registers	2-10
2-9	Memory Operand Addressing	2-11
2-10	Exception Stack Frame Form	2-27
3-1	ColdFire MAC Multiplication and Accumulation	3-1
3-2	MAC Programming Model	3-2
4-1	SRAM Base Address Register (RAMBAR)	4-3
4-2	ROM Base Address Register (ROMBAR)	4-5
4-3	Instruction Cache Block Diagram	4-8
4-4	Cache Control Register (CACR)	4-12
4-5	Access Control Register Format (ACRn)	4-14
5-1	Processor/Debug Module Interface	5-1
5-2	PSTCLK Timing	5-2
5-3	Example JMP Instruction Output on PST/DDATA	5-5
5-4	Debug Programming Model	5-6
5-5	Address Attribute Trigger Register (AATR)	5-7
5-6	Address Breakpoint Registers (ABLR, ABHR)	5-9
5-7	Configuration/Status Register (CSR)	5-10
5-8	Data Breakpoint/Mask Registers (DBR and DBMR)	5-12
5-9	Program Counter Breakpoint Register (PBR)	5-13
5-10	Program Counter Breakpoint Mask Register (PBMR)	5-13
5-11	Trigger Definition Register (TDR)	5-14
5-12	BDM Serial Interface Timing	5-17
5-13	Receive BDM Packet	5-18
5-14	Transmit BDM Packet	5-18
5-15	BDM Command Format	5-20
5-16	Command Sequence Diagram	5-21
5-17	RAREG/RDREG Command Format	5-22
5-18	RAREG/RDREG Command Sequence	5-22
5-19	WAREG/WDREG Command Format	5-23
5-20	WAREG/WDREG Command Sequence	5-23
5-21	READ Command/Result Formats	5-24
5-22	READ Command Sequence	5-24

List of Figures (Continued)

Figure Number	Title	Page Number
5-23	WRITE Command Format	5-25
5-24	WRITE Command Sequence	5-26
5-25	DUMP Command/Result Formats	5-27
5-26	DUMP Command Sequence	5-27
5-27	FILL Command Format	5-28
5-28	FILL Command Sequence	5-29
5-29	GO Command Format	5-29
5-30	GO Command Sequence	5-29
5-31	NOP Command Format	5-30
5-32	NOP Command Sequence	5-30
5-33	RCREG Command/Result Formats	5-30
5-34	RCREG Command Sequence	5-31
5-35	WCREG Command/Result Formats	5-31
5-36	WCREG Command Sequence	5-31
5-37	RDMREG BDM Command/Result Formats	5-32
5-38	RDMREG Command Sequence	5-32
5-39	WDMREG BDM Command Format	5-33
5-40	WDMREG Command Sequence	5-33
5-41	Recommended BDM Connector	5-41
6-1	SIM Block Diagram	6-1
6-2	Module Base Address Register (MBAR)	6-4
6-3	System Configuration Register (SCR)	6-5
6-4	System Protection Register (SPR)	6-6
6-5	Power Management Register (PMR)	6-7
6-6	Activate Low-Power Register (ALPR)	6-10
6-7	Device Identification Register (DIR)	6-11
6-8	Watchdog Reset Reference Register (WRRR)	6-12
6-9	Watchdog Interrupt Reference Register (WIRR)	6-12
6-10	Watchdog Counter Register (WCR)	6-13
6-11	Watchdog Event Register (WER)	6-13
7-1	Interrupt Controller Block Diagram	7-2
7-2	Interrupt Control Register 1 (ICR1)	7-4
7-3	Interrupt Control Register 2 (ICR2)	7-5
7-4	Interrupt Control Register 3 (ICR3)	7-5
7-5	Interrupt Control Register 4(ICR4)	7-5
7-6	Interrupt Source Register (ISR)	7-6
7-7	Programmable Interrupt Transition Register (PITR)	7-7
7-8	Programmable Interrupt Wakeup Register (PIWR)	7-8
7-9	Programmable Interrupt Vector Register (PIVR)	7-9
8-1	Chip Select Base Registers (CSBRn)	8-3
8-2	Chip Select Option Registers (CSORn)	8-5
9-1	SDRAM Controller Signals	9-2
9-2	54-Pin TSOP SDRAM Pin Definition	9-3
9-3	SDRAM Configuration Register (SDCR)	9-6

List of Figures (Continued)

Figure Number	Title	Page Number
9-4	SDRAM Timing Register (SDTR)	9-8
9-5	Example Setup Time Violation on SDRAM Data Input during Write	9-12
9-6	Timing Refinement with Inverted SDCLK	9-13
9-7	Timing Refinement with True CAS Latency and Inverted SDCLK	9-13
9-8	Timing Refinement with Effective CAS Latency	9-14
9-9	SDRAM Burst Read, 32-Bit Port, Page Miss, Access = 9-1-1-1	9-16
9-10	SDRAM Burst Read, 32-Bit Port, Page Hit, Access = 5-1-1-1	9-17
9-11	SDRAM Burst Write, 32-Bit Port, Page Miss, Access = 7-1-1-1	9-18
9-12	SDRAM Burst Write, 32-Bit Port, Page Hit, Access = 3-1-1-1	9-19
9-13	SDRAM Refresh Cycle	9-20
9-14	Enter SDRAM Self-Refresh Mode	9-21
9-15	Exit SDRAM Self-Refresh Mode	9-22
10-1	DMA Mode Register (DMR)	10-2
10-2	DMA Interrupt Register (DIR)	10-4
10-3	DMA Source Address Register (DSAR)	10-5
10-4	DMA Destination Address Register (DDAR)	10-6
10-5	DMA Byte Count Register (DBCR)	10-6
11-1	Ethernet Block Diagram	11-2
11-2	Fast Ethernet Module Block Diagram	11-2
11-3	Ethernet Frame Format	11-4
11-4	Ethernet Address Recognition Flowchart	11-7
11-5	Ethernet Control Register (ECR)	11-11
11-6	Interrupt Event Register (EIR)	11-12
11-7	Interrupt Mask Register (EIMR)	11-13
11-8	Interrupt Vector Status Register (IVSR)	11-14
11-9	Receive Descriptor Active Register (RDAR)	11-15
11-10	Transmit Descriptor Active Register (TDAR)	11-16
11-11	MII Management Frame Register (MMFR)	11-17
11-12	MII Speed Control Register (MSCR)	11-18
11-13	FIFO Receive Bound Register (FRBR)	11-19
11-14	FIFO Receive Start Register (FRSR)	11-20
11-15	Transmit FIFO Watermark (TFWR)	11-21
11-16	FIFO Transmit Start Register (TFSR)	11-22
11-17	Receive Control Register (RCR)	11-23
11-18	Maximum Frame Length Register (MFLR)	11-24
11-19	Transmit Control Register (TCR)	11-25
11-20	RAM Perfect Match Address Low (MALR)	11-26
11-21	RAM Perfect Match Address High (MAUR)	11-27
11-22	Hash Table High (HTUR)	11-28
11-23	Hash Table Low (HTLR)	11-29
11-24	Pointer-to-Receive Descriptor Ring (ERDSR)	11-30
11-25	Pointer-to-Transmit Descriptor Ring (ETDSR)	11-31
11-26	Receive Buffer Size (EMRBR)	11-32
11-27	Receive Buffer Descriptor (RxBD)	11-35

List of Figures (Continued)

Figure Number	Title	Page Number
11-28	Transmit Buffer Descriptor (TxBD)	11-37
12-1	The USB “Tiered Star” Topology	12-2
12-2	USB Module Block Diagram	12-3
12-3	USB Frame Number Register (FNR)	12-9
12-4	USB Frame Number Match Register (FNMR)	12-9
12-5	USB Real-Time Frame Monitor Register (RFMR)	12-10
12-6	USB Real-Time Frame Monitor Match Register (RFMMR)	12-11
12-7	USB Function Address Register (FAR)	12-11
12-8	USB Alternate Settings Register (ASR)	12-12
12-9	USB Device Request Data 1 Register (DRR1)	12-13
12-10	USB Device Request Data 2 Register (DRR2)	12-13
12-11	USB Specification Number Register (SPECR)	12-14
12-12	USB Endpoint 0 Status Register (EP0SR)	12-14
12-13	USB Endpoint 0 IN Configuration Register (IEP0CFG)	12-15
12-14	USB Endpoint 0 OUT Configuration Register	12-16
12-15	USB Endpoint 1–7 Configuration Register	12-16
12-16	USB Endpoint 0 Control Register (EP0CTL)	12-17
12-17	USB Endpoint 1-7 Control Register (EPnCTL)	12-20
12-18	USB Endpoint 0 Interrupt Mask (EP0IMR) and General/Endpoint 0 Interrupt Registers (EP0ISR)	12-22
12-19	USB Endpoints 1–7 Interrupt Status Registers (EPnISR)	12-25
12-20	USB Endpoint 1-7 Interrupt Mask Registers (EPnIMR)	12-26
12-21	USB Endpoint 0-7 Data Registers (EPnDR)	12-27
12-22	USB Endpoint 0-7 Data Present Registers (EPnDPR)	12-28
12-23	Example USB Configuration Descriptor Structure	12-29
12-24	Recommended USB Line Interface	12-36
12-25	USB Protection Circuit	12-37
13-1	PLIC System Diagram	13-2
13-2	GCI/IDL Receive Data Flow	13-3
13-3	GCI/IDL B-Channel Receive Data Register Demultiplexing	13-4
13-4	GCI/IDL Transmit Data Flow	13-4
13-5	GCI/IDL B Data Transmit Register Multiplexing	13-5
13-6	B-Channel Unencoded and HDLC Encoded Data	13-6
13-7	D-Channel HDLC Encoded and Unencoded Data.	13-7
13-8	D-Channel Contention	13-8
13-9	GCI/IDL Loopback Mode	13-9
13-10	Periodic Frame Interrupt	13-10
13-11	PLIC Internal Timing Signal Routing	13-12
13-12	PLIC Clock Generator	13-12
13-13	B1 Receive Data Registers P0B1RR–P3B1RR	13-15
13-14	B2 Receive Data Registers P0B2RR – P3B2RR	13-16
13-15	D Receive Data Registers P0DRR–P3DRR	13-16
13-16	B1 Transmit Data Registers P0B1TR–P3B1TR	13-17
13-17	B2 Transmit Data Registers P0B2TR–P3B2TR	13-17

List of Figures (Continued)

Figure Number	Title	Page Number
13-18	D Transmit Data Registers P0DTR–P3DTR	13-18
13-19	Port Configuration Registers (P0CR–P3CR)	13-18
13-20	Loopback Control Register (PLCR)	13-20
13-21	Interrupt Configuration Registers (P0ICR–P3ICR)	13-20
13-22	Periodic Status Registers (P0PSR–P3PSR)	13-22
13-23	Aperiodic Status Register (PASR)	13-23
13-24	GCI Monitor Channel Receive Registers (P0GMR–P3GMR)	13-24
13-25	GCI Monitor Channel Transmit Registers (P0GMT–P3GMT)	13-25
13-26	GCI Monitor Channel Transmit Abort Register (PGMTA)	13-26
13-27	GCI Monitor Channel Transmit Status Register (PGMTS)	13-27
13-28	GCI C/I Channel Receive Registers (P0GCIR–P3GCIR)	13-28
13-29	GCI C/I Channel Transmit Registers (P0GCIT–P3GCIT)	13-29
13-30	GCI C/I Channel Transmit Status Register (PGCITSR)	13-30
13-31	D-Channel Status Register (PDCSR)	13-31
13-32	D-Channel Request Registers (PDRQR)	13-32
13-33	Sync Delay Registers (P0SDR–P3SDR)	13-33
13-34	Clock Select Register (PCSR)	13-34
13-35	Port 1 Configuration Register (P1CR)	13-36
13-36	Port 1 Interrupt Configuration Register (P1ICR)	13-37
13-37	ISDN SOHO PABX Example	13-38
13-38	Standard IDL2 10-Bit Mode	13-39
13-39	ISDN SOHO PABX Example	13-40
13-40	Standard IDL2 10-Bit Mode	13-41
13-41	Two-Line Remote Access	13-41
13-42	Standard IDL2 8-Bit Mode	13-42
14-1	QSPI Block Diagram	14-2
14-2	QSPI RAM Model	14-5
14-3	QSPI Mode Register (QMR)	14-9
14-4	QSPI Clocking and Data Transfer Example	14-10
14-5	SPI Modes Timing	14-11
14-6	QSPI Delay Register (QDLYR)	14-11
14-7	QSPI Wrap Register (QWR)	14-12
14-8	QSPI Interrupt Register (QIR)	14-13
14-9	QSPI Address Register	14-14
14-10	QSPI Data Register	14-14
14-11	Command RAM Registers (QCR0–QCR15)	14-15
15-1	Timer Block Diagram	15-2
15-2	Timer Mode Registers (TMR0–TMR3)	15-3
15-3	Timer Reference Registers (TRR0–TRR3)	15-4
15-4	Timer Capture Registers (TCAP0–TCAP3)	15-4
15-5	Timer Counter (TCN0–TCN3)	15-4
15-6	Timer Event Registers (TER0–TER3)	15-5
16-1	Simplified Block Diagram	16-1
16-2	UART Mode Registers 1 (UMR1n)	16-4

List of Figures (Continued)

Figure Number	Title	Page Number
16-3	UART Mode Register 2 (UMR2n)	16-6
16-4	UART Status Registers (USRn)	16-7
16-5	UART Clock-Select Registers (UCSRn)	16-8
16-6	UART Command Registers (UCRn)	16-9
16-7	UART Receiver Buffer (URBn)	16-10
16-8	UART Transmitter Buffers (UTBn)	16-11
16-9	UART Input Port Change Registers (UIPCRn)	16-11
16-10	UART Auxiliary Control Registers (UACRn)	16-12
16-11	UART Interrupt Status/Mask Registers (UISRn/UIMRn)	16-13
16-12	UART Divider Upper Registers (UDUn)	16-14
16-13	UART Divider Lower Registers (UDLn)	16-14
16-14	UART Autobaud Upper Registers (UABUn)	16-14
16-15	UART Autobaud Lower Registers (UABLn)	16-14
16-16	UART Transmitter FIFO Registers (UTFn)	16-15
16-17	UART Receiver FIFO Registers (URFn)	16-16
16-18	UART Fractional Precision Divider Control Registers (UFPDn)	16-17
16-19	UART Input Port Registers (UIPn)	16-17
16-20	UART Output Port Command Registers (UOP1/UOP0)	16-18
16-21	UART Block Diagram Showing External and Internal Interface Signals	16-18
16-22	UART/RS-232 Interface	16-19
16-23	Clocking Source Diagram	16-20
16-24	Transmitter and Receiver Functional Diagram	16-22
16-25	Transmitter Timing	16-23
16-26	Receiver Timing	16-24
16-27	Automatic Echo	16-27
16-28	Local Loop-Back	16-27
16-29	Remote Loop-Back	16-28
16-30	Multidrop Mode Timing Diagram	16-29
16-31	UART Mode Programming Flowchart (Sheet 1 of 5)	16-30
17-1	Port A Control Register (PACNT)	17-3
17-2	Port B Control Register (PBCNT)	17-5
17-3	Port D Control Register (PDCNT)	17-8
17-4	Port A Data Direction Register (PADDR)	17-10
17-5	Port B Data Direction Register (PBDDR)	17-10
17-6	Port C Data Direction Register (PCDDR)	17-11
17-7	Port x Data Register (PADAT, PBDAT, and PCDAT)	17-11
18-1	PWM Block Diagram (3 Identical Modules)	18-1
18-2	PWM Control Registers (PWCRn)	18-3
18-3	PWM Width Register (PWWDn)	18-4
18-4	PWM Waveform Examples (PWCRn[EN] = 1)	18-4
19-1	MCF5272 Block Diagram with Signal Interfaces	19-2
20-1	Internal Operand Representation	20-5
20-2	MCF5272 Interface to Various Port Sizes	20-5
20-3	Longword Read; EBI = 00; 32-Bit Port; Internal Termination	20-8

List of Figures (Continued)

Figure Number	Title	Page Number
20-4	Word Write; EBI = 00; 16-/32-Bit Port; Internal Termination	20-9
20-5	Longword Read with Address Setup; EBI = 00; 32-Bit Port; Internal Termination	20-9
20-6	Longword Write with Address Setup; EBI = 00; 32-Bit Port; Internal Termination	20-10
20-7	Longword Read with Address Hold; EBI = 00; 32-Bit Port; Internal Termination	20-10
20-8	Longword Write with Address Hold; EBI = 00; 32-Bit Port; Internal Termination	20-11
20-9	Longword Read; EBI = 00; 32-Bit Port; Terminated by TA with One Wait State	20-11
20-10	Longword Read; EBI=11; 32-Bit Port; Internal Termination	20-12
20-11	Word Write; EBI=11; 16/32-Bit Port; Internal Termination	20-13
20-12	Read with Address Setup; EBI=11; 32-Bit Port; Internal Termination	20-14
20-13	Longword Write with Address Setup; EBI=11; 32-Bit Port; Internal Termination	20-14
20-14	Read with Address Hold; EBI=11; 32-Bit Port; Internal Termination	20-15
20-15	Longword Write with Address Hold; EBI=11; 32-Bit Port; Internal Termination	20-15
20-16	Longword Read with Address Setup and Address Hold; EBI = 11; 32-Bit Port, Internal Termination	20-16
20-17	Longword Write with Address Setup and Address Hold; EBI = 11; 32-Bit Port, Internal Termination	20-17
20-18	Example of a Misaligned Longword Transfer	20-18
20-19	Example of a Misaligned Word Transfer	20-18
20-20	Longword Write Access To 32-Bit Port Terminated with TEA Timing	20-20
20-21	Master Reset Timing	20-22
20-22	Normal Reset Timing	20-23
20-23	Software Watchdog Timer Reset Timing	20-24
20-24	Soft Reset Timing	20-25
21-1	Test Access Port Block Diagram	21-2
21-2	TAP Controller State Machine	21-3
21-3	Output Cell (O.Cell) (BC–1)	21-4
21-4	Input Cell (I.Cell). Observe only (BC–4)	21-5
21-5	Output Control Cell (En.Cell) (BC–4)	21-5
21-6	Bidirectional Cell (IO.Cell) (BC–6)	21-6
21-7	General Arrangement for Bidirectional Pins	21-6
21-8	Bypass Register	21-8
22-1	MCF5272 Pinout (196 MAPBGA)	22-1
22-2	196 MAPBGA Package Dimensions (Case No. 1128A-01)	22-2
23-1	Clock Input Timing Diagram	23-5
23-2	General Input Timing Requirements	23-7
23-3	Read/Write SRAM Bus Timing	23-9
23-4	SRAM Bus Cycle Terminated by TA	23-10
23-5	SRAM Bus Cycle Terminated by TEA	23-11
23-6	Reset and Mode Select/HIZ Configuration Timing	23-12
23-7	Real-Time Trace AC Timing	23-13
23-8	BDM Serial Port AC Timing	23-13
23-9	SDRAM Signal Timing	23-15
23-10	SDRAM Self-Refresh Cycle Timing	23-16
23-11	MII Receive Signal Timing Diagram	23-17

List of Figures (Continued)

Figure Number	Title	Page Number
23-12	MII Transmit Signal Timing Diagram	23-18
23-13	MII Async Inputs Timing Diagram	23-19
23-14	MII Serial Management Channel Timing Diagram	23-20
23-15	Timer Timing	23-21
23-16	UART Timing	23-22
23-17	IDL Master Timing	23-23
23-18	IDL Slave Timing	23-25
23-19	GCI Slave Mode Timing	23-26
23-20	GCI Master Mode Timing	23-27
23-21	General-Purpose I/O Port Timing	23-28
23-22	USB Interface Timing	23-29
23-23	IEEE 1149.1 (JTAG) Timing	23-30
23-24	QSPI Timing	23-31
23-25	PWM Timing	23-32
B-1	Buffering and Termination	B-2

Table of Contents

Paragraph Number	Title	Page Number

Chapter 1
Overview

1.1 MCF5272 Key Features 1-1
1.2 MCF5272 Architecture 1-4
1.2.1 Version 2 ColdFire Core 1-4
1.2.2 System Integration Module (SIM) 1-5
1.2.2.1 External Bus Interface 1-5
1.2.2.2 Chip Select and Wait State Generation 1-5
1.2.2.3 System Configuration and Protection 1-5
1.2.2.4 Power Management 1-6
1.2.2.5 Parallel Input/Output Ports 1-6
1.2.2.6 Interrupt Inputs 1-6
1.2.3 UART Module 1-6
1.2.4 Timer Module 1-7
1.2.5 Test Access Port 1-7
1.3 System Design 1-7
1.3.1 System Bus Configuration 1-7
1.4 MCF5272-Specific Features 1-7
1.4.1 Physical Layer Interface Controller (PLIC) 1-7
1.4.2 Pulse-Width Modulation (PWM) Unit 1-8
1.4.3 Queued Serial Peripheral Interface (QSPI) 1-8
1.4.4 Universal Serial Bus (USB) Module 1-8

Chapter 2
ColdFire Core

2.1 Features and Enhancements 2-1
2.1.1 Decoupled Pipelines 2-1
2.1.1.1 Instruction Fetch Pipeline (IFP) 2-2
2.1.1.2 Operand Execution Pipeline (OEP) 2-2
2.1.1.2.1 Illegal Opcode Handling 2-3
2.1.1.2.2 Hardware Multiply/Accumulate (MAC) Unit 2-3
2.1.1.2.3 Hardware Divide Unit 2-4
2.1.2 Debug Module Enhancements 2-4
2.2 Programming Model 2-4
2.2.1 User Programming Model 2-4
2.2.1.1 Data Registers (D0–D7) 2-5

Table of Contents (Continued)

Paragraph Number	Title	Page Number
2.2.1.2	Address Registers (A0–A6)	2-5
2.2.1.3	Stack Pointer (A7, SP)	2-5
2.2.1.4	Program Counter (PC)	2-6
2.2.1.5	Condition Code Register (CCR)	2-6
2.2.1.6	MAC Programming Model	2-7
2.2.2	Supervisor Programming Model	2-7
2.2.2.1	Status Register (SR)	2-8
2.2.2.2	Vector Base Register (VBR)	2-8
2.2.2.3	Cache Control Register (CACR)	2-9
2.2.2.4	Access Control Registers (ACR0–ACR1)	2-9
2.2.2.5	ROM Base Address Register (ROMBAR)	2-9
2.2.2.6	RAM Base Address Register (RAMBAR)	2-9
2.2.2.7	Module Base Address Register (MBAR)	2-9
2.3	Integer Data Formats	2-9
2.4	Organization of Data in Registers	2-10
2.4.1	Organization of Integer Data Formats in Registers	2-10
2.4.2	Organization of Integer Data Formats in Memory	2-11
2.5	Addressing Mode Summary	2-12
2.6	Instruction Set Summary	2-13
2.6.1	Instruction Set Summary	2-15
2.7	Instruction Timing	2-19
2.7.1	MOVE Instruction Execution Times	2-20
2.7.2	Execution Timings—One-Operand Instructions	2-22
2.7.3	Execution Timings—Two-Operand Instructions	2-22
2.7.4	Miscellaneous Instruction Execution Times	2-24
2.7.5	Branch Instruction Execution Times	2-25
2.8	Exception Processing Overview	2-25
2.8.1	Exception Stack Frame Definition	2-27
2.8.2	Processor Exceptions	2-28

Chapter 3
Hardware Multiply/Accumulate (MAC) Unit

3.1	Overview	3-1
3.1.1	MAC Programming Model	3-2
3.1.2	General Operation	3-3
3.1.3	MAC Instruction Set Summary	3-4
3.1.4	Data Representation	3-4
3.2	MAC Instruction Execution Timings	3-4

Table of Contents (Continued)

Paragraph Number	Title	Page Number

Chapter 4
Local Memory

4.1 Interactions between Local Memory Modules 4-1
4.2 Local Memory Registers 4-2
4.3 SRAM Overview 4-2
4.3.1 SRAM Operation 4-2
4.3.2 SRAM Programming Model 4-2
4.3.2.1 SRAM Base Address Register (RAMBAR) 4-3
4.3.2.2 SRAM Initialization 4-4
4.3.2.3 Programming RAMBAR for Power Management 4-4
4.4 ROM Overview 4-5
4.4.1 ROM Operation 4-5
4.4.2 ROM Programming Model 4-5
4.4.2.1 ROM Base Address Register (ROMBAR) 4-5
4.4.2.2 Programming ROMBAR for Power Management 4-6
4.5 Instruction Cache Overview 4-7
4.5.1 Instruction Cache Physical Organization 4-7
4.5.2 Instruction Cache Operation 4-8
4.5.2.1 Interaction with Other Modules 4-8
4.5.2.2 Cache Coherency and Invalidation 4-8
4.5.2.3 Caching Modes 4-9
4.5.2.3.1 Cacheable Accesses 4-9
4.5.2.3.2 Cache-Inhibited Accesses 4-9
4.5.2.4 Reset 4-10
4.5.2.5 Cache Miss Fetch Algorithm/Line Fills 4-10
4.5.3 Instruction Cache Programming Model 4-12
4.5.3.1 Cache Control Register (CACR) 4-12
4.5.3.2 Access Control Registers (ACR0 and ACR1) 4-14

Chapter 5
Debug Support

5.1 Overview 5-1
5.2 Signal Description 5-2
5.3 Real-Time Trace Support 5-3
5.3.1 Begin Execution of Taken Branch (PST = 0x5) 5-4
5.4 Programming Model 5-5
5.4.1 Revision A Shared Debug Resources 5-7
5.4.2 Address Attribute Trigger Register (AATR) 5-7
5.4.3 Address Breakpoint Registers (ABLR, ABHR) 5-9
5.4.4 Configuration/Status Register (CSR) 5-10

Table of Contents (Continued)

Paragraph Number	Title	Page Number
5.4.5	Data Breakpoint/Mask Registers (DBR, DBMR)	5-12
5.4.6	Program Counter Breakpoint/Mask Registers (PBR, PBMR)	5-13
5.4.7	Trigger Definition Register (TDR)	5-14
5.5	Background Debug Mode (BDM)	5-15
5.5.1	CPU Halt	5-16
5.5.2	BDM Serial Interface	5-17
5.5.2.1	Receive Packet Format	5-18
5.5.2.2	Transmit Packet Format	5-18
5.5.3	BDM Command Set	5-19
5.5.3.1	ColdFire BDM Command Format	5-20
5.5.3.1.1	Extension Words as Required	5-20
5.5.3.2	Command Sequence Diagrams	5-21
5.5.3.3	Command Set Descriptions	5-22
5.5.3.3.1	Read A/D Register (RAREG/RDREG)	5-22
5.5.3.3.2	Write A/D Register (WAREG/WDREG)	5-23
5.5.3.3.3	Read Memory Location (READ)	5-24
5.5.3.3.4	Write Memory Location (WRITE)	5-25
5.5.3.3.5	Dump Memory Block (DUMP)	5-27
5.5.3.3.6	Fill Memory Block (FILL)	5-28
5.5.3.3.7	Resume Execution (GO)	5-29
5.5.3.3.8	No Operation (NOP)	5-30
5.5.3.3.9	Read Control Register (RCREG)	5-30
5.5.3.3.10	Write Control Register (WCREG)	5-31
5.5.3.3.11	Read Debug Module Register (RDMREG)	5-32
5.5.3.3.12	Write Debug Module Register (WDMREG)	5-33
5.6	Real-Time Debug Support	5-33
5.6.1	Theory of Operation	5-34
5.6.1.1	Emulator Mode	5-35
5.6.2	Concurrent BDM and Processor Operation	5-35
5.7	Processor Status, DDATA Definition	5-36
5.7.1	User Instruction Set	5-36
5.7.2	Supervisor Instruction Set	5-40
5.8	Freescale-Recommended BDM Pinout	5-41

Chapter 6
System Integration Module (SIM)

6.1	Features	6-1
6.2	Programming Model	6-2
6.2.1	SIM Register Memory Map	6-2
6.2.2	Module Base Address Register (MBAR)	6-3

Table of Contents (Continued)

Paragraph Number	Title	Page Number
6.2.3	System Configuration Register (SCR)	6-5
6.2.4	System Protection Register (SPR)	6-6
6.2.5	Power Management Register (PMR)	6-7
6.2.6	Activate Low-Power Register (ALPR)	6-10
6.2.7	Device Identification Register (DIR)	6-11
6.2.8	Software Watchdog Timer	6-11
6.2.8.1	Watchdog Reset Reference Register (WRRR)	6-12
6.2.8.2	Watchdog Interrupt Reference Register (WIRR)	6-12
6.2.8.3	Watchdog Counter Register (WCR)	6-13
6.2.8.4	Watchdog Event Register (WER)	6-13

Chapter 7
Interrupt Controller

7.1	Overview	7-1
7.2	Interrupt Controller Registers	7-2
7.2.1	Interrupt Controller Registers	7-3
7.2.2	Interrupt Control Registers (ICR1–ICR4)	7-4
7.2.2.1	Interrupt Control Register 1 (ICR1)	7-4
7.2.2.2	Interrupt Control Register 2 (ICR2)	7-5
7.2.2.3	Interrupt Control Register 3 (ICR3)	7-5
7.2.2.4	Interrupt Control Register 4 (ICR4)	7-5
7.2.3	Interrupt Source Register (ISR)	7-6
7.2.4	Programmable Interrupt Transition Register (PITR)	7-7
7.2.5	Programmable Interrupt Wakeup Register (PIWR)	7-8
7.2.6	Programmable Interrupt Vector Register (PIVR)	7-9

Chapter 8
Chip Select Module

8.1	Overview	8-1
8.1.1	Features	8-1
8.1.2	Chip Select Usage	8-1
8.1.3	Boot CS0 Operation	8-2
8.2	Chip Select Registers	8-2
8.2.1	Chip Select Base Registers (CSBR0–CSBR7)	8-3
8.2.2	Chip Select Option Registers (CSOR0–CSOR7)	8-5

Table of Contents (Continued)

Paragraph Number	Title	Page Number

Chapter 9
SDRAM Controller

9.1 Overview 9-1
9.2 SDRAM Controller Signals 9-1
9.3 Interface to SDRAM Devices 9-4
9.4 SDRAM Banks, Page Hits, and Page Misses 9-6
9.5 SDRAM Registers 9-6
9.5.1 SDRAM Configuration Register (SDCR) 9-6
9.5.2 SDRAM Timing Register (SDTR) 9-8
9.6 Auto Initialization 9-9
9.7 Power-Down and Self-Refresh 9-9
9.8 Performance 9-10
9.9 Solving Timing Issues with SDCR[INV] 9-12
9.10 SDRAM Interface 9-14
9.10.1 SDRAM Read Accesses 9-15
9.10.2 SDRAM Write Accesses 9-18
9.10.3 SDRAM Refresh Timing 9-20

Chapter 10
DMA Controller

10.1 DMA Data Transfer Types 10-1
10.2 DMA Address Modes 10-2
10.3 DMA Controller Registers 10-2
10.3.1 DMA Mode Register (DMR) 10-2
10.3.2 DMA Interrupt Register (DIR) 10-4
10.3.3 DMA Source Address Register (DSAR) 10-5
10.3.4 DMA Destination Address Register (DDAR) 10-6
10.3.5 DMA Byte Count Register (DBCR) 10-6

Chapter 11
Ethernet Module

11.1 Overview 11-1
11.1.1 Features 11-1
11.2 Module Operation 11-1
11.3 Transceiver Connection 11-3
11.4 FEC Frame Transmission 11-4
11.4.1 FEC Frame Reception 11-5
11.4.2 CAM Interface 11-6
11.4.3 Ethernet Address Recognition 11-6
11.4.4 Hash Table Algorithm 11-8

Table of Contents (Continued)

Paragraph Number	Title	Page Number
11.4.5	Interpacket Gap Time	11-8
11.4.6	Collision Handling	11-8
11.4.7	Internal and External Loopback	11-8
11.4.8	Ethernet Error-Handling Procedure	11-9
11.4.8.1	Transmission Errors	11-9
11.4.8.2	Reception Errors	11-9
11.5	Programming Model	11-10
11.5.1	Ethernet Control Register (ECR)	11-11
11.5.2	Interrupt Event Register (EIR)	11-12
11.5.3	Interrupt Mask Register (EIMR)	11-13
11.5.4	Interrupt Vector Status Register (IVSR)	11-14
11.5.5	Receive Descriptor Active Register (RDAR)	11-15
11.5.6	Transmit Descriptor Active Register (TDAR)	11-16
11.5.7	MII Management Frame Register (MMFR)	11-17
11.5.8	MII Speed Control Register (MSCR)	11-18
11.5.9	FIFO Receive Bound Register (FRBR)	11-19
11.5.10	FIFO Receive Start Register (FRSR)	11-20
11.5.11	Transmit FIFO Watermark (TFWR)	11-21
11.5.12	FIFO Transmit Start Register (TFSR)	11-22
11.5.13	Receive Control Register (RCR)	11-23
11.5.14	Maximum Frame Length Register (MFLR)	11-24
11.5.15	Transmit Control Register (TCR)	11-25
11.5.16	RAM Perfect Match Address Low (MALR)	11-26
11.5.16.1	RAM Perfect Match Address High (MAUR)	11-27
11.5.17	Hash Table High (HTUR)	11-28
11.5.18	Hash Table Low (HTLR)	11-29
11.5.19	Pointer-to-Receive Descriptor Ring (ERDSR)	11-30
11.5.20	Pointer-to-Transmit Descriptor Ring (ETDSR)	11-31
11.5.21	Receive Buffer Size Register (EMRBR)	11-32
11.5.22	Initialization Sequence	11-33
11.5.22.1	Hardware Initialization	11-33
11.5.23	User Initialization (Prior to Asserting ETHER_EN)	11-33
11.5.24	FEC Initialization	11-34
11.5.24.1	User Initialization (after setting ETHER_EN)	11-34
11.6	Buffer Descriptors	11-34
11.6.1	FEC Buffer Descriptor Tables	11-35
11.6.1.1	Ethernet Receive Buffer Descriptor (RxBD)	11-35
11.6.1.2	Ethernet Transmit Buffer Descriptor	11-37
11.7	Differences between MCF5272 FEC and MPC860T FEC	11-39

Table of Contents (Continued)

Paragraph Number	Title	Page Number

Chapter 12
Universal Serial Bus (USB)

12.1 Introduction 12-1
12.2 Module Operation 12-2
12.2.1 USB Module Architecture 12-2
12.2.1.1 USB Transceiver Interface 12-3
12.2.1.2 Clock Generator 12-4
12.2.1.3 USB Control Logic 12-4
12.2.1.4 Endpoint Controllers 12-5
12.2.1.5 USB Request Processor 12-5
12.3 Register Description and Programming Model 12-7
12.3.1 USB Memory Map 12-7
12.3.2 Register Descriptions 12-9
12.3.2.1 USB Frame Number Register (FNR) 12-9
12.3.2.2 USB Frame Number Match Register (FNMR) 12-9
12.3.2.3 USB Real-Time Frame Monitor Register (RFMR) 12-10
12.3.2.4 USB Real-Time Frame Monitor Match Register (RFMMR) 12-11
12.3.2.5 USB Function Address Register (FAR) 12-11
12.3.2.6 USB Alternate Settings Register (ASR) 12-12
12.3.2.7 USB Device Request Data 1 and 2 Registers (DRR1/ 2) 12-13
12.3.2.8 USB Specification Number Register (SPECR) 12-14
12.3.2.9 USB Endpoint 0 Status Register (EP0SR) 12-14
12.3.2.10 USB Endpoint 0 IN Configuration Register (IEP0CFG) 12-15
12.3.2.11 USB Endpoint 0 OUT Configuration Register (OEP0CFG) 12-16
12.3.2.12 USB Endpoint 1–7 Configuration Register (EPnCFG) 12-16
12.3.2.13 USB Endpoint 0 Control Register (EP0CTL) 12-17
12.3.2.14 USB Endpoint 1–7 Control Register (EPnCTL) 12-20
12.3.2.15 USB Endpoint 0 Interrupt Mask (EP0IMR) and General/Endpoint 0 Interrupt Registers (EP0ISR) 12-22
12.3.2.16 USB Endpoints 1–7 Status / Interrupt Registers (EPnISR) 12-25
12.3.2.17 USB Endpoint 1–7 Interrupt Mask Registers (EPnIMR) 12-26
12.3.2.18 USB Endpoint 0–7 Data Registers (EPnDR) 12-27
12.3.2.19 USB Endpoint 0–7 Data Present Registers (EPnDPR) 12-28
12.3.3 Configuration RAM 12-28
12.3.3.1 Configuration RAM Content 12-28
12.3.3.2 USB Device Configuration Example 12-29
12.3.4 USB Module Access Times 12-30
12.3.4.1 Registers 12-30
12.3.4.2 Endpoint FIFOs 12-30
12.3.4.3 Configuration RAM 12-30

Table of Contents (Continued)

Paragraph Number	Title	Page Number
12.4	Software Architecture and Application Notes	12-31
12.4.1	USB Module Initialization	12-31
12.4.2	USB Configuration and Interface Changes	12-31
12.4.3	FIFO Configuration	12-32
12.4.4	Data Flow	12-32
12.4.4.1	Control, Bulk, and Interrupt Endpoints	12-33
12.4.4.1.1	IN Endpoints	12-33
12.4.4.1.2	OUT Endpoints	12-33
12.4.4.2	Isochronous Endpoints	12-33
12.4.4.2.1	IN Endpoints	12-34
12.4.4.2.2	OUT Endpoints	12-34
12.4.5	Class- and Vendor-Specific Request Operation	12-34
12.4.6	remote wakeup and resume Operation	12-35
12.4.7	Endpoint Halt Feature	12-35
12.5	Line Interface	12-36
12.5.1	Attachment Detection	12-36
12.5.2	PCB Layout Recommendations	12-36
12.5.3	Recommended USB Protection Circuit	12-37

Chapter 13
Physical Layer Interface Controller (PLIC)

13.1	Introduction	13-1
13.2	GCI/IDL Block	13-3
13.2.1	GCI/IDL B- and D-Channel Receive Data Registers	13-3
13.2.2	GCI/IDL B- and D-Channel Transmit Data Registers	13-4
13.2.3	GCI/IDL B- and D-Channel Bit Alignment	13-5
13.2.3.1	B-Channel Unencoded Data	13-5
13.2.3.2	B-Channel HDLC Encoded Data	13-6
13.2.3.3	D-Channel HDLC Encoded Data	13-6
13.2.3.4	D-Channel Unencoded Data	13-7
13.2.3.5	GCI/IDL D-Channel Contention	13-8
13.2.4	GCI/IDL Looping Modes	13-8
13.2.4.1	Automatic Echo Mode	13-9
13.2.4.2	Local Loopback Mode	13-9
13.2.4.3	Remote Loopback Mode	13-9
13.2.5	GCI/IDL Interrupts	13-9
13.2.5.1	GCI/IDL Periodic Frame Interrupt	13-9
13.2.5.2	GCI Aperiodic Status Interrupt	13-10
13.2.5.3	Interrupt Control	13-11
13.3	PLIC Timing Generator	13-11

Table of Contents (Continued)

Paragraph Number	Title	Page Number
13.3.1	Clock Synthesis	13-11
13.3.2	Super Frame Sync Generation	13-13
13.3.3	Frame Sync Synthesis	13-13
13.4	PLIC Register Memory Map	13-13
13.5	PLIC Registers	13-15
13.5.1	B1 Data Receive Registers (P0B1RR–P3B1RR)	13-15
13.5.2	B2 Data Receive Registers (P0B2RR–P3B2RR)	13-16
13.5.3	D Data Receive Registers (P0DRR–P3DRR)	13-16
13.5.4	B1 Data Transmit Registers (P0B1TR–P3B1TR)	13-17
13.5.5	B2 Data Transmit Registers (P0B2TR–P3B2TR)	13-17
13.5.6	D Data Transmit Registers (P0DTR–P3DTR)	13-18
13.5.7	Port Configuration Registers (P0CR–P3CR)	13-18
13.5.8	Loopback Control Register (PLCR)	13-20
13.5.9	Interrupt Configuration Registers (P0ICR–P3ICR)	13-20
13.5.10	Periodic Status Registers (P0PSR–P3PSR)	13-22
13.5.11	Aperiodic Status Register (PASR)	13-23
13.5.12	GCI Monitor Channel Receive Registers (P0GMR–P3GMR)	13-24
13.5.13	GCI Monitor Channel Transmit Registers (P0GMT–P3GMT)	13-25
13.5.14	GCI Monitor Channel Transmit Abort Register (PGMTA)	13-26
13.5.15	GCI Monitor Channel Transmit Status Register (PGMTS)	13-27
13.5.16	GCI C/I Channel Receive Registers (P0GCIR–P3GCIR)	13-28
13.5.17	GCI C/I Channel Transmit Registers (P0GCIT–P3GCIT)	13-29
13.5.18	GCI C/I Channel Transmit Status Register (PGCITSR)	13-30
13.5.19	D-Channel Status Register (PDCSR)	13-31
13.5.20	D-Channel Request Register (PDRQR)	13-32
13.5.21	Sync Delay Registers (P0SDR–P3SDR)	13-33
13.5.22	Clock Select Register (PCSR)	13-34
13.6	Application Examples	13-35
13.6.1	Introduction	13-35
13.6.2	PLIC Initialization	13-35
13.6.2.1	Port Configuration Example	13-35
13.6.2.2	Interrupt Configuration Example	13-37
13.6.3	Example 1: ISDN SOHO PBX with Ports 0, 1, 2, and 3	13-38
13.6.4	Example 2: ISDN SOHO PBX with Ports 1, 2, and 3	13-40
13.6.5	Example 3: Two-Line Remote Access with Ports 0 and 1	13-41

Table of Contents (Continued)

Paragraph Number	Title	Page Number

Chapter 14
Queued Serial Peripheral Interface (QSPI) Module

14.1 Overview 14-1
14.2 Features 14-1
14.3 Module Description 14-1
14.3.1 Interface and Pins 14-3
14.3.2 Internal Bus Interface 14-3
14.4 Operation 14-3
14.4.1 QSPI RAM 14-4
14.4.1.1 Receive RAM 14-5
14.4.1.2 Transmit RAM 14-6
14.4.1.3 Command RAM 14-6
14.4.2 Baud Rate Selection 14-6
14.4.3 Transfer Delays 14-7
14.4.4 Transfer Length 14-8
14.4.5 Data Transfer 14-8
14.5 Programming Model 14-9
14.5.1 QSPI Mode Register (QMR) 14-9
14.5.2 QSPI Delay Register (QDLYR) 14-11
14.5.3 QSPI Wrap Register (QWR) 14-12
14.5.4 QSPI Interrupt Register (QIR) 14-13
14.5.5 QSPI Address Register (QAR) 14-14
14.5.6 QSPI Data Register (QDR) 14-14
14.5.7 Command RAM Registers (QCR0–QCR15) 14-15
14.5.8 Programming Example 14-16

Chapter 15
Timer Module

15.1 Overview 15-1
15.2 Timer Operation 15-1
15.3 General-Purpose Timer Registers 15-3
15.3.1 Timer Mode Registers (TMR0–TMR3) 15-3
15.3.2 Timer Reference Registers (TRR0–TRR3) 15-4
15.3.3 Timer Capture Registers (TCAP0–TCAP3) 15-4
15.3.4 Timer Counters (TCN0–TCN3) 15-4
15.3.5 Timer Event Registers (TER0–TER3) 15-5

Table of Contents (Continued)

Paragraph Number | Title | Page Number

Chapter 16
UART Modules

16.1 Overview 16-1
16.2 Serial Module Overview 16-2
16.3 Register Descriptions 16-2
16.3.1 UART Mode Registers 1 (UMR1n) 16-4
16.3.2 UART Mode Register 2 (UMR2n) 16-6
16.3.3 UART Status Registers (USRn) 16-7
16.3.4 UART Clock-Select Registers (UCSRn) 16-8
16.3.5 UART Command Registers (UCRn) 16-9
16.3.6 UART Receiver Buffers (URBn) 16-10
16.3.7 UART Transmitter Buffers (UTBn) 16-11
16.3.8 UART Input Port Change Registers (UIPCRn) 16-11
16.3.9 UART Auxiliary Control Registers (UACRn) 16-12
16.3.10 UART Interrupt Status/Mask Registers (UISRn/UIMRn) 16-12
16.3.11 UART Divider Upper/Lower Registers (UDUn/UDLn) 16-14
16.3.12 UART Autobaud Registers (UABUn/UABLn) 16-14
16.3.13 UART Transmitter FIFO Registers (UTFn) 16-15
16.3.14 UART Receiver FIFO Registers (URFn) 16-16
16.3.15 UART Fractional Precision Divider Control Registers (UFPDn) 16-17
16.3.16 UART Input Port Registers (UIPn) 16-17
16.3.17 UART Output Port Command Registers (UOP1n/UOP0n) 16-18
16.4 UART Module Signal Definitions 16-18
16.5 Operation 16-19
16.5.1 Transmitter/Receiver Clock Source 16-19
16.5.1.1 Programmable Divider 16-20
16.5.1.2 Calculating Baud Rates 16-20
16.5.1.2.1 CLKIN Baud Rates 16-20
16.5.1.2.2 External Clock 16-21
16.5.1.2.3 Autobaud Detection 16-21
16.5.2 Transmitter and Receiver Operating Modes 16-22
16.5.2.1 Transmitting 16-22
16.5.2.2 Receiver 16-24
16.5.2.3 Transmitter FIFO 16-25
16.5.2.4 Receiver FIFO 16-25
16.5.3 Looping Modes 16-26
16.5.3.1 Automatic Echo Mode 16-27
16.5.3.2 Local Loop-Back Mode 16-27
16.5.3.3 Remote Loop-Back Mode 16-27
16.5.4 Multidrop Mode 16-28

Table of Contents (Continued)

Paragraph Number	Title	Page Number
16.5.5	Bus Operation	16-29
16.5.5.1	Read Cycles	16-29
16.5.5.2	Write Cycles	16-29
16.5.5.3	Interrupt Acknowledge Cycles	16-29
16.5.6	Programming	16-30
16.5.6.1	UART Module Initialization Sequence	16-30

Chapter 17
General Purpose I/O Module

17.1	Overview	17-1
17.2	Port Control Registers	17-2
17.2.1	Port A Control Register (PACNT)	17-3
17.2.2	Port B Control Register (PBCNT)	17-5
17.2.3	Port C Control Register	17-8
17.2.4	Port D Control Register (PDCNT)	17-8
17.3	Data Direction Registers	17-10
17.3.1	Port A Data Direction Register (PADDR)	17-10
17.3.2	Port B Data Direction Register (PBDDR)	17-10
17.3.3	Port C Data Direction Register (PCDDR)	17-11
17.4	Port Data Registers	17-11
17.4.1	Port Data Register (PxDAT)	17-11

Chapter 18
Pulse-Width Modulation (PWM) Module

18.1	Overview	18-1
18.2	PWM Operation	18-2
18.3	PWM Programming Model	18-2
18.3.1	PWM Control Register (PWCRn)	18-3
18.3.2	PWM Width Register (PWWDn)	18-4

Chapter 19
Signal Descriptions

19.1	MCF5272 Block Diagram with Signal Interfaces	19-1
19.2	Signal List	19-3
19.3	Address Bus (A[22:0]/SDA[13:0])	19-19
19.4	Data Bus (D[31:0])	19-19
19.4.1	Dynamic Data Bus Sizing	19-19
19.5	Chip Selects (CS7/SDCS, CS[6:0])	19-19
19.6	Bus Control Signals	19-20
19.6.1	Output Enable/Read (OE/RD)	19-20

Table of Contents (Continued)

Paragraph Number	Title	Page Number
19.6.2	Byte Strobes (BS[3:0])	19-20
19.6.3	Read/Write (R/W)	19-21
19.6.4	Transfer Acknowledge (TA/PB5)	19-22
19.6.5	Hi-Z	19-22
19.6.6	Bypass	19-22
19.6.7	SDRAM Row Address Strobe (RAS0)	19-22
19.6.8	SDRAM Column Address Strobe (CAS0)	19-22
19.6.9	SDRAM Clock (SDCLK)	19-22
19.6.10	SDRAM Write Enable (SDWE)	19-22
19.6.11	SDRAM Clock Enable (SDCLKE)	19-22
19.6.12	SDRAM Bank Selects (SDBA[1:0])	19-23
19.6.13	SDRAM Row Address 10 (A10)/A10 Precharge (A10_PRECHG)	19-23
19.7	CPU Clock and Reset Signals	19-23
19.7.1	$\overline{\text{RSTI}}$	19-23
19.7.2	$\overline{\text{DRESETEN}}$	19-23
19.7.3	CPU External Clock (CLKIN)	19-23
19.7.4	Reset Output (RSTO)	19-23
19.8	Interrupt Request Inputs (INT[6:1])	19-23
19.9	General-Purpose I/O (GPIO) Ports	19-24
19.10	UART0 Module Signals and PB[4:0]	19-24
19.10.1	Transmit Serial Data Output (URT0_TxD/PB0)	19-24
19.10.2	Receive Serial Data Input (URT0_RxD/PB1)	19-25
19.10.3	Clear-to-Send ($\overline{\text{URT0_CTS}}$/PB2)	19-25
19.10.4	Request to Send ($\overline{\text{URT0_RTS}}$/PB3)	19-25
19.10.5	Clock (URT0_CLK/PB4)	19-25
19.11	USB Module Signals and PA[6:0]	19-25
19.11.1	USB Transmit Serial Data Output (USB_TP/PA0)	19-25
19.11.2	USB Receive Serial Data Input (USB_RP/PA1)	19-25
19.11.3	USB Receive Data Negative (USB_RN/PA2)	19-25
19.11.4	USB Transmit Data Negative (USB_TN/PA3)	19-26
19.11.5	USB Suspend Driver (USB_SUSP/PA4)	19-26
19.11.6	USB Transmitter Output Enable (USB_TxEN/PA5)	19-26
19.11.7	USB Rx Data Output (USB_RxD/PA6)	19-26
19.11.8	USB_D+ and USB_D-	19-26
19.11.9	USB_CLK	19-26
19.11.10	INT1/USB Wake-on-Ring (USB_WOR)	19-26
19.12	Timer Module Signals	19-27
19.12.1	Timer Input 0 (TIN0)	19-27
19.12.2	Timer Output (TOUT0)/PB7	19-27
19.12.3	Timer Input 1 (TIN1)/PWM Mode Output 2 (PWM_OUT2)	19-27
19.12.4	Timer Output 1 (TOUT1)/PWM Mode Output 1 (PWM_OUT1)	19-27

Table of Contents (Continued)

Paragraph Number	Title	Page Number
19.13	Ethernet Module Signals	19-27
19.13.1	Transmit Clock (E_TxCLK)	19-27
19.13.2	Transmit Data (E_TxD0)	19-28
19.13.3	Collision (E_COL)	19-28
19.13.4	Receive Data Valid (E_RxDV)	19-28
19.13.5	Receive Clock (E_RxCLK)	19-28
19.13.6	Receive Data (E_RxD0)	19-28
19.13.7	Transmit Enable (E_TxEN)	19-28
19.13.8	Transmit Data (E_TxD[3:1]/PB[10:8])	19-28
19.13.9	Receive Data (E_RxD[3:1]/PB[13:11])	19-28
19.13.10	Receive Error (E_RxER/PB14)	19-29
19.13.11	Management Data Clock (E_MDC/PB15)	19-29
19.13.12	Management Data (E_MDIO)	19-29
19.13.13	Transmit Error (E_TxER)	19-29
19.13.14	Carrier Receive Sense (E_CRS)	19-29
19.14	PWM Module Signals (PWM_OUT0–PWM_OUT2])	19-29
19.15	Queued Serial Peripheral Interface (QSPI) Signals	19-29
19.15.1	QSPI Synchronous Serial Data Output (QSPI_Dout/WSEL)	19-30
19.15.2	QSPI Synchronous Serial Data Input (QSPI_Din)	19-30
19.15.3	QSPI Serial Clock (QSPI_CLK/BUSW1)	19-30
19.15.4	Synchronous Peripheral Chip Select 0 (QSPI_CS0/BUSW0)	19-30
19.15.5	Synchronous Peripheral Chip Select 1 (QSPI_CS1/PA11)	19-30
19.15.6	Synchronous Peripheral Chip Select 2 (QSPI_CS2/$\overline{\text{URT1_CTS}}$)	19-30
19.15.7	Synchronous Peripheral Chip Select 3 (PA7/DOUT3/QSPI_CS3)	19-30
19.16	Physical Layer Interface Controller TDM Ports and UART 1	19-31
19.16.1	GCI/IDL TDM Port 0.	19-31
19.16.1.1	Frame Sync (FSR0/FSC0/PA8)	19-31
19.16.1.2	D-Channel Grant (DGNT0/PA9)	19-31
19.16.1.3	Data Clock (DCL0/URT1_CLK)	19-31
19.16.1.4	Serial Data Input (DIN0/URT1_RxD)	19-31
19.16.1.5	UART1 CTS ($\overline{\text{URT1_CTS}}$/QSPI_CS2)	19-32
19.16.1.6	UART1 RTS ($\overline{\text{URT1_RTS}}$/INT5)	19-32
19.16.1.7	Serial Data Output (DOUT0/URT1_TxD)	19-32
19.16.1.8	D-Channel Request(DREQ0/PA10)	19-32
19.16.1.9	QSPI Chip Select 1 (QSPI_CS1/PA11)	19-32
19.16.2	GCI/IDL TDM Port 1	19-32
19.16.2.1	GCI/IDL Data Clock (DCL1/GDCL1_OUT)	19-32
19.16.2.2	GCI/IDL Data Out (DOUT1)	19-33
19.16.2.3	GCI/IDL Data In (DIN1)	19-33
19.16.2.4	GCI/IDL Frame Sync (FSC1/FSR1/DFSC1)	19-33
19.16.2.5	D-Channel Request (DREQ1/PA14)	19-33

Table of Contents (Continued)

Paragraph Number	Title	Page Number
19.16.2.6	D-Channel Grant (DGNT1_INT6/PA15_INT6)	19-33
19.16.3	GCI/IDL TDM Ports 2 and 3	19-34
19.16.3.1	GCI/IDL Delayed Frame Sync 2 (DFSC2/PA12)	19-34
19.16.3.2	GCI/IDL Delayed Frame Sync 3 (DFSC3/PA13)	19-34
19.16.3.3	QSPI_CS3, Port 3 GCI/IDL Data Out 3, PA7 (PA7/DOUT3/QSPI_CS3)	19-34
19.16.3.4	INT4 and Port 3 GCI/IDL Data In (INT4/DIN3)	19-35
19.17	JTAG Test Access Port and BDM Debug Port	19-35
19.17.1	Test Clock (TCK/PSTCLK)	19-35
19.17.2	Test Mode Select and Force Breakpoint (TMS/BKPT)	19-35
19.17.3	Test and Debug Data Out (TDO/DSO)	19-36
19.17.4	Test and Debug Data In (TDI/DSI)	19-36
19.17.5	JTAG TRST and BDM Data Clock (TRST/DSCLK)	19-36
19.17.6	Freescale Test Mode Select (MTMOD)	19-36
19.17.7	Debug Transfer Error Acknowledge (TEA)	19-36
19.17.8	Processor Status Outputs (PST[3:0])	19-36
19.17.9	Debug Data (DDATA[3:0])	19-37
19.17.10	Device Test Enable (TEST)	19-37
19.18	Operating Mode Configuration Pins	19-37
19.19	Power Supply Pins	19-38

Chapter 20
Bus Operation

20.1	Features	20-1
20.2	Bus and Control Signals	20-1
20.2.1	Address Bus (A[22:0])	20-2
20.2.2	Data Bus (D[31:0])	20-2
20.2.3	Read/Write (R/W)	20-2
20.2.4	Transfer Acknowledge (TA)	20-2
20.2.5	Transfer Error Acknowledge (TEA)	20-3
20.3	Bus Exception: Double Bus Fault	20-3
20.4	Bus Characteristics	20-3
20.5	Data Transfer Mechanism	20-4
20.5.1	Bus Sizing	20-4
20.6	External Bus Interface Types	20-7
20.6.1	Interface for FLASH/SRAM Devices with Byte Strobes	20-8
20.6.2	Interface for FLASH/SRAM Devices without Byte Strobes	20-12
20.7	Burst Data Transfers	20-17
20.8	Misaligned Operands	20-18
20.9	Interrupt Cycles	20-19
20.10	Bus Errors	20-19
20.11	Bus Arbitration	20-21

Table of Contents (Continued)

Paragraph Number	Title	Page Number
20.12	Reset Operation	20-21
20.12.1	Master Reset	20-22
20.12.2	Normal Reset	20-23
20.12.3	Software Watchdog Timer Reset Operation	20-24
20.12.4	Soft Reset Operation	20-25

Chapter 21
IEEE 1149.1 Test Access Port (JTAG)

21.1	Overview	21-1
21.2	JTAG Test Access Port and BDM Debug Port	21-2
21.3	TAP Controller	21-3
21.4	Boundary Scan Register	21-4
21.5	Instruction Register	21-7
21.6	Restrictions	21-8
21.7	Non-IEEE 1149.1 Operation	21-8

Chapter 22
Mechanical Data

22.1	Pinout	22-1
22.2	Package Dimensions	22-2

Chapter 23
Electrical Characteristics

23.1	Maximum Ratings	23-1
23.1.1	Supply, Input Voltage, and Storage Temperature	23-1
23.1.2	Operating Temperature	23-2
23.1.3	Resistance	23-2
23.2	DC Electrical Specifications	23-3
23.2.1	Output Driver Capability and Loading	23-3
23.3	AC Electrical Specifications	23-5
23.3.1	Clock Input and Output Timing Specifications	23-5
23.3.2	Processor Bus Input Timing Specifications	23-6
23.3.3	Processor Bus Output Timing Specifications	23-8
23.4	Debug AC Timing Specifications	23-13
23.5	SDRAM Interface Timing Specifications	23-14
23.6	Fast Ethernet AC Timing Specifications	23-17
23.6.1	MII Receive Signal Timing (E_RxD[3:0], E_RxDV, E_RxER, and E_RxCLK)	23-17
23.6.2	MII Transmit Signal Timing (E_TxD[3:0], E_TxEN, E_TxER, E_TxCLK)	23-18
23.6.3	MII Async Inputs Signal Timing (CRS and COL)	23-19
23.6.4	MII Serial Management Channel Timing (MDIO and MDC)	23-20

Table of Contents (Continued)

Paragraph Number	Title	Page Number
23.7	Timer Module AC Timing Specifications	23-21
23.8	UART Modules AC Timing Specifications	23-22
23.9	PLIC Module: IDL and GCI Interface Timing Specifications	23-23
23.10	General-Purpose I/O Port AC Timing Specifications	23-28
23.11	USB Interface AC Timing Specifications	23-29
23.12	IEEE 1149.1 (JTAG) AC Timing Specifications	23-30
23.13	QSPI Electrical Specifications	23-31
23.14	PWM Electrical Specifications	23-32

Appendix A
List of Memory Maps

A.1 List of Memory Map Tables A-1

Appendix B
Buffering and Impedance Matching

Index 1

List of Tables

Table Number	Title	Page Number
2-1	CCR Field Descriptions	2-6
2-2	MOVEC Register Map	2-7
2-3	Status Field Descriptions	2-8
2-4	Integer Data Formats	2-9
2-5	ColdFire Effective Addressing Modes	2-12
2-6	Notational Conventions	2-13
2-7	User-Mode Instruction Set Summary	2-15
2-8	Supervisor-Mode Instruction Set Summary	2-18
2-9	Misaligned Operand References	2-19
2-10	Move Byte and Word Execution Times	2-20
2-11	Move Long Execution Times	2-21
2-12	Move Execution Times	2-21
2-13	One-Operand Instruction Execution Times	2-22
2-14	Two-Operand Instruction Execution Times	2-22
2-15	Miscellaneous Instruction Execution Times	2-24
2-16	General Branch Instruction Execution Times	2-25
2-17	Bcc Instruction Execution Times	2-25
2-18	Exception Vector Assignments	2-26
2-19	Format Field Encoding	2-27
2-20	Fault Status Encodings	2-28
2-21	MCF5**272 Exceptions**	**2-28**
3-1	MAC Instruction Summary	3-4
4-1	Memory Map of Instruction Cache Registers	4-2
4-2	RAMBAR Field Description	4-3
4-3	Examples of Typical RAMBAR Settings	4-4
4-4	ROMBAR Field Description	4-6
4-5	Examples of Typical ROMBAR Settings	4-6
4-6	Instruction Cache Operation as Defined by CACR[CENB,CEIB]	4-11
4-7	Memory Map of Instruction Cache Registers	4-12
4-8	CACR Field Descriptions	4-13
4-9	ACRn Field Descriptions	4-14
5-1	Debug Module Signals	5-2
5-2	Processor Status Encoding	5-3
5-3	BDM/Breakpoint Registers	5-6
5-4	Rev. A Shared BDM/Breakpoint Hardware	5-7
5-5	AATR Field Descriptions	5-7
5-6	ABLR Field Description	5-9
5-7	ABHR Field Description	5-9
5-8	CSR Field Descriptions	5-10
5-9	DBR Field Descriptions	5-12

List of Tables (Continued)

Table Number	Title	Page Number
5-10	DBMR Field Descriptions	5-12
5-11	Access Size and Operand Data Location	5-12
5-12	PBR Field Descriptions	5-13
5-13	PBMR Field Descriptions	5-13
5-14	TDR Field Descriptions	5-14
5-15	Receive BDM Packet Field Description	5-18
5-16	Transmit BDM Packet Field Description	5-18
5-17	BDM Command Summary	5-19
5-18	BDM Field Descriptions	5-20
5-19	Control Register Map	5-30
5-20	Definition of DRc Encoding—Read	5-32
5-21	DDATA[3:0]/CSR[BSTAT] Breakpoint Response	5-34
5-22	PST/DDATA Specification for User-Mode Instructions	5-37
5-23	PST/DDATA Specification for Supervisor-Mode Instructions	5-40
6-1	SIM Registers	6-3
6-2	MBAR Field Descriptions	6-4
6-3	SCR Field Descriptions	6-5
6-4	SPR Field Descriptions	6-6
6-5	PMR Field Descriptions	6-8
6-6	USB and USART Power Down Modes	6-9
6-7	Exiting Sleep and Stop Modes	6-10
6-8	DIR Field Descriptions	6-11
6-9	WRRR Field Descriptions	6-12
6-10	WIRR Field Descriptions	6-13
6-11	WER Field Descriptions	6-13
7-1	Interrupt Controller Registers	7-2
7-2	Interrupt and Power Management Register Mnemonics	7-3
7-3	ICR Field Descriptions	7-4
7-4	ISR Field Descriptions	7-6
7-5	PITR Field Descriptions	7-7
7-6	PIWR Field Descriptions	7-8
7-7	PIVR Field Descriptions	7-9
7-8	MCF5272 Interrupt Vector Table	7-10
8-1	CSCR and CSOR Values after Reset	8-2
8-2	CSBRn Field Descriptions	8-3
8-3	Output Read/Write Strobe Levels versus Chip Select EBI Code	8-4
8-4	Chip Select Memory Address Decoding Priority	8-5
8-5	CSORn Field Descriptions	8-5
9-1	SDRAM Controller Signal Descriptions	9-2
9-2	Connecting BS[3:0] to DQMx	9-4
9-3	Configurations for 16-Bit Data Bus	9-4
9-4	Configurations for 32-Bit Data Bus	9-4
9-5	Internal Address Multiplexing (16-Bit Data Bus)	9-5
9-6	Internal Address Multiplexing (32-Bit Data Bus)	9-5

List of Tables (Continued)

Table Number	Title	Page Number
9-7	SDCR Field Descriptions	9-7
9-8	SDTR Field Descriptions	9-8
9-9	SDRAM Controller Performance, 32-Bit Port, (RCD = 0, RP = 1) or (RCD = 1, RP = 0)	9-10
9-10	SDRAM Controller Performance, 32–Bit Port, (RCD = 0, RP = 0)	9-10
9-11	SDRAM Controller Performance (RCD = 1, RP = 1), 16-Bit Port	9-11
9-12	SDRAM Controller Performance, 16-Bit Port, (RCD=0, RP=1) or (RCD=1, RP = 0)	9-11
9-13	SDRAM Controller Performance, 16-Bit Port, (RCD=0, RP=0)	9-12
10-1	DMA Data Transfer Matrix	10-1
10-2	DMR Field Descriptions	10-2
10-3	DIR Field Descriptions	10-4
11-1	MII Mode	11-3
11-2	Seven-Wire Mode Configuration	11-4
11-3	Ethernet Address Recognition	11-7
11-4	Transmission Errors	11-9
11-5	Reception Errors	11-9
11-6	FEC Register Memory Map	11-10
11-7	ECR Field Descriptions	11-11
11-8	EIR Field Descriptions	11-12
11-9	EIMR Register Field Descriptions	11-13
11-10	IVSR Field Descriptions	11-14
11-11	RDAR Register Field Descriptions	11-15
11-12	TDAR Field Descriptions	11-16
11-13	MMFR Field Descriptions	11-17
11-14	MSCR Field Descriptions	11-18
11-15	Programming Examples for MSCR Register	11-19
11-16	FRBR Field Descriptions	11-19
11-17	FRSR Field Descriptions	11-20
11-18	TFWR Field Descriptions	11-21
11-19	TFSR Field Descriptions	11-22
11-20	RCR Field Descriptions	11-23
11-21	MFLR Field Descriptions	11-24
11-22	TCR Field Descriptions	11-25
11-23	MALR Field Descriptions	11-26
11-24	MAUR Field Descriptions	11-27
11-25	HTUR Field Descriptions	11-28
11-26	HTLR Field Descriptions	11-29
11-27	ERDSR Field Descriptions	11-30
11-28	ETDSR Field Descriptions	11-31
11-29	EMRBR Field Descriptions	11-32
11-30	Hardware Initialization	11-33
11-31	ETHER_EN = 0	11-33
11-32	User Initialization Process (before ETHER_EN)	11-33
11-33	User Initialization (after ETHER_EN)	11-34

List of Tables (Continued)

Table Number	Title	Page Number
11-34	RxBD Field Descriptions	11-36
11-35	TxBD Field Descriptions	11-37
12-1	USB Device Requests	12-5
12-2	USB Memory Map	12-7
12-3	FNR Field Descriptions	12-9
12-4	FNMR Field Descriptions	12-9
12-5	RFMR Field Descriptions	12-10
12-6	RFMMR Field Descriptions	12-11
12-7	FAR Field Descriptions	12-11
12-8	ASR Field Descriptions	12-12
12-9	SPECR Field Descriptions	12-14
12-10	EP0SR Field Descriptions	12-14
12-11	IEP0CFG Field Descriptions	12-15
12-12	EP0CTL Field Descriptions	12-17
12-13	EPnCTL Field Descriptions	12-20
12-14	EP0IMR and EP0ISR Field Descriptions	12-22
12-15	EPnISR Field Descriptions	12-25
12-16	EPnIMR Field Descriptions	12-26
12-17	EPnDR Field Descriptions	12-27
12-18	EPnDPR Field Descriptions	12-28
12-19	USB FIFO Access Timing	12-30
12-20	Example FIFO Setup	12-32
13-1	PLIC Module Memory Map	13-13
13-2	P0CR–P3CR Field Descriptions	13-19
13-3	PLCR Field Description	13-20
13-4	P0ICR–P3ICR Field Descriptions	13-21
13-5	P0PSR–P3PSR Field Descriptions	13-22
13-6	PASR Field Descriptions	13-23
13-7	P0GMR–P3GMR Field Descriptions	13-24
13-8	P0GMT–P3GMT Field Descriptions	13-25
13-9	PGMTA Field Descriptions	13-26
13-10	PGMTS Field Descriptions	13-27
13-11	P0GCIR–P3GCIR Field Descriptions	13-28
13-12	P0GCIT–P3GCIT Field Descriptions	13-29
13-13	PGCITSR Field Descriptions	13-30
13-14	PDCSR Field Descriptions	13-31
13-15	PDRQR Field Descriptions	13-32
13-16	P0SDR–P3SDR Field Descriptions	13-33
13-17	PCSR Field Descriptions	13-34
14-1	QSPI Input and Output Signals and Functions	14-3
14-2	QSPI_CLK Frequency as Function of CPU Clock and Baud Rate	14-7
14-3	QMR Field Descriptions	14-9
14-4	QDLYR Field Descriptions	14-11
14-5	QWR Field Descriptions	14-12

List of Tables (Continued)

Table Number	Title	Page Number
14-6	QIR Field Descriptions	14-13
14-7	QCR0–QCR15 Field Descriptions	14-15
15-1	TMRn Field Descriptions	15-3
15-2	TERn Field Descriptions	15-5
16-1	UART Module Programming Model	16-3
16-2	UMR1n Field Descriptions	16-5
16-3	UMR2n Field Descriptions	16-6
16-4	USRn Field Descriptions	16-7
16-5	UCSRn Field Descriptions	16-8
16-6	UCRn Field Descriptions	16-9
16-7	UIPCRn Field Descriptions	16-11
16-8	UACRn Field Descriptions	16-12
16-9	UISRn/UIMRn Field Descriptions	16-13
16-10	UTFn Field Descriptions	16-15
16-11	URFn Field Descriptions	16-16
16-12	UFPDn Field Descriptions	16-17
16-13	UIPn Field Descriptions	16-17
16-14	UOP1/UOP0 Field Descriptions	16-18
16-15	UART Module Signals	16-19
16-16	Transmitter FIFO Status Bits	16-25
16-17	Receiver FIFO Status Bits	16-26
17-1	GPIO Signal Multiplexing	17-1
17-2	GPIO Port Register Memory Map	17-2
17-3	PACNT Field Descriptions	17-3
17-4	Port A Control Register Function Bits	17-5
17-5	PBCNT Field Descriptions	17-6
17-6	Port B Control Register Function Bits	17-7
17-7	PDCNT Field Descriptions	17-8
17-8	Port D Control Register Function Bits	17-9
17-9	PADDR Field Descriptions	17-10
18-1	PWM Module Memory Map	18-2
18-2	PWCRn Field Descriptions	18-3
18-3	PWWDn Field Descriptions	18-4
19-1	Signal Descriptions Sorted by Function	19-3
19-2	Signal Name and Description by Pin Number	19-11
19-3	Byte Strobe Operation for 32-Bit Data Bus	19-20
19-4	Byte Strobe Operation for 16-Bit Data Bus—SRAM Cycles	19-21
19-5	Byte Strobe Operation for 16-Bit Data Bus—SDRAM Cycles	19-21
19-6	Connecting BS[3:0] to DQMx	19-21
19-7	Processor Status Encoding	19-37
19-8	MCF5272 Bus Width Selection	19-38

List of Tables (Continued)

Table Number	Title	Page Number
19-9	MCF5272 CS0 Memory Bus Width Selection	19-38
19-10	MCF5272 High Impedance Mode Selection	19-38
20-1	ColdFire Bus Signal Summary	20-1
20-2	Chip Select Memory Address Decoding Priority	20-4
20-3	Byte Strobe Operation for 32-Bit Data Bus	20-6
20-4	Byte Strobe Operation for 16-Bit Data Bus—SRAM Cycles	20-6
20-5	Byte Strobe Operation for 16-Bit Data Bus—SDRAM Cycles	20-6
20-6	Data Bus Requirement for Read/Write Cycles	20-7
20-7	External Bus Interface Codes for CSBRs	20-8
21-1	JTAG Signals	21-2
21-2	Instructions	21-7
23-1	Maximum Supply, Input Voltage and Storage Temperature	23-1
23-2	Operating Temperature	23-2
23-3	Thermal Resistance	23-2
23-4	DC Electrical Specifications	23-3
23-5	I/O Driver Capability	23-3
23-6	Clock Input and Output Timing Specifications	23-5
23-7	Processor Bus Input Timing Specifications	23-6
23-8	Processor Bus Output Timing Specifications	23-8
23-9	Debug AC Timing Specification	23-13
23-10	SDRAM Interface Timing Specifications	23-14
23-11	MII Receive Signal Timing	23-17
23-12	MII Transmit Signal Timing	23-18
23-13	MII Async Inputs Signal Timing	23-19
23-14	MII Serial Management Channel Timing	23-20
23-15	Timer Module AC Timing Specifications	23-21
23-16	UART Modules AC Timing Specifications	23-22
23-17	IDL Master Mode Timing, PLIC Ports 1, 2, and 3	23-23
23-18	IDL Slave Mode Timing, PLIC Ports 0–3	23-24
23-19	GCI Slave Mode Timing, PLIC Ports 0–3	23-25
23-20	GCI Master Mode Timing, PLIC PORTs 1, 2, 3	23-26
23-21	General-Purpose I/O Port AC Timing Specifications	23-28
23-22	USB Interface AC Timing Specifications	23-29
23-23	IEEE 1149.1 (JTAG) AC Timing Specifications	23-30
23-24	QSPI Modules AC Timing Specifications	23-31
23-25	PWM Modules AC Timing Specifications	23-32
A-1	On-Chip Module Base Address Offsets from MBAR	A-1
A-2	CPU Space Registers Memory Map	A-2
A-3	On-Chip Peripherals and Configuration Registers Memory Map	A-2

List of Tables (Continued)

Table Number	Title	Page Number
A-4	Interrupt Control Register Memory Map	A-2
A-5	Chip Select Register Memory Map	A-3
A-6	GPIO Port Register Memory Map	A-3
A-7	QSPI Module Memory Map	A-4
A-8	PWM Module Memory Map	A-4
A-9	DMA Module Memory Map	A-4
A-10	UART0 Module Memory Map	A-5
A-11	UART1 Module Memory Map	A-6
A-12	SDRAM Controller Memory Map	A-7
A-13	Timer Module Memory Map	A-7
A-14	PLIC Module Memory Map	A-8
A-15	Ethernet Module Memory Map	A-9
A-16	USB Module Memory Map	A-10

MCF5272 ColdFire® Integrated Microprocessor
User's Manual

To provide the most up-to-date information, the revision of our documents on the World Wide Web will be the most current. Your printed copy may be an earlier revision. To verify you have the latest information available, refer to:

http://www.freescale.com/

The following revision history table summarizes changes contained in this document. For your convenience, the page number designators have been linked to the appropriate location.

Document Revision History

Rev. No.	Substantive Change(s)
2.1	Updated to meet Freescale identity guidelines.
3	• Formatting, layout, spelling, and grammar corrections. • Corrected the TxFIFO bit description In Table 16-9 (was "Once set, this bit is cleared by reading UTB*n*", is "After being set, this bit is cleared by writing UTB*n*"). • Corrected Figure 20-12 ($\overline{OE}$ signal was asserting on the third SDCLK clock cycle, is asserting on the second SDCLK clock cycle). • Corrected Figure 20-13 (R/$\overline{W}$ and $\overline{BS}$ signals were asserting on the third SDCLK clock cycle, are asserting on the second SDCLK clock cycle). • Corrected Figure 20-16 ($\overline{OE}$ signal was asserting on the third SDCLK clock cycle, is asserting on the second SDCLK clock cycle). • Corrected Figure 20-17 (R/$\overline{W}$ and $\overline{BS}$ signals were asserting on the third SDCLK clock cycle, are asserting on the second SDCLK clock cycle).

Freescale™ and the Freescale logo are trademarks of Freescale Semiconductor, Inc.

© Freescale Semiconductor, Inc., 2005. All rights reserved.

About This Book

The primary objective of this user's manual is to define the functionality of the MCF5272 processors for use by software and hardware developers.

The information in this book is subject to change without notice, as described in the disclaimers on the title page of this book. As with any technical documentation, it is the readers' responsibility to be sure he is using the most recent version of the documentation.

To locate any published errata or updates for this document, refer to the world-wide web at http://www.freescale.com.

Audience

This manual is intended for system software and hardware developers and applications programmers who want to develop products with the MCF5272. It is assumed that the reader understands operating systems, microprocessor system design, basic principles of software and hardware, and basic details of the ColdFire® architecture.

Organization

Following is a summary and brief description of the major sections of this manual:

- Chapter 1, "Overview," includes general descriptions of the modules and features incorporated in the MCF5272, focussing in particular on new features.
- Chapter 2, "ColdFire Core," provides an overview of the microprocessor core of the MCF5272. The chapter describes the organization of the Version 2 (V2) ColdFire 5200 processor core and an overview of the program-visible registers (the programming model) as they are implemented on the MCF5272. It also includes a full description of exception handling and a table of instruction timings.
- Chapter 3, "Hardware Multiply/Accumulate (MAC) Unit," describes the MCF5272 multiply/accumulate unit, which executes integer multiply, multiply-accumulate, and miscellaneous register instructions. The MAC is integrated into the operand execution pipeline (OEP).
- Chapter 4, "Local Memory." This chapter describes the MCF5272 implementation of the ColdFire V2 local memory specification. It consists of three major sections, as follows.
  - Section 4.3, "SRAM Overview," describes the MCF5272 on-chip static RAM (SRAM) implementation. It covers general operations, configuration, and initialization. It also provides information and examples of how to minimize power consumption when using the SRAM.
  - Section 4.4, "ROM Overview," describes the MCF5272 on-chip static ROM. The ROM module contains tabular data that the ColdFire core can access in a single cycle.
  - Section 4.5, "Instruction Cache Overview," describes the MCF5272 cache implementation, including organization, configuration, and coherency. It describes cache operations and how the cache interacts with other memory structures.

- Chapter 5, “Debug Support,” describes the Revision A hardware debug support in the MCF5272.
- Chapter 6, “System Integration Module (SIM),” describes the SIM programming model, bus arbitration, power management, and system-protection functions for the MCF5272.
- Chapter 7, “Interrupt Controller,” describes operation of the interrupt controller portion of the SIM. Includes descriptions of the registers in the interrupt controller memory map and the interrupt priority scheme.
- Chapter 8, “Chip Select Module,” describes the MCF5272 chip-select implementation, including the operation and programming model, which includes the chip-select address, mask, and control registers.
- Chapter 9, “SDRAM Controller,” describes configuration and operation of the synchronous DRAM controller component of the SIM, including a general description of signals involved in SDRAM operations. It provides interface information for memory configurations using most common SDRAM devices for both 16- and 32-bit-wide data buses. The chapter concludes with signal timing diagrams.
- Chapter 10, “DMA Controller,” provides an overview of the MCF5272’s one-channel DMA controller intended for memory-to-memory block data transfers. This chapter describes in detail its signals, registers, and operating modes.
- Chapter 11, “Ethernet Module,” describes the MCF5272 fast Ethernet media access controller (MAC). This chapter begins with a feature-set overview, a functional block diagram, and transceiver connection information for both MII and seven-wire serial interfaces. The chapter concludes with detailed descriptions of operation and the programming model.
- Chapter 12, “Universal Serial Bus (USB),” provides an overview of the USB module of the MCF5272, including detailed operation information and the USB programming model. Connection examples and circuit board layout considerations are also provided.
- The *USB Specification, Revision 1.1* is a recommended supplement to this chapter. It can be downloaded from http://www.usb.org. Chapter 2 of this specification, *Terms and Abbreviations*, provides definitions of many of the words found here.
- Chapter 13, “Physical Layer Interface Controller (PLIC),” provides detailed information about the MCF5272’s physical layer interface controller, a module intended to support ISDN applications. The chapter begins with a description of operation and a series of related block diagrams starting with a high-level overview. Each successive diagram depicts progressively more internal detail. The chapter then describes timing generation and the programming model and concludes with three application examples.
- Chapter 14, “Queued Serial Peripheral Interface (QSPI) Module,” provides a feature-set overview and description of operation, including details of the QSPI’s internal RAM organization. The chapter concludes with the programming model and a timing diagram.
- Chapter 15, “Timer Module,” describes configuration and operation of the four general-purpose timer modules, timer 0, 1, 2 and 3.
- Chapter 16, “UART Modules,” describes the use of the universal asynchronous/synchronous receiver/transmitters (UARTs) implemented on the MCF5272, including example register values for typical configurations.

- Chapter 17, “General Purpose I/O Module,” describes the operation and programming model of the three general purpose I/O (GPIO) ports on the MCF5272. The chapter details pin assignment, direction-control, and data registers.
- Chapter 18, “Pulse-Width Modulation (PWM) Module,” describes the configuration and operation of the pulse-width modulation (PWM) module. It includes a block diagram, programming model, and timing diagram.
- Chapter 19, “Signal Descriptions,” provides a listing and brief description of all the MCF5272 signals. Specifically, it shows which are inputs or outputs, how they are multiplexed, and the state of each signal at reset. The first listing is organized by function, with signals appearing alphabetically within each functional group. This is followed by a second listing sorted by pin number.
- Chapter 20, “Bus Operation,” describes the functioning of the bus for data-transfer operations, error conditions, bus arbitration, and reset operations. It includes detailed timing diagrams showing signal interaction. Operation of the bus is defined for transfers initiated by the MCF5272 as a bus master. The MCF5272 does not support external bus masters. Note that Chapter 9, “SDRAM Controller,” describes DRAM cycles.
- Chapter 21, “IEEE 1149.1 Test Access Port (JTAG),” describes configuration and operation of the MCF5272 Joint Test Action Group (JTAG) implementation. It describes those items required by the IEEE 1149.1 standard and provides additional information specific to the MCF5272. For internal details and sample applications, see the IEEE 1149.1 document.
- Chapter 22, “Mechanical Data,” provides a functional pin listing and package diagram for the MCF5272.
- Chapter 23, “Electrical Characteristics,” describes AC and DC electrical specifications and thermal characteristics for the MCF5272. Because additional speeds may have become available since the publication of this book, consult Freescale’s ColdFire web page, http://www.freescale.com, to confirm that this is the latest information.

This manual includes the following two appendixes:

- Appendix A, “List of Memory Maps,” provides the entire address-map for MCF5272 memory-mapped registers.
- Appendix B, “Buffering and Impedance Matching,” provides some suggestions regarding interface circuitry between the MCF5272 and SDRAMs.

This manual also includes an index.

Suggested Reading

This section lists additional reading that provides background for the information in this manual as well as general information about the ColdFire architecture.

General Information

The following documentation provides useful information about the ColdFire architecture and computer architecture in general:

ColdFire Documentation

The ColdFire documentation is available from the sources listed on the back cover of this manual. Document order numbers are included in parentheses for ease in ordering.

- *ColdFire Programmers Reference Manual, R1.0* (MCF5200PRM/AD)
- User's manuals—These books provide details about individual ColdFire implementations and are intended to be used in conjunction with *The ColdFire Programmers Reference Manual*. These include the following:
  - *ColdFire MCF5102 User's Manual* (MCF5102UM/AD)
  - *ColdFire MCF5202 User's Manual* (MCF5202UM/AD)
  - *ColdFire MCF5204 User's Manual* (MCF5204UM/AD)
  - *ColdFire MCF5206 User's Manual* (MCF5206EUM/AD)
  - *ColdFire MCF5206E User's Manual* (MCF5206EUM/AD)
  - ColdFire MCF5307 User's Manual (MCF5307UM/AD)
  - ColdFire MCF5407 User's Manual (MCF5407UM/AD)
- *ColdFire Programmers Reference Manual, R1.0* (MCF5200PRM/AD)
- *Using Microprocessors and Microcomputers: The Motorola Family*, William C. Wray, Ross Bannatyne, Joseph D. Greenfield

Additional literature on ColdFire implementations is being released as new processors become available. For a current list of ColdFire documentation, refer to the World Wide Web at http://www.freescale.com.

Conventions

This document uses the following notational conventions:

MNEMONICS	In text, instruction mnemonics are shown in uppercase.
`mnemonics`	In code and tables, instruction mnemonics are shown in lowercase.
italics	Italics indicate variable command parameters. Book titles in text are set in italics.
0x0	Prefix to denote hexadecimal number
0b0	Prefix to denote binary number
REG[FIELD]	Abbreviations for registers are shown in uppercase. Specific bits, fields, or ranges appear in brackets. For example, RAMBAR[BA] identifies the base address field in the RAM base address register.
nibble	A 4-bit data unit
byte	An 8-bit data unit
word	A 16-bit data unit[1]
longword	A 32-bit data unit
x	In some contexts, such as signal encodings, x indicates a don't care.
n	Used to express an undefined numerical value
¬	NOT logical operator
&	AND logical operator
|	OR logical operator

1. The only exceptions to this appear in the discussion of serial communication modules that support variable-length data transmission units. To simplify the discussion these units are referred to as words regardless of length.

Acronyms and Abbreviations

Table i lists acronyms and abbreviations used in this document.

Table i. Acronyms and Abbreviated Terms

Term	Meaning
ADC	Analog-to-digital conversion
ALU	Arithmetic logic unit
AVEC	Autovector
BDM	Background debug mode
BIST	Built-in self test
BSDL	Boundary-scan description language
CODEC	Code/decode
DAC	Digital-to-analog conversion
DMA	Direct memory access
DSP	Digital signal processing
EA	Effective address
EDO	Extended data output (DRAM)
FIFO	First-in, first-out
GPIO	General-purpose I/O
I^2C	Inter-integrated circuit
IEEE	Institute for Electrical and Electronics Engineers
IFP	Instruction fetch pipeline
IPL	Interrupt priority level
JEDEC	Joint Electron Device Engineering Council
JTAG	Joint Test Action Group
LIFO	Last-in, first-out
LRU	Least recently used
LSB	Least-significant byte
lsb	Least-significant bit
MAC	Multiply accumulate unit, also Media access controller
MBAR	Memory base address register
MSB	Most-significant byte
msb	Most-significant bit
Mux	Multiplex
NOP	No operation

Table i. Acronyms and Abbreviated Terms (continued)

Term	Meaning
OEP	Operand execution pipeline
PC	Program counter
PCLK	Processor clock
PLIC	Physical layer interface controller
PLL	Phase-locked loop
PLRU	Pseudo least recently used
POR	Power-on reset
PQFP	Plastic quad flat pack
PWM	Pulse-width modulation
QSPI	Queued serial peripheral interface
RISC	Reduced instruction set computing
Rx	Receive
SIM	System integration module
SOF	Start of frame
TAP	Test access port
TTL	Transistor transistor logic
Tx	Transmit
UART	Universal asynchronous/synchronous receiver transmitter
USB	Universal serial bus

Terminology Conventions

Table ii shows terminology conventions used throughout this document.

Table ii. Notational Conventions

Instruction	Operand Syntax
Opcode Wildcard	
cc	Logical condition (example: NE for not equal)
Register Specifications	
An	Any address register n (example: A3 is address register 3)
Ay,Ax	Source and destination address registers, respectively
Dn	Any data register n (example: D5 is data register 5)
Dy,Dx	Source and destination data registers, respectively
Rc	Any control register (example VBR is the vector base register)
Rm	MAC registers (ACC, MAC, MASK)
Rn	Any address or data register
Rw	Destination register w (used for MAC instructions only)
Ry,Rx	Any source and destination registers, respectively
Xi	index register i (can be an address or data register: Ai, Di)
Register Names	
ACC	MAC accumulator register
CCR	Condition code register (lower byte of SR)
MACSR	MAC status register
MASK	MAC mask register
PC	Program counter
SR	Status register
Port Name	
DDATA	Debug data port
PST	Processor status port
Miscellaneous Operands	
#<data>	Immediate data following the 16-bit operation word of the instruction
<ea>	Effective address

Table ii. Notational Conventions (continued)

Instruction	Operand Syntax
<ea>y,<ea>x	Source and destination effective addresses, respectively
<label>	Assembly language program label
<list>	List of registers for MOVEM instruction (example: D3–D0)
<shift>	Shift operation: shift left (<<), shift right (>>)
<size>	Operand data size: byte (B), word (W), longword (L)
bc	Both instruction and data caches
dc	Data cache
ic	Instruction cache
# <vector>	Identifies the 4-bit vector number for trap instructions
<>	identifies an indirect data address referencing memory
<xxx>	identifies an absolute address referencing memory
d*n*	Signal displacement value, *n* bits wide (example: d16 is a 16-bit displacement)
SF	Scale factor (x1, x2, x4 for indexed addressing mode, <<1n>> for MAC operations)
Operations	
+	Arithmetic addition or postincrement indicator
–	Arithmetic subtraction or predecrement indicator
x	Arithmetic multiplication
/	Arithmetic division
~	Invert; operand is logically complemented
&	Logical AND
|	Logical OR
^	Logical exclusive OR
<<	Shift left (example: D0 << 3 is shift D0 left 3 bits)
>>	Shift right (example: D0 >> 3 is shift D0 right 3 bits)
→	Source operand is moved to destination operand
←→	Two operands are exchanged
sign-extended	All bits of the upper portion are made equal to the high-order bit of the lower portion
If <condition> then <operations> else <operations>	Test the condition. If true, the operations after ‘then’ are performed. If the condition is false and the optional ‘else’ clause is present, the operations after ‘else’ are performed. If the condition is false and else is omitted, the instruction performs no operation. Refer to the Bcc instruction description as an example.

Table ii. Notational Conventions (continued)

Instruction	Operand Syntax
Subfields and Qualifiers	
{}	Optional operation
()	Identifies an indirect address
d_n	Displacement value, n-bits wide (example: d_{16} is a 16-bit displacement)
Address	Calculated effective address (pointer)
Bit	Bit selection (example: Bit 3 of D0)
lsb	Least significant bit (example: lsb of D0)
LSB	Least significant byte
LSW	Least significant word
msb	Most significant bit
MSB	Most significant byte
MSW	Most significant word
Condition Code Register Bit Names	
C	Carry
N	Negative
V	Overflow
X	Extend
Z	Zero

Register Identifiers

Register identifiers in this user's manual were changed from names used in early versions of the manual released under non-disclosure agreement (NDA). Because a significant amount of collateral documentation, such as source code, was developed using the old register names, Table iii through Table xvi list the new register names and mnemonics as they should appear in the data book, along with the old ones. Identifiers that have changed are displayed in boldface type. Those that have not changed are marked "no change" in the 'New Mnemonic' column.

Table iii. On-Chip Peripherals and Configuration Registers Memory Map

MBAR Offset	Register Name	Old Mnemonic	New Mnemonic
0x0000	Module Base Address Register, Read Only	MBAR	No change
0x0004	System Configuration Register	SCR	No change
0x0006	System Protection Register	SPR	No change
0x0008	Power Management Register	PMR	No change
0x000E	Activate Low Power Register	ALPR	No change
0x0010	Device Identification Register	DIR	No change

Table iv. Interrupt Control Register Memory Map

MBAR Offset	Register Name	Old Mnemonic	New Mnemonic
0x0020	Interrupt Control Register 1	ICR1	No change
0x0024	Interrupt Control Register 2	ICR2	No change
0x0028	Interrupt Control Register 3	ICR3	No change
0x002C	Interrupt Control Register 4	ICR4	No change
0x0030	Interrupt Source Register	ISR	No change
0x0034	Programmable Interrupt Transition Register	PITR	No change
0x0038	Programmable Interrupt Wakeup Register	PIWR	No change
0x003F	Programmable Interrupt Vector Register	PIVR	No change

Table v. Chip Select Register Memory Map

MBAR Offset	Register Name	Old Mnemonic	New Mnemonic
0x0040	CS Base Register 0	CSBR0	No change
0x0044	CS Option Register 0	CSOR0	No change
0x0048	CS Base Register 1	CSBR1	No change
0x004C	CS Option Register 1	CSOR1	No change

Table v. Chip Select Register Memory Map (continued)

MBAR Offset	Register Name	Old Mnemonic	New Mnemonic
0x0050	CS Base Register 2	CSBR2	No change
0x0054	CS Option Register 2	CSOR2	No change
0x0058	CS Base Register 3	CSBR3	No change
0x005C	CS Option Register 3	CSOR3	No change
0x0060	CS Base Register 4	CSBR4	No change
0x0064	CS Option Register 4	CSOR4	No change
0x0068	CS Base Register 5	CSBR5	No change
0x006C	CS Option Register 5	CSOR5	No change
0x0070	CS Base Register 6	CSBR6	No change
0x0074	CS Option Register 6	CSOR6	No change
0x0078	CS Base Register 7	CSBR7	No change
0x007C	CS Option Register 7	CSOR7	No change

Table vi. GPIO Port Register Memory Map

MBAR Offset	Register Name	Old Mnemonic	New Mnemonic
0x0080	Port A Control Register	PACNT	No change
0x0084	Port A Data Direction Register	PADDR	No change
0x0086	Port A Data Register	PADAT	No change
0x0088	Port B Control Register	PBCNT	No change
0x008C	Port B Data Direction Register	PBDDR	No change
0x008E	Port B Data Register	PBDAT	No change
0x0094	Port C Data Direction Register	PCDDR	No change
0x0096	Port C Data Register	PCDAT	No change
0x0098	Port D Control Register	PDCNT	No change

Table vii. QSPI Module Memory Map

MBAR Offset	Register Name	Old Mnemonic	New Mnemonic
0x00A0	QSPI Mode Register	SPMODE	**QMR**
0x00A4	QSPI Delay Register	SPDELAY	**QDLYR**
0x00A8	QSPI Wrap Register	SPWRAP	**QWR**

Table vii. QSPI Module Memory Map (continued)

MBAR Offset	Register Name	Old Mnemonic	New Mnemonic
0x00AC	QSPI Interrupt Register	SPINT	**QIR**
0x00B0	QSPI Address Register	SPADDR	**QAR**
0x00B4	QSPI Data Register	SPDATA	**QDR**

Table viii. PWM Module Memory Map

MBAR Offset	Register Name	Old Mnemonic	New Mnemonic
0x00C0	**PWM Control Register 0**	PWMCR1	**PWCR0**
0x00C4	**PWM Control Register 1**	PWMCR2	**PWCR1**
0x00C8	**PWM Control Register 2**	PWMCR3	**PWCR2**
0x00D0	**PWM Pulse-Width Register 0**	PWMWD1	**PWWD0**
0x00D4	**PWM Pulse-Width Register 1**	PWMWD2	**PWWD1**
0x00D8	**PWM Pulse-Width Register 2**	PWMWD3	**PWWD2**

Table ix. DMA Module Memory Map

MBAR Offset	Register Name	Old Mnemonic	New Mnemonic
0x00E0	DMA Mode Register	DCMR	No change
0x00E6	DMA Interrupt Register	DCIR	No change
0x00E8	DMA Byte Count Register	DBCR	No change
0x00EC	DMA Source Address Register	DSAR	No change
0x00F0	DMA Destination Address Register	DDAR	No change

Table x. UART0 Module Memory Map

MBAR Offset	Register Name	Old Mnemonic	New Mnemonic
0x0100	UART0 Mode Register 1/2	U1MR1/U1MR2	**U0MR1/U0MR2**
0x0104	UART0 Status	U1SR	**U0SR**
0x0104	UART0 Clock Select Register	U1CSR	**U0CSR**
0x0108	UART0 Command Register	U1CR	**U0CR**
0x010C	UART0 Receive Buffer	U1RxB	**U0RxB**
0x010C	UART0 Transmit Buffer	U1TxB	**U0TxB**

Table x. UART0 Module Memory Map (continued)

MBAR Offset	Register Name	Old Mnemonic	New Mnemonic
0x0110	UART0 CTS Change Register	U1CCR	**U0CCR**
0x0110	UART0 Auxiliary Control Register	U1ACR	**U0ACR**
0x0114	UART0 Interrupt Status Register	U1ISR	**U0ISR**
0x0114	UART0 Interrupt Mask Register	U1IMR	**U0IMR**
0x0118	UART0 Baud Prescaler MSB	U1BG1	**U0BG1**
0x011C	UART0 Baud Prescaler LSB	U1BG2	**U0BG2**
0x0120	UART0 AutoBaud MSB Register	U1ABR1	**U0ABR1**
0x0124	UART0 AutoBaud LSB Register	U1ABR2	**U0ABR2**
0x0128	UART0 TxFIFO Control/Status Register	U1TxFCSR	**U0TxFCSR**
0x012C	UART0 RxFIFO Control/Status Register	U1RxFCSR	**U0RxFCSR**
0x0134	UART0 CTS Unlatched Input	U1IP	**U0IP**
0x0138	UART0 RTS O/P Bit Set Command Register	U1OP1	**U0OP1**
0x013C	UART0 RTS O/P Bit Reset Command Register	U1OP0	**U0OP0**

Table xi. UART1 Module Memory Map

MBAR Offset	Register Name	Old Mnemonic	New Mnemonic
0x0140	UART1 Mode Register 1/2	U2MR1/U2MR2	**U1MR1/U1MR2**
0x0144	UART1 Status	U2SR	**U1SR**
0x0144	UART1 Clock Select Register	U2CSR	**U1CSR**
0x0148	UART1 Command Register	U2CR	**U1CR**
0x014C	UART1 Receive Buffer	U2RxB	**U1RxB**
0x014C	UART1 Transmit Buffer	U2TxB	**U1TxB**
0x0150	UART1 CTS Change Register	U2CCR	**U1CCR**
0x0150	UART1 Auxiliary Control Register	U2ACR	**U1ACR**
0x0154	UART1 Interrupt Status Register	U2ISR	**U1ISR**
0x0154	UART1 Interrupt Mask Register	U2IMR	**U1IMR**
0x0158	UART1 Baud Prescaler MSB	U2BG1	**U1BG1**
0x015C	UART1 Baud Prescaler LSB	U2BG2	**U1BG2**
0x0160	UART1 AutoBaud MSB Register	U2ABR1	**U1ABR1**
0x0164	UART1 AutoBaud LSB Register	U2ABR2	**U1ABR2**
0x0168	UART1 TxFIFO Control/Status Register	U2TxFCSR	**U1TxFCSR**

Table xi. UART1 Module Memory Map (continued)

MBAR Offset	Register Name	Old Mnemonic	New Mnemonic
0x016C	UART1 RxFIFO Control/Status Register	U2RxFCSR	**U1RxFCSR**
0x0174	UART1 CTS Unlatched Input	U2IP	**U1IP**
0x0178	UART1 RTS O/P Bit Set Command Register	U2OP1	**U1OP1**
0x017C	UART1 RTS O/P Bit Reset Command Register	U2OP0	**U1OP0**

Table xii. SDRAM Controller Memory Map

MBAR Offset	Register Name	Old Mnemonic	New Mnemonic
0x0182	SDRAM Configuration Register	SDCCR	**SDCR**
0x0186	SDRAM Timing Register	SDCTR	**SDTR**

Table xiii. Timer Module Memory Map

MBAR Offset	Register Name	Old Mnemonic	New Mnemonic
0x0200	Timer 0 Mode Register	TMR1	**TMR0**
0x0204	Timer 0 Reference Register	TRR1	**TRR0**
0x0208	Timer 0 Capture Register	TCR1	**TCAP0**
0x020C	Timer 0 Counter Register	TCN1	**TCN0**
0x0210	Timer 0 Event Register	TER1	**TER0**
0x0220	Timer 1 Mode Register	TMR2	**TMR1**
0x0224	Timer 1 Reference Register	TRR2	**TRR1**
0x0228	Timer 1 Capture Register	TCR2	**TCAP1**
0x022C	Timer 1 Counter Register	TCN2	**TCN1**
0x0230	Timer 1 Event Register	TER2	**TER1**
0x0240	Timer 2 Mode Register	TMR3	**TMR2**
0x0244	Timer 2 Reference Register	TRR3	**TRR2**
0x0248	Timer 2 Capture Register	TCR3	**TCAP2**
0x024C	Timer 2 Counter Register	TCN3	**TCN2**
0x0250	Timer 2 Event Register	TER3	**TER2**
0x0260	Timer 3 Mode Register	TMR4	**TMR3**
0x0264	Timer 3 Reference Register	TRR4	**TRR3**
0x0268	Timer 3 Capture Register	TCR4	**TCAP3**

Table xiii. Timer Module Memory Map (continued)

MBAR Offset	Register Name	Old Mnemonic	New Mnemonic
0x026C	Timer 3 Counter Register	TCN4	**TCN3**
0x0270	Timer 3 Event Register	TER4	**TER3**
0x0280	Watchdog Reset Reference Register	WRRR	No change
0x0284	Watchdog Interrupt Reference Register	WIRR	No change
0x0288	Watchdog Counter Register	WCR	No change
0x028C	Watchdog Event Register	WER	No change

Table xiv. PLIC Module Memory Map

MBAR Offset	Register Name	Old Mnemonic	New Mnemonic
0x0300	Port0 B1 Data Receive	PLRB10	**P0B1RR**
0x0304	Port1 B1 Data Receive	PLRB11	**P1B1RR**
0x0308	Port2 B1 Data Receive	PLRB12	**P2B1RR**
0x030C	Port3 B1 Data Receive	PLRB13	**P3B1RR**
0x0310	Port0 B2 Data Receive	PLRB20	**P0B2RR**
0x0314	Port1 B2 Data Receive	PLRB21	**P1B2RR**
0x0318	Port2 B2 Data Receive	PLRB22	**P2B2RR**
0x031C	Port3 B2 Data Receive	PLRB23	**P3B2RR**
0x0320	Port0-3 D Data Receive	PLRD0 PLRD1 PLRD2 PLRD3	**P0DRR** **P1DRR** **P2DRR** **P3DRR**
0x0328	Port0 B1 Data Transmit	PLTB10	**P0B1TR**
0x032C	Port1 B1 Data Transmit	PLTB11	**P1B1TR**
0x0330	Port2 B1 Data Transmit	PLTB12	**P2B1TR**
0x0334	Port3 B1 Data Transmit	PLTB13	**P3B1TR**
0x0338	Port0 B2 Data Transmit	PLTB20	**P0B2TR**
0x033C	Port1 B2 Data Transmit	PLTB21	**P1B2TR**
0x0340	Port2 B2 Data Transmit	PLTB22	**P2B2TR**
0x0344	Port3 B2 Data Transmit	PLTB23	**P3B2TR**
0x0348	Port0-3 D Data Transmit	PLTD0 PLTD1 PLTD2 PLTD3	**P0DTR** **P1DTR** **P2DTR** **P3DTR**

Table xiv. PLIC Module Memory Map (continued)

MBAR Offset	Register Name	Old Mnemonic	New Mnemonic
0x0350	Port0-1 GCI/IDL Configuration Register	PLCR0 PLCR1	**P0CR** **P1CR**
0x0354	Port2-3 GCI/IDL Configuration Register	PLCR2 PLCR3	**P2CR** **P3CR**
0x0358	Port0-1 Interrupt Configuration Register	PLICR0 PLICR1	**P0ICR** **P1ICR**
0x035C	Port2-3 Interrupt Configuration Register	PLICR2 PLICR3	**P2ICR** **P3ICR**
0x0360	Port0-1 GCI Monitor RX	PLGMR0 PLGMR1	**P0GMR** **P1GMR**
0x0364	Port2-3 GCI Monitor RX	PLGMR2 PLGMR3	**P2GMR** **P3GMR**
0x0368	Port0-1 GCI Monitor TX	PLGMT0 PLGMT1	**P0GMT** **P1GMT**
0x036C	Port2-3 GCI Monitor TX	PLGMT2 PLGMT3	**P2GMT** **P3GMT**
0x0370	GCI Monitor TX Status GCI Monitor TX abort	PLGMTS PLGMTA	**PGMTS** **PGMTA**
0x0374	Port0-3 GCI C/I RX	PLGCIR0 PLGCIR1 PLGCIR2 PLGCIR3	**P0GCIR** **P1GCIR** **P2GCIR** **P3GCIR**
0x0378	Port0-3 GCI C/I TX	PLGCIT0 PLGCIT1 PLGCIT2 PLGCIT3	**P0GCIT** **P1GCIT** **P2GCIT** **P3GCIT**
0x037C	GCI C/I TX Status	PGCITSR	No change
0x0384	Port0-1 Periodic Status	PLPSR0 PLPSR1	**P0PSR** **P1PSR**
0x0388	Port2-3 Periodic Status	PLPSR2 PLPSR3	**P2PSR** **P3PSR**
0x038C	Aperiodic Interrupt Status Register; Loop back Control	PLASR PLLCR	**PASR** **PLCR**
0x0392	D Channel Request	PLDRQ	**PDRQR**
0x0394	Port0-1 Sync Delay	PLSD0 PLSD1	**P0SDR** **P1SDR**
0x0398	Port2-3 Sync Delay	PLSD2 PLSD3	**P2SDR** **P3SDR**
0x039C	Clock Select	PLCKSEL	**PCSR**

Table xv. Ethernet Module Memory Map

MBAR Offset	Register Name	Old Mnemonic	New Mnemonic
0x0840	Ethernet Control Register	ECNTRL	**ECR**
0x0844	Ethernet Interrupt Event Register	IEVENT	**EIR**
0x0848	Ethernet Interrupt Mask Register	IMASK	**EIMR**
0x084C	Ethernet Interrupt Vector Status	IVEC	**IVSR**
0x0850	Ethernet Rx Ring Updated Flag	R_DES_ACTIVE	**RDAR**
0x0854	Ethernet Tx Ring Updated Flag	X_DES_ACTIVE	**TDAR**
0x0880	Ethernet MII Data Register	MII_DATA	**MMFR**
0x0884	Ethernet MII Speed Register	MII_SPEED	**MSCR**
0x08CC	Ethernet Receive Bound Register	R_BOUND	**FRBR**
0x08D0	Ethernet Rx FIFO Start Address	R_FSTART	**FRSR**
0x08E4	Transmit FIFO Watermark	X_WMRK	**TFWR**
0x08EC	Ethernet Tx FIFO Start Address	X_FSTART	**TFSR**
0x0944	Ethernet Rx Control Register	R_CNTRL	**RCR**
0x0948	Maximum Frame Length Register	MAX_FRM_LEN	**MFLR**
0x0984	Ethernet Tx Control Register	X_CNTRL	**TCR**
0x0C00	Ethernet Address (Lower)	ADDR_LOW	**MALR**
0x0C04	Ethernet Address (Upper)	ADDR_HIGH	**MAUR**
0x0C08	Ethernet Hash Table (Upper)	HASH_TABLE_HIGH	**HTUR**
0x0C0C	Ethernet Hash Table (Lower)	HASH_TABLE_LOW	**HTLR**
0x0C10	Ethernet Rx Descriptor Ring	R_DES_START	**ERDSR**
0x0C14	Ethernet Tx Descriptor Rin	X_DES_START	**ETDSR**
0x0C18	Ethernet Rx Buffer Size	R_BUFF_SIZE	**EMRBR**
0x0C40–0x0DFF	FIFO RAM	E_FIFO	**EFIFO**

Table xvi. USB Module Memory Map

MBAR Offset	Register Name	Old Mnemonic	New Mnemonic
0x1002	USB Frame Number Register	USBFNR	**FNR**
0x1006	USB Frame Number Match Register	USBFNMR	**FNMR**
0x100A	USB Real-time Frame Monitor Register	USBRTFMR	**RFMR**
0x100E	USB Real-time Frame Monitor Match Register	USBRTFMMR	**RFMMR**

Table xvi. USB Module Memory Map (continued)

MBAR Offset	Register Name	Old Mnemonic	New Mnemonic
0x1013	USB Function Address Register	USBFAR	**FAR**
0x1014	USB Alternate Setting Register	USBASR	**ASR**
0x1018	USB Device Request Data1 Register	USBDRR1	**DRR1**
0x101C	USB Device Request Data2 Register	USBDRR2	**DRR2**
0x1022	USB Specification Number Register	USBSPECR	**SPECR**
0x1026	USB Endpoint 0 Status Register	USBEPSR0	**EP0SR**
0x1028	USB Endpoint 0 IN Config Register	USBEPICFG0	**IEP0CFG**
0x102C	USB Endpoint 0 OUT Config Register	USBEPOCFG0	**OEP0CFG**
0x1030	USB Endpoint 1 Configuration Register	USBEPCFG1	**EP1CFG**
0x1034	USB Endpoint 2 Configuration Register	USBEPCFG2	**EP2CFG**
0x1038	USB Endpoint 3 Configuration Register	USBEPCFG3	**EP3CFG**
0x103C	USB Endpoint 4 Configuration Register	USBEPCFG4	**EP4CFG**
0x1040	USB Endpoint 5 Configuration Register	USBEPCFG5	**EP5CFG**
0x1044	USB Endpoint 6 Configuration Register	USBEPCFG6	**EP6CFG**
0x1048	USB Endpoint 7 Configuration Register	USBEPCFG7	**EP7CFG**
0x104C	USB Endpoint 0 Control Register	USBEPCTL0	**EP0CTL**
0x1052	USB Endpoint 1 Control Register	USBEPCTL1	**EP1CTL**
0x1056	USB Endpoint 2 Control Register	USBEPCTL2	**EP2CTL**
0x105A	USB Endpoint 3 Control Register	USBEPCTL3	**EP3CTL**
0x105E	USB Endpoint 4 Control Register	USBEPCTL4	**EP4CTL**
0x1062	USB Endpoint 5 Control Register	USBEPCTL5	**EP5CTL**
0x1066	USB Endpoint 6 Control Register	USBEPCTL6	**EP6CTL**
0x106A	USB Endpoint 7 Control Register	USBEPCTL7	**EP7CTL**
0x106C	USB General/Endpoint 0 Interrupt Status Register	USBEPISR0	**EP0ISR**
0x1072	USB Endpoint 1 Interrupt Status Register	USBEPISR1	**EP1ISR**
0x1076	USB Endpoint 2 Interrupt Status Register	USBEPISR2	**EP2ISR**
0x107A	USB Endpoint 3 Interrupt Status Register	USBEPISR3	**EP3ISR**
0x107E	USB Endpoint 4 Interrupt Status Register	USBEPISR4	**EP4ISR**
0x1082	USB Endpoint 5 Interrupt Status Register	USBEPISR5	**EP5ISR**
0x1086	USB Endpoint 6 Interrupt Status Register	USBEPISR6	**EP6ISR**
0x108A	USB Endpoint 7 Interrupt Status Register	USBEPISR7	**EP7ISR**
0x108C	USB Endpoint 0 Interrupt Mask Register	USBEPIMR0	**EP0IMR**

Table xvi. USB Module Memory Map (continued)

MBAR Offset	Register Name	Old Mnemonic	New Mnemonic
0x1092	USB Endpoint 1 Interrupt Mask Register	USBEPIMR1	**EP1IMR**
0x1096	USB Endpoint 2 Interrupt Mask Register	USBEPIMR2	**EP2IMR**
0x109A	USB Endpoint 3 Interrupt Mask Register	USBEPIMR3	**EP3IMR**
0x109E	USB Endpoint 4 Interrupt Mask Register	USBEPIMR4	**EP4IMR**
0x10A2	USB Endpoint 5 Interrupt Mask Register	USBEPIMR5	**EP5IMR**
0x10A6	USB Endpoint 6 Interrupt Mask Register	USBEPIMR6	**EP6IMR**
0x10AA	USB Endpoint 7 Interrupt Mask Register	USBEPIMR7	**EP7IMR**
0x10AC	USB Endpoint 0 Data Register	USBEPDAT0	**EP0DR**
0x10B0	USB Endpoint 1 Data Register	USBEPDAT1	**EP1DR**
0x10B4	USB Endpoint 2 Data Register	USBEPDAT2	**EP2DR**
0x10B8	USB Endpoint 3 Data Register	USBEPDAT3	**EP3DR**
0x10BC	USB Endpoint 4 Data Register	USBEPDAT4	**EP4DR**
0x10C0	USB Endpoint 5 Data Register	USBEPDAT5	**EP5DR**
0x10C4	USB Endpoint 6 Data Register	USBEPDAT6	**EP6DR**
0x10C8	USB Endpoint 7 Data Register	USBEPDAT7	**EP7DR**
0x10CE	USB Endpoint 0 Data Present Register	USBEPDP0	**EP0DPR**
0x10D2	USB Endpoint 1 Data Present Register	USBEPDP1	**EP1DPR**
0x10D6	USB Endpoint 2 Data Present Register	USBEPDP2	**EP2DPR**
0x10DA	USB Endpoint 3 Data Present Register	USBEPDP3	**EP3DPR**
0x10DE	USB Endpoint 4 Data Present Register	USBEPDP4	**EP4DPR**
0x10E2	USB Endpoint 5 Data Present Register	USBEPDP5	**EP5DPR**
0x10E6	USB Endpoint 6 Data Present Register	USBEPDP6	**EP6DPR**
0x10EA	USB Endpoint 7 Data Present Register	USBEPDP7	**EP7DPR**
0x1400–0x17FF	USB Configuration RAM, 1 K Bytes	USB_CFG_RAM	No change

NOTE

The MBAR Offset column corresponds to the tables found in Appendix A, "List of Memory Maps." 16- and/or 8-bit wide registers may be offset by 0, 1, 2, or 3 bytes from the offset address shown above. Refer to the appropriate discussions in this document for actual positioning of 16- or 8-bit registers in a 32-bit long word.

Chapter 1
Overview

This chapter provides an overview of the MCF5272 microprocessor features, including the major functional components.

1.1 MCF5272 Key Features

A block diagram of the MCF5272 is shown in Figure 1-1. The main features are as follows:

- Static Version 2 ColdFire variable-length RISC processor
  - 32-bit address and data path on-chip
  - 66-MHz processor core and bus frequency
  - Sixteen general-purpose 32-bit data and address registers
  - Multiply-accumulate unit (MAC) for DSP and fast multiply operations
- On-chip memories
  - 4-Kbyte SRAM on CPU internal bus
  - 16-Kbyte ROM on CPU internal bus
  - 1-Kbyte instruction cache
- Power management
  - Fully-static operation with processor sleep and whole-chip stop modes
  - Very rapid response to interrupts from the low-power sleep mode (wake-up feature)
  - Clock enable/disable for each peripheral when not used
  - Software-controlled disable of external clock input for virtually zero power consumption (low-power stop mode)
- Two universal asynchronous/synchronous receiver transmitters (UARTs)
  - Full-duplex operation
  - Based on MC68681 dual-UART (DUART) programming model
  - Flexible baud rate generator
  - Modem control signals available ($\overline{\text{CTS}}$ and $\overline{\text{RTS}}$)
  - Processor interrupt and wakeup capability
  - Enhanced Tx, Rx FIFOs, 24 bytes each

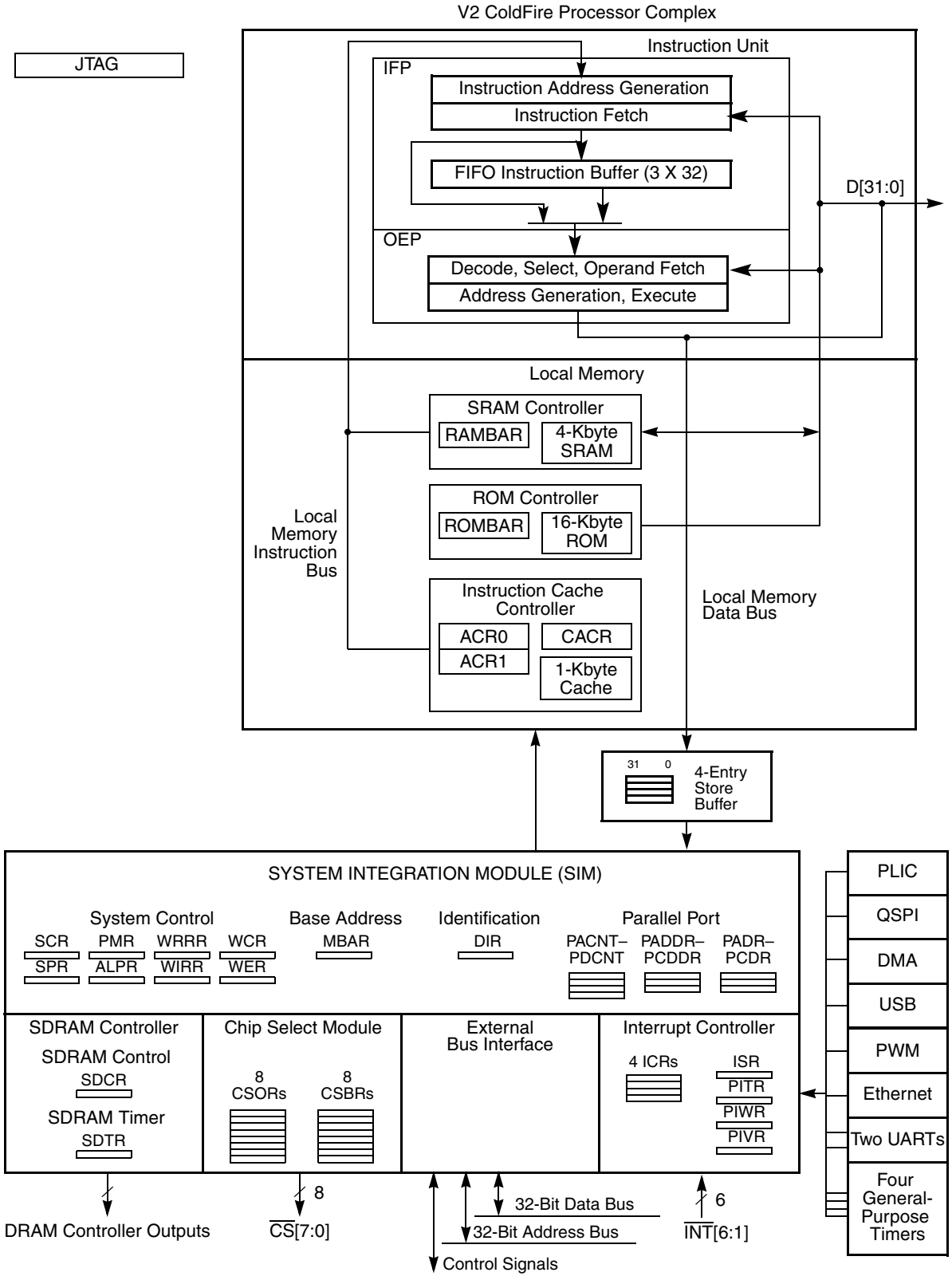

Figure 1-1. MCF5272 Block Diagram

- Ethernet Module
  - 10 baseT capability, half or full duplex
  - 100 baseT capability, half duplex and limited throughput full duplex (MCF5272)
  - On-chip transmit and receive FIFOs
  - Off-chip flexible buffer descriptor rings
  - Media-independent interface (MII)
- Universal serial bus (USB) module
  - 12 Mbps (full speed)
  - Fully compatible with USB 1.1 specifications
  - Eight endpoints (control, bulk, interrupt Rx, isochronous)
  - Endpoint FIFOs
  - Selectable on-chip analog interface
- External memory interface
  - External glueless 8, 16, and 32-bit SRAM and ROM interface bus
  - SDRAM controller supports 16–256 Mbit devices
  - External bus configurable for 16 or 32 bits width for SDRAM
  - Glueless interface to SRAM devices with or without byte strobe inputs
  - Programmable wait state generator
- Queued serial peripheral interface (QSPI)
  - Full-duplex, three-wire synchronous transfer
  - Up to four chip selects available
  - Master operation
  - Programmable master bit rates
  - Up to 16 preprogrammed transfers
- Timer module
  - 4x16-bit general-purpose multi-mode timer
    - Input capture and output compare pins for timers 1 and 2
    - Programmable prescaler
  - 15-nS resolution at 66-MHz clock frequency
  - Software watchdog timer
  - Software watchdog can generate interrupt before reset
  - Processor interrupt for each timer
- Pulse-width modulation (PWM) unit
  - Three identical channels
  - Independent prescaler TAP point
  - Period/duty range variable

- System integration module (SIM)
  - System configuration including internal and external address mapping
  - System protection by hardware watchdog
  - Versatile programmable chip-select signals with wait-state generation logic
  - Up to three 16-bit parallel input/output ports
  - Latchable interrupt inputs with programmable priority and edge triggering
  - Programmable interrupt vectors for on-chip peripherals
- Physical layer interface controller (PLIC)
  - Allows connection using general circuit interface (GCI) or interchip digital link (IDL) physical layer protocols for 2B + D data
  - Three physical interfaces
  - Four time-division multiplex (TDM) ports
- IEEE 1149.1 boundary-scan test access port (JTAG) for board-level testing
- Operating voltage: 3.3 V ±0.3 V
- Operating temperature: 0 –70°C
- Operating frequency: DC to 66 MHz, from external CMOS oscillator
- Compact ultra low-profile 196 ball-molded plastic ball-grid array package (PGBA)

1.2 MCF5272 Architecture

This section briefly describes the MCF5272 core, SIM, UART, and timer modules, and test access port.

1.2.1 Version 2 ColdFire Core

Based on the concept of variable-length RISC technology, ColdFire combines the simplicity of conventional 32-bit RISC architectures with a memory-saving, variable-length instruction set. The main features of the MCF5272 core are as follows:

- 32-bit address bus directly addresses up to 4 Gbytes of address space
- 32-bit data bus
- Variable-length RISC
- Optimized instruction set for high-level language constructs
- Sixteen general-purpose 32-bit data and address registers
- MAC unit for DSP applications
- Supervisor/user modes for system protection
- Vector base register to relocate exception-vector table
- Special core interfacing signals for integrated memories
- Full debug support

The Version 2 ColdFire core has a 32-bit address bus and a 32-bit data bus. The address bus allows direct addressing of up to 4 Gbytes. It supports misaligned data accesses and a bus arbitration unit for multiple bus masters.

The Version 2 ColdFire supports an enhanced subset of the 68000 instruction set. The MAC provides new instructions for DSP applications; otherwise, Version 2 ColdFire user code runs unchanged on 68020, 68030, 68040, and 68060 processors. The removed instructions include BCD, bit field, logical rotate, decrement and branch, integer division, and integer multiply with a 64-bit result. Also, four indirect addressing modes have been eliminated.

The ColdFire 2 core incorporates a complete debug module that provides real-time trace, background debug mode, and real-time debug support.

1.2.2 System Integration Module (SIM)

The MCF5272 SIM provides the external bus interface for the ColdFire 2 architecture. It also eliminates most or all of the glue logic that typically supports the microprocessor and its interface with the peripheral and memory system. The SIM provides programmable circuits to perform address-decoding and chip selects, wait-state insertion, interrupt handling, clock generation, discrete I/O, and power management features.

1.2.2.1 External Bus Interface

The external bus interface (EBI) handles the transfer of information between the internal core and memory, peripherals, or other processing elements in the external address space.

1.2.2.2 Chip Select and Wait State Generation

Programmable chip select outputs provide signals to enable external memory and peripheral circuits, providing all handshaking and timing signals for automatic wait-state insertion and data bus sizing.

Base memory address and block size are programmable, with some restrictions. For example, the starting address must be on a boundary that is a multiple of the block size. Each chip select is general purpose; however, any one of the chip selects can be programmed to provide read and write enable signals suitable for use with most popular static RAMs and peripherals. Data bus width (8-bit, 16-bit, or 32-bit) is programmable on all chip selects, and further decoding is available for protection from user mode access or read-only access.

1.2.2.3 System Configuration and Protection

The SIM provides configuration registers that allow general system functions to be controlled and monitored. For example, all on-chip registers can be relocated as a block by programming a module base address, power management modes can be selected, and the source of the most recent RESET or BERR can be checked. The hardware watchdog features can be enabled or disabled, and the bus time-out period can be programmed.

A software watchdog timer is also provided for system protection. If programmed, the timer causes a reset to the MCF5272 if it is not refreshed periodically by software.

1.2.2.4 Power Management

The sleep and stop power management modes reduce power consumption by allowing software to shut down the core, peripherals, or the whole device during inactive periods. To reduce power consumption further, software can individually disable internal clocks to the on-chip peripheral modules. The power-saving modes are described as follows:

- Sleep mode uses interrupt control logic to allow any interrupt condition to wake the processor. As the MCF5272 is fully static, sleep mode is simply the disabling of the core's clock after the current instruction completes. An interrupt from any internal or external source causes on-chip power management logic to reenable the core's clock; execution resumes with the next instruction. This allows rapid return from power-down state as compared to a dynamic implementation that must perform power-on reset processing before software can handle the interrupt request. If interrupts are enabled at the appropriate priority level, program control passes to the relevant interrupt service routine.
- Stop mode is entered by the disabling of the external clock input and is achieved by software setting a bit in a control register. Program execution stops after the current instruction. In stop mode, neither the core nor peripherals are active. The MCF5272 consumes very little power in this mode. To resume normal operation, the external interrupts cause the power management logic to re-enable the external clock input. The MCF5272 resumes program execution from where it entered stop mode (if no interrupt are pending), or starts interrupt exception processing if interrupts are pending.

1.2.2.5 Parallel Input/Output Ports

The MCF5272 has up to three 16-bit general-purpose parallel ports, each line of which can be programmed as either an input or output. Some port lines have dedicated pins and others are shared with other MCF5272 functions. Some outputs have high drive current capability.

1.2.2.6 Interrupt Inputs

The MCF5272 has flexible latched interrupt inputs each of which can generate a separate, maskable interrupt with programmable interrupt priority level and triggering edge (falling or rising). Each interrupt has its own interrupt vector.

1.2.3 UART Module

The MCF5272 has two full-duplex UART modules with an on-chip baud rate generator providing both standard and non-standard baud rates up to 5 Mbps. The module is functionally equivalent to the MC68681 DUART with enhanced features including 24-byte Tx and Rx FIFOs. Data formats can be 5, 6, 7, or 8 bits with even, odd, or no parity and up to 2 stop bits in 1/16-bit increments. Receive and transmit FIFOs minimize CPU service calls. A wide variety of error detection and maskable interrupt capability is provided.

Using a programmable prescaler or an external source, the MCF5272 system clock supports various baud rates. Modem support is provided with request-to-send ($\overline{\text{RTS}}$) and clear-to-send ($\overline{\text{CTS}}$) lines available externally. Full-duplex autoecho loopback, local loopback, and remote loopback modes can be selected.

The UART can be programmed to interrupt or wake up the CPU on various normal or abnormal events. To reduce power consumption, the UART can be disabled by software if not in use.

1.2.4 Timer Module

The timer module contains five timers arranged in two submodules. One submodule contains a programmable software watchdog timer. The other contains four independent, identical general-purpose timer units, each containing a free-running 16-bit timer for use in various modes, including capturing the timer value with an external event, counting external events, or triggering an external signal or interrupting the CPU when the timer reaches a set value. Each unit has an 8-bit prescaler for deriving the clock input frequency from the system clock or external clock input. The output pin associated with each timer has programmable modes.

To reduce power consumption, the timer module can be disabled by software.

1.2.5 Test Access Port

For system diagnostics and manufacturing testing, the MCF5272 includes user-accessible test logic that complies with the IEEE 1149.1 standard for boundary scan testing, often referred to as JTAG (Joint Test Action Group). The IEEE 1149.1 Standard provides more information.

1.3 System Design

This section presents issues to consider when designing with the MCF5272. It describes differences between the MCF5272 (core and peripherals) and various other standard components that are replaced by moving to an integrated device like the MCF5272.

1.3.1 System Bus Configuration

The MCF5272 has flexibility in its system bus interfacing due to the dynamic bus sizing feature in which 32-,16-, and 8-bit data bus sizes are programmable on a per-chip select basis. The programmable nature of the strobe signals (including $\overline{OE}$/$\overline{RD}$, R/$\overline{W}$, $\overline{BS}$[3:0], and $\overline{CS}n$) should ensure that external decode logic is minimal or nonexistent. Configuration software is required upon power-on reset before chip-selected devices can be used, except for chip select 0 ($\overline{CS0}$), which is active after power-on reset until programmed otherwise. BUSW1 and BUSW0 select the initial data bus width for $\overline{CS0}$ only. A wake-up from sleep mode or a restart from stop mode does not require reconfiguration of the chip select registers or other system configuration registers.

1.4 MCF5272-Specific Features

This section describes features peculiar to the MCF5272.

1.4.1 Physical Layer Interface Controller (PLIC)

The physical layer interface controller (PLIC) allows the MCF5272 to connect at a physical level with external CODECs and other peripheral devices that use either the general circuit interface (GCI), or

interchip digital link (IDL), physical layer protocols. This module is primarily intended to facilitate designs that include ISDN interfaces.

1.4.2 Pulse-Width Modulation (PWM) Unit

The PWM unit is intended for use in control applications. With a suitable low-pass filter, it can be used as a digital-to-analog converter. This module generates a synchronous series of pulses. The duty cycle of the pulses is under software control.

Its main features include the following:

- Double-buffered width register
- Variable-divide prescale
- Three identical, independent PWM modules
- Byte-wide width register provides programmable control of duty cycle.

The PWM implements a simple free-running counter with a width register and comparator such that the output is cleared when the counter exceeds the value of the width register. When the counter wraps around, its value is not greater than the width register value, and the output is set high. With a suitable low-pass filter, the PWM can be used as a digital-to-analog converter.

1.4.3 Queued Serial Peripheral Interface (QSPI)

The QSPI module provides a serial peripheral interface with queued transfer capability. It supports up to 16 stacked transfers at a time, making CPU intervention between transfers unnecessary. Transfer RAMs in the QSPI are indirectly accessible using address and data registers. Functionality is similar to the QSPI portion of the QSM (queued serial module) implemented in the MC68332.

The QSPI has the following features:

- Programmable queue to support up to 16 transfers without user intervention
- Supports transfer sizes of 8 to 16 bits in 1-bit increments
- Four peripheral chip-select lines for control of up to 15 devices
- Baud rates from 129.4 Kbps to 33 Mbps at 66 MHz.
- Programmable delays before and after transfers
- Programmable clock phase and polarity
- Supports wrap-around mode for continuous transfers

1.4.4 Universal Serial Bus (USB) Module

The USB controller on the MCF5272 supports device mode data communications with a USB host (typically a PC). One host and up to 127 attached peripherals share USB bandwidth through a host-scheduled, token-based protocol. The USB uses a tiered star topology with a hub at the center of each star. Each wire segment is a point-to-point connection between the host connector and a peripheral connector.

Chapter 2
ColdFire Core

This chapter provides an overview of the microprocessor core of the MCF5272. The chapter describes the V2 programming model as it is implemented on the MCF5272. It also includes a full description of exception handling, data formats, an instruction set summary, and a table of instruction timings.

2.1 Features and Enhancements

The MCF5272 is the most highly-integrated V2 standard product, containing a variety of communications and general-purpose peripherals. The V2 core was designed to maximize code density and performance while minimizing die area.

The following list summarizes MCF5272 features:

- Variable-length RISC Version 2 microprocessor core
- Two independent, decoupled pipelines—two-stage instruction fetch pipeline (IFP) and two-stage operand execution pipeline (OEP)
- Three longword FIFO buffer provides decoupling between the pipelines
- 32-bit internal address bus supporting 4 Gbytes of linear address space
- 32-bit data bus
- 16 user-accessible, 32-bit-wide, general-purpose registers
- Supervisor/user modes for system protection
- Vector base register to relocate exception-vector table
- Optimized for high-level language constructs

2.1.1 Decoupled Pipelines

The IFP prefetches instructions. The OEP decodes instructions, fetches required operands, then executes the specified function. The two independent, decoupled pipeline structures maximize performance while minimizing core size. Pipeline stages are shown in Figure 2-1 and are summarized as follows:

- Two-stage IFP (plus optional instruction buffer stage)
  - — Instruction address generation (IAG) calculates the next prefetch address.
  - — Instruction fetch cycle (IC) initiates prefetch on the processor's local instruction bus.
  - — Instruction buffer (IB) optional stage uses FIFO queue to minimize effects of fetch latency.
- Two-stage OEP
  - — Decode, select/operand fetch (DSOC) decodes the instruction and selects the required components for the effective address calculation, or the operand fetch cycle.
  - — Address generation/execute (AGEX) calculates the operand address, or performs the execution of the instruction.

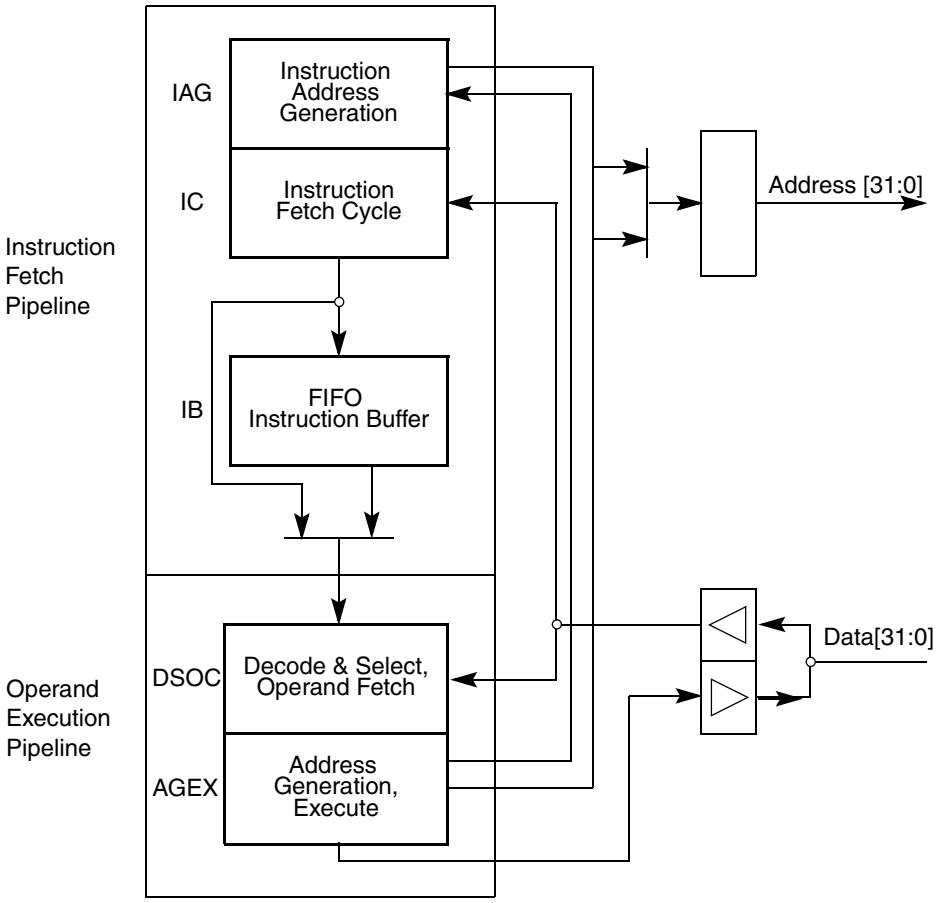

Figure 2-1. ColdFire Pipeline

2.1.1.1 Instruction Fetch Pipeline (IFP)

The IFP generates instruction addresses and fetches. Because the fetch and execution pipelines are decoupled by a three longword FIFO buffer, the IFP can prefetch instructions before the OEP needs them, minimizing stalls.

2.1.1.2 Operand Execution Pipeline (OEP)

The OEP is a two-stage pipeline featuring a traditional RISC datapath with a register file feeding an arithmetic/logic unit (ALU). For simple register-to-register instructions, the first stage of the OEP performs the instruction decode and fetching of the required register operands (OC), while the actual instruction execution is performed in the second stage (EX).

For memory-to-register instructions, the instruction is effectively staged through the OEP twice in the following way:

- The instruction is decoded and the components of the operand address are selected (DS).
- The operand address is generated using the execute engine (AG).
- The memory operand is fetched while any register operand is simultaneously fetched (OC).
- The instruction is executed (EX).

For register-to-memory operations, the stage functions (DS/OC, AG/EX) are effectively performed simultaneously allowing single-cycle execution. For read-modify-write instructions, the pipeline effectively combines a memory-to-register operation with a store operation.

2.1.1.2.1 Illegal Opcode Handling

On Version 2 ColdFire implementations, only some illegal opcodes (0x0000 and 0x4AFC) are decoded and generate an illegal instruction exception. Additionally, attempting to execute an illegal line A or line F opcode generates unique exception types. If any other unsupported opcode is executed, the resulting operation is undefined.

2.1.1.2.2 Hardware Multiply/Accumulate (MAC) Unit

The MAC is an optional unit in Version 2 that provides hardware support for a limited set of digital signal processing (DSP) operations used in embedded code, while supporting the integer multiply instructions in the ColdFire microprocessor family. The MAC features a three-stage execution pipeline, optimized for 16 x 16 multiplies. It is tightly coupled to the OEP, which can issue a 16 x 16 multiply with a 32-bit accumulation plus fetch a 32-bit operand in a single cycle. A 32 x 32 multiply with a 32-bit accumulation requires three cycles before the next instruction can be issued.

Figure 2-2 shows basic functionality of the MAC. A full set of instructions are provided for signed and unsigned integers plus signed, fixed-point fractional input operands.

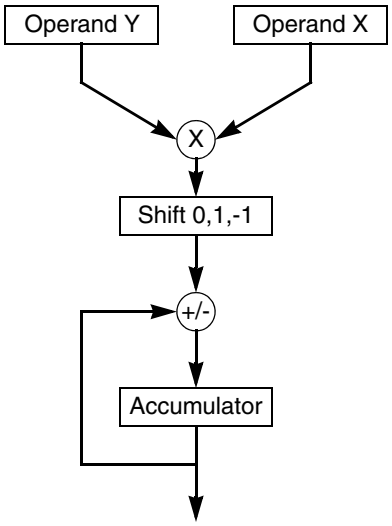

Figure 2-2. ColdFire Multiply-Accumulate Functionality Diagram

The MAC provides functionality in the following three related areas, which are described in detail in Chapter 3, “Hardware Multiply/Accumulate (MAC) Unit.”

- Signed and unsigned integer multiplies
- Multiply-accumulate operations with signed and unsigned fractional operands
- Miscellaneous register operations

2.1.1.2.3 Hardware Divide Unit

The hardware divide unit performs the following integer division operations:

- 32-bit operand/16-bit operand producing a 16-bit quotient and a 16-bit remainder
- 32-bit operand/32-bit operand producing a 32-bit quotient
- 32-bit operand/32-bit operand producing a 32-bit remainder

2.1.2 Debug Module Enhancements

The ColdFire processor core debug interface supports system integration in conjunction with low-cost development tools. Real-time trace and debug information can be accessed through a standard interface, which allows the processor and system to be debugged at full speed without costly in-circuit emulators. On-chip breakpoint resources include the following:

- Configuration/status register (CSR)
- Bus attributes and mask register (AATR)
- Breakpoint registers. These can be used to define triggers combining address, data, and PC conditions in single- or dual-level definitions. They include the following:
  - PC breakpoint register (PBR)
  - PC breakpoint mask register (PBMR)
  - Data operand address breakpoint registers (ABHR/ABLR)
  - Data breakpoint register (DBR)
- Data breakpoint mask register (DBMR)
- Trigger definition register (TDR) can be programmed to generate a processor halt or initiate a debug interrupt exception

These registers can be accessed through the dedicated debug serial communication channel, or from the processor's supervisor programming model, using the WDEBUG instruction.

2.2 Programming Model

The MCF5272 programming model consists of three instruction and register groups—user, MAC (also user-mode), and supervisor, shown in Figure 2-2. User mode programs are restricted to user and MAC instructions and programming models. Supervisor-mode system software can reference all user-mode and MAC instructions and registers and additional supervisor instructions and control registers. The user or supervisor programming model is selected based on SR[S]. The following sections describe the registers in the user, MAC, and supervisor programming models.

2.2.1 User Programming Model

As Figure 2-3 shows, the user programming model consists of the following registers:

- 16 general-purpose 32-bit registers, D0–D7 and A0–A7
- 32-bit program counter
- 8-bit condition code register

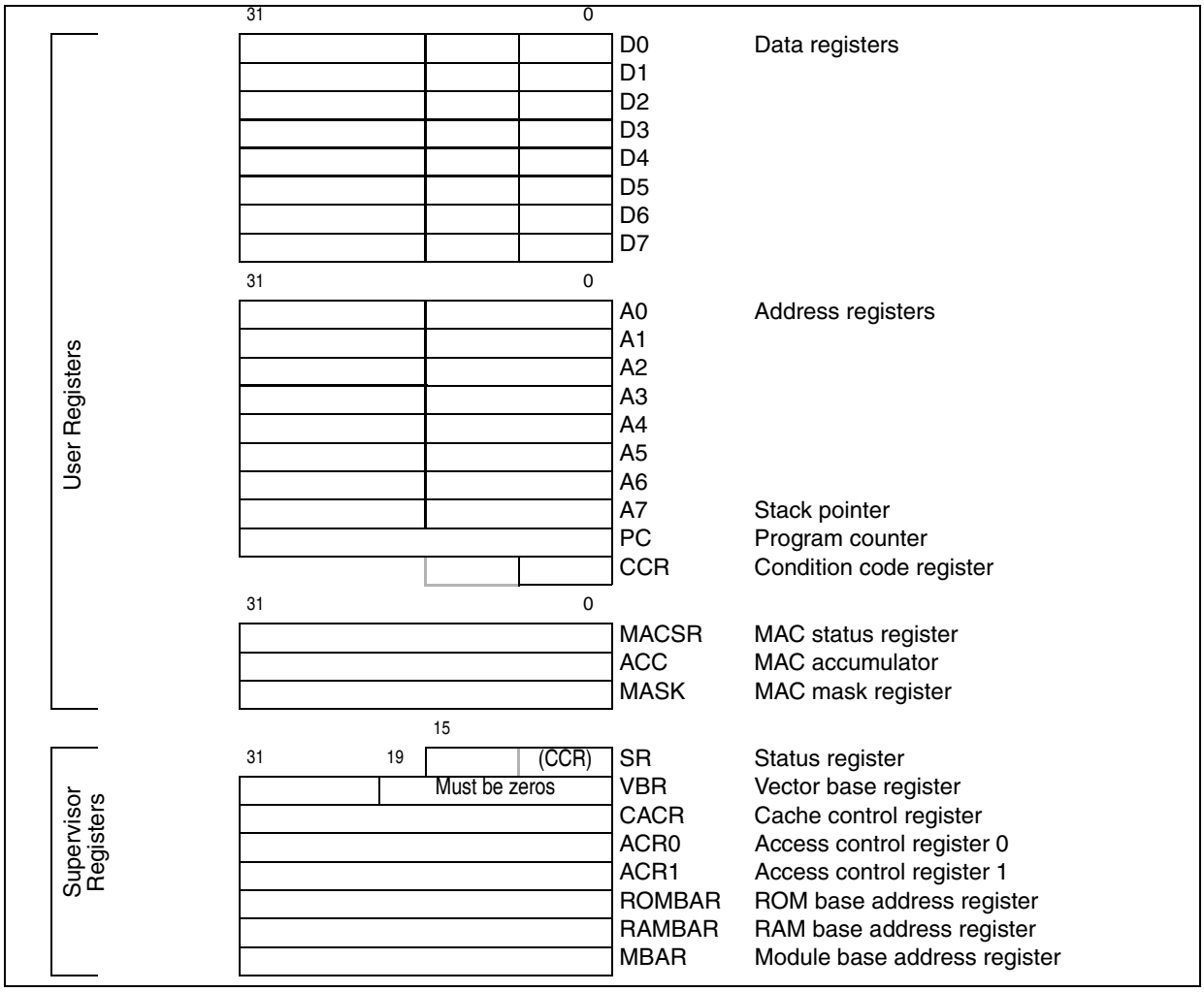

Figure 2-3. ColdFire Programming Model

2.2.1.1 Data Registers (D0–D7)

Registers D0–D7 are used as data registers for bit, byte (8-bit), word (16-bit), and longword (32-bit) operations. They may also be used as index registers.

2.2.1.2 Address Registers (A0–A6)

The address registers (A0–A6) can be used as software stack pointers, index registers, or base address registers and may be used for word and longword operations.

2.2.1.3 Stack Pointer (A7, SP)

The processor core supports a single hardware stack pointer (A7) used during stacking for subroutine calls, returns, and exception handling. The stack pointer is implicitly referenced by certain operations and can be explicitly referenced by any instruction specifying an address register. The initial value of A7 is loaded

from the reset exception vector, address 0x0000. The same register is used for user and supervisor modes, and may be used for word and longword operations.

A subroutine call saves the program counter (PC) on the stack and the return restores the PC from the stack. The PC and the status register (SR) are saved on the stack during exception and interrupt processing. The return from exception instruction restores SR and PC values from the stack.

2.2.1.4 Program Counter (PC)

The PC holds the address of the executing instruction. For sequential instructions, the processor automatically increments the PC. When program flow changes, the PC is updated with the target instruction. For some instructions, the PC specifies the base address for PC-relative operand addressing modes.

2.2.1.5 Condition Code Register (CCR)

The CCR, Figure 2-4, occupies SR[7–0], as shown in Figure 2-3. CCR[4–0] are indicator flags based on results generated by arithmetic operations.

	7	6	5	4	3	2	1	0
Field	—			X	N	Z	V	C
Reset	000			Undefined				
R/W	R			R/W	R/W	R/W	R/W	R/W

Figure 2-4. Condition Code Register (CCR)

CCR fields are described in Table 2-1.

Table 2-1. CCR Field Descriptions

Bits	Name	Description
7–5	—	Reserved, should be cleared.
4	X	Extend condition code bit. Assigned the value of the carry bit for arithmetic operations; otherwise not affected or set to a specified result. Also used as an input operand for multiple-precision arithmetic.
3	N	Negative condition code bit. Set if the msb of the result is set; otherwise cleared.
2	Z	Zero condition code bit. Set if the result equals zero; otherwise cleared.
1	V	Overflow condition code bit. Set if an arithmetic overflow occurs, implying that the result cannot be represented in the operand size; otherwise cleared.
0	C	Carry condition code bit. Set if a carry-out of the data operand msb occurs for an addition or if a borrow occurs in a subtraction; otherwise cleared.

2.2.1.6 MAC Programming Model

Figure 2-3 shows the registers in the MAC portion of the user programming model. These registers are described as follows:

- Accumulator (ACC)—This 32-bit, read/write, general-purpose register is used to accumulate the results of MAC operations.
- Mask register (MASK)—This 16-bit general-purpose register provides an optional address mask for MAC instructions that fetch operands from memory. It is useful in the implementation of circular queues in operand memory.
- MAC status register (MACSR)—This 8-bit register defines configuration of the MAC unit and contains indicator flags affected by MAC instructions. Unless noted otherwise, MACSR indicator flag settings are based on the final result, that is, the result of the final operation involving the product and accumulator.

2.2.2 Supervisor Programming Model

The MCF5272 supervisor programming model is shown in Figure 2-3. Typically, system programmers use the supervisor programming model to implement operating system functions and provide memory and I/O control. The supervisor programming model provides access to the user registers and additional supervisor registers, which include the upper byte of the status register (SR), the vector base register (VBR), and registers for configuring attributes of the address space connected to the Version 2 processor core. Most supervisor-mode registers are accessed by using the MOVEC instruction with the control register definitions in Table 2-2.

Table 2-2. MOVEC Register Map

Rc[11–0]	Register Definition
0x002	Cache control register (CACR)
0x004	Access control register 0 (ACR0)
0x005	Access control register 1 (ACR1)
0x801	Vector base register (VBR)
0xC00	ROM base address register
0xC04	RAM base address register (RAMBAR)
0xC0F	Module base address register (MBAR)

2.2.2.1 Status Register (SR)

The SR stores the processor status, the interrupt priority mask, and other control bits. Supervisor software can read or write the entire SR; user software can read or write only SR[7–0], described in Section 2.2.1.5, “Condition Code Register (CCR).” The control bits indicate processor states—trace mode (T), supervisor or user mode (S), and master or interrupt state (M). SR is set to 0x27*xx* after reset.

	15					8	7					0
	System Byte						Condition Code Register (CCR)					
Field	T	—	S	M	—	I	—	X	N	Z	V	C
Reset	0	0	1	0	0	111	000	—	—	—	—	—
R/W	R/W	R	R/W	R/W	R	R/W	R	R/W	R/W	R/W	R/W	R/W

Figure 2-5. Status Register (SR)

Table 2-3 describes SR fields.

Table 2-3. Status Field Descriptions

Bits	Name	Description
15	T	Trace enable. When T is set, the processor performs a trace exception after every instruction.
13	S	Supervisor/user state. Indicates whether the processor is in supervisor or user mode 0 User mode 1 Supervisor mode
12	M	Master/interrupt state. Cleared by an interrupt exception. It can be set by software during execution of the RTE or move to SR instructions so the OS can emulate an interrupt stack pointer.
10–8	I	Interrupt priority mask. Defines the current interrupt priority. Interrupt requests are inhibited for all priority levels less than or equal to the current priority, except the edge-sensitive level-7 request, which cannot be masked.
7–0	CCR	Condition code register. See Figure 2-4.

2.2.2.2 Vector Base Register (VBR)

The VBR holds the base address of the exception vector table in memory. The displacement of an exception vector is added to the value in this register to access the vector table. VBR[19–0] are not implemented and are assumed to be zero, forcing the vector table to be aligned on a 0-modulo-1-Mbyte boundary.

	31	20	19	0
Field	Exception vector table base address		—	
Reset	0000_0000_0000_0000_0000_0000_0000_0000			
R/W	Written from a BDM serial command or from the CPU using the MOVEC instruction. VBR can be read from the debug module only. The upper 12 bits are returned, the low-order 20 bits are undefined.			
Rc[11–0]	0x801			

Figure 2-6. Vector Base Register (VBR)

2.2.2.3 Cache Control Register (CACR)

The CACR controls operation of the instruction and data cache memory. It includes bits for enabling, freezing, and invalidating cache contents. It also includes bits for defining the default cache mode and write-protect fields. See Section 4.5.3.1, “Cache Control Register (CACR).”

2.2.2.4 Access Control Registers (ACR0–ACR1)

The access control registers (ACR0–ACR1) define attributes for two user-defined memory regions. Attributes include definition of cache mode, write protect, and buffer write enables. See Section 4.5.3.2, “Access Control Registers (ACR0 and ACR1).”

2.2.2.5 ROM Base Address Register (ROMBAR)

The ROMBAR base address register determines the base address of the internal ROM module and indicates the types of references mapped to it. The ROMBAR includes a base address, write-protect bit, address space mask bits, and an enable. Note that the MCF5272 ROM contains data for the HDLC module and is not user programmable. See Section 4.4.2.1, “ROM Base Address Register (ROMBAR).”

2.2.2.6 RAM Base Address Register (RAMBAR)

The RAMBAR register determines the base address location of the internal SRAM module and indicates the types of references mapped to it. The RAMBAR includes a base address, write-protect bit, address space mask bits, and an enable. The RAM base address must be aligned on a 0-modulo-4-Kbyte boundary. See Section 4.3.2.1, “SRAM Base Address Register (RAMBAR).”

2.2.2.7 Module Base Address Register (MBAR)

The module base address register (MBAR) defines the logical base address for the memory-mapped space containing the control registers for the on-chip peripherals. See Section 6.2.2, “Module Base Address Register (MBAR).”

2.3 Integer Data Formats

Table 2-4 lists the integer operand data formats. Integer operands can reside in registers, memory, or instructions. The operand size for each instruction is either explicitly encoded in the instruction or implicitly defined by the instruction operation.

Table 2-4. Integer Data Formats

Operand Data Format	Size
Bit	1 bit
Byte integer	8 bits
Word integer	16 bits
Longword integer	32 bits

2.4 Organization of Data in Registers

The following sections describe data organization within the data, address, and control registers.

2.4.1 Organization of Integer Data Formats in Registers

Figure 2-7 shows the integer format for data registers. Each integer data register is 32 bits wide. Byte and word operands occupy the lower 8- and 16-bit portions of integer data registers, respectively. Longword operands occupy the entire 32 bits of integer data registers. A data register that is either a source or destination operand only uses or changes the appropriate lower 8 or 16 bits in byte or word operations, respectively. The remaining high-order portion does not change. The least significant bit (lsb) of all integer sizes is zero, the most-significant bit (msb) of a longword integer is 31, the msb of a word integer is 15, and the msb of a byte integer is 7.

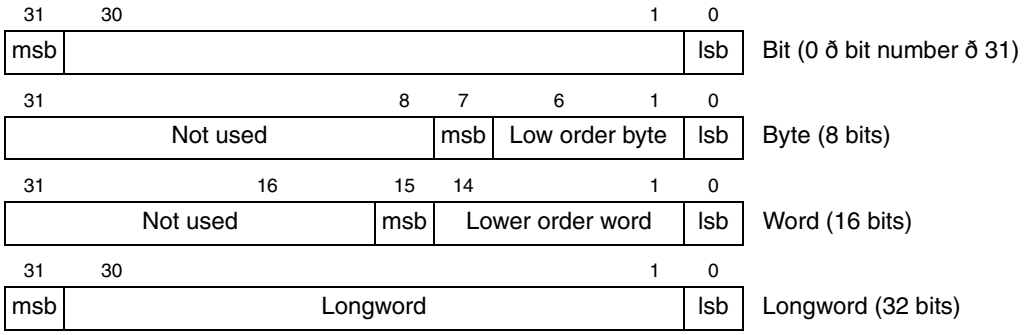

Figure 2-7. Organization of Integer Data Formats in Data Registers

The instruction set encodings do not allow the use of address registers for byte-sized operands. When an address register is a source operand, either the low-order word or the entire longword operand is used, depending on the operation size. Word-length source operands are sign-extended to 32 bits and then used in the operation with an address register destination. When an address register is a destination, the entire register is affected, regardless of the operation size. Figure 2-8 shows integer formats for address registers.

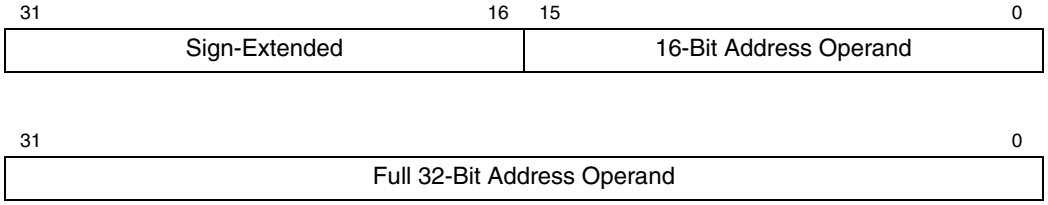

Figure 2-8. Organization of Integer Data Formats in Address Registers

The size of control registers varies according to function. Some have undefined bits reserved for future definition by Freescale. Those particular bits read as zeros and must be written as zeros for future compatibility.

All operations to the SR and CCR are word-size operations. For all CCR operations, the upper byte is read as all zeros and is ignored when written, regardless of privilege mode.

2.4.2 Organization of Integer Data Formats in Memory

All ColdFire processors use a big-endian addressing scheme. The byte-addressable organization of memory allows lower addresses to correspond to higher order bytes. The address N of a longword data item corresponds to the address of the high-order word. The lower order word is located at address N + 2. The address N of a word data item corresponds to the address of the high-order byte. The lower order byte is located at address N + 1. This organization is shown in Figure 2-9.

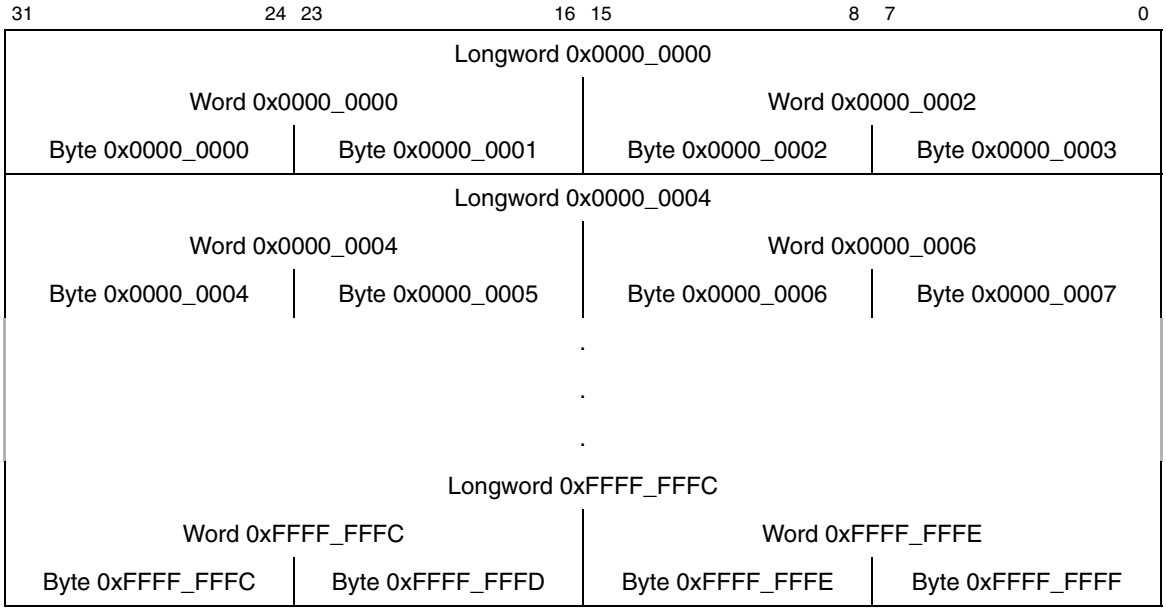

Figure 2-9. Memory Operand Addressing

2.5 Addressing Mode Summary

Addressing modes are categorized by how they are used. Data addressing modes refer to data operands. Memory addressing modes refer to memory operands. Alterable addressing modes refer to alterable (writable) data operands. Control addressing modes refer to memory operands without an associated size.

These categories sometimes combine to form more restrictive categories. Two combined classifications are alterable memory (both alterable and memory) and data alterable (both alterable and data). Twelve of the most commonly used effective addressing modes from the M68000 family are available on ColdFire microprocessors. Table 2-5 summarizes these modes and their categories.

Table 2-5. ColdFire Effective Addressing Modes

Addressing Modes	Syntax	Mode Field	Reg. Field	Category			
				Data	Memory	Control	Alterable
Register direct Data Address	 Dn An	 000 001	 reg. no. reg. no.	 X —	 — —	 — —	 X X
Register indirect Address Address with Postincrement Address with Predecrement Address with Displacement	 (An) (An)+ –(An) (d_{16}, An)	 010 011 100 101	 reg. no. reg. no. reg. no. reg. no.	 X X X X	 X X X X	 X — — X	 X X X X
Address register indirect with scaled index 8-bit displacement	(d_8, An, Xi*SF)	110	reg. no.	X	X	X	X
Program counter indirect with displacement	(d_{16}, PC)	111	010	X	X	X	—
Program counter indirect with scaled index 8-bit displacement	(d_8, PC, Xi*SF)	111	011	X	X	X	—
Absolute data addressing Short Long	 (xxx).W (xxx).L	 111 111	 000 001	 X X	 X X	 X X	 — —
Immediate	#<xxx>	111	100	X	X	—	—

2.6 Instruction Set Summary

The ColdFire instruction set is a simplified version of the M68000 instruction set. The removed instructions include BCD, bit field, logical rotate, decrement and branch, and integer multiply with a 64-bit result. Nine new MAC instructions have been added.

Table 2-6 lists notational conventions used throughout this manual.

Table 2-6. Notational Conventions

Instruction	Operand Syntax
Opcode Wildcard	
cc	Logical condition (example: NE for not equal)
Register Specifications	
An	Any address register n (example: A3 is address register 3)
Ay,Ax	Source and destination address registers, respectively
Dn	Any data register n (example: D5 is data register 5)
Dy,Dx	Source and destination data registers, respectively
Rc	Any control register (example VBR is the vector base register)
Rm	MAC registers (ACC, MAC, MASK)
Rn	Any address or data register
Rw	Destination register w (used for MAC instructions only)
Ry,Rx	Any source and destination registers, respectively
Xi	index register i (can be an address or data register: Ai, Di)
Register Names	
ACC	MAC accumulator register
CCR	Condition code register (lower byte of SR)
MACSR	MAC status register
MASK	MAC mask register
PC	Program counter
SR	Status register
Port Names	
DDATA	Debug data port
PST	Processor status port
Miscellaneous Operands	
#<data>	Immediate data following the 16-bit operation word of the instruction
<ea>	Effective address

Table 2-6. Notational Conventions (continued)

Instruction	Operand Syntax
<ea>y,<ea>x	Source and destination effective addresses, respectively
<label>	Assembly language program label
<list>	List of registers for MOVEM instruction (example: D3–D0)
<shift>	Shift operation: shift left (<<), shift right (>>)
<size>	Operand data size: byte (B), word (W), longword (L)
bc	Instruction cache
# <vector>	Identifies the 4-bit vector number for trap instructions
<>	identifies an indirect data address referencing memory
<xxx>	identifies an absolute address referencing memory
dn	Signal displacement value, *n* bits wide (example: d16 is a 16-bit displacement)
SF	Scale factor (x1, x2, x4 for indexed addressing mode, <<1n>> for MAC operations)
Operations	
+	Arithmetic addition or postincrement indicator
–	Arithmetic subtraction or predecrement indicator
x	Arithmetic multiplication
/	Arithmetic division
~	Invert; operand is logically complemented
&	Logical AND
|	Logical OR
^	Logical exclusive OR
<<	Shift left (example: D0 << 3 is shift D0 left 3 bits)
>>	Shift right (example: D0 >> 3 is shift D0 right 3 bits)
→	Source operand is moved to destination operand
←→	Two operands are exchanged
sign-extended	All bits of the upper portion are made equal to the high-order bit of the lower portion
If <condition> then <operations> else <operations>	Test the condition. If the condition is true, the operations in the then clause are performed. If the condition is false and the optional else clause is present, the operations in the else clause are performed. If the condition is false and the else clause is omitted, the instruction performs no operation. Refer to the Bcc instruction description as an example.

Table 2-6. Notational Conventions (continued)

Instruction	Operand Syntax
Subfields and Qualifiers	
{}	Optional operation
()	Identifies an indirect address
d_n	Displacement value, n-bits wide (example: d_{16} is a 16-bit displacement)
Address	Calculated effective address (pointer)
Bit	Bit selection (example: Bit 3 of D0)
lsb	Least significant bit (example: lsb of D0)
LSB	Least significant byte
LSW	Least significant word
msb	Most significant bit
MSB	Most significant byte
MSW	Most significant word
Condition Code Register Bit Names	
C	Carry
N	Negative
V	Overflow
X	Extend
Z	Zero

2.6.1 Instruction Set Summary

Table 2-7 lists implemented user-mode instructions by opcode.

Table 2-7. User-Mode Instruction Set Summary

Instruction	Operand Syntax	Operand Size	Operation
ADD	Dy,<ea>x <ea>y,Dx	.L .L	Source + destination → destination
ADDA	<ea>y,Ax	.L	Source + destination → destination
ADDI	#<data>,Dx	.L	Immediate data + destination → destination
ADDQ	#<data>,<ea>x	.L	Immediate data + destination → destination
ADDX	Dy,Dx	.L	Source + destination + X → destination
AND	Dy,<ea>x <ea>y,Dx	.L .L	Source & destination → destination
ANDI	#<data>,Dx	.L	Immediate data & destination → destination
ASL	Dy,Dx #<data>,Dx	.L .L	X/C ← (Dx << Dy) ← 0 X/C ← (Dx << #<data>) ← 0
ASR	Dy,Dx #<data>,Dx	.L .L	MSB → (Dx >> Dy) → X/C MSB → (Dx >> #<data>) → X/C
Bcc	<label>	.B,.W	If condition true, then PC + 2 + d_n → PC

Table 2-7. User-Mode Instruction Set Summary (continued)

Instruction	Operand Syntax	Operand Size	Operation
BCHG	Dy,<ea>x #<data>,<ea-1>x	.B,.L .B,.L	~(<bit number> of destination) → Z, Bit of destination
BCLR	Dy,<ea>x #<data>,<ea-1>x	.B,.L .B,.L	~(<bit number> of destination) → Z; 0 → bit of destination
BRA	<label>	.B,.W	PC + 2 + d_n → PC
BSET	Dy,<ea>x #<data>,<ea-1>x	.B,.L .B,.L	~(<bit number> of destination) → Z; 1→ bit of destination
BSR	<label>	.B,.W	SP – 4 → SP; next sequential PC→ (SP); PC + 2 + d_n → PC
BTST	Dy,<ea>x #<data>,<ea-1>x	.B,.L .B,.L	~(<bit number> of destination) → Z
CLR	<ea>y,Dx	.B,.W,.L	0 → destination
CMP	<ea>y,Ax	.L	Destination – source
CMPA	<ea>y,Dx	.L	Destination – source
CMPI	<ea>y,Dx	.L	Destination – immediate data
DIVS	<ea-1>y,Dx <ea>y,Dx	.W .L	Dx /<ea>y → Dx {16-bit remainder; 16-bit quotient} Dx /<ea>y → Dx {32-bit quotient} Signed operation
DIVU	<ea-1>y,Dx Dy,<ea>x	.W .L	Dx /<ea>y → Dx {16-bit remainder; 16-bit quotient} Dx /<ea>y → Dx {32-bit quotient} Unsigned operation
EOR	Dy,<ea>x	.L	Source ^ destination → destination
EORI	#<data>,Dx	.L	Immediate data ^ destination → destination
EXT	#<data>,Dx	.B →.W .W →.L	Sign-extended destination → destination
EXTB	Dx	.B →.L	Sign-extended destination → destination
HALT[1]	None	Unsized	Enter halted state
JMP	<ea-3>y	Unsized	Address of <ea> → PC
JSR	<ea-3>y	Unsized	SP – 4 → SP; next sequential PC → (SP); <ea> → PC
LEA	<ea-3>y,Ax	.L	<ea> → Ax
LINK	Ax,#<d16>	.W	SP – 4 → SP; Ax → (SP); SP → Ax; SP + d16 → SP
LSL	Dy,Dx #<data>,Dx	.L .L	X/C ← (Dx << Dy) ← 0 X/C ← (Dx << #<data>) ← 0
LSR	Dy,Dx #<data>,Dx	.L .L	0 → (Dx >> Dy) → X/C 0 → (Dx >> #<data>) → X/C
MAC	Ry,RxSF	.L + (.W × .W) → .L .L + (.L × .L) → .L	ACC + (Ry × Rx){<< 1 | >> 1} → ACC ACC + (Ry × Rx){<< 1 | >> 1} → ACC; (<ea>y{&MASK}) → Rw
MACL	Ry,RxSF,<ea-1>y,Rw	.L + (.W × .W) → .L, .L .L + (.L × .L) → .L, .L	ACC + (Ry × Rx){<< 1 | >> 1} → ACC ACC + (Ry × Rx){<< 1 | >> 1} → ACC; (<ea-1>y{&MASK}) → Rw
MOVE	<ea>y,<ea>x	.B,.W,.L	<ea>y → <ea>x

Table 2-7. User-Mode Instruction Set Summary (continued)

Instruction	Operand Syntax	Operand Size	Operation
MOVE from MAC	MASK,Rx ACC,Rx MACSR,Rx	.L	Rm → Rx
	MACSR,CCR	.L	MACSR → CCR
MOVE to MAC	Ry,ACC Ry,MACSR Ry,MASK	.L	Ry → Rm
	#<data>,ACC #<data>,MACSR #<data>,MASK	.L	#<data> → Rm
MOVE from CCR	CCR,Dx	.W	CCR → Dx
MOVE to CCR	Dy,CCR #<data>,CCR	.B	Dy → CCR #<data> → CCR
MOVEA	<ea>y,Ax	.W,.L → .L	Source → destination
MOVEM	#<list>,<ea-2>x <ea-2>y,#<list>	.L .L	Listed registers → destination Source → listed registers
MOVEQ	#<data>,Dx	.B → .L	Sign-extended immediate data → destination
MSAC	Ry,RxSF	.L - (.W × .W) → .L .L - (.L × .L) → .L	ACC – (Ry × Rx){<< 1 | >> 1} → ACC
MSACL	Ry,RxSF,<ea-1>y,Rw	.L - (.W × .W) → .L, .L .L - (.L × .L) → .L, .L	ACC – (Ry × Rx){<< 1 | >> 1} → ACC; (<ea-1>y{&MASK}) → Rw
MULS	<ea>y,Dx	.W X .W → .L .L X .L → .L	Source × destination → destination Signed operation
MULU	<ea>y,Dx	.W X .W → .L .L X .L → .L	Source × destination → destination Unsigned operation
NEG	Dx	.L	0 – destination → destination
NEGX	Dx	.L	0 – destination – X → destination
NOP	none	Unsized	Synchronize pipelines; PC + 2 → PC
NOT	Dx	.L	~ Destination → destination
OR	<ea>y,Dx Dy,<ea>x	.L	Source | destination → destination
ORI	#<data>,Dx	.L	Immediate data | destination → destination
PEA	<ea-3>y	.L	SP – 4 → SP; Address of <ea> → (SP)
PULSE	none	Unsized	Set PST= 0x4
REMS	<ea-1>,Dx	.L	Dx/<ea>y → Dw {32-bit remainder} Signed operation
REMU	<ea-1>,Dx	.L	Dx/<ea>y → Dw {32-bit remainder} Unsigned operation
RTS	none	Unsized	(SP) → PC; SP + 4 → SP
Scc	Dx	.B	If condition true, then 1s — destination; Else 0s → destination

Table 2-7. User-Mode Instruction Set Summary (continued)

Instruction	Operand Syntax	Operand Size	Operation
SUB	<ea>y,Dx Dy,<ea>x	.L .L	Destination – source → destination
SUBA	<ea>y,Ax	.L	Destination – source → destination
SUBI	#<data>,Dx	.L	Destination – immediate data → destination
SUBQ	#<data>,<ea>x	.L	Destination – immediate data → destination
SUBX	Dy,Dx	.L	Destination – source – X → destination
SWAP	Dx	.W	MSW of Dx ←→ LSW of Dx
TRAP	#<vector>	Unsized	SP – 4 → SP;PC → (SP); SP – 2 → SP;SR → (SP); SP – 2 → SP; format → (SP); Vector address → PC
TRAPF	None #<data>	Unsized .W .L	PC + 2 → PC PC + 4 → PC PC + 6 → PC
TST	<ea>y	.B,.W,.L	Set condition codes
UNLK	Ax	Unsized	Ax →SP; (SP) → Ax; SP + 4 → SP
WDDATA	<ea>y	.B,.W,.L	<ea>y →DDATA port

1 By default the HALT instruction is a supervisor-mode instruction; however, it can be configured to allow user-mode execution by setting CSR[UHE].

Table 2-8 describes supervisor-mode instructions.

Table 2-8. Supervisor-Mode Instruction Set Summary

Instruction	Operand Syntax	Operand Size	Operation
CPUSHL	(bc),(Ax)	Unsized	Invalidate instruction cache line
HALT[1]	none	Unsized	Enter halted state
MOVE from SR	SR, Dx	.W	SR → Dx
MOVE to SR	Dy,SR #<data>,SR	.W	Source → SR
MOVEC	Ry,Rc	.L	Ry → Rc Rc Register Definition 0x002 Cache control register (CACR) 0x004 Access control register 0 (ACR0) 0x005 Access control register 1 (ACR1) 0x801 Vector base register (VBR) 0xC00 ROM base address register (ROMBAR) 0xC04 RAM base address register (RAMBAR) 0xC0F Module base address register (MBAR)
RTE	None	Unsized	(SP+2) → SR; SP+4 → SP; (SP) → PC; SP + formatfield — SP
STOP	#<data>	.W	Immediate data → SR; enter stopped state
WDEBUG	<ea-2>y	.L	<ea-2>y → debug module

1 The HALT instruction can be configured to allow user-mode execution by setting CSR[UHE].

2.7 Instruction Timing

The timing data presented in this section assumes the following:

- The OEP is loaded with the opword and all required extension words at the beginning of each instruction execution. This implies that the OEP spends no time waiting for the IFP to supply opwords and/or extension words.
- The OEP experiences no sequence-related pipeline stalls. For the MCF5272,the most common example of this type of stall involves consecutive store operations, excluding the MOVEM instruction. For all store operations (except MOVEM), certain hardware resources within the processor are marked as busy for two clock cycles after the final DSOC cycle of the store instruction. If a subsequent store instruction is encountered within this two-cycle window, it is stalled until the resource again becomes available. Thus, the maximum pipeline stall involving consecutive store operations is two cycles.
- The OEP can complete all memory accesses without memory causing any stall conditions. Thus, timing details in this section assume an infinite zero-wait state memory attached to the core.
- All operand data accesses are assumed to be aligned on the same byte boundary as the operand size:
  — 16-bit operands aligned on 0-modulo-2 addresses
  — 32-bit operands aligned on 0-modulo-4 addresses
  Operands that do not meet these guidelines are misaligned. Table 2-9 shows how the core decomposes a misaligned operand reference into a series of aligned accesses.

Table 2-9. Misaligned Operand References

A[1:0]	Size	Bus Operations	Additional C(R/W) [1]
x1	Word	Byte, Byte	2(1/0) if read 1(0/1) if write
x1	Long	Byte, Word, Byte	3(2/0) if read 2(0/2) if write
10	Long	Word, Word	2(1/0) if read 1(0/1) if write

[1] Each timing entry is presented as C(r/w), described as follows:
C is the number of processor clock cycles, including all applicable operand fetches and writes, as well as all internal core cycles required to complete the instruction execution.
r/w is the number of operand reads (r) and writes (w) required by the instruction. An operation performing a read-modify write function is denoted as (1/1).

2.7.1 MOVE Instruction Execution Times

The execution times for the MOVE.{B,W,L} instructions are shown in the next tables. Table 2-12 shows the timing for the other generic move operations.

NOTE

For all tables in this section, the execution time of any instruction using the PC-relative effective addressing modes is equivalent to the time using comparable An-relative mode.

```
ET with {<ea> = (d16,PC)}       equals ET with {<ea> = (d16,An)}
ET with {<ea> = (d8,PC,Xi*SF)}  equals ET with {<ea> = (d8,An,Xi*SF)}
```

The nomenclature “(xxx).wl” refers to both forms of absolute addressing, (xxx).w and (xxx).l.

Table 2-10 lists execution times for MOVE.{B,W} instructions.

Table 2-10. Move Byte and Word Execution Times

Source	Destination						
	Rx	(Ax)	(Ax)+	–(Ax)	(d16,Ax)	(d8,Ax,Xi*SF)	(xxx).wl
Dy	1(0/0)	1(0/1)	1(0/1)	1(0/1)	1(0/1)	2(0/1)	1(0/1)
Ay	1(0/0)	1(0/1)	1(0/1)	1(0/1)	1(0/1)	2(0/1)	1(0/1)
(Ay)	3(1/0)	3(1/1)	3(1/1)	3(1/1)	3(1/1)	4(1/1)	3(1/1)
(Ay)+	3(1/0)	3(1/1)	3(1/1)	3(1/1)	3(1/1)	4(1/1)	3(1/1)
–(Ay)	3(1/0)	31/1)	3(1/1)	3(1/1)	3(1/1)	4(1/1)	3(1/1)
(d16,Ay)	3(1/0)	3(1/1)	3(1/1)	3(1/1)	3(1/1)	—	—
(d8,Ay,Xi*SF)	4(1/0)	4(1/1)	4(1/1)	4(1/1)	—	—	—
(xxx).w	3(1/0)	3(1/1)	3(1/1)	3(1/1)	—	—	—
(xxx).l	3(1/0)	3(1/1)	3(1/1)	3(1/1)	—	—	—
(d16,PC)	3(1/0)	3(1/1)	3(1/1)	3(1/1)	3(1/1)	—	—
(d8,PC,Xi*SF)	4(1/0)	4(1/1)	4(1/1)	4(1/1)	—	—	—
#<xxx>	1(0/0)	3(0/1)	3(0/1)	3(0/1)	—	—	—

Table 2-11 lists timings for MOVE.L.

Table 2-11. Move Long Execution Times

Source	Destination						
	Rx	(Ax)	(Ax)+	–(Ax)	(d16,Ax)	(d8,Ax,Xi*SF)	(xxx).wl
Dy	1(0/0)	1(0/1)	1(0/1)	1(0/1)	1(0/1)	2(0/1)	1(0/1)
Ay	1(0/0)	1(0/1)	1(0/1)	1(0/1)	1(0/1)	2(0/1)	1(0/1)
(Ay)	2(1/0)	2(1/1)	2(1/1)	2(1/1)	2(1/1)	3(1/1)	2(1/1)
(Ay)+	2(1/0)	2(1/1)	2(1/1)	2(1/1)	2(1/1)	3(1/1)	2(1/1)
–(Ay)	2(1/0)	2(1/1)	2(1/1)	2(1/1)	2(1/1)	3(1/1)	2(1/1)
(d16,Ay)	2(1/0)	2(1/1)	2(1/1)	2(1/1)	2(1/1)	—	—
(d8,Ay,Xi*SF)	3(1/0)	3(1/1)	3(1/1)	3(1/1)	—	—	—
(xxx).w	2(1/0)	2(1/1)	2(1/1)	2(1/1)	—	—	—
(xxx).l	2(1/0)	2(1/1)	2(1/1)	2(1/1)	—	—	—
(d16,PC)	2(1/0)	2(1/1)	2(1/1)	2(1/1)	2(1/1)	—	—
(d8,PC,Xi*SF)	3(1/0)	3(1/1)	3(1/1)	3(1/1)	—	—	—
#<xxx>	1(0/0)	2(0/1)	2(0/1)	2(0/1)	—	—	—

Table 2-12 gives execution times for MOVE.L instructions accessing program-visible registers of the MAC unit, along with other MOVE.L timings. Execution times for moving contents of the ACC or MACSR into a destination location represent the best-case scenario when the store instruction is executed and no load, MAC, or MSAC instructions are in the MAC execution pipeline. In general, these store operations require only one cycle for execution, but if they are preceded immediately by a load, MAC, or MSAC instruction, the MAC pipeline depth is exposed and execution time is three cycles.

Table 2-12. Move Execution Times

Opcode	<ea>	Effective Address							
		Rn	(An)	(An)+	–(An)	(d16,An)	(d8,An,Xi*SF)	(xxx).wl	#<xxx>
move.l	<ea>,ACC	1(0/0)	—	—	—	—	—	—	1(0/0)
move.l	<ea>,MACSR	2(0/0)	—	—	—	—	—	—	2(0/0)
move.l	<ea>,MASK	1(0/0)	—	—	—	—	—	—	1(0/0)
move.l	ACC,Rx	1(0/0)	—	—	—	—	—	—	—
move.l	MACSR,CCR	1(0/0)	—	—	—	—	—	—	—
move.l	MACSR,Rx	1(0/0)	—	—	—	—	—	—	—
move.l	MASK,Rx	1(0/0)	—	—	—	—	—	—	—

2.7.2 Execution Timings—One-Operand Instructions

Table 2-13 shows standard timings for single-operand instructions.

Table 2-13. One-Operand Instruction Execution Times

Opcode	<ea>	Effective Address							
		Rn	(An)	(An)+	-(An)	(d16,An)	(d8,An,Xi*SF)	(xxx).wl	#xxx
clr.b	<ea>	1(0/0)	1(0/1)	1(0/1)	1(0/1)	1(0/1)	2(0/1)	1(0/1)	—
clr.w	<ea>	1(0/0)	1(0/1)	1(0/1)	1(0/1)	1(0/1)	2(0/1)	1(0/1)	—
clr.l	<ea>	1(0/0)	1(0/1)	1(0/1)	1(0/1)	1(0/1)	2(0/1)	1(0/1)	—
ext.w	Dx	1(0/0)	—	—	—	—	—	—	—
ext.l	Dx	1(0/0)	—	—	—	—	—	—	—
extb.l	Dx	1(0/0)	—	—	—	—	—	—	—
neg.l	Dx	1(0/0)	—	—	—	—	—	—	—
negx.l	Dx	1(0/0)	—	—	—	—	—	—	—
not.l	Dx	1(0/0)	—	—	—	—	—	—	—
scc	Dx	1(0/0)	—	—	—	—	—	—	—
swap	Dx	1(0/0)	—	—	—	—	—	—	—
tst.b	<ea>	1(0/0)	3(1/0)	3(1/0)	3(1/0)	3(1/0)	4(1/0)	3(1/0)	1(0/0)
tst.w	<ea>	1(0/0)	3(1/0)	3(1/0)	3(1/0)	3(1/0)	4(1/0)	3(1/0)	1(0/0)
tst.l	<ea>	1(0/0)	2(1/0)	2(1/0)	2(1/0)	2(1/0)	3(1/0)	2(1/0)	1(0/0)

2.7.3 Execution Timings—Two-Operand Instructions

Table 2-14 shows standard timings for two-operand instructions.

Table 2-14. Two-Operand Instruction Execution Times

Opcode	<ea>	Effective Address							
		Rn	(An)	(An)+	–(An)	(d16,An)	(d8,An,Xi*SF)	(xxx).wl	#<xxx>
add.l	<ea>,Rx	1(0/0)	3(1/0)	3(1/0)	3(1/0)	3(1/0)	4(1/0)	3(1/0)	1(0/0)
add.l	Dy,<ea>	—	3(1/1)	3(1/1)	3(1/1)	3(1/1)	4(1/1)	3(1/1)	—
addi.l	#imm,Dx	1(0/0)	—	—	—	—	—	—	—
addq.l	#imm,<ea>	1(0/0)	3(1/1)	3(1/1)	3(1/1)	3(1/1)	4(1/1)	3(1/1)	—
addx.l	Dy,Dx	1(0/0)	—	—	—	—	—	—	—
and.l	<ea>,Rx	1(0/0)	3(1/0)	3(1/0)	3(1/0)	3(1/0)	4(1/0)	3(1/0)	1(0/0)
and.l	Dy,<ea>	—	3(1/1)	3(1/1)	3(1/1)	3(1/1)	4(1/1)	3(1/1)	—
andi.l	#imm,Dx	1(0/0)	—	—	—	—	—	—	—
asl.l	<ea>,Dx	1(0/0)	—	—	—	—	—	—	1(0/0)
asr.l	<ea>,Dx	1(0/0)	—	—	—	—	—	—	1(0/0)
bchg	Dy,<ea>	2(0/0)	4(1/1)	4(1/1)	4(1/1)	4(1/1)	5(1/1)	4(1/1)	—
bchg	#imm,<ea>	2(0/0)	4(1/1)	4(1/1)	4(1/1)	4(1/1)	—	—	—

Table 2-14. Two-Operand Instruction Execution Times (continued)

Opcode	<ea>	Effective Address							
		Rn	(An)	(An)+	–(An)	(d16,An)	(d8,An,Xi*SF)	(xxx).wl	#<xxx>
bclr	Dy,<ea>	2(0/0)	4(1/1)	4(1/1)	4(1/1)	4(1/1)	5(1/1)	4(1/1)	—
bclr	#imm,<ea>	2(0/0)	4(1/1)	4(1/1)	4(1/1)	4(1/1)	—	—	—
bset	Dy,<ea>	2(0/0)	4(1/1)	4(1/1)	4(1/1)	4(1/1)	5(1/1)	4(1/1)	—
bset	#imm,<ea>	2(0/0)	4(1/1)	4(1/1)	4(1/1)	4(1/1)	—	—	—
btst	Dy,<ea>	1(0/0)	3(1/0)	3(1/0)	3(1/0)	3(1/0)	4(1/0)	3(1/0)	—
btst	#imm,<ea>	1(0/0)	3(1/0)	3(1/0)	3(1/0)	3(1/0)	—	—	—
cmp.l	<ea>,Rx	1(0/0)	3(1/0)	3(1/0)	3(1/0)	3(1/0)	4(1/0)	3(1/0)	1(0/0)
cmpi.l	#imm,Dx	1(0/0)	—	—	—	—	—	—	—
divs.w	<ea>,Dx	20(0/0)	23(1/0)	23(1/0)	23(1/0)	23(1/0)	24(1/0)	23(1/0)	20(0/0)
divu.w	<ea>,Dx	20(0/0)	23(1/0)	23(1/0)	23(1/0)	23(1/0)	24(1/0)	23(1/0)	20(0/0)
divs.l	<ea>,Dx	35(0/0)	38(1/0)	38(1/0)	38(1/0)	38(1/0)	—	—	—
divu.l	<ea>,Dx	35(0/0)	38(1/0)	38(1/0)	38(1/0)	38(1/0)	—	—	—
eor.l	Dy,<ea>	1(0/0)	3(1/1)	3(1/1)	3(1/1)	3(1/1)	4(1/1)	3(1/1)	—
eori.l	#imm,Dx	1(0/0)	—	—	—	—	—	—	—
lea	<ea>,Ax	—	1(0/0)	—	—	1(0/0)	2(0/0)	1(0/0)	—
lsl.l	<ea>,Dx	1(0/0)	—	—	—	—	—	—	1(0/0)
lsr.l	<ea>,Dx	1(0/0)	—	—	—	—	—	—	1(0/0)
mac.w	Ry,Rx	1(0/0)	—	—	—	—	—	—	—
mac.l	Ry,Rx	3(0/0)	—	—	—	—	—	—	—
msac.w	Ry,Rx	1(0/0)	—	—	—	—	—	—	—
msac.l	Ry,Rx	3(0/0)	—	—	—	—	—	—	—
mac.w	Ry,Rx,ea,Rw	—	3(1/0)	3(1/0)	3(1/0)	3(1/0)	—	—	—
mac.l	Ry,Rx,ea,Rw	—	5(1/0)	5(1/0)	5(1/0)	5(1/0)	—	—	—
moveq	#imm,Dx	—	—	—	—	—	—	—	1(0/0)
msac.w	Ry,Rx,ea,Rw	—	3(1/0)	3(1/0)	3(1/0)	3(1/0)	—	—	—
msac.l	Ry,Rx,ea,Rw	—	5(1/0)	5(1/0)	5(1/0)	5(1/0)	—	—	—
muls.w	<ea>,Dx	4(0/0)	6(1/0)	6(1/0)	6(1/0)	6(1/0)	7(1/0)	6(1/0)	4(0/0)
mulu.w	<ea>,Dx	4(0/0)	6(1/0)	6(1/0)	6(1/0)	6(1/0)	8(1/0)	6(1/0)	4(0/0)
muls.l	<ea>,Dx	6(0/0)	8(1/0)	8(1/0)	8(1/0)	8(1/0)	—	—	—
mulu.l	<ea>,Dx	6(0/0)	8(1/0)	8(1/0)	8(1/0)	8(1/0)	—	—	—
or.l	<ea>,Rx	1(0/0)	3(1/0)	3(1/0)	3(1/0)	3(1/0)	4(1/0)	3(1/0)	1(0/0)
or.l	Dy,<ea>	—	3(1/1)	3(1/1)	3(1/1)	3(1/1)	4(1/1)	3(1/1)	—
or.l	#imm,Dx	1(0/0)	—	—	—	—	—	—	—
rems.l	<ea>,Dx	35(0/0)	38(1/0)	38(1/0)	38(1/0)	38(1/0)	—	—	—
remu.l	<ea>,Dx	35(0/0)	38(1/0)	38(1/0)	38(1/0)	38(1/0)	—	—	—
sub.l	<ea>,Rx	1(0/0)	3(1/0)	3(1/0)	3(1/0)	3(1/0)	4(1/0)	3(1/0)	1(0/0)

Table 2-14. Two-Operand Instruction Execution Times (continued)

Opcode	<ea>	Effective Address							
		Rn	(An)	(An)+	–(An)	(d16,An)	(d8,An,Xi*SF)	(xxx).wl	#<xxx>
sub.l	Dy,<ea>	—	3(1/1)	3(1/1)	3(1/1)	3(1/1)	4(1/1)	3(1/1)	—
subi.l	#imm,Dx	1(0/0)	—	—	—	—	—	—	—
subq.l	#imm,<ea>	1(0/0)	3(1/1)	3(1/1)	3(1/1)	3(1/1)	4(1/1)	3(1/1)	—
subx.l	Dy,Dx	1(0/0)	—	—	—	—	—	—	—

2.7.4 Miscellaneous Instruction Execution Times

Table 2-15 lists timings for miscellaneous instructions.

Table 2-15. Miscellaneous Instruction Execution Times

Opcode	<ea>	Effective Address							
		Rn	(An)	(An)+	–(An)	(d16,An)	(d8,An,Xi*SF)	(xxx).wl	#<xxx>
cpushl	(Ax)	—	11(0/1)	—	—	—	—	—	—
link.w	Ay,#imm	2(0/1)	—	—	—	—	—	—	—
move.w	CCR,Dx	1(0/0)	—	—	—	—	—	—	—
move.w	<ea>,CCR	1(0/0)	—	—	—	—	—	—	1(0/0)
move.w	SR,Dx	1(0/0)	—	—	—	—	—	—	—
move.w	<ea>,SR	7(0/0)	—	—	—	—	—	—	7(0/0)
movec	Ry,Rc	9(0/1)	—	—	—	—	—	—	—
movem.l [1]	<ea>,&list	—	1+n(n/0)	—	—	1+n(n/0)	—	—	—
movem.l	&list,<ea>	—	1+n(0/n)	—	—	1+n(0/n)	—	—	—
nop		3(0/0)	—	—	—	—	—	—	—
pea	<ea>	—	2(0/1)	—	—	2(0/1)[2]	3(0/1)[3]	2(0/1)	—
pulse		1(0/0)	—	—	—	—	—	—	—
stop	#imm	—	—	—	—	—	—	—	3(0/0)[4]
trap	#imm	—	—	—	—	—	—	—	15(1/2)
trapf		1(0/0)	—	—	—	—	—	—	—
trapf.w		1(0/0)	—	—	—	—	—	—	—
trapf.l		1(0/0)	—	—	—	—	—	—	—
unlk	Ax	2(1/0)	—	—	—	—	—	—	—
wddata.l	<ea>	—	3(1/0)	3(1/0)	3(1/0)	3(1/0)	4(1/0)	3(1/0)	—
wdebug.l	<ea>	—	5(2/0)	—	—	5(2/0)	—	—	—

1 *n* is the number of registers moved by the MOVEM opcode.

2 PEA execution times are the same for (d16,PC).

3 PEA execution times are the same for (d8,PC,Xi*SF).

4 The execution time for STOP is the time required until the processor begins sampling continuously for interrupts.

2.7.5 Branch Instruction Execution Times

Table 2-16 shows general branch instruction timing.

Table 2-16. General Branch Instruction Execution Times

Opcode	<ea>	Effective Address							
		Rn	(An)	(An)+	–(An)	(d16,An)	(d8,An,Xi*SF)	(xxx).wl	#<xxx>
bra		—	—	—	—	2(0/1)	—	—	—
bsr		—	—	—	—	3(0/1)	—	—	—
jmp	<ea>	—	3(0/0)	—	—	3(0/0)	4(0/0)	3(0/0)	—
jsr	<ea>	—	3(0/1)	—	—	3(0/1)	4(0/1)	3(0/1)	—
rte		—	—	10(2/0)	—	—	—	—	—
rts		—	—	5(1/0)	—	—	—	—	—

Table 2-17 shows timing for Bcc instructions.

Table 2-17. Bcc Instruction Execution Times

Opcode	Forward Taken	Forward Not Taken	Backward Taken	Backward Not Taken
bcc	3(0/0)	1(0/0)	2(0/0)	3(0/0)

2.8 Exception Processing Overview

Exception processing for ColdFire processors is streamlined for performance. Differences from previous M68000 family processors include the following:

- A simplified exception vector table
- Reduced relocation capabilities using the vector base register
- A single exception stack frame format
- Use of a single, self-aligning system stack pointer

ColdFire processors use an instruction restart exception model but require more software support to recover from certain access errors. See Table 2-18 for details.

Exception processing can be defined as the time from the detection of the fault condition until the fetch of the first handler instruction has been initiated. It is comprised of the following four major steps:

1. The processor makes an internal copy of the SR and then enters supervisor mode by setting SR[S] and disabling trace mode by clearing SR[T]. The occurrence of an interrupt exception also forces SR[M] to be cleared and the interrupt priority mask to be set to the level of the current interrupt request.
2. The processor determines the exception vector number. For all faults except interrupts, the processor performs this calculation based on the exception type. For interrupts, the processor performs an interrupt-acknowledge (IACK) bus cycle to obtain the vector number from a peripheral device. The IACK cycle is mapped to a special acknowledge address space with the interrupt level encoded in the address.

3. The processor saves the current context by creating an exception stack frame on the system stack. ColdFire processors support a single stack pointer in the A7 address register; therefore, there is no notion of separate supervisor and user stack pointers. As a result, the exception stack frame is created at a 0-modulo-4 address on the top of the current system stack. Additionally, the processor uses a simplified fixed-length stack frame for all exceptions. The exception type determines whether the program counter in the exception stack frame defines the address of the faulting instruction (fault) or of the next instruction to be executed (next).
4. The processor acquires the address of the first instruction of the exception handler. The exception vector table is aligned on a 1-Mbyte boundary. This instruction address is obtained by fetching a value from the table at the address defined in the vector base register. The index into the exception table is calculated as 4 x vector_number. When the index value is generated, the vector table contents determine the address of the first instruction of the desired handler. After the fetch of the first opcode of the handler is initiated, exception processing terminates and normal instruction processing continues in the handler.

ColdFire processors support a 1024-byte vector table aligned on any 1-Mbyte address boundary; see Table 2-18. The table contains 256 exception vectors where the first 64 are defined by Freescale; the remaining 192 are user-defined interrupt vectors.

Table 2-18. Exception Vector Assignments

Vector Numbers	Vector Offset (Hex)	Stacked Program Counter [1]	Assignment
0	000	—	Initial stack pointer
1	004	—	Initial program counter
2	008	Fault	Access error
3	00C	Fault	Address error
4	010	Fault	Illegal instruction
5	014	Fault	Divide by zero
6–7	018–01C	—	Reserved
8	020	Fault	Privilege violation
9	024	Next	Trace
10	028	Fault	Unimplemented line-a opcode
11	02C	Fault	Unimplemented line-f opcode
12	030	Next	Debug interrupt
13	034	—	Reserved
14	038	Fault	Format error
15	03C	Next	Uninitialized interrupt
16–23	040–05C	—	Reserved
24	060	Next	Spurious interrupt
25–31	064–07C	Next	Level 1–7 autovectored interrupts
32–47	080–0BC	Next	Trap #0–15 instructions
48–60	0C0–0F0	—	Reserved

Table 2-18. Exception Vector Assignments (continued)

Vector Numbers	Vector Offset (Hex)	Stacked Program Counter [1]	Assignment
61	0F4	Fault	Unsupported instruction
62–63	0F8–0FC	—	Reserved
64–255	100–3FC	Next	User-defined interrupts

[1] The term 'fault' refers to the PC of the instruction that caused the exception. The term 'next' refers to the PC of the instruction that immediately follows the instruction that caused the fault.

ColdFire processors inhibit sampling for interrupts during the first instruction of all exception handlers. This allows any handler to effectively disable interrupts, if necessary, by raising the interrupt mask level contained in the status register.

2.8.1 Exception Stack Frame Definition

The exception stack frame is shown in Figure 2-10. The first longword of the exception stack frame contains the 16-bit format/vector word (F/V) and the 16-bit status register. The second longword contains the 32-bit program counter address.

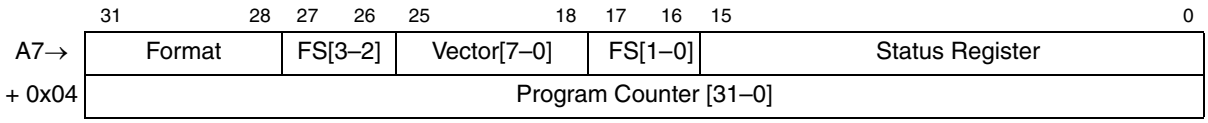

Figure 2-10. Exception Stack Frame Form

The 16-bit format/vector word contains three unique fields:

- Format field—This 4-bit field at the top of the system stack is always written with a value of {4,5,6,7} by the processor indicating a 2-longword frame format. See Table 2-19. This field records any longword misalignment of the stack pointer that may have existed when the exception occurred.

Table 2-19. Format Field Encoding

Original A7 at Time of Exception, Bits 1–0	A7 at First Instruction of Handler	Format Field Bits 31–28
00	Original A[7–8]	0100
01	Original A[7–9]	0101
10	Original A[7–10]	0110
11	Original A[7–11]	0111

- Fault status field—The 4-bit field, FS[3–0], at the top of the system stack is defined for access and address errors along with interrupted debug service routines. See Table 2-20.

Table 2-20. Fault Status Encodings

FS[3–0]	Definition
0000-001x	Reserved
0100	Error on instruction fetch
0101–011x	Reserved
1000	Error on operand write
1001	Attempted write to write-protected space
101x	Reserved
1100	Error on operand read
1101–111x	Reserved

- Vector number—This 8-bit field, vector[7–0], defines the exception type. It is calculated by the processor for internal faults and is supplied by the peripheral for interrupts. See Table 2-18.

2.8.2 Processor Exceptions

Table 2-21 describes MCF5272 exceptions.

Table 2-21. MCF5272 Exceptions

Exception	Description
Access Error	Caused by an error when accessing memory. For an access error on an instruction fetch, the processor postpones the error reporting until the instruction at the faulted reference is executed. Thus, faults that occur during instruction prefetches that are followed by a change of instruction flow do not generate an exception. When the processor attempts to execute an instruction with a faulted opword or extension word, the access error is signaled, and the instruction is aborted. For this type of exception, the programming model is not altered by the faulted instruction. If an access error occurs on an operand read, the processor immediately aborts the current instruction execution and initiates exception processing. In this case, any address register changes caused by the auto-addressing modes, (An)+ and -(An), have already occurred. In addition, if an access error occurs during the execution of a MOVEM instruction loading from memory, registers updated before the fault occurs contain the memory operand. Due to the processor pipeline implementation, a write cycle may be decoupled from the execution of the instruction causing the write. Thus, if an access error occurs on an operand write, the signaling of the error is imprecise. Accordingly, the PC contained in the exception stack frame represents the location in the program when the access error is signaled, not necessarily the instruction causing the fault. All programming model updates associated with the write instruction are complete. The NOP instruction can be used to help identify write access errors. A NOP is not executed until all previous operations, including any pending writes are complete. Thus if any previous write terminates with an access error, it is guaranteed to be reported on the NOP.
Address Error	Caused by an attempted execution transferring control to an odd instruction address (that is, if bit 0 of the target address is set), an attempted use of a word-sized index register (Xi.w) or a scale factor of 8 on an indexed effective addressing mode, or attempted execution of an instruction with a full-format indexed addressing mode.

Table 2-21. MCF5272 Exceptions (continued)

Exception	Description
Illegal Instruction	On Version 2 ColdFire implementations, only some illegal opcodes (0x0000 and 0x4AFC) are decoded and generate an illegal instruction exception. Additionally, attempting to execute an illegal line A or line F opcode generates unique exception types: vectors 10 and 11, respectively. If any other nonsupported opcode is executed, the resulting operation is undefined. ColdFire processors do not provide illegal instruction detection on extension words of any instruction, including MOVEC. Attempting to execute an instruction with an illegal extension word causes undefined results.
Divide by Zero	Attempted division by zero causes an exception (vector 5, offset = 0x014) except when the PC points to the faulting instruction (DIVU, DIVS, REMU, REMS).
Privilege Violation	Caused by attempted execution of a supervisor mode instruction while in user mode. The *ColdFire Programmer's Reference Manual* lists supervisor- and user-mode instructions.
Trace Exception	ColdFire processors provide instruction-by-instruction tracing. While the processor is in trace mode (SR[T] = 1), instruction completion signals a trace exception. This allows a debugger to monitor program execution. The only exception to this definition is the STOP instruction. If the processor is in trace mode, the instruction before the STOP executes and then generates a trace exception. In the exception stack frame, the PC points to the STOP opcode. When the trace handler is exited, the STOP instruction is executed, loading the SR with the immediate operand from the instruction. The processor then generates a trace exception. The PC in the exception stack frame points to the instruction after STOP, and the SR reflects the just-loaded value. If the processor is not in trace mode and executes a STOP instruction where the immediate operand sets the trace bit in the SR, hardware loads the SR and generates a trace exception. The PC in the exception stack frame points to the instruction after STOP, and the SR reflects the just-loaded value. Because ColdFire processors do not support hardware stacking of multiple exceptions, it is the responsibility of the operating system to check for trace mode after processing other exception types. As an example, consider a TRAP instruction executing in trace mode. The processor initiates the TRAP exception and passes control to the corresponding handler. If the system requires that a trace exception be processed, the TRAP exception handler must check for this condition (SR[15] in the exception stack frame asserted) and pass control to the trace handler before returning from the original exception.
Debug Interrupt	Caused by a hardware breakpoint register trigger. Rather than generating an IACK cycle, the processor internally calculates the vector number (12). Additionally, the M bit and the interrupt priority mask fields of the SR are unaffected by the interrupt. See Section 2.2.2.1, "Status Register (SR)."
RTE and Format Error Exceptions	When an RTE instruction executes, the processor first examines the 4-bit format field to validate the frame type. For a ColdFire processor, any attempted execution of an RTE where the format is not equal to {4,5,6,7} generates a format error. The exception stack frame for the format error is created without disturbing the original exception frame and the stacked PC points to RTE.The selection of the format value provides limited debug support for porting code from M68000 applications. On M68000 Family processors, the SR was at the top of the stack. Bit 30 of the longword addressed by the system stack pointer is typically zero; so, attempting an RTE using this old format generates a format error on a ColdFire processor. If the format field defines a valid type, the processor does the following: 1 Reloads the SR operand. 2 Fetches the second longword operand. 3 Adjusts the stack pointer by adding the format value to the auto-incremented address after the first longword fetch. 4 Transfers control to the instruction address defined by the second longword operand in the stack frame.
TRAP	Executing TRAP always forces an exception and is useful for implementing system calls. The trap instruction may be used to change from user to supervisor mode.

Table 2-21. MCF5272 Exceptions (continued)

Exception	Description
Interrupt Exception	Interrupt exception processing, with interrupt recognition and vector fetching, includes uninitialized and spurious interrupts as well as those where the requesting device supplies the 8-bit interrupt vector.
Reset Exception	Asserting the reset input signal ($\overline{\text{RSTI}}$) causes a reset exception. Reset has the highest exception priority; it provides for system initialization and recovery from catastrophic failure. When assertion of $\overline{\text{RSTI}}$ is recognized, current processing is aborted and cannot be recovered. The reset exception places the processor in supervisor mode by setting SR[S] and disables tracing by clearing SR[T]. This exception also clears SR[M] and sets the processor's interrupt priority mask in the SR to the highest level (level 7). Next, the VBR is initialized to 0x0000_0000. Configuration registers controlling the operation of all processor-local memories (cache and RAM modules on the MCF5272) are invalidated, disabling the memories. **Note:** Other implementation-specific supervisor registers are also affected. Refer to each of the modules in this manual for details on these registers. If the processor is not halted and it has ownership of the bus, it initiates the reset exception by performing two longword read bus cycles. The longword at address 0 is loaded into the stack pointer and the longword at address 4 is loaded into the PC. After the initial instruction is fetched from memory, program execution begins at the address in the PC. If an access error or address error occurs before the first instruction executes, the processor enters the fault-on-fault halted state.

If a ColdFire processor encounters any type of fault during the exception processing of another fault, the processor immediately halts execution with the catastrophic fault-on-fault condition. A reset is required to force the processor to exit this halted state.

Chapter 3
Hardware Multiply/Accumulate (MAC) Unit

This chapter describes the MCF5272 multiply/accumulate (MAC) unit, which executes integer multiply, multiply-accumulate, and miscellaneous register instructions. The MAC is integrated into the operand execution pipeline (OEP).

3.1 Overview

The MAC unit provides hardware support for a limited set of digital signal processing (DSP) operations used in embedded code, while supporting the integer multiply instructions in the ColdFire microprocessor family.

The MAC unit provides signal processing capabilities for the MCF5272 in a variety of applications including digital audio and servo control. Integrated as an execution unit in the processor's OEP, the MAC unit implements a three-stage arithmetic pipeline optimized for 16 x 16 multiplies. Both 16- and 32-bit input operands are supported by this design in addition to a full set of extensions for signed and unsigned integers plus signed, fixed-point fractional input operands.

The MAC unit provides functionality in three related areas:

- Signed and unsigned integer multiplies
- Multiply-accumulate operations supporting signed, unsigned, and signed fractional operands
- Miscellaneous register operations

Each of the three areas of support is addressed in detail in the succeeding sections. Logic that supports this functionality is contained in a MAC module, as shown in Figure 3-1.

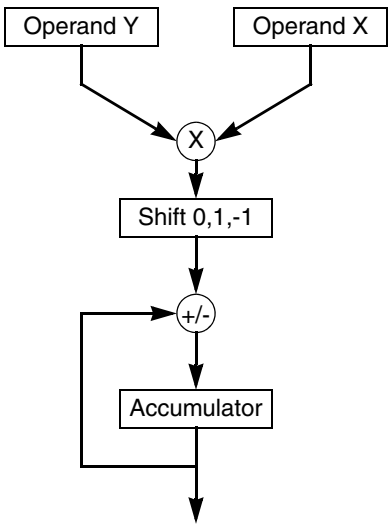

Figure 3-1. ColdFire MAC Multiplication and Accumulation

The MAC unit is tightly coupled to the OEP and features a three-stage execution pipeline. To minimize silicon costs, the ColdFire MAC is optimized for 16 x 16 multiply instructions. The OEP can issue a 16 x 16 multiply with a 32-bit accumulation and fetch a 32-bit operand in the same cycle. A 32 x 32 multiply with a 32-bit accumulation takes three cycles before the next instruction can be issued. Figure 3-1 shows the basic functionality of the ColdFire MAC. A full set of instructions is provided for signed and unsigned integers plus signed, fixed-point, fractional input operands.

The MAC unit is an extension of the basic multiplier found on most microprocessors. It can perform operations native to signal processing algorithms in an acceptable number of cycles, given the application constraints. For example, small digital filters can tolerate some variance in the execution time of the algorithm; larger, more complicated algorithms such as orthogonal transforms may have more demanding speed requirements exceeding the scope of any processor architecture and requiring a fully developed DSP implementation.

The M68000 architecture was not designed for high-speed signal processing, and a large DSP engine would be excessive in an embedded environment. In striking a middle ground between speed, size, and functionality, the ColdFire MAC unit is optimized for a small set of operations that involve multiplication and cumulative additions. Specifically, the multiplier array is optimized for single-cycle, 16 x 16 multiplies producing a 32-bit result, with a possible accumulation cycle following. This is common in a large portion of signal processing applications. In addition, the ColdFire core architecture has been modified to allow for an operand fetch in parallel with a multiply, increasing overall performance for certain DSP operations.

3.1.1 MAC Programming Model

Figure 3-2 shows the registers in the MAC portion of the user programming model.

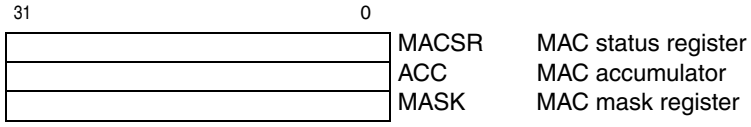

Figure 3-2. MAC Programming Model

These registers are described as follows:

- Accumulator (ACC)—This 32-bit, read/write, general-purpose register is used to accumulate the results of MAC operations.
- Mask register (MASK)—This 16-bit general-purpose register provides an optional address mask for MAC instructions that fetch operands from memory. It is useful in the implementation of circular queues in operand memory.
- MAC status register (MACSR)—This 8-bit register defines configuration of the MAC unit and contains indicator flags affected by MAC instructions. Unless noted otherwise, the setting of MACSR indicator flags is based on the final result, that is, the result of the final operation involving the product and accumulator.

3.1.2 General Operation

The MAC unit supports the ColdFire integer multiply instructions (MULS and MULU) and provides additional functionality for multiply-accumulate operations. The added MAC instructions to the ColdFire ISA provide for the multiplication of two numbers, followed by the addition or subtraction of this number to or from the value contained in the accumulator. The product may be optionally shifted left or right one bit before the addition or subtraction takes place. Hardware support for saturation arithmetic may be enabled to minimize software overhead when dealing with potential overflow conditions using signed or unsigned operands.

These MAC operations treat the operands as one of the following formats:

- Signed integers
- Unsigned integers
- Signed, fixed-point, fractional numbers

To maintain compactness, the MAC module is optimized for 16-bit multiplications. Two 16-bit operands produce a 32-bit product. Longword operations are performed by reusing the 16-bit multiplier array at the expense of a small amount of extra control logic. Again, the product of two 32-bit operands is a 32-bit result. For longword integer operations, only the least significant 32 bits of the product are calculated. For fractional operations, the entire 63-bit product is calculated and then either truncated or rounded to a 32-bit result using the round-to-nearest (even) method.

Because the multiplier array is implemented in a 3-stage pipeline, MAC instructions can have an effective issue rate of one clock for word operations, three for longword integer operations, and four for 32-bit fractional operations. Arithmetic operations use register-based input operands, and summed values are stored internally in the accumulator. Thus, an additional MOVE instruction is necessary to store data in a general-purpose register. MAC instructions can choose the upper or lower word of a register as the input, which helps filtering operations in which one data register is loaded with input data and another is loaded with coefficient data. Two 16-bit MAC operations can be performed without fetching additional operands between instructions by alternating the word choice during the calculations.

The need to move large amounts of data quickly can limit throughput in DSP engines. However, data can be moved efficiently by using the MOVEM instruction, which automatically generates line-sized burst references and is ideal for filling registers quickly with input data, filter coefficients, and output data. Loading an operand from memory into a register during a MAC operation makes some DSP operations, especially filtering and convolution, more manageable.

The MACSR has a 4-bit operational mode field and three condition flags. The operational mode bits control the overflow/saturation mode, whether operands are signed or unsigned, whether operands are treated as integers or fractions, and how rounding is performed. Negative, zero, and overflow flags are also provided.

The three program-visible MAC registers, a 32-bit accumulator (ACC), the MAC mask register (MASK), and MACSR, are described in Section 3.1.1, “MAC Programming Model.”

3.1.3 MAC Instruction Set Summary

The MAC unit supports the integer multiply operations defined by the baseline ColdFire architecture and the new multiply-accumulate instructions. Table 3-1 summarizes the MAC unit instruction set.

Table 3-1. MAC Instruction Summary

Instruction	Mnemonic	Description
Multiply Signed	MULS <ea>y,Dx	Multiplies two signed operands yielding a signed result
Multiply Unsigned	MULU <ea>y,Dx	Multiplies two unsigned operands yielding an unsigned result
Multiply Accumulate	MAC Ry,RxSF MSAC Ry,RxSF	Multiplies two operands, then adds or subtracts the product to/from the accumulator
Multiply Accumulate with Load	MAC Ry,RxSF,Rw MSAC Ry,RxSF,Rw	Multiplies two operands, then adds or subtracts the product to/from the accumulator while loading a register with the memory operand
Load Accumulator	MOV.L {Ry,#imm},ACC	Loads the accumulator with a 32-bit operand
Store Accumulator	MOV.L ACC,Rx	Writes the contents of the accumulator to a register
Load MACSR	MOV.L {Ry,#imm},MACSR	Writes a value to the MACSR
Store MACSR	MOV.L MACSR,Rx	Writes the contents of MACSR to a register
Store MACSR to CCR	MOV.L MACSR,CCR	Writes the contents of MACSR to the processor's CCR register
Load MASK	MOV.L {Ry,#imm},MASK	Writes a value to MASK
Store MASK	MOV.L MASK,Rx	Writes the contents of MASK to a register

3.1.4 Data Representation

The MAC unit supports three basic operand types:

- Two's complement signed integer: In this format, an N-bit operand represents a number within the range $-2^{(N-1)} \leq$ operand $\leq 2^{(N-1)} - 1$. The binary point is to the right of the least significant bit.
- Two's complement unsigned integer: In this format, an N-bit operand represents a number within the range $0 \leq$ operand $\leq 2^N - 1$. The binary point is to the right of the least significant bit.
- Two's complement, signed fractional: In an N-bit number, the first bit is the sign bit. The remaining bits signify the first N-1 bits after the binary point. Given an N-bit number, $a_{N-1}a_{N-2}a_{N-3}\ldots a_2a_1a_0$, its value is given by the following formula:

$$+\sum_{i=0}^{N-2} 2^{(i+1-N)} \cdot ai$$

This format can represent numbers in the range $-1 \leq$ operand $\leq 1 - 2^{(N-1)}$.

For words and longwords, the greatest negative number that can be represented is –1, whose internal representation is 0x8000 and 0x0x8000_0000, respectively. The most positive word is 0x7FFF or $(1 - 2^{-15})$; the most positive longword is 0x7FFF_FFFF or $(1 - 2^{-31})$.

3.2 MAC Instruction Execution Timings

For information on MAC instruction execution timings, refer to Section 2.7, "Instruction Timing."

Chapter 4
Local Memory

This chapter describes the MCF5272 implementation of the ColdFire Version 2 core local memory specification. It consists of the following sections.

- Section 4.3, “SRAM Overview,” and Section 4.4, “ROM Overview,” describe the on-chip static RAM (SRAM) and ROM implementations. These chapters cover general operations, configuration, and initialization. They also provide information and examples showing how to minimize power consumption when using the ROM and SRAM.
- Section 4.5, “Instruction Cache Overview,” describes the cache implementation, including organization, configuration, and coherency. It describes cache operations and how the cache interfaces with other memory structures.

4.1 Interactions Between Local Memory Modules

Depending on configuration information, instruction fetches and data read accesses may be sent simultaneously to the SRAM, ROM, and cache controllers. This approach is required because the controllers are memory-mapped devices and the hit/miss determination is made concurrently with the read data access. Power dissipation can be minimized by configuring the ROM and SRAM base address registers (ROMBAR and RAMBAR) to mask unused address spaces whenever possible.

If the access address is mapped into the region defined by the SRAM (and this region is not masked), it provides the data back to the processor and any cache or ROM data is discarded. If the access address does not hit the SRAM, but is mapped into the region defined by the ROM (and this region is not masked), the ROM provides the data back to the processor and any cache data is discarded. Accesses from the SRAM and ROM modules are never cached. The complete definition of the processor’s local bus priority scheme for read references is as follows:

```
if (SRAM “hits”)
        SRAM supplies data to the processor
                if (ROM “hits”)
                        ROM supplies data to the processor
                                else if (cache “hits”)
                                        cache supplies data to the processor
                                                else system memory reference to access
data
```

4.2 Local Memory Registers

Table 4-1 lists the local memory registers. Note the following:

- Addresses not assigned to the register and undefined register bits are reserved. Write accesses to these bits have no effect; read accesses return zeros.
- The reset value column indicates the register initial value at reset. Uninitialized fields may contain random values after reset.

Table 4-1. Memory Map of Instruction Cache Registers

Address (using MOVEC)	Name	Width	Description	Reset Value
0x002	CACR	32	Cache control register	0x0000
0x004	ACR0	32	Access control register 0	0x0000
0x005	ACR1	32	Access control register 1	0x0000
0xC00	ROMBAR	32	ROM base address register	Uninitialized (except V = 0)
0xC04	RAMBAR	32	SRAM base address register	Uninitialized (except V = 0)

4.3 SRAM Overview

The SRAM module has the following features:

- 4-Kbyte SRAM, organized as 1K x 32 bits
- Single-cycle access
- Physically located on the ColdFire core's high-speed local bus
- Byte, word, longword address capabilities
- Programmable memory mapping

4.3.1 SRAM Operation

The SRAM module provides a general-purpose memory block the ColdFire core can access in a single cycle. The location of the memory block can be set to any 4-Kbyte address boundary within the 4-Gbyte address space. The memory is ideal for storing critical code or data structures or for use as the system stack. Because the SRAM module is physically connected to the processor's high-speed local bus, it can quickly service core-initiated accesses or memory-referencing commands from the debug module.

Section 4.1, “Interactions Between Local Memory Modules,” describes priorities when an access address hits multiple local memory resources.

4.3.2 SRAM Programming Model

The MCF5272 implements the SRAM base address register (RAMBAR), shown in Figure 4-1 and described in the following section.

4.3.2.1 SRAM Base Address Register (RAMBAR)

RAMBAR determines the base address location of the internal SRAM module, as well as the definition of the types of accesses allowed for it.

- RAMBAR is a 32-bit write-only supervisor control register. It is accessed in the CPU address space via the MOVEC instruction with an Rc encoding of 0xC04. RAMBAR can be read or written in background debug mode (BDM). At system reset, the V bit is cleared and the remaining bits are uninitialized. To access the SRAM module, RAMBAR must be written with the appropriate base address after system reset.
- The SRAM base address register (RAMBAR) can be accessed only in supervisor mode using the MOVEC instruction with an Rc value of 0xC04.

	31–12	11–9	8	7–6	5	4	3	2	1	0
Field	BA	—	WP	—	C/I	SC	SD	UC	UD	V
Reset	—									0
R/W	W for CPU; R/W for debug									
Address	CPU space + 0xC04									

Figure 4-1. SRAM Base Address Register (RAMBAR)

RAMBAR fields are described in Table 4-2.

Table 4-2. RAMBAR Field Description

Bits	Name	Description
31–12	BA	Base address. SRAM module base address. The SRAM module occupies a 4-Kbyte space defined by BA. SRAM can reside on any 4-Kbyte boundary in the 4-Gbyte address space.
11–9	—	Reserved, should be cleared.
8	WP	Write protect. Controls read/write properties of the SRAM. 0 Allows read and write accesses to the SRAM module. 1 Allows only read accesses to the SRAM module. Any attempted write reference generates an access error exception to the ColdFire processor core.
7–6	—	Reserved, should be cleared.
5–1	C/I, SC, SD, UC, UD	Address space masks (AS*n*). These fields allow certain types of accesses to be masked, or inhibited from accessing the SRAM module. These bits are useful for power management as described in Section 4.3.2.3, “Programming RAMBAR for Power Management.” In particular, C/I is typically set. The address space mask bits are follows: C/I = CPU space/interrupt acknowledge cycle mask. Note that C/I must be set if BA = 0. SC = Supervisor code address space mask SD = Supervisor data address space mask UC = User code address space mask UD = User data address space mask For each AS*n* bit: 0 An access to the SRAM module can occur for this address space 1 Disable this address space from the SRAM module. References to this address space cannot access the SRAM module and are processed like other non-SRAM references.
0	V	Valid. Enables/disables the SRAM module. V is cleared at reset. 0 RAMBAR contents are not valid. 1 RAMBAR contents are valid.

The mapping of a given access into the SRAM uses the following algorithm to determine if the access hits in the memory:

```
if (RAMBAR[0] = 1)
        if (requested address[31:12] = RAMBAR[31:12])
                if (address space mask of the requested type = 0)
                        Access is mapped to the SRAM module
                        if (access = read)
                                Read the SRAM and return the data
                        if (access = write)
                                if (RAMBAR[8] = 0)
                                        Write the data into the SRAM
                                else Signal a write-protect access error
```

4.3.2.2 SRAM Initialization

After a hardware reset, the contents of the SRAM module are undefined. The valid bit of RAMBAR is cleared, disabling the module. If the SRAM needs to be initialized with instructions or data, the following steps should be performed:

1. Load RAMBAR, mapping the SRAM module to the desired location.
2. Read the source data and write it to the SRAM. Various instructions support this function, including memory-to-memory MOVE instructions and the MOVEM opcode. The MOVEM instruction is optimized to generate line-sized burst fetches on 0-modulo-16 addresses, so this opcode generally provides the best performance.
3. After data is loaded into the SRAM, it may be appropriate to load a revised value into RAMBAR with new write-protect and address space mask attributes. These attributes consist of the write-protect and address-space mask fields.

The ColdFire processor or an external BDM emulator using the debug module can perform this initialization.

4.3.2.3 Programming RAMBAR for Power Management

Depending on the configuration defined by RAMBAR, instruction fetch accesses can be sent to the SRAM module, ROM module, and instruction cache simultaneously. If the access is mapped to the SRAM module, it sources the read data, discarding the instruction cache access. If the SRAM is used only for data operands, setting RAMBAR[SC,UC] lowers power dissipation by disabling the SRAM during all instruction fetches. Additionally, if the SRAM holds only instructions, setting RAMBAR[SD,UD] reduces power dissipation.

Consider the examples on Table 4-3 of typical RAMBAR settings:

Table 4-3. Examples of Typical RAMBAR Settings

Data Contained in SRAM	RAMBAR[7–0]
Instructions only	0x2B
Data only	0x35
Both instructions and data	0x21

ROMBAR can be configured similarly, as described in Section 4.4.2.2, “Programming ROMBAR for Power Management.”

4.4 ROM Overview

The ROM modules has the following features:

- 16-Kbyte ROM, organized as 4K x 32 bits
- Contains data tables for soft HDLC (high-level data link control)
- The ROM contents are not customizeable
- Single-cycle access
- Physically located on ColdFire core's high-speed local bus
- Byte, word, longword address capabilities
- Programmable memory mapping

4.4.1 ROM Operation

The ROM module contains tabular data that the ColdFire core can access in a single cycle. The ROM can be located on any 16-Kbyte address boundary in the 4-Gbyte address space. Section 4.1, “Interactions Between Local Memory Modules,” describes priorities when a fetch address hits multiple local memory resources.

4.4.2 ROM Programming Model

The MCF5272 implements the ROM base address register (ROMBAR), shown in Figure 4-2 and described in the following section.

4.4.2.1 ROM Base Address Register (ROMBAR)

ROMBAR determines the base address location of the internal ROM module, as well as the definition of the allowable access types. ROMBAR can be accessed in supervisor mode using the MOVEC instruction with an Rc value of 0xC00. It can also be read when the processor is in background debug mode (BDM). To access the ROM module, ROMBAR should be initialized with the appropriate base address.

	31–14	13–8	7–6	5	4	3	2	1	0
Field	BA	—	—	C/I	SC	SD	UC	UD	V
Reset	—		00	—	—	—	—	—	0
R/W	W for CPU; R/W for debug								
Address	CPU space + 0xC00								

Figure 4-2. ROM Base Address Register (ROMBAR)

ROMBAR fields are described in Table 4-4.

Table 4-4. ROMBAR Field Description

Bits	Name	Description
31–14	BA	Base address. Defines the ROM module base address. ROM can reside on any 16-Kbyte boundary in the 4-Gbyte address space.
13–6	—	Reserved, should be cleared.
5–1	C/I, SC, SD, UC, UD	Address space masks (AS*n*). Allows specific address spaces to be enabled or disabled, placing internal modules in a specific address space. If an address space is disabled, an access to the register in that address space becomes an external bus access, and the module resource is not accessed. These bits are useful for power management as described in Section 4.4.2.2, "Programming ROMBAR for Power Management." In particular, C/I is typically set. The address space mask bits are follows: C/I = CPU space/interrupt acknowledge cycle mask. Note that C/I must be set if BA = 0. SC = Supervisor code address space mask SD = Supervisor data address space mask UC = User code address space mask UD = User data address space mask For each AS*n* bit: 0 An access to the ROM module can occur for this address space 1 Disable this address space from the ROM module. References to this address space cannot access the ROM module and are processed like other non-ROM references.
0	V	Valid. Indicates whether ROMBAR contents are valid. The BA value is not used and the ROM module is not accessible until V is set. 0 Contents of ROMBAR are not valid. 1 Contents of ROMBAR are valid.

4.4.2.2 Programming ROMBAR for Power Management

Depending on the ROMBAR configuration, memory accesses can be sent to the ROM module and the cache simultaneously. If an access hits both, the ROM module sources read data and the instruction cache access is discarded. Because the ROM contains only for data, setting ROMBAR[SC,UC] lowers power dissipation by disabling the ROM during instruction fetches.

Table 4-5 shows typical ROMBAR settings:

Table 4-5. Examples of Typical ROMBAR Settings

Data Contained In ROM	ROMBAR[7–0]
Instructions only	0x2B
Data only	0x35
Both instructions and data	0x21

RAMBAR can be configured similarly, as described in Section 4.3.2.3, "Programming RAMBAR for Power Management."

4.5 Instruction Cache Overview

The features of the instruction cache are as follows:

- 1-Kbyte direct-mapped cache
- Single-cycle access on cache hits
- Physically located on ColdFire core's high-speed local bus
- Nonblocking design to maximize performance
- 16-byte line-fill buffer
- Configurable cache miss-fetch algorithm

4.5.1 Instruction Cache Physical Organization

The instruction cache, Figure 4-3, is a direct-mapped single-cycle memory, organized as 64 lines, each containing 16 bytes. Memory consists of a 64-entry tag array (containing addresses and a valid bit) and a 1-Kbyte instruction data array, organized as 64 x 128 bits.

The two memory arrays are accessed in parallel: bits 9–4 of the instruction fetch address provide the index into the tag array; bits 9–2 address the data array. The tag array outputs the address mapped to the given cache location along with the valid bit for the line. This address field is compared to bits 31–10 of the instruction fetch address from the local bus to determine if a cache hit in the memory array has occurred. If the desired address is mapped into the cache memory, the output of the data array is driven onto the ColdFire core's local data bus completing the access in a single cycle.

The tag array maintains a single valid bit per line entry. Accordingly, only entire 16-byte lines are loaded into the instruction cache.

The instruction cache also contains a 16-byte fill buffer that provides temporary storage for the last line fetched in response to a cache miss. With each instruction fetch, the contents of the line-fill buffer are examined. Thus, each instruction fetch address examines both the tag memory array and the line-fill buffer to see if the desired address is mapped into either hardware resource. A cache hit in either the memory array or the line-fill buffer is serviced in a single cycle. Because the line-fill buffer maintains valid bits on a longword basis, hits in the buffer can be serviced immediately without waiting for the entire line to be fetched.

If the referenced address is not contained in the memory array or the line-fill buffer, the instruction cache initiates the required external fetch operation. In most situations, this is a 16-byte line-sized burst reference.

Hardware is nonblocking, meaning the ColdFire core's local bus is released after the initial access of a miss. Thus, the cache, SRAM, or ROM module can service subsequent requests while the rest of the line is being fetched and loaded into the fill buffer.

Generally, longword references are used for sequential fetches. If the processor branches to an odd word address, a word-sized fetch is generated. The memory array of the instruction cache is enabled only if CACR[CENB] is asserted.

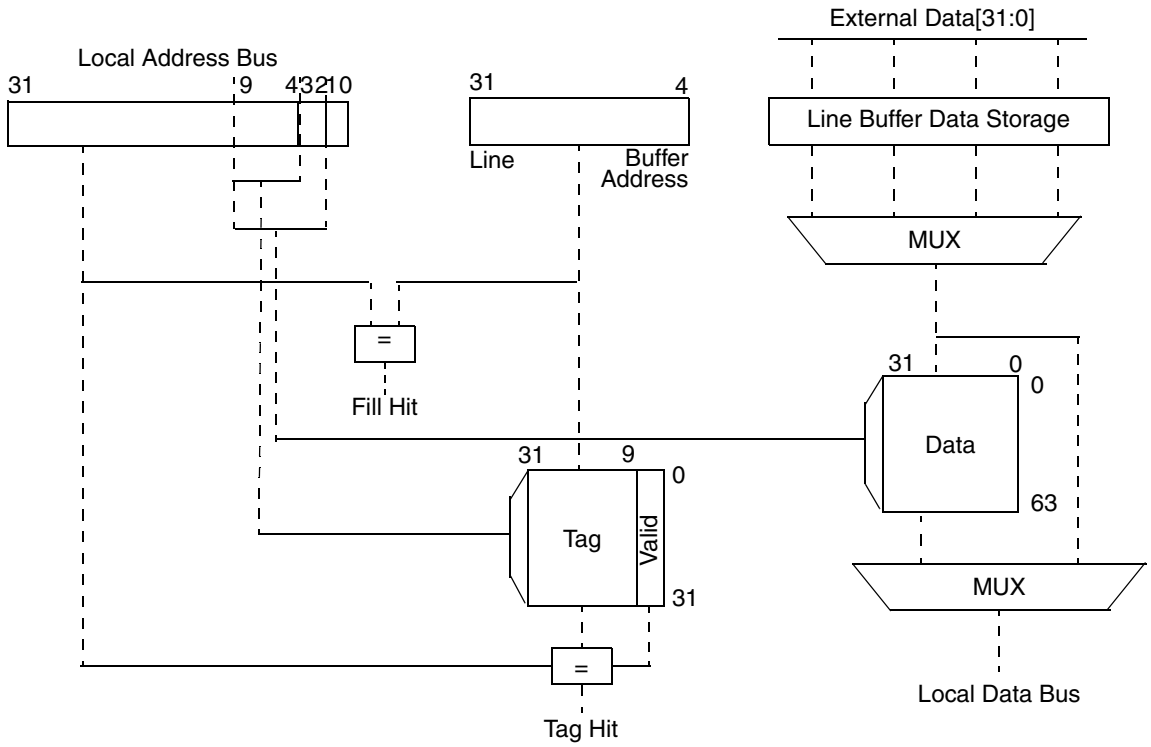

Figure 4-3. Instruction Cache Block Diagram

4.5.2 Instruction Cache Operation

The instruction cache is physically connected to the ColdFire core's local bus, allowing it to service all instruction fetches from the ColdFire core and certain memory fetches initiated by the debug module. Typically, the debug module's memory references appear as supervisor data accesses but the unit can be programmed to generate user-mode accesses and/or instruction fetches. The instruction cache processes any instruction fetch access in the normal manner.

4.5.2.1 Interaction with Other Modules

Because both the instruction cache and high-speed SRAM module are connected to the ColdFire core's local data bus, certain user-defined configurations can result in simultaneous instruction fetch processing.

If the referenced address is mapped into the SRAM module, that module services the request in a single cycle. In this case, data accessed from the instruction cache is discarded without generating external memory references. If the address is not mapped into SRAM space, the instruction cache handles the request in the normal fashion.

4.5.2.2 Cache Coherency and Invalidation

The instruction cache does not monitor ColdFire core data references for accesses to cached instructions. Therefore, software must maintain cache coherency by invalidating the appropriate cache entries after modifying code segments.

Cache invalidation can be performed in the two following ways:

- Setting CACR[CINVA] forces the entire instruction cache to be marked as invalid. The invalidation operation requires 64 cycles because the cache sequences through the entire tag array, clearing a single location each cycle. Any subsequent instruction fetch accesses are postponed until the invalidation sequence is complete.
- The privileged CPUSHL instruction can invalidate a single cache line. When this instruction is executed, the cache entry defined by bits 9–4 of the source address register is invalidated, provided CACR[CDPI] is cleared.

These invalidation operations can be initiated from the ColdFire core or the debug module.

4.5.2.3 Caching Modes

For every memory reference generated by the processor or debug module, a set of effective attributes is determined based on the address and the ACRs. Caching modes determine how the cache handles an access. An access can be cacheable or cache-inhibited. For normal accesses, the ACR*n*[CM] bit corresponding to the address of the access specifies the caching mode. If an address does not match an ACR, the default caching mode is defined by CACR[DCM]. The specific algorithm is as follows:

```
if (address == ACR0-address including mask)
         effective attributes = ACR0 attributes
else if (address == ACR1-address including mask)
                  effective attributes = ACR1 attributes
         else effective attributes = CACR default attributes
```

Addresses matching an ACR can also be write protected using ACR[WP].

Reset disables the cache and clears all CACR bits. Reset does not automatically invalidate cache entries; they must be invalidated through software.

The ACRs allow CACR defaults to be overridden. In addition, some instructions (for example, CPUSHL) and processor core operations perform accesses that have an implicit caching mode associated with them. The following sections discuss the different caching accesses and their associated cache modes.

4.5.2.3.1 Cacheable Accesses

If ACR*n*[CM] or the default field of the CACR indicates the access is cacheable, a read access is read from the cache if matching data is found. Otherwise, the data is read from memory and the cache is updated. When a line is being read from memory, the longword in the line that contains the core-requested data is loaded first and the requested data is given immediately to the processor, without waiting for the three remaining longwords to reach the cache.

4.5.2.3.2 Cache-Inhibited Accesses

Memory regions can be designated as cache-inhibited, which is useful for memory containing targets such as I/O devices and shared data structures in multiprocessing systems. Do not cache memory-mapped registers (for example, registers shown with an MBAR offset). If the corresponding ACR*n*[CM] or CACR[DCM] indicates cache-inhibited the access is cache-inhibited. The caching operation is identical for both cache-inhibited modes, which differ only regarding recovery from an external bus error.

In determining whether a memory location is cacheable or cache-inhibited, the CPU checks memory-control registers using the following priority:

1. RAMBAR
2. ROMBAR
3. ACR0
4. ACR1
5. If an access does not hit in RAMBAR, ROMBAR, or the ACRs, the default is provided for all accesses in CACR.

Cache-inhibited write accesses bypass the cache and a corresponding external write is performed. Cache-inhibited reads bypass the cache and are performed on the external bus, except when all of the following conditions are true:

- The cache-inhibited fill-buffer bit, CACR[CEIB], is set.
- The access is an instruction read.
- The access is normal (that is, TT = 0).

In this case, a fetched line is stored in the fill buffer and remains valid there; the cache can service additional read accesses from this buffer until another fill occurs or a cache-invalidate-all operation occurs.

If ACR*n*[CM] indicates cache-inhibited, the controller bypasses the cache and performs an external transfer. To ensure the consistency of cached data, execute a CPUSHL instruction or set CACR[CINVA] to invalidate the entire cache before switching cache modes.

CPU space-register accesses, such as MOVEC, are treated as cache-inhibited.

4.5.2.4 Reset

A hardware reset clears the CACR disabling the instruction cache.

NOTE

Tag array contents are not affected by reset. Accordingly, system startup code must explicitly invalidate the cache by setting CACR[CINVA] before the cache can be enabled.

4.5.2.5 Cache Miss Fetch Algorithm/Line Fills

As discussed in Section 4.5.1, “Instruction Cache Physical Organization,” the instruction cache hardware includes a 16-byte line-fill buffer for providing temporary storage for the last fetched instruction.

With the cache enabled as defined by CACR[CENB], a cacheable instruction fetch that misses in both the tag memory and the line-fill buffer generates an external fetch. The size of the external fetch is determined by the value contained in CACR[CLNF] and the miss address. Table 4-8 shows the relationships between the CLNF bits, the miss address, and the size of the external fetch.

Depending on the run-time characteristics of the application and the memory response speed, overall performance may be increased by programming CLNF to values {00, 01}.

For all cases of a line-sized fetch, the critical longword defined by miss address bits 3–2 is accessed first followed by the remaining three longwords that are accessed by incrementing the longword address in 0-modulo-16 increments, as shown below:

```
if miss address[3:2] = 00
        fetch sequence = {0x0, 0x4, 0x8, 0xC}
if miss address[3:2] = 01
        fetch sequence = {0x4, 0x8, 0xC, 0x0}
if miss address[3:2] = 10
        fetch sequence = {0x8, 0xC, 0x0, 0x4}
if miss address[3:2] = 11
        fetch sequence = {0xC, 0x0, 0x4, 0x0x8}
```

When an external fetch is initiated and data is loaded into the line-fill buffer, the instruction cache maintains a special most-recently-used indicator that tracks the contents of the fill buffer versus its corresponding cache location. At the time of the miss, the hardware indicator is set, marking the fill buffer as most recently used. If a subsequent access occurs to the cache location defined by bits 9–4 of the fill buffer address, the data in the cache memory array is now most-recently used, so the hardware indicator is cleared. In all cases, the indicator defines whether the contents of the line-fill buffer or the cache memory data array are most recently used. If the entire line is present at the time of the next cache miss, the line-fill buffer contents are written into the cache memory array and the fill buffer data is still most recently used compared to the cache memory array.

The fill buffer can also be used as temporary storage for line-sized bursts of non-cacheable references under control of CACR[CEIB]. With this bit set, a noncacheable instruction fetch is processed as defined by Table 4-6. For this condition, the fill buffer is loaded and subsequent references can hit in the buffer, but the data is never loaded into the cache memory array.

Table 4-6 shows the relationship between CENB, CEIB, and the type of instruction fetch.

Table 4-6. Instruction Cache Operation as Defined by CACR[CENB,CEIB]

CACR[CENB,CEIB]	Type of Fetch	Description
00	N/A	Instruction cache and line-fill buffer are disabled; fetches are word or longword in size.
01	N/A	Instruction cache is disabled but because the line-fill buffer is enabled, CACR[CLNF] defines fetch size and instructions can be bursted into the line-fill buffer.
1X	Cacheable	Cache is enabled; CACR[CLNF] defines fetch size and line-fill buffer contents can be written into the cache memory array.
10	Noncacheable	Cache is enabled but the linefill buffer is disabled; fetches are either word or longword and are not loaded into the line-fill buffer.
11	Noncacheable	Cache and line buffer are enabled; CACR[CLNF] defines fetch size; fetches are loaded into the line-fill buffer but never into the cache memory array.

4.5.3 Instruction Cache Programming Model

Three supervisor registers define the operation of the instruction cache and local bus controller: the cache control register (CACR) and two access control registers (ACR0, ACR1). Table 4-7 shows the memory map of the CACR and ACRs. These registers have the following characteristics:

- The CACR and ACRs can be accessed only in supervisor mode using the MOVEC instruction with an Rc value of 0x002 (CACR), 0x004 (ACR0), and 0x005 (ACR1).
- Addresses not assigned to the registers and undefined register bits are reserved for future expansion. Write accesses to these reserved address spaces and reserved register bits have no effect; read accesses return zeros.
- The reset value column indicates the initial value of the register at reset. Uninitialized fields may contain random values after reset.
- The access column indicates whether the corresponding register can be read, written or both. Attempts to read a write-only register cause zeros to be returned. Attempts to write to a read-only register are ignored.

Table 4-7. Memory Map of Instruction Cache Registers

Address (using MOVEC)	Name	Width	Description	Reset Value
0x002	CACR	32	Cache control register	0x0000
0x004	ACR0	32	Access control register 0	0x0000
0x005	ACR1	32	Access control register 1	0x0000

4.5.3.1 Cache Control Register (CACR)

The CACR controls operation of the instruction cache. It provides a set of default memory access attributes for when a reference address does not map into spaces defined by the ACRs. The supervisor-level CACR is accessed in the CPU address space using the MOVEC instruction with an Rc encoding of 0x002. The CACR can be read or written when the processor is in background debug mode (BDM).

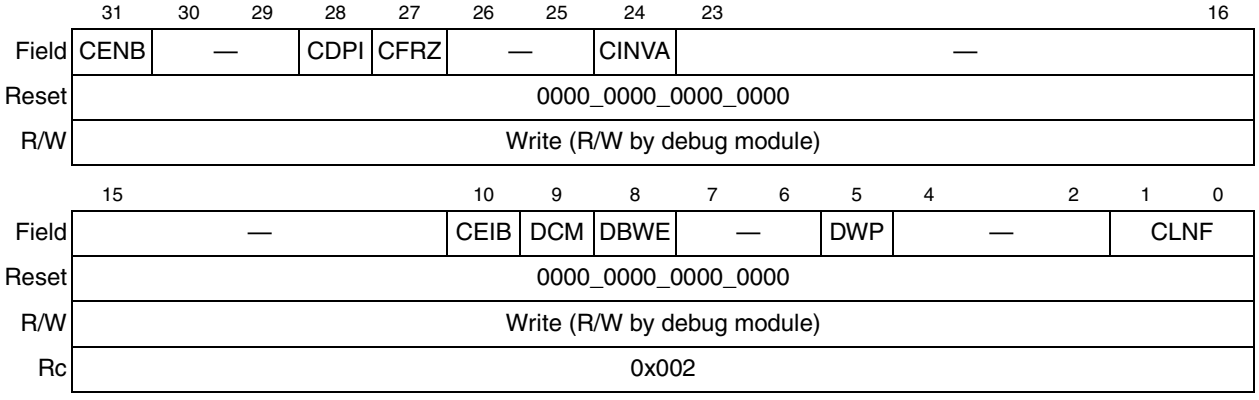

Figure 4-4. Cache Control Register (CACR)

Table 4-8 describes CACR fields.

Table 4-8. CACR Field Descriptions

Bits	Name	Description
31	CENB	Enable cache. 0 Cache disabled. The cache is not operational, but data and tags are preserved. 1 Cache enabled.
30–29	—	Reserved, should be cleared.
28	CDPI	Disable CPUSHL invalidation. 0 Cache disabled 1 Cache enabled
27	CFRZ	Cache freeze. Allows the user to freeze the contents of the cache. When CFRZ is asserted line fetches can be initiated and loaded into the line-fill buffer, but a valid cache entry can not be overwritten. If a given cache location is invalid, the contents of the line-fill buffer can be written into the memory array while CFRZ is asserted. 0 Normal operation 1 Freeze valid cache lines
26–25	—	Reserved, should be cleared.
24	CINVA	Cache invalidate all. Writing a 1 to this bit initiates entire cache invalidation. Note the caches are not cleared on power-up or normal reset. 0 No invalidation is performed. 1 Initiate invalidation of the entire cache. The cache controller sequentially clears V in all sets. Subsequent accesses stall until invalidation finishes, at which point, CINVA is automatically cleared. This operation takes 64 clock cycles.
23–11	—	Reserved, should be cleared.
10	CEIB	Default noncacheable fill buffer. Determines if the fill buffer can store noncacheable accesses 0 Fill buffer not used to store noncacheable instruction accesses (16 or 32 bits). 1 Fill buffer used to store noncacheable accesses. The fill buffer is used only for normal (TT = 0) instruction reads of a noncacheable region. Instructions are loaded into the fill buffer by a burst access (same as a line fill). They stay in the buffer until they are displaced, so subsequent accesses may not appear on the external bus. Note that this feature can cause a coherency problem for self-modifying code. If CEIB = 1 and a cache-inhibited access uses the fill buffer, instructions remain valid in the fill buffer until a cache-invalidate-all instruction, another cache-inhibited burst, or a miss that initiates a fill.
9	DCM	Default cache mode. See Section 4.5.2.3, “Caching Modes.” 0 Default cacheable 1 Default noncacheable
8	DBWE	Default buffered write enable. Defines the default value for enabling buffered writes. Generally, enabled buffered writes provide higher system performance but recovery from access errors can be more difficult. For the ColdFire CPU, reporting access errors on operand writes is always imprecise and enabling buffered writes simply further decouples the write instruction from the signaling of the fault 0 Termination of an operand write cycle on the processor's local bus is delayed until the external bus cycle completes. 1 A local bus write cycle is terminated immediately and the operation buffered in the bus controller. Operand write cycles are effectively decoupled between the processor's local bus and the external bus.
7–6	—	Reserved, should be cleared.
5	DWP	Default write protect. 0 Read and write accesses permitted 1 Write accesses not permitted
4–2	—	Reserved, should be cleared.

Table 4-8. CACR Field Descriptions (continued)

Bits	Name	Description
1–0	CLNF	Control longword fetch. Controls the size of the memory request the cache issues to the bus controller for different initial line access offsets. **CLNF** / Longword Address Bits: 00 → Line; 01 → Line; 10 → Line; 11 → Longword 01 → Line; Line; Longword; Longword 1x → Line; Line; Line; Line

4.5.3.2 Access Control Registers (ACR0 and ACR1)

The ACRs define memory reference attributes for two memory regions (one per ACR). These attributes affect every memory reference using the ACRs or the set of default attributes contained in the CACR. ACRs are examined for each memory reference not mapped to the SRAM or ROM module. The supervisor-level ACRs are accessed in the CPU address space using the MOVEC instruction with an Rc encoding of 0x004 and 0x005. ACRs can be read and written in BDM mode.

	31–24	23–16	15	14–13	12–7	6	5	4	3	2	1–0
Field	BA	BAM	EN	SM	—	CM	BWE	—		WP	—
Reset	0000_0000_0000_0000										
R/W	Write (R/W by debug module)										
Rc	ACR0: 0x004; ACR1: 0x005										

Figure 4-5. Access Control Register Format (ACR*n*)

Table 4-9 describes ACR*n* fields.

Table 4-9. ACR*n* Field Descriptions

Bits	Name	Description
31–24	BA	Base address. Compared with A[31:24]. Eligible addresses that match are assigned the access control attributes of this register.
23–16	BAM	Base address mask. Setting a BAM bit masks the corresponding BA bit. Setting low-order BAM bits can define contiguous regions exceeding 16 Mbytes. BAM can define multiple noncontiguous regions.
15	EN	Enable. Enables or disables the other ACR*n* bits. 0 Access control attributes disabled 1 Access control attributes enabled
14–13	SM	Supervisor mode. Specifies whether only user or supervisor accesses are allowed in this address range or if the type of access is a don't care. 00 Match addresses only in user mode 01 Match addresses only in supervisor mode 1x Execute cache matching on all accesses
12–7	—	Reserved; should be cleared.

Table 4-9. ACR*n* Field Descriptions (continued)

Bits	Name	Description
6	CM	Cache mode. Defines whether the memory access is cacheable or noncacheable. 0 Caching enabled 1 Caching disabled
5	BWE	Buffered write enable. Generally, the enabling of buffered writes provides higher system performance but recovery from access errors may be more difficult. For the ColdFire CPU, reporting access errors on operand writes is always imprecise; enabling buffered writes further decouples the write instruction from the signaling of the fault. 0 Termination of an operand write cycle on the processor's local bus is delayed until the external bus cycle is completed. 1 A write cycle on the local bus is terminated immediately and the operation is then buffered in the bus controller. In this mode, operand write cycles are effectively decoupled between the processor's local bus and the external bus.
4–3	—	Reserved, should be cleared.
2	WP	Write protect. Selects the write privilege of the memory region. 0 Read and write accesses permitted 1 Write accesses not permitted
1–0	—	Reserved, should be cleared.

Chapter 5
Debug Support

This chapter describes the Revision A enhanced hardware debug support in the MCF5272.

5.1 Overview

The debug module is shown in Figure 5-1.

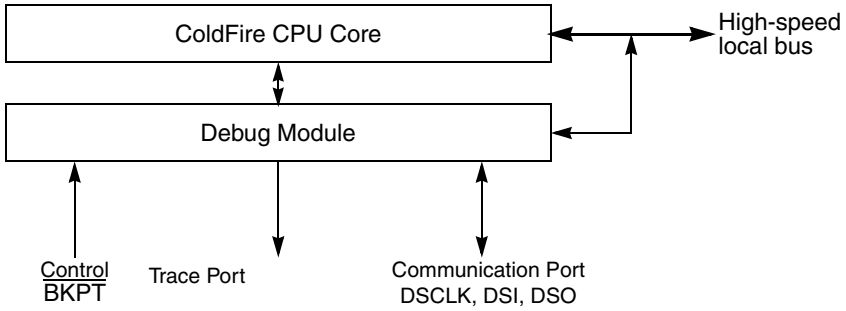

Figure 5-1. Processor/Debug Module Interface

Debug support is divided into three areas:

- Real-time trace support—The ability to determine the dynamic execution path through an application is fundamental for debugging. The ColdFire solution implements an 8-bit parallel output bus that reports processor execution status and data to an external emulator system. See Section 5.3, “Real-Time Trace Support.”
- Background debug mode (BDM)—Provides low-level debugging in the ColdFire processor complex. In BDM, the processor complex is halted and a variety of commands can be sent to the processor to access memory and registers. The external emulator uses a three-pin, serial, full-duplex channel. See Section 5.5, “Background Debug Mode (BDM),” and Section 5.4, “Programming Model.”
- Real-time debug support—BDM requires the processor to be halted, which many real-time embedded applications cannot do. Debug interrupts let real-time systems execute a unique service routine that can quickly save the contents of key registers and variables and return the system to normal operation. External development systems can access saved data because the hardware supports concurrent operation of the processor and BDM-initiated commands. See Section 5.6, “Real-Time Debug Support.”

5.2 Signal Description

Table 5-1 describes debug module signals. All ColdFire debug signals are unidirectional and related to a rising edge of the processor core's clock signal. The standard 26-pin debug connector is shown in Section 5.8, "Freescale-Recommended BDM Pinout."

Table 5-1. Debug Module Signals

Signal	Description
Development Serial Clock (DSCLK)	Internally synchronized input. (The logic level on DSCLK is validated if it has the same value on two consecutive rising CLKIN edges.) Clocks the serial communication port to the debug module during packet transfers. Maximum frequency is 1/5 the processor status clock (PSTCLK) speed. At the synchronized rising edge of DSCLK, the data input on DSI is sampled and DSO changes state.
Development Serial Input (DSI)	Internally synchronized input that provides data input for the serial communication port to the debug module.
Development Serial Output (DSO)	Provides serial output communication for debug module responses. DSO is registered internally.
Breakpoint ($\overline{\text{BKPT}}$)	Input used to request a manual breakpoint. Assertion of $\overline{\text{BKPT}}$ puts the processor into a halted state after the current instruction completes. Halt status is reflected on processor status signals (PST[3:0]) as the value 0xF.
Processor Status Clock (PSTCLK)	Delayed version of the processor clock. Its rising edge appears in the center of valid PST and DDATA output. See Figure 5-2. PSTCLK indicates when the development system should sample PST and DDATA values.
Debug Data (DDATA[3:0])	These output signals display the register breakpoint status as a default, or optionally, captured address and operand values. The capturing of data values is controlled by the setting of the CSR. Additionally, execution of the WDDATA instruction by the processor captures operands which are displayed on DDATA. These signals are updated each processor cycle.
Processor Status (PST[3:0])	These output signals report the processor status. Table 5-2 shows the encoding of these signals. These outputs indicate the current status of the processor pipeline and, as a result, are not related to the current bus transfer. The PST value is updated each processor cycle.

Figure 5-2 shows PSTCLK timing with respect to PST and DDATA.

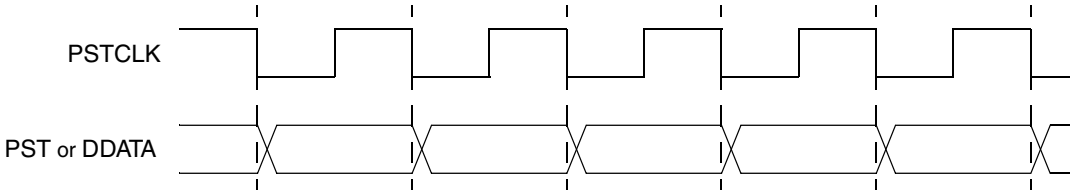

Figure 5-2. PSTCLK Timing

5.3 Real-Time Trace Support

Real-time trace, which defines the dynamic execution path, is a fundamental debug function. The ColdFire solution is to include a parallel output port providing encoded processor status and data to an external development system. This port is partitioned into two 4-bit nibbles: one nibble allows the processor to transmit processor status, (PST), and the other allows operand data to be displayed (debug data, DDATA). The processor status may not be related to the current bus transfer.

External development systems can use PST outputs with an external image of the program to completely track the dynamic execution path. This tracking is complicated by any change in flow, especially when branch target address calculation is based on the contents of a program-visible register (variant addressing). DDATA outputs can be configured to display the target address of such instructions in sequential nibble increments across multiple processor clock cycles, as described in Section 5.3.1, "Begin Execution of Taken Branch (PST = 0x5)." Two 32-bit storage elements form a FIFO buffer connecting the processor's high-speed local bus to the external development system through PST[3:0] and DDATA[3:0]. The buffer captures branch target addresses and certain data values for eventual display on the DDATA port, one nibble at a time starting with the least significant bit (lsb).

Execution speed is affected only when both storage elements contain valid data to be dumped to the DDATA port. The core stalls until one FIFO entry is available.

Table 5-2 shows the encoding of these signals.

Table 5-2. Processor Status Encoding

PST[3:0]		Definition
Hex	Binary	
0x0	0000	Continue execution. Many instructions execute in one processor cycle. If an instruction requires more clock cycles, subsequent clock cycles are indicated by driving PST outputs with this encoding.
0x1	0001	Begin execution of one instruction. For most instructions, this encoding signals the first clock cycle of an instruction's execution. Certain change-of-flow opcodes, plus the PULSE and WDDATA instructions, generate different encodings.
0x2	0010	Reserved
0x3	0011	Entry into user-mode. Signaled after execution of the instruction that caused the ColdFire processor to enter user mode.
0x4	0100	Begin execution of PULSE and WDDATA instructions. PULSE defines logic analyzer triggers for debug and/or performance analysis. WDDATA lets the core write any operand (byte, word, or longword) directly to the DDATA port, independent of debug module configuration. When WDDATA is executed, a value of 0x4 is signaled on the PST port, followed by the appropriate marker, and then the data transfer on the DDATA port. Transfer length depends on the WDDATA operand size.
0x5	0101	Begin execution of taken branch. For some opcodes, a branch target address may be displayed on DDATA depending on the CSR settings. CSR also controls the number of address bytes displayed, indicated by the PST marker value preceding the DDATA nibble that begins the data output. See Section 5.3.1, "Begin Execution of Taken Branch (PST = 0x5)."
0x6	0110	Reserved
0x7	0111	Begin execution of return from exception (RTE) instruction.

Table 5-2. Processor Status Encoding (continued)

PST[3:0]		Definition
Hex	Binary	
0x8–0xB	1000–1011	Indicates the number of bytes to be displayed on the DDATA port on subsequent clock cycles. The value is driven onto the PST port one PSTCLK cycle before the data is displayed on DDATA. 0x8 Begin 1-byte transfer on DDATA. 0x9 Begin 2-byte transfer on DDATA. 0xA Begin 3-byte transfer on DDATA. 0xB Begin 4-byte transfer on DDATA.
0xC	1100	Exception processing. Exceptions that enter emulation mode (debug interrupt or optionally trace) generate a different encoding, as described below. Because the 0xC encoding defines a multiple-cycle mode, PST outputs are driven with 0xC until exception processing completes.
0xD	1101	Entry into emulator mode. Displayed during emulation mode (debug interrupt or optionally trace). Because this encoding defines a multiple-cycle mode, PST outputs are driven with 0xD until exception processing completes.
0xE	1110	Processor is stopped. Appears in multiple-cycle format when the MCF5272 executes a STOP instruction. The ColdFire processor remains stopped until an interrupt occurs, thus PST outputs display 0xE until the stopped mode is exited.
0xF	1111	Processor is halted. Because this encoding defines a multiple-cycle mode, the PST outputs display 0xF until the processor is restarted or reset. (see Section 5.5.1, “CPU Halt”)

5.3.1 Begin Execution of Taken Branch (PST = 0x5)

PST is 0x5 when a taken branch is executed. For some opcodes, a branch target address may be displayed on DDATA depending on the CSR settings. CSR also controls the number of address bytes displayed, which is indicated by the PST marker value immediately preceding the DDATA nibble that begins the data output.

Bytes are displayed in least-to-most-significant order. The processor captures only those target addresses associated with taken branches which use a variant addressing mode, that is, RTE and RTS instructions, JMP and JSR instructions using address register indirect or indexed addressing modes, and all exception vectors.

The simplest example of a branch instruction using a variant address is the compiled code for a C language case statement. Typically, the evaluation of this statement uses the variable of an expression as an index into a table of offsets, where each offset points to a unique case within the structure. For such change-of-flow operations, the MCF5272 uses the debug pins to output the following sequence of information on successive processor clock cycles:

1. Use PST (0x5) to identify that a taken branch was executed.
2. Using the PST pins, optionally signal the target address to be displayed sequentially on the DDATA pins. Encodings 0x9–0xB identify the number of bytes displayed.
3. The new target address is optionally available on subsequent cycles using the DDATA port. The number of bytes of the target address displayed on this port is configurable (2, 3, or 4 bytes).

Another example of a variant branch instruction would be a JMP (A0) instruction. Figure 5-3 shows when the PST and DDATA outputs that indicate when a JMP (A0) executed, assuming the CSR was programmed to display the lower 2 bytes of an address.

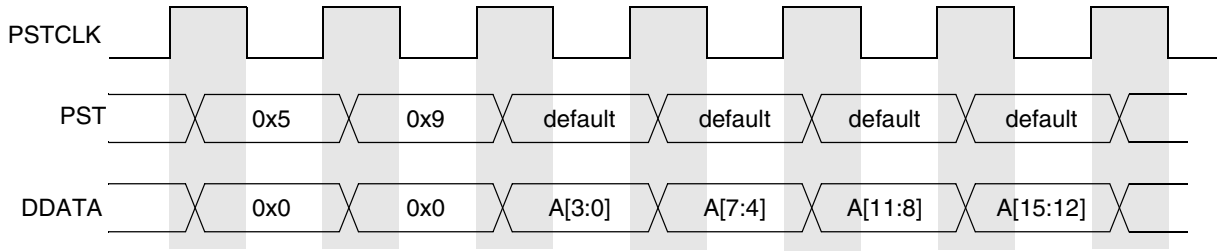

Figure 5-3. Example JMP Instruction Output on PST/DDATA

PST of 0x5 indicates a taken branch and the marker value 0x9 indicates a 2-byte address. Thus, the subsequent 4 nibbles of DDATA display the lower 2 bytes of address register A0 in least-to-most-significant nibble order. The PST output after the JMP instruction completes depends on the target instruction. The PST can continue with the next instruction before the address has completely displayed on DDATA because of the DDATA FIFO. If the FIFO is full and the next instruction has captured values to display on DDATA, the pipeline stalls (PST = 0x0) until space is available in the FIFO.

5.4 Programming Model

In addition to the existing BDM commands that provide access to the processor's registers and the memory subsystem, the debug module contains nine registers to support the required functionality. These registers are also accessible from the processor's supervisor programming model by executing the WDEBUG instruction (write only). Thus, the breakpoint hardware in the debug module can be read or written by the external development system using the debug serial interface or by the operating system running on the processor core. Software is responsible for guaranteeing that accesses to these resources are serialized and logically consistent. Hardware provides a locking mechanism in the CSR to allow the external development system to disable any attempted writes by the processor to the breakpoint registers (setting CSR[IPW]). BDM commands must not be issued if the MCF5272 is using the WDEBUG instruction to access debug module registers or the resulting behavior is undefined.

These registers, shown in Figure 5-4, are treated as 32-bit quantities, regardless of the number of implemented bits.

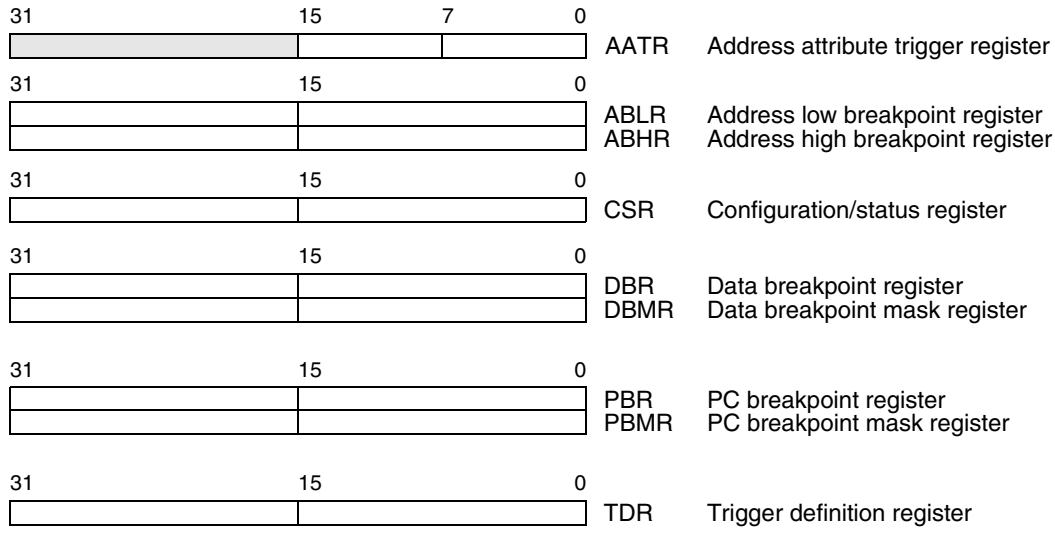

Note: Each debug register is accessed as a 32-bit register; shaded fields above are not used (don't care).
All debug control registers are writable from the external development system or the CPU via the WDEBUG instruction.
CSR is write-only from the programming model. It can be read or written through the BDM port using the RDMREG and WDMREG commands.

Figure 5-4. Debug Programming Model

These registers are accessed through the BDM port by new BDM commands, WDMREG and RDMREG, described in Section 5.5.3.3, "Command Set Descriptions." These commands contain a 5-bit field, DRc, that specifies the register, as shown in Table 5-3.

Table 5-3. BDM/Breakpoint Registers

DRc[4–0]	Register Name	Abbreviation	Initial State	Page
0x00	Configuration/status register	CSR	0x0000_0000	p. 5-10
0x01–0x05	Reserved	—	—	—
0x06	Address attribute trigger register	AATR	0x0000_0005	p. 5-7
0x07	Trigger definition register	TDR	0x0000_0000	p. 5-14
0x08	Program counter breakpoint register	PBR	—	p. 5-13
0x09	Program counter breakpoint mask register	PBMR	—	p. 5-13
0x0A–0x0B	Reserved	—	—	—
0x0C	Address breakpoint high register	ABHR	—	p. 5-9
0x0D	Address breakpoint low register	ABLR	—	p. 5-9
0x0E	Data breakpoint register	DBR	—	p. 5-12
0x0F	Data breakpoint mask register	DBMR	—	p. 5-12

NOTE

Debug control registers can be written by the external development system or the CPU through the WDEBUG instruction.

CSR is write-only from the programming model. It can be read or written through the BDM port using the RDMREG and WDMREG commands.

5.4.1 Revision A Shared Debug Resources

In the Revision A implementation of the debug module, certain hardware structures are shared between BDM and breakpoint functionality as shown in Table 5-4.

Table 5-4. Rev. A Shared BDM/Breakpoint Hardware

Register	BDM Function	Breakpoint Function
AATR	Bus attributes for all memory commands	Attributes for address breakpoint
ABHR	Address for all memory commands	Address for address breakpoint
DBR	Data for all BDM write commands	Data for data breakpoint

Thus, loading a register to perform a specific function that shares hardware resources is destructive to the shared function. For example, a BDM command to access memory overwrites an address breakpoint in ABHR. A BDM write command overwrites the data breakpoint in DBR.

5.4.2 Address Attribute Trigger Register (AATR)

The address attribute trigger register (AATR), Figure 5-5, defines address attributes and a mask to be matched in the trigger. The register value is compared with address attribute signals from the processor's local high-speed bus, as defined by the setting of the trigger definition register (TDR).

	15	14	13	12	11	10	8	7	6	5	4	3	2	0
Field	RM	SZM		TTM		TMM		R	SZ		TT		TM	
Reset	0000_0000_0000_0101													
R/W	Write only. AATR is accessible in supervisor mode as debug control register 0x06 using the WDEBUG instruction and through the BDM port using the WDMREG command.													
DRc[4–0]	0x06													

Figure 5-5. Address Attribute Trigger Register (AATR)

Table 5-5 describes AATR fields.

Table 5-5. AATR Field Descriptions

Bits	Name	Description
15	RM	Read/write mask. Setting RM masks R in address comparisons.
14–13	SZM	Size mask. Setting an SZM bit masks the corresponding SZ bit in address comparisons.
12–11	TTM	Transfer type mask. Setting a TTM bit masks the corresponding TT bit in address comparisons.
10–8	TMM	Transfer modifier mask. Setting a TMM bit masks the corresponding TM bit in address comparisons.
7	R	Read/write. R is compared with the R/$\overline{W}$ signal of the processor's local bus.
6–5	SZ	Size. Compared to the processor's local bus size signals. 00 Longword 01 Byte 10 Word 11 Reserved

Table 5-5. AATR Field Descriptions (continued)

Bits	Name	Description
4–3	TT	Transfer type. Compared with the local bus transfer type signals. 00 Normal processor access 01 Reserved 10 Emulator mode access 11 Acknowledge/CPU space access These bits also define the TT encoding for BDM memory commands. In this case, the 01 encoding indicates an external or DMA access (for backward compatibility). These bits affect the TM bits.
2–0	TM	Transfer modifier. Compared with the local bus transfer modifier signals, which give supplemental information for each transfer type. TT = 00 (normal mode): 000 Explicit cache line push 001 User data access 010 User code access 011 Reserved 100 Reserved 101 Supervisor data access 110 Supervisor code access 111 Reserved TT = 10 (emulator mode): 0xx–100 Reserved 101 Emulator mode data access 110 Emulator mode code access 111 Reserved TT = 11 (acknowledge/CPU space transfers): 000 CPU space access 001–111 Interrupt acknowledge levels 1–7 These bits also define the TM encoding for BDM memory commands (for backward compatibility).

5.4.3 Address Breakpoint Registers (ABLR, ABHR)

The address breakpoint low and high registers (ABLR, ABHR), Figure 5-6, define regions in the processor's data address space that can be used as part of the trigger. These register values are compared with the address for each transfer on the processor's high-speed local bus. The trigger definition register (TDR) identifies the trigger as one of three cases:

1. identically the value in ABLR
2. inside the range bound by ABLR and ABHR inclusive
3. outside that same range

	31	0
Field	Address	
Reset	—	
R/W	Write only. ABHR is accessible in supervisor mode as debug control register 0x0C using the WDEBUG instruction and via the BDM port using the RDMREG and WDMREG commands. ABLR is accessible in supervisor mode as debug control register 0x0D using the WDEBUG instruction and via the BDM port using the WDMREG command.	
DRc[4–0]	0x0D (ABLR); 0x0C (ABHR)	

Figure 5-6. Address Breakpoint Registers (ABLR, ABHR)

Table 5-6 describes ABLR fields.

Table 5-6. ABLR Field Description

Bits	Name	Description
31–0	Address	Low address. Holds the 32-bit address marking the lower bound of the address breakpoint range. Breakpoints for specific addresses are programmed into ABLR.

Table 5-7 describes ABHR fields.

Table 5-7. ABHR Field Description

Bits	Name	Description
31–0	Address	High address. Holds the 32-bit address marking the upper bound of the address breakpoint range.

5.4.4 Configuration/Status Register (CSR)

The configuration/status register (CSR) defines the debug configuration for the processor and memory subsystem and contains status information from the breakpoint logic. CSR is write-only from the programming model. It can be read from and written to through the BDM port. CSR is accessible in supervisor mode as debug control register 0x00 using the WDEBUG instruction and through the BDM port using the RDMREG and WDMREG commands.

	31–28	27	26	25	24	23–20	19–17	16
Field	BSTAT	FOF	TRG	HALT	BKPT	HRL	—	IPW
Reset	0000	0	0	0	0	0000	0 0 0	0
R/W[1]	R	R	R	R	R	R	—	R/W

	15	14	13	12–11	10	9–8	7	6	5	4	3–0
Field	MAP	TRC	EMU	DDC	UHE	BTB	—[1]	NPL	IPI	SSM	—
Reset	0	0	0	00	0	00	0	0	0	0	0000
R/W	R/W	R/W	R/W	R/W	R/W	R/W	R	R/W	R/W	R/W	—
DRc[4–0]	0x00										

[1] Bit 7 is reserved for Freescale use and must be written as a zero.

Figure 5-7. Configuration/Status Register (CSR)

Table 5-8 describes CSR fields.

Table 5-8. CSR Field Descriptions

Bit	Name	Description
31–28	BSTAT	Breakpoint status. Provides read-only status information concerning hardware breakpoints. BSTAT is cleared by a TDR write or by a CSR read when either a level-2 breakpoint is triggered or a level-1 breakpoint is triggered and the level-2 breakpoint is disabled. 0000 No breakpoints enabled 0001 Waiting for level-1 breakpoint 0010 Level-1 breakpoint triggered 0101 Waiting for level-2 breakpoint 0110 Level-2 breakpoint triggered
27	FOF	Fault-on-fault. If FOF is set, a catastrophic halt occurred and forced entry into BDM. FOF is cleared whenever CSR is read.
26	TRG	Hardware breakpoint trigger. If TRG is set, a hardware breakpoint halted the processor core and forced entry into BDM. Reset, the debug GO command, or reading CSR clear TRG.
25	HALT	Processor halt. If HALT is set, the processor executed a HALT and forced entry into BDM. Reset, the debug GO command, or reading CSR clear HALT.
24	BKPT	Breakpoint assert. If BKPT is set, $\overline{\text{BKPT}}$ was asserted, forcing the processor into BDM. Reset, the debug GO command, or reading CSR clear BKPT.
23–20	HRL	Hardware revision level. Indicates the level of debug module functionality. An emulator could use this information to identify the level of functionality supported. 0000 Initial debug functionality (Revision A) (this is the only valid value for the MCF5272)
19–17	—	Reserved, should be cleared.
16	IPW	Inhibit processor writes. Setting IPW inhibits processor-initiated writes to the debug module's programming model registers. IPW can be modified only by commands from the external development system.

Table 5-8. CSR Field Descriptions (continued)

Bit	Name	Description
15	MAP	Force processor references in emulator mode. 0 All emulator-mode references are mapped into supervisor code and data spaces. 1 The processor maps all references while in emulator mode to a special address space, TT = 10, TM = 101 or 110.
14	TRC	Force emulation mode on trace exception. If TRC = 1, the processor enters emulator mode when a trace exception occurs. If TRC=0, the processor enters supervisor mode.
13	EMU	Force emulation mode. If EMU = 1, the processor begins executing in emulator mode. See Section 5.6.1.1, "Emulator Mode."
12–11	DDC	Debug data control. Controls operand data capture for DDATA, which displays the number of bytes defined by the operand reference size before the actual data; byte displays 8 bits, word displays 16 bits, and long displays 32 bits (one nibble at a time across multiple clock cycles). See Table 5-2. 00 No operand data is displayed. 01 Capture all write data. 10 Capture all read data. 11 Capture all read and write data.
10	UHE	User halt enable. Selects the CPU privilege level required to execute the HALT instruction. 0 HALT is a supervisor-only instruction. 1 HALT is a supervisor/user instruction.
9–8	BTB	Branch target bytes. Defines the number of bytes of branch target address DDATA displays. 00 0 bytes 01 Lower 2 bytes of the target address 10 Lower 3 bytes of the target address 11 Entire 4-byte target address See Section 5.3.1, "Begin Execution of Taken Branch (PST = 0x5)."
7	—	Reserved, should be cleared.
6	NPL	Non- mode. Determines whether the core operates in pipelined or mode or not. 0 Pipelined mode 1 Nonpipelined mode. The processor effectively executes one instruction at a time with no overlap. This adds at least 5 cycles to the execution time of each instruction. Given an average execution latency of 1.6, throughput in non-pipeline mode would be 6.6, approximately 25% or less of pipelined performance. Regardless of the NPL state, a triggered PC breakpoint is always reported before the triggering instruction executes. In normal pipeline operation, the occurrence of an address and/or data breakpoint trigger is imprecise. In non-pipeline mode, triggers are always reported before the next instruction begins execution and trigger reporting can be considered precise. An address or data breakpoint should always occur before the next instruction begins execution. Therefore the occurrence of the address/data breakpoints should be guaranteed.
5	IPI	Ignore pending interrupts. 1 Core ignores any pending interrupt requests signalled while in single-instruction-step mode. 0 Core services any pending interrupt requests that were signalled while in single-step mode.
4	SSM	Single-step mode. Setting SSM puts the processor in single-step mode. 0 Normal mode. 1 Single-step mode. The processor halts after execution of each instruction. While halted, any BDM command can be executed. On receipt of the GO command, the processor executes the next instruction and halts again. This process continues until SSM is cleared.
3–0	—	Reserved, should be cleared.

5.4.5 Data Breakpoint/Mask Registers (DBR, DBMR)

The data breakpoint register (DBR), Figure 5-8, specify data patterns used as part of the trigger into debug mode. DBR bits are masked by setting corresponding DBMR bits, as defined in TDR.

	31 … 0
Field	Data (DBR); Mask (DBMR)
Reset	Uninitialized
R/W	DBR is accessible in supervisor mode as debug control register 0x0E, using the WDEBUG instruction and through the BDM port using the RDMREG and WDMREG commands. DBMR is accessible in supervisor mode as debug control register 0x0F,using the WDEBUG instruction and via the BDM port using the WDMREG command.
DRc[4–0]	0x0E (DBR), 0x0F (DBMR)

Figure 5-8. Data Breakpoint/Mask Registers (DBR and DBMR)

Table 5-9 describes DBR fields.

Table 5-9. DBR Field Descriptions

Bits	Name	Description
31–0	Data	Data breakpoint value. Contains the value to be compared with the data value from the processor's local bus as a breakpoint trigger.

Table 5-10 describes DBMR fields.

Table 5-10. DBMR Field Descriptions

Bits	Name	Description
31–0	Mask	Data breakpoint mask. The 32-bit mask for the data breakpoint trigger. Clearing a DBR bit allows the corresponding DBR bit to be compared to the appropriate bit of the processor's local data bus. Setting a DBMR bit causes that bit to be ignored.

The DBR supports both aligned and misaligned references. Table 5-11 shows relationships between processor address, access size, and location within the 32-bit data bus.

Table 5-11. Access Size and Operand Data Location

A[1:0]	Access Size	Operand Location
00	Byte	D[31:24]
01	Byte	D[23:16]
10	Byte	D[15:8]
11	Byte	D[7:0]
0x	Word	D[31:16]
1x	Word	D[15:0]
xx	Longword	D[31:0]

5.4.6 Program Counter Breakpoint/Mask Registers (PBR, PBMR)

The PC breakpoint register (PBR) defines an instruction address for use as part of the trigger. This register's contents are compared with the processor's program counter register when TDR is configured appropriately. PBR bits are masked by setting corresponding PBMR bits. Results are compared with the processor's program counter register, as defined in TDR. Figure 5-9 shows the PC breakpoint register.

	31 … 0
Field	Program Counter
Reset	—
R/W	Write. PC breakpoint register is accessible in supervisor mode using the WDEBUG instruction and through the BDM port using the RDMREG and WDMREG commands using values shown in Section 5.5.3.3, "Command Set Descriptions."
DRc[4–0]	0x08

Figure 5-9. Program Counter Breakpoint Register (PBR)

Table 5-12 describes PBR fields.

Table 5-12. PBR Field Descriptions

Bits	Name	Description
31–0	Address	PC breakpoint address. The 32-bit address to be compared with the PC as a breakpoint trigger.

Figure 5-9 shows PBMR.

	31 … 0
Field	Mask
Reset	—
R/W	Write. PBMR is accessible in supervisor mode as debug control register 0x09 using the WDEBUG instruction and via the BDM port using the wdmreg command.
DRc[4–0]	0x09

Figure 5-10. Program Counter Breakpoint Mask Register (PBMR)

Table 5-13 describes PBMR fields.

Table 5-13. PBMR Field Descriptions

Bits	Name	Description
31–0	Mask	PC breakpoint mask. A zero in a bit position causes the corresponding PBR bit to be compared to the appropriate PC bit. Set PBMR bits cause PBR bits to be ignored.

5.4.7 Trigger Definition Register (TDR)

The TDR, shown in Table 5-11, configures the operation of the hardware breakpoint logic that corresponds with the ABHR/ABLR/AATR, PBR/PBMR, and DBR/DBMR registers within the debug module. The TDR controls the actions taken under the defined conditions. Breakpoint logic may be configured as a one- or two-level trigger. TDR[31–16] define the second-level trigger and bits 15–0 define the first-level trigger.

NOTE

The debug module has no hardware interlocks, so to prevent spurious breakpoint triggers while the breakpoint registers are being loaded, disable TDR (by clearing TDR[29,13])before defining triggers.

A write to TDR clears the CSR trigger status bits, CSR[BSTAT].

Second-Level Trigger

	31	30	29	28	27	26	25	24	23	22	21	20	19	18	17	16
Field	TRC		EBL	EDLW	EDWL	EDWU	EDLL	EDLM	EDUM	EDUU	DI	EAI	EAR	EAL	EPC	PCI
Reset	0000_0000_0000_0000															

First-Level Trigger

	15	14	13	12	11	10	9	8	7	6	5	4	3	2	1	0
Field	—		EBL	EDLW	EDWL	EDWU	EDLL	EDLM	EDUM	EDUU	DI	EAI	EAR	EAL	EPC	PCI
Reset	0000_0000_0000_0000															
R/W	Write only. Accessible in supervisor mode as debug control register 0x07 using the WDEBUG instruction and through the BDM port using the WDMREG command.															
DRc[4–0]	0x07															

Figure 5-11. Trigger Definition Register (TDR)

Table 5-14 describes TDR fields.

Table 5-14. TDR Field Descriptions

Bits	Name	Description
31–30	TRC	Trigger response control. Determines how the processor responds to a completed trigger condition. The trigger response is always displayed on DDATA. 00 Display on DDATA only 01 Processor halt 10 Debug interrupt 11 Reserved
15–14	—	Reserved, should be cleared.
29/13	EBL	Enable breakpoint. Global enable for the breakpoint trigger. Setting TDR[EBL] enables a breakpoint trigger. Clearing it disables all breakpoints at that level.

Table 5-14. TDR Field Descriptions (continued)

Bits	Name	Description	
28–22 12–6	ED*x*	Setting an ED*x* bit enables the corresponding data breakpoint condition based on the size and placement on the processor's local data bus. Clearing all ED*x* bits disables data breakpoints.	
28/12		EDLW	Data longword. Entire processor's local data bus.
27/11		EDWL	Lower data word.
26/10		EDWU	Upper data word.
25/9		EDLL	Lower lower data byte. Low-order byte of the low-order word.
24/8		EDLM	Lower middle data byte. High-order byte of the low-order word.
23/7		EDUM	Upper middle data byte. Low-order byte of the high-order word.
22/6		EDUU	Upper upper data byte. High-order byte of the high-order word.
21/5	DI	Data breakpoint invert. Provides a way to invert the logical sense of all the data breakpoint comparators. This can develop a trigger based on the occurrence of a data value other than the DBR contents.	
20–18/4 –2	EA*x*	Enable address bits. Setting an EA bit enables the corresponding address breakpoint. Clearing all three bits disables the breakpoint.	
20/4		EAI	Enable address breakpoint inverted. Breakpoint is based outside the range between ABLR and ABHR.
19/3		EAR	Enable address breakpoint range. The breakpoint is based on the inclusive range defined by ABLR and ABHR.
18/2		EAL	Enable address breakpoint low. The breakpoint is based on the address in the ABLR.
17/1	EPC	Enable PC breakpoint. If set, this bit enables the PC breakpoint.	
16/0	PCI	Breakpoint invert. If set, this bit allows execution outside a given region as defined by PBR and PBMR to enable a trigger. If cleared, the PC breakpoint is defined within the region defined by PBR and PBMR.	

5.5 Background Debug Mode (BDM)

The ColdFire Family implements a low-level system debugger in the microprocessor hardware. Communication with the development system is handled through a dedicated, high-speed serial command interface. The ColdFire architecture implements the BDM controller in a dedicated hardware module. Although some BDM operations, such as CPU register accesses, require the CPU to be halted, other BDM commands, such as memory accesses, can be executed while the processor is running.

5.5.1 CPU Halt

Although most BDM operations can occur in parallel with CPU operations, unrestricted BDM operation requires the CPU to be halted. The sources that can cause the CPU to halt are listed below in order of priority:

1. A catastrophic fault-on-fault condition automatically halts the processor.
2. A hardware breakpoint can be configured to generate a pending halt condition similar to the assertion of $\overline{\text{BKPT}}$. This type of halt is always first made pending in the processor. Next, the processor samples for pending halt and interrupt conditions once per instruction. When a pending condition is asserted, the processor halts execution at the next sample point. See Section 5.6.1, “Theory of Operation.”
3. The execution of a HALT instruction immediately suspends execution. Attempting to execute HALT in user mode while CSR[UHE] = 0 generates a privilege violation exception. If CSR[UHE] = 1, HALT can be executed in user mode. After HALT executes, the processor can be restarted by serial shifting a GO command into the debug module. Execution continues at the instruction after HALT.
4. The assertion of the $\overline{\text{BKPT}}$ input is treated as a pseudo-interrupt; that is, the halt condition is postponed until the processor core samples for halts/interrupts. The processor samples for these conditions once during the execution of each instruction. If there is a pending halt condition at the sample time, the processor suspends execution and enters the halted state.

The assertion of $\overline{\text{BKPT}}$ should be considered in the following two special cases:

- After the system reset signal is negated, the processor waits for 16 processor clock cycles before beginning reset exception processing. If the $\overline{\text{BKPT}}$ input is asserted within eight cycles after $\overline{\text{RSTI}}$ is negated, the processor enters the halt state, signaling halt status (0xF) on the PST outputs. While the processor is in this state, all resources accessible through the debug module can be referenced. This is the only chance to force the processor into emulation mode through CSR[EMU].
  After system initialization, the processor’s response to the GO command depends on the set of BDM commands performed while it is halted for a breakpoint. Specifically, if the PC register was loaded, the GO command causes the processor to exit halted state and pass control to the instruction address in the PC, bypassing normal reset exception processing. If the PC was not loaded, the GO command causes the processor to exit halted state and continue reset exception processing.
- The ColdFire architecture also handles a special case of $\overline{\text{BKPT}}$ being asserted while the processor is stopped by execution of the STOP instruction. For this case, the processor exits the stopped mode and enters the halted state, at which point, all BDM commands may be exercised. When restarted, the processor continues by executing the next sequential instruction, that is, the instruction following the STOP opcode.

CSR[27–24] indicates the halt source, showing the highest priority source for multiple halt conditions.

5.5.2 BDM Serial Interface

When the CPU is halted and PST reflects the halt status, the development system can send unrestricted commands to the debug module. The debug module implements a synchronous protocol using two inputs (DSCLK and DSI) and one output (DSO), where DSO is specified as a delay relative to the rising edge of the processor clock. See Table 5-1. The development system serves as the serial communication channel master and must generate DSCLK.

The serial channel operates at a frequency from DC to 1/5 of the PSTCLK frequency. The channel uses full-duplex mode, where data is sent and received simultaneously by both master and slave devices. The transmission consists of 17-bit packets composed of a status/control bit and a 16-bit data word. As shown in Figure 5-12, all state transitions are enabled on a rising edge of the PSTCLK clock when DSCLK is high; that is, DSI is sampled and DSO is driven.

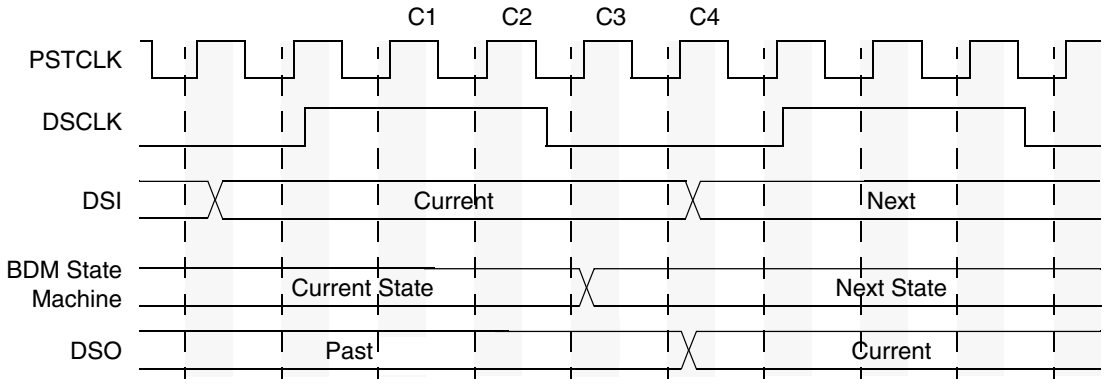

Figure 5-12. BDM Serial Interface Timing

DSCLK and DSI are synchronized inputs. DSCLK acts as a pseudo clock enable and is sampled on the rising edge of the processor CLK as well as the DSI. DSO is delayed from the DSCLK-enabled CLK rising edge (registered after a BDM state machine state change). All events in the debug module's serial state machine are based on the processor clock rising edge. DSCLK must also be sampled low (on a positive edge of CLK) between each bit exchange. The MSB is transferred first. Because DSO changes state based on an internally-recognized rising edge of DSCLK, DSDO cannot be used to indicate the start of a serial transfer. The development system must count clock cycles in a given transfer. C1–C4 are described as follows:

- C1—First synchronization cycle for DSI (DSCLK is high).
- C2—Second synchronization cycle for DSI (DSCLK is high).
- C3—BDM state machine changes state depending upon DSI and whether the entire input data transfer has been transmitted.
- C4—DSO changes to next value.

NOTE

A not-ready response can be ignored except during a memory-referencing cycle. Otherwise, the debug module can accept a new serial transfer after 32 processor clock periods.

5.5.2.1 Receive Packet Format

The basic receive packet, Figure 5-13, consists of 16 data bits and 1 status bit.

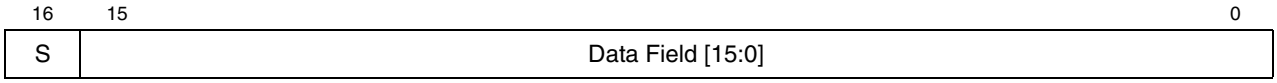

Figure 5-13. Receive BDM Packet

Table 5-15 describes receive BDM packet fields.

Table 5-15. Receive BDM Packet Field Description

Bits	Name	Description
16	S	Status. Indicates the status of CPU-generated messages listed below. The not-ready response can be ignored unless a memory-referencing cycle is in progress. Otherwise, the debug module can accept a new serial transfer after 32 processor clock periods. S DataMessage 0 xxxxValid data transfer 0 0xFFFFStatus OK 1 0x0000Not ready with response; come again 1 0x0001Error—Terminated bus cycle; data invalid 1 0xFFFFIllegal command
15–0	Data	Data. Contains the message to be sent from the debug module to the development system. The response message is always a single word, with the data field encoded as shown above.

5.5.2.2 Transmit Packet Format

The basic transmit packet, Figure 5-14, consists of 16 data bits and 1 control bit.

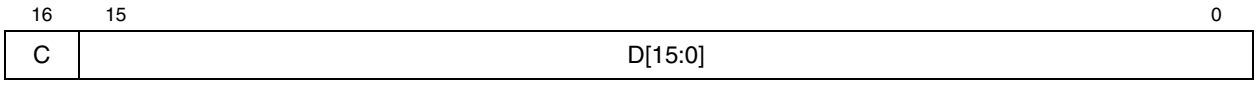

Figure 5-14. Transmit BDM Packet

Table 5-16 describes transmit BDM packet fields.

Table 5-16. Transmit BDM Packet Field Description

Bits	Name	Description
16	C	Control. This bit is reserved. Command and data transfers initiated by the development system should clear C.
15–0	Data	Contains the data to be sent from the development system to the debug module.

5.5.3 BDM Command Set

Table 5-17 summarizes the BDM command set. Subsequent paragraphs contain detailed descriptions of each command. Issuing a BDM command when the processor is accessing debug module registers using the WDEBUG instruction causes undefined behavior.

Table 5-17. BDM Command Summary

Command	Mnemonic	Description	CPU State[1]	Section	Command (Hex)
Read A/D register	rareg/ rdreg	Read the selected address or data register and return the results through the serial interface.	Halted	5.5.3.3.1	0x218 {A/D, Reg[2:0]}
Write A/D register	wareg/ wdreg	Write the data operand to the specified address or data register.	Halted	5.5.3.3.2	0x208 {A/D, Reg[2:0]}
Read memory location	read	Read the data at the memory location specified by the longword address.	Steal	5.5.3.3.3	0x1900—byte 0x1940—word 0x1980—lword
Write memory location	write	Write the operand data to the memory location specified by the longword address.	Steal	5.5.3.3.4	0x1800—byte 0x1840—word 0x1880—lword
Dump memory block	dump	Used with READ to dump large blocks of memory. An initial READ is executed to set up the starting address of the block and to retrieve the first result. A DUMP command retrieves subsequent operands.	Steal	5.5.3.3.5	0x1D00—byte 0x1D40—word 0x1D80—lword
Fill memory block	fill	Used with WRITE to fill large blocks of memory. An initial WRITE is executed to set up the starting address of the block and to supply the first operand. A FILL command writes subsequent operands.	Steal	5.5.3.3.6	0x1C00—byte 0x1C40—word 0x1C80—lword
Resume execution	go	The pipeline is flushed and refilled before resuming instruction execution at the current PC.	Halted	5.5.3.3.7	0x0C00
No operation	nop	Perform no operation; may be used as a null command.	Parallel	5.5.3.3.8	0x0000
Read control register	rcreg	Read the system control register.	Halted	5.5.3.3.9	0x2980
Write control register	wcreg	Write the operand data to the system control register.	Halted	5.5.3.3.10	0x2880
Read debug module register	rdmreg	Read the debug module register.	Parallel	5.5.3.3.11	0x2D {0x4[2] DRc[4:0]}
Write debug module register	wdmreg	Write the operand data to the debug module register.	Parallel	5.5.3.3.12	0x2C {0x4[2] DRc[4:0]}

1 General command effect and/or requirements on CPU operation:
- Halted. The CPU must be halted to perform this command.
- Steal. Command generates bus cycles that can be interleaved with bus accesses.
- Parallel. Command is executed in parallel with CPU activity.

2 0x4 is a three-bit field.

Unassigned command opcodes are reserved by Freescale. All unused command formats within any revision level perform a NOP and return the illegal command response.

5.5.3.1 ColdFire BDM Command Format

All ColdFire Family BDM commands include a 16-bit operation word followed by an optional set of one or more extension words, as shown in Figure 5-15.

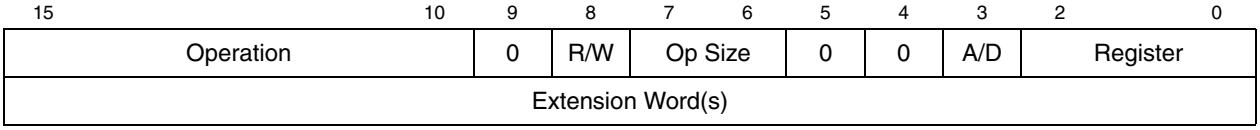

Figure 5-15. BDM Command Format

Table 5-18 describes BDM fields.

Table 5-18. BDM Field Descriptions

Bit	Name	Description
15–10	Operation	Specifies the command. These values are listed in Table 5-17.
9	0	Reserved
8	R/W	Direction of operand transfer. 0 Data is written to the CPU or to memory from the development system. 1 The transfer is from the CPU to the development system.
7–6	Operand Size	Operand data size for sized operations. Addresses are expressed as 32-bit absolute values. Note that a command performing a byte-sized memory read leaves the upper 8 bits of the response data undefined. Referenced data is returned in the lower 8 bits of the response. Operand SizeBit Values 00 Byte8 bits 01 Word16 bits 10 Longword32 bits 11 Reserved—
5–4	00	Reserved
3	A/D	Address/data. Determines whether the register field specifies a data or address register. 0 Indicates a data register. 1 Indicates an address register.
2–0	Register	Contains the register number in commands that operate on processor registers.

5.5.3.1.1 Extension Words as Required

Some commands require extension words for addresses and/or immediate data. Addresses require two extension words because only absolute long addressing is permitted. Longword accesses are forcibly longword-aligned and word accesses are forcibly word-aligned. Immediate data can be 1 or 2 words long. Byte and word data each requires a single extension word and longword data requires two extension words.

Operands and addresses are transferred most-significant word first. In the following descriptions of the BDM command set, the optional set of extension words is defined as address, data, or operand data.

5.5.3.2 Command Sequence Diagrams

The command sequence diagram in Figure 5-16 shows serial bus traffic for commands. Each bubble represents a 17-bit bus transfer. The top half of each bubble indicates the data the development system sends to the debug module; the bottom half indicates the debug module's response to the previous development system commands. Command and result transactions overlap to minimize latency.

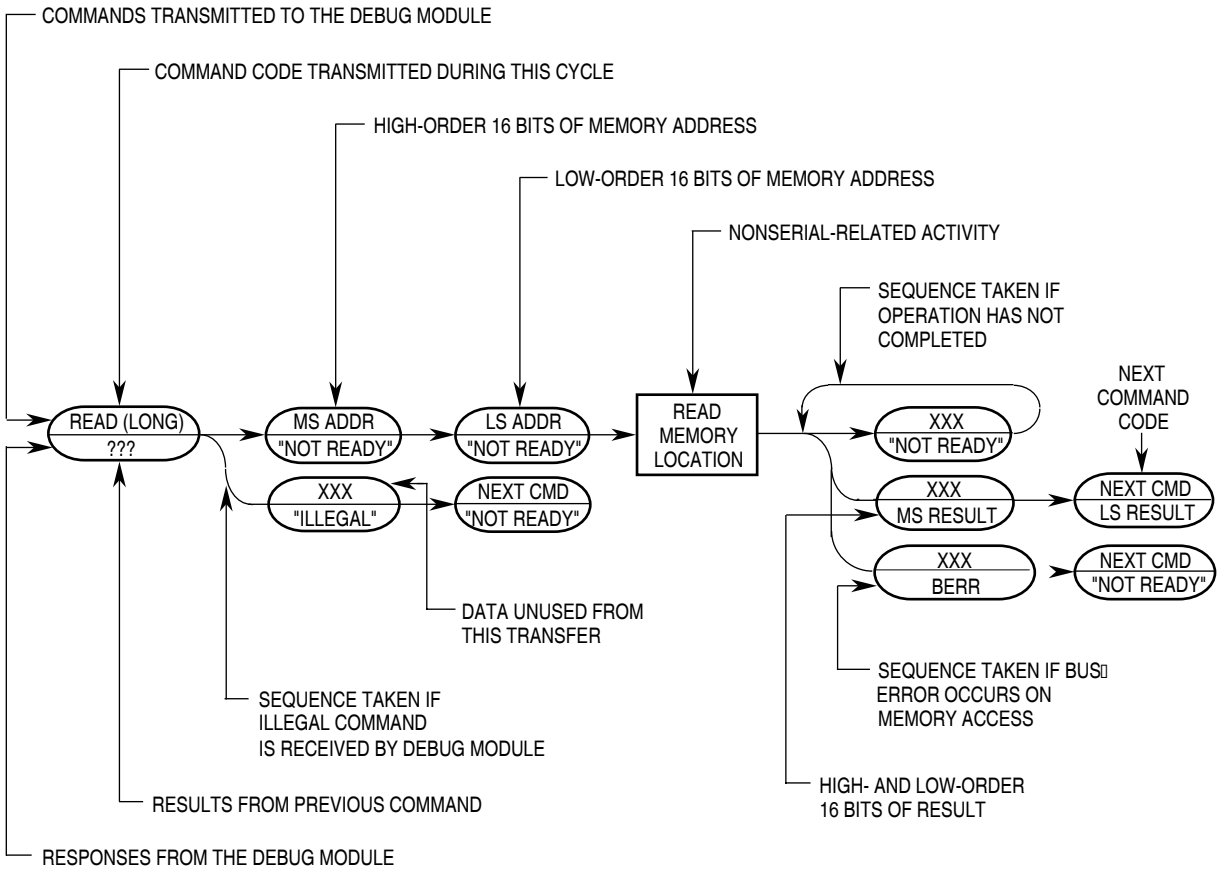

Figure 5-16. Command Sequence Diagram

The sequence is as follows:

- In cycle 1, the development system command is issued (READ in this example). The debug module responds with either the low-order results of the previous command or a command complete status of the previous command, if no results are required.
- In cycle 2, the development system supplies the high-order 16 address bits. The debug module returns a not-ready response unless the received command is decoded as unimplemented, which is indicated by the illegal command encoding. If this occurs, the development system should retransmit the command.

NOTE

A not-ready response can be ignored except during a memory-referencing cycle. Otherwise, the debug module can accept a new serial transfer after 32 processor clock periods.

- In cycle 3, the development system supplies the low-order 16 address bits. The debug module always returns a not-ready response.
- At the completion of cycle 3, the debug module initiates a memory read operation. Any serial transfers that begin during a memory access return a not-ready response.
- Results are returned in the two serial transfer cycles after the memory access completes. For any command performing a byte-sized memory read operation, the upper 8 bits of the response data are undefined and the referenced data is returned in the lower 8 bits. The next command's opcode is sent to the debug module during the final transfer. If a memory or register access is terminated with a bus error, the error status (S = 1, DATA = 0x0001) is returned instead of result data.

5.5.3.3 Command Set Descriptions

The following sections describe the commands summarized in Table 5-17.

NOTE

The BDM status bit (S) is 0 for normally completed commands; S = 1 for illegal commands, not-ready responses, and transfers with bus-errors. Section 5.5.2, "BDM Serial Interface," describes the receive packet format.

Freescale reserves unassigned command opcodes for future expansion. Unused command formats in any revision level perform a NOP and return an illegal command response.

5.5.3.3.1 Read A/D Register (RAREG/RDREG)

Read the selected address or data register and return the 32-bit result. A bus error response is returned if the CPU core is not halted.

Command/Result Formats:

	15–12	11–8	7–4	3	2–0
Command	0x2	0x1	0x8	A/D	Register
Result	D[31:16]				
	D[15:0]				

Figure 5-17. RAREG/RDREG Command Format

Command Sequence:

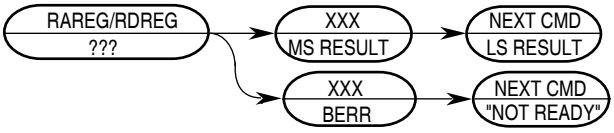

Figure 5-18. RAREG/RDREG Command Sequence

Operand Data: None

Result Data: The contents of the selected register are returned as a longword value, most-significant word first.

5.5.3.3.2 Write A/D Register (WAREG/WDREG)

The operand longword data is written to the specified address or data register. A write alters all 32 register bits. A bus error response is returned if the CPU core is not halted.

Command Format:

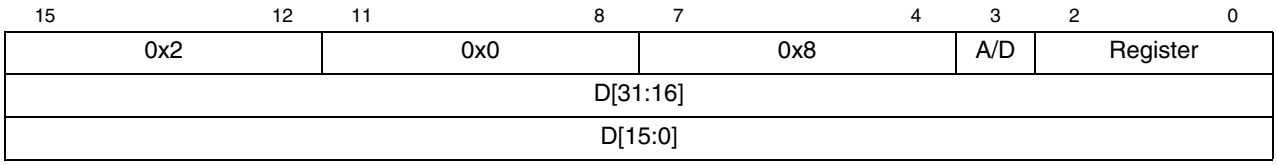

Figure 5-19. WAREG/WDREG Command Format

Command Sequence

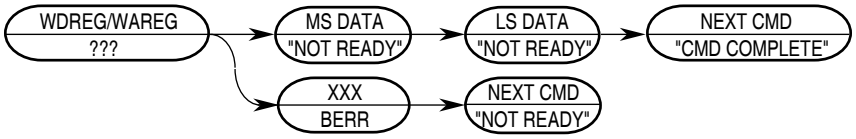

Figure 5-20. WAREG/WDREG Command Sequence

Operand Data	Longword data is written into the specified address or data register. The data is supplied most-significant word first.
Result Data	Command complete status is indicated by returning 0xFFFF (with S cleared) when the register write is complete.

5.5.3.3.3 Read Memory Location (READ)

Read data at the longword address. Address space is defined by BAAR[TT,TM]. Hardware forces low-order address bits to zeros for word and longword accesses to ensure that word addresses are word-aligned and longword addresses are longword-aligned.

Command/Result Formats:

		15 12	11 8	7 4	3 0
Byte	Command	0x1	0x9	0x0	0x0
		A[31:16]			
		A[15:0]			
	Result	X X X X X X X X		D[7:0]	
Word	Command	0x1	0x9	0x4	0x0
		A[31:16]			
		A[15:0]			
	Result	D[15:0]			
Longword	Command	0x1	0x9	0x8	0x0
		A[31:16]			
		A[15:0]			
	Result	D[31:16]			
		D[15:0]			

Figure 5-21. READ Command/Result Formats

Command Sequence:

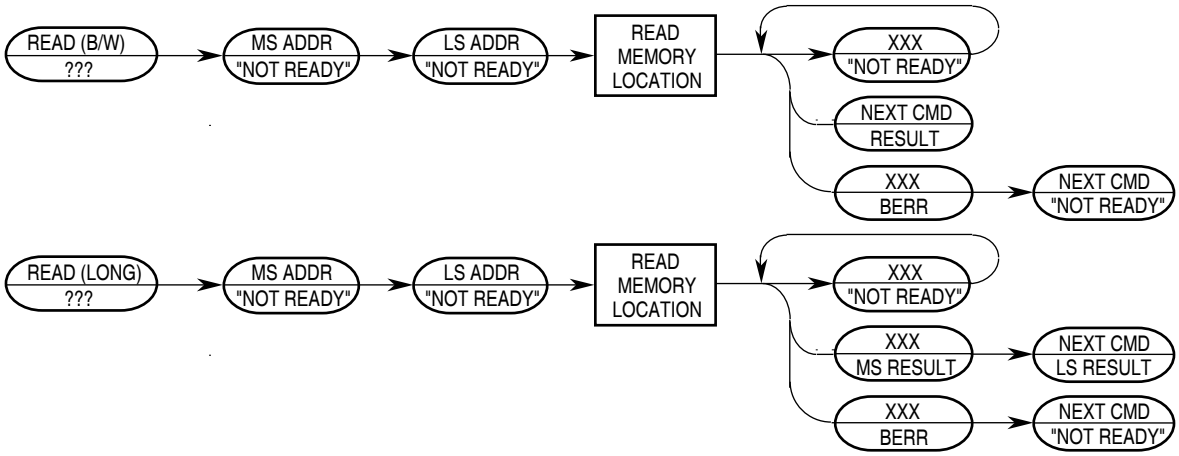

Figure 5-22. READ Command Sequence

Operand Data — The only operand is the longword address of the requested location.

Result Data — Word results return 16 bits of data; longword results return 32. Bytes are returned in the LSB of a word result, the upper byte is undefined. 0x0001 (S = 1) is returned if a bus error occurs.

5.5.3.3.4 Write Memory Location (WRITE)

Write data to the memory location specified by the longword address. The address space is defined by BAAR[TT,TM]. Hardware forces low-order address bits to zeros for word and longword accesses to ensure that word addresses are word-aligned and longword addresses are longword-aligned.

Command Formats:

	15 12	11 8	7 4	3 1
Byte	0x1	0x8	0x0	0x0
	A[31:16]			
	A[15:0]			
	X X X X X X X X		D[7:0]	
Word	0x1	0x8	0x4	0x0
	A[31:16]			
	A[15:0]			
	D[15:0]			
Longword	0x1	0x8	0x8	0x0
	A[31:16]			
	A[15:0]			
	D[31:16]			
	D[15:0]			

Figure 5-23. WRITE Command Format

Command Sequence:

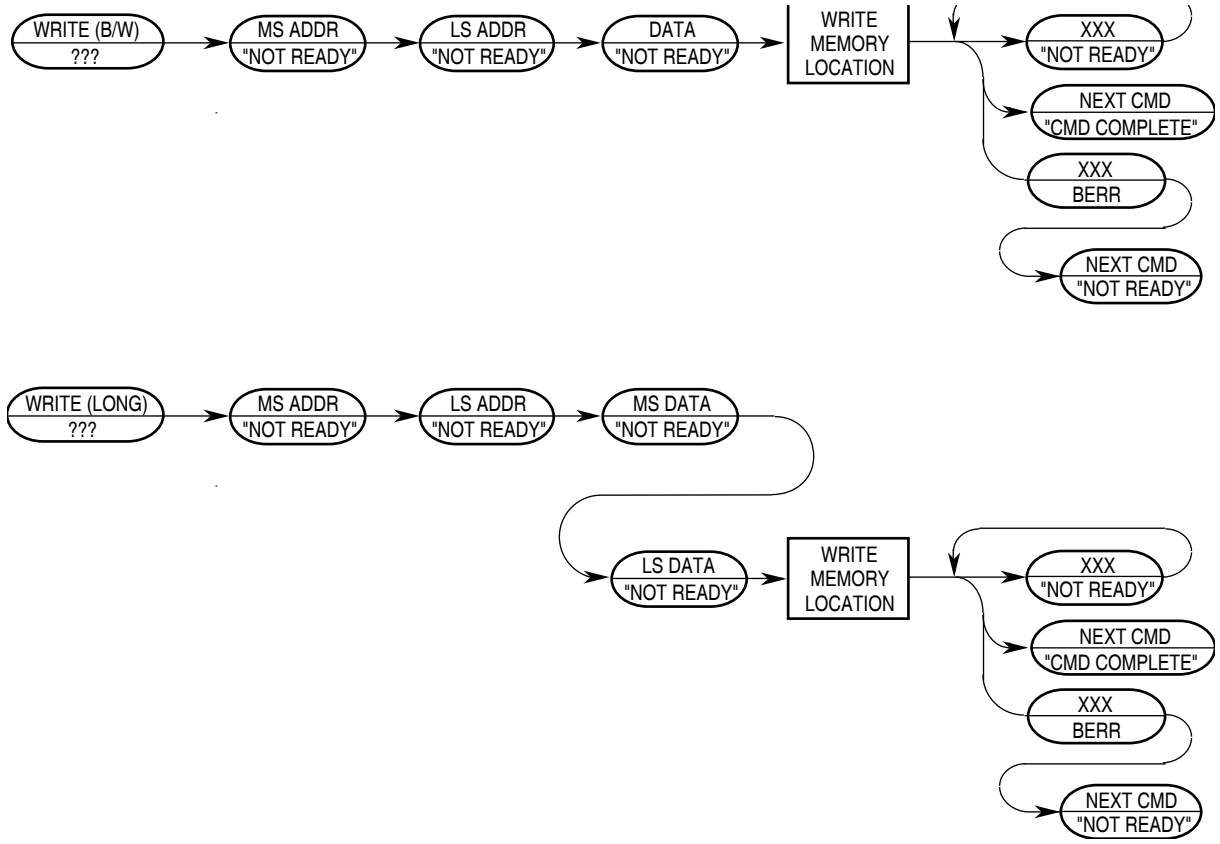

Figure 5-24. WRITE Command Sequence

Operand Data	This two-operand instruction requires a longword absolute address that specifies a location to which the data operand is to be written. Byte data is sent as a 16-bit word, justified in the LSB; 16- and 32-bit operands are sent as 16 and 32 bits, respectively
Result Data	Command complete status is indicated by returning 0xFFFF (with S cleared) when the register write is complete. A value of 0x0001 (with S set) is returned if a bus error occurs.

5.5.3.3.5 Dump Memory Block (DUMP)

DUMP is used with the READ command to access large blocks of memory. An initial READ is executed to set up the starting address of the block and to retrieve the first result. If an initial READ is not executed before the first DUMP, an illegal command response is returned. The DUMP command retrieves subsequent operands. The initial address is incremented by the operand size (1, 2, or 4) and saved in a temporary register. Subsequent DUMP commands use this address, perform the memory read, increment it by the current operand size, and store the updated address in the temporary register.

NOTE

DUMP does not check for a valid address; it is a valid command only when preceded by NOP, READ, or another DUMP command. Otherwise, an illegal command response is returned. NOP can be used for intercommand padding without corrupting the address pointer.

The size field is examined each time a DUMP command is processed, allowing the operand size to be dynamically altered.

Command/Result Formats:

		15 12	11 8	7 4	3 0
Byte	Command	0x1	0xD	0x0	0x0
	Result	X X X X	X X X X	D[7:0]	
Word	Command	0x1	0xD	0x4	0x0
	Result	D[15:0]			
Longword	Command	0x1	0xD	0x8	0x0
	Result	D[31:16]			
		D[15:0]			

Figure 5-25. DUMP Command/Result Formats

Command Sequence:

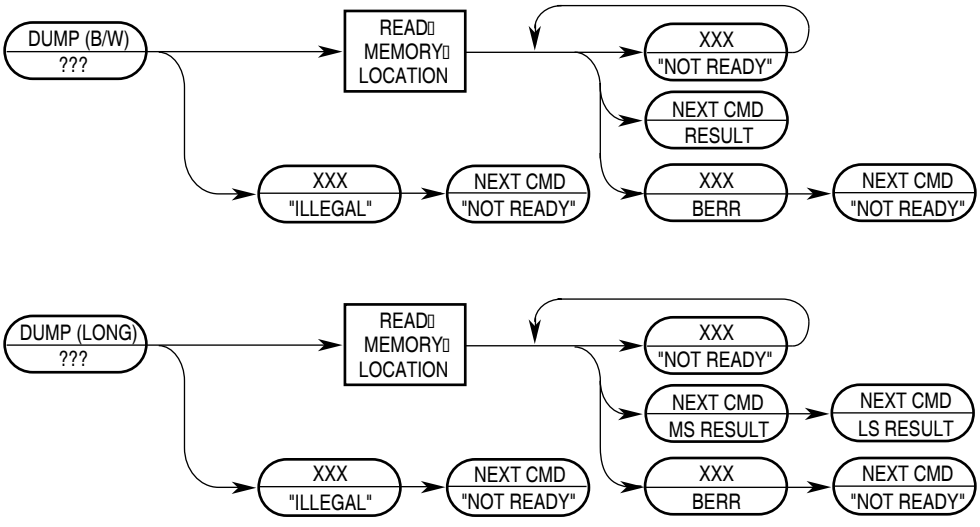

Figure 5-26. DUMP Command Sequence

Operand Data: None

Result Data: Requested data is returned as either a word or longword. Byte data is returned in the least-significant byte of a word result. Word results return 16 bits of significant data; longword results return 32 bits. A value of 0x0001 (with S set) is returned if a bus error occurs.

5.5.3.3.6 Fill Memory Block (FILL)

A FILL command is used with the WRITE command to access large blocks of memory. An initial WRITE is executed to set up the starting address of the block and to supply the first operand. The FILL command writes subsequent operands. The initial address is incremented by the operand size (1, 2, or 4) and saved in a temporary register after the memory write. Subsequent FILL commands use this address, perform the write, increment it by the current operand size, and store the updated address in the temporary register.

If an initial WRITE is not executed preceding the first FILL command, the illegal command response is returned.

NOTE

The FILL command does not check for a valid address—FILL is a valid command only when preceded by another FILL, a NOP, or a WRITE command. Otherwise, an illegal command response is returned. The NOP command can be used for intercommand padding without corrupting the address pointer.

The size field is examined each time a FILL command is processed, allowing the operand size to be altered dynamically.

Command Formats:

	15 12	11 8	7 4	3 0
Byte	0x1	0xC	0x0	0x0
	X X X X	X X X X	D[7:0]	
Word	0x1	0xC	0x4	0x0
	D[15:0]			
Longword	0x1	0xC	0x8	0x0
	D[31:16]			
	D[15:0]			

Figure 5-27. FILL Command Format

Command Sequence:

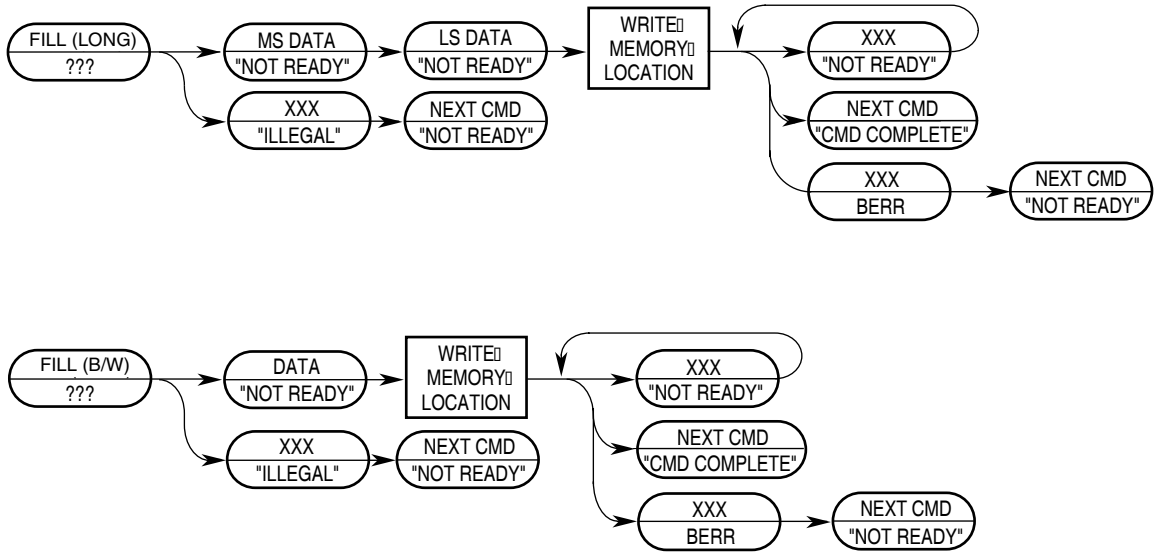

Figure 5-28. FILL Command Sequence

Operand Data: A single operand is data to be written to the memory location. Byte data is sent as a 16-bit word, justified in the least-significant byte; 16- and 32-bit operands are sent as 16 and 32 bits, respectively.

Result Data: Command complete status (0xFFFF) is returned when the register write is complete. A value of 0x0001 (with S set) is returned if a bus error occurs.

5.5.3.3.7 Resume Execution (GO)

The pipeline is flushed and refilled before normal instruction execution resumes. Prefetching begins at the current address in the PC and at the current privilege level. If any register (such as the PC or SR) is altered by a BDM command while the processor is halted, the updated value is used when prefetching resumes. If a GO command is issued and the CPU is not halted, the command is ignored.

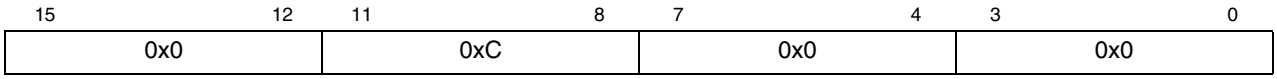

Figure 5-29. GO Command Format

Command Sequence:

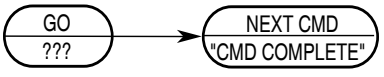

Figure 5-30. GO Command Sequence

Operand Data: None

Result Data: The command-complete response (0xFFFF) is returned during the next shift operation.

5.5.3.3.8 No Operation (NOP)

NOP performs no operation and may be used as a null command where required.

Command Formats:

15 12	11 8	7 4	3 0
0x0	0x0	0x0	0x0

Figure 5-31. NOP Command Format

Command Sequence:

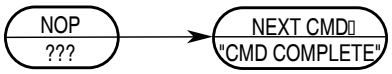

Figure 5-32. NOP Command Sequence

Operand Data: None

Result Data: The command-complete response, 0xFFFF (with S cleared), is returned during the next shift operation.

5.5.3.3.9 Read Control Register (RCREG)

Read the selected control register and return the 32-bit result. Accesses to the processor/memory control registers are always 32 bits wide, regardless of register width. The second and third words of the command form a 32-bit address, which the debug module uses to generate a special bus cycle to access the specified control register. The 12-bit Rc field is the same as that used by the MOVEC instruction.

Command/Result Formats:

	15 12	11 8	7 4	3 0
Command	0x2	0x9	0x8	0x0
	0x0	0x0	0x0	0x0
	0x0	Rc		
Result	D[31:16]			
	D[15:0]			

Figure 5-33. RCREG Command/Result Formats

Rc encoding:

Table 5-19. Control Register Map

Rc	Register Definition
0x002	Cache control register (CACR)
0x004	Access control register 0 (ACR0)
0x005	Access control register 1 (ACR1)
0x801	Vector base register (VBR)
0x804	MAC status register (MACSR)
0x805	MAC mask register (MASK)

Rc	Register Definition
0x806	MAC accumulator (ACC)
0x80E	Status register (SR)
0x80F	Program register (PC)
0xC04	RAM base address register (RAMBAR)
0xC0F	Module base address (MBAR)

Command Sequence:

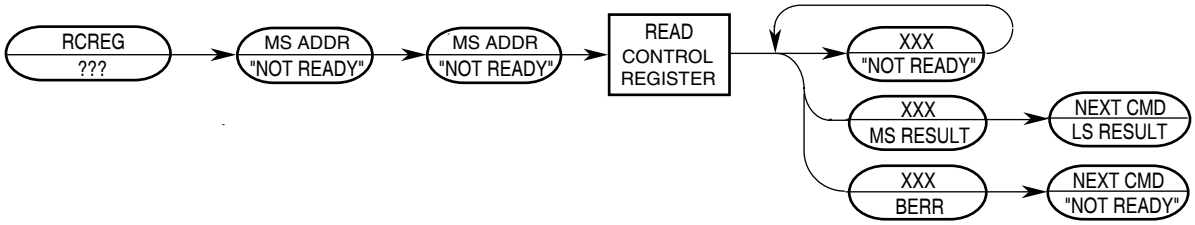

Figure 5-34. RCREG Command Sequence

Operand Data: The only operand is the 32-bit Rc control register select field.

Result Data: Control register contents are returned as a longword, most-significant word first. The implemented portion of registers smaller than 32 bits is guaranteed correct; other bits are undefined.

5.5.3.3.10 Write Control Register (WCREG)

The operand (longword) data is written to the specified control register. The write alters all 32 register bits.

Command/Result Formats:

	15–12	11–8	7–4	3–0
Command	0x2	0x8	0x8	0x0
	0x0	0x0	0x0	0x0
	0x0	Rc		
Result	D[31:16]			
	D[15:0]			

Figure 5-35. WCREG Command/Result Formats

Command Sequence:

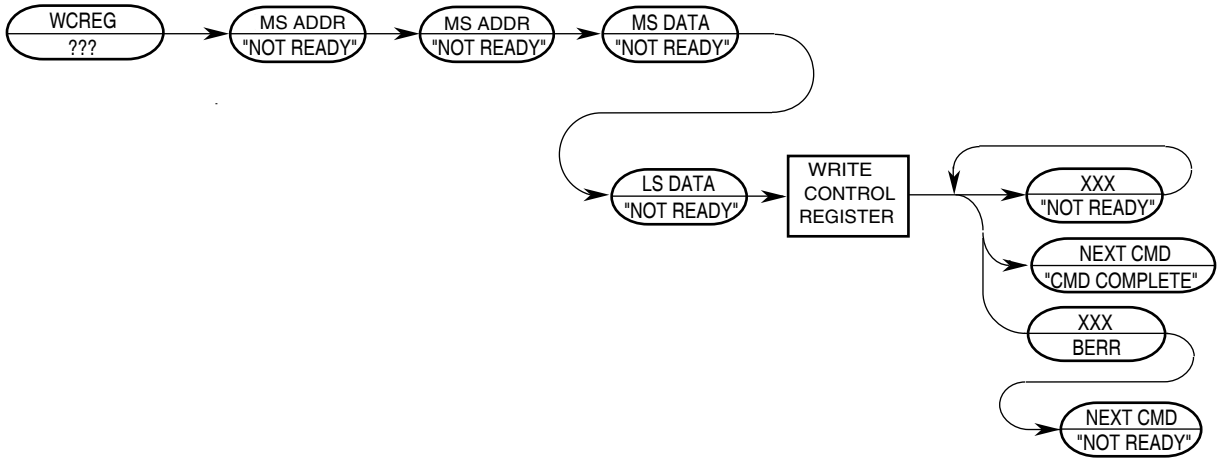

Figure 5-36. WCREG Command Sequence

Operand Data: This instruction requires two longword operands. The first selects the register to which the operand data is to be written; the second contains the data.

Result Data: Successful write operations return 0xFFFF. Bus errors on the write cycle are indicated by the setting of bit 16 in the status message and by a data pattern of 0x0001.

5.5.3.3.11 Read Debug Module Register (RDMREG)

Read the selected debug module register and return the 32-bit result. The only valid register selection for the RDMREG command is CSR (DRc = 0x00). Note that this read of the CSR clears CSR[FOF, TRG, HALT, BKPT]; as well as the trigger status bits (CSR[BSTAT]) if either a level-2 breakpoint has been triggered or a level-1 breakpoint has been triggered and no level-2 breakpoint has been enabled.

Command/Result Formats:

	15–12	11–8	7–5	4–0
Command	0x2	0xD	100	DRc
Result	D[31:16]			
	D[15:0]			

Figure 5-37. RDMREG BDM Command/Result Formats

Table 5-20 shows the definition of DRc encoding.

Table 5-20. Definition of DRc Encoding—Read

DRc[4:0]	Debug Register Definition	Mnemonic	Initial State	Page
0x00	Configuration/Status	CSR	0x0	p. 5-10
0x01–0x1F	Reserved	—	—	—

Command Sequence:

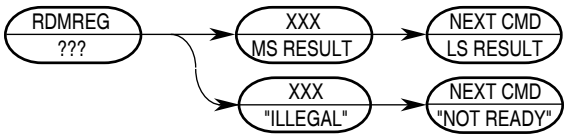

Figure 5-38. RDMREG Command Sequence

Operand Data: None

Result Data: The contents of the selected debug register are returned as a longword value. The data is returned most-significant word first.

5.5.3.3.12 Write Debug Module Register (WDMREG)

The operand (longword) data is written to the specified debug module register. All 32 bits of the register are altered by the write. DSCLK must be inactive while the debug module register writes from the CPU accesses are performed using the WDEBUG instruction.

Command Format:

Figure 5-39. WDMREG BDM Command Format

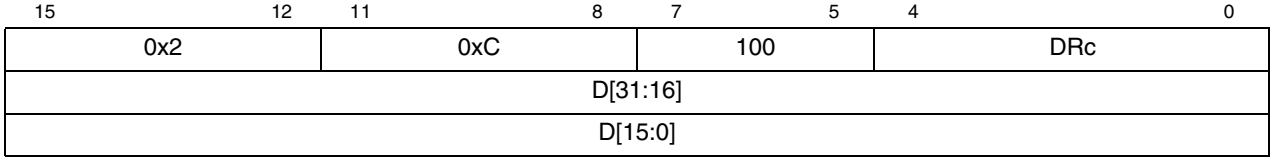

Table 5-3 shows the definition of the DRc write encoding.

Command Sequence:

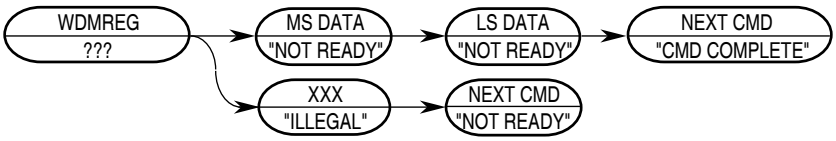

Figure 5-40. WDMREG Command Sequence

Operand Data: Longword data is written into the specified debug register. The data is supplied most-significant word first.

Result Data: Command complete status (0xFFFF) is returned when register write is complete.

5.6 Real-Time Debug Support

The ColdFire Family provides support debugging real-time applications. For these types of embedded systems, the processor must continue to operate during debug. The foundation of this area of debug support is that while the processor cannot be halted to allow debugging, the system can generally tolerate small intrusions into the real-time operation.

The debug module provides three types of breakpoints—PC with mask, operand address range, and data with mask. These breakpoints can be configured into one- or two-level triggers with the exact trigger response also programmable. The debug module programming model can be written from either the external development system using the debug serial interface or from the processor's supervisor programming model using the WDEBUG instruction. Only CSR is readable using the external development system.

5.6.1 Theory of Operation

Breakpoint hardware can be configured to respond to triggers in several ways. The response desired is programmed into TDR. As shown in Table 5-21, when a breakpoint is triggered, an indication (CSR[BSTAT]) is provided on the DDATA output port when it is not displaying captured processor status, operands, or branch addresses.

Table 5-21. DDATA[3:0]/CSR[BSTAT] Breakpoint Response

DDATA[3:0]/CSR[BSTAT] [1]	Breakpoint Status
0000/0000	No breakpoints enabled
0010/0001	Waiting for level-1 breakpoint
0100/0010	Level-1 breakpoint triggered
1010/0101	Waiting for level-2 breakpoint
1100/0110	Level-2 breakpoint triggered

[1] Encodings not shown are reserved for future use.

The breakpoint status is also posted in CSR. Note that CSR[BSTAT] is cleared by a CSR read when either a level-2 breakpoint is triggered or a level-1 breakpoint is triggered and a level-2 breakpoint is not enabled. Status is also cleared by writing to TDR.

BDM instructions use the appropriate registers to load and configure breakpoints. As the system operates, a breakpoint trigger generates the response defined in TDR.

PC breakpoints are treated in a precise manner—exception recognition and processing are initiated before the excepting instruction is executed. All other breakpoint events are recognized on the processor's local bus, but are made pending to the processor and sampled like other interrupt conditions. As a result, these interrupts are imprecise.

In systems that tolerate the processor being halted, a BDM-entry can be used. With TDR[TRC] = 01, a breakpoint trigger causes the core to halt (PST = 0xF).

If the processor core cannot be halted, the debug interrupt can be used. With this configuration, TDR[TRC] = 10, the breakpoint trigger becomes a debug interrupt to the processor, which is treated higher than the nonmaskable level-7 interrupt request. As with all interrupts, it is made pending until the processor reaches a sample point, which occurs once per instruction. Again, the hardware forces the PC breakpoint to occur before the targeted instruction executes. This is possible because the PC breakpoint is enabled when interrupt sampling occurs. For address and data breakpoints, reporting is considered imprecise because several instructions may execute after the triggering address or data is detected.

As soon as the debug interrupt is recognized, the processor aborts execution and initiates exception processing. This event is signaled externally by the assertion of a unique PST value (PST = 0xD) for multiple cycles. The core enters emulator mode when exception processing begins. After the standard 8-byte exception stack is created, the processor fetches a unique exception vector, 12, from the vector table.

Execution continues at the instruction address in the vector corresponding to the breakpoint triggered. All interrupts are ignored while the processor is in emulator mode. The debug interrupt handler can use supervisor instructions to save the necessary context such as the state of all program-visible registers into a reserved memory area.

When debug interrupt operations complete, the RTE instruction executes and the processor exits emulator mode. After the debug interrupt handler completes execution, the external development system can use BDM commands to read the reserved memory locations.

If a hardware breakpoint such as a PC trigger is left unmodified by the debug interrupt service routine, another debug interrupt is generated after the completion of the RTE instruction.

5.6.1.1 Emulator Mode

Emulator mode is used to facilitate non-intrusive emulator functionality. This mode can be entered in three different ways:

- Setting CSR[EMU] forces the processor into emulator mode. EMU is examined only if $\overline{\text{RSTI}}$ is negated and the processor begins reset exception processing. It can be set while the processor is halted before reset exception processing begins. See Section 5.5.1, “CPU Halt.”
- A debug interrupt always puts the processor in emulation mode when debug interrupt exception processing begins.
- Setting CSR[TRC] forces the processor into emulation mode when trace exception processing begins.

While operating in emulation mode, the processor exhibits the following properties:

- All interrupts are ignored, including level-7 interrupts.
- If CSR[MAP] = 1, all caching of memory and the SRAM module are disabled. All memory accesses are forced into a specially mapped address space signaled by TT = 0x2, TM = 0x5 or 0x6. This includes stack frame writes and the vector fetch for the exception that forced entry into this mode.

The RTE instruction exits emulation mode. The processor status output port provides a unique encoding for emulator mode entry (0xD) and exit (0x7).

5.6.2 Concurrent BDM and Processor Operation

The debug module supports concurrent operation of both the processor and most BDM commands. BDM commands may be executed while the processor is running, except those following operations that access processor/memory registers:

- Read/write address and data registers
- Read/write control registers

For BDM commands that access memory, the debug module requests the processor’s local bus. The processor responds by stalling the instruction fetch pipeline and waiting for current bus activity to complete before freeing the local bus for the debug module to perform its access. After the debug module bus cycle, the processor reclaims the bus.

Breakpoint registers must be carefully configured in a development system if the processor is executing. The debug module contains no hardware interlocks, so TDR should be disabled while breakpoint registers are loaded, after which TDR can be written to define the exact trigger. This prevents spurious breakpoint triggers.

Because there are no hardware interlocks in the debug unit, no BDM operations are allowed while the CPU is writing the debug's registers (DSCLK must be inactive).

Note that the debug module requires the use of the internal bus to perform BDM commands. In Revision A, if the processor is executing a tight loop that is contained within a single aligned longword, the processor may never grant the internal bus to the debug module, for example:

```
        align4
label1: nop
        bra.b label1
```

or

```
        align4
label2: bra.w label2
```

The processor grants the internal bus if these loops are forced across two longwords.

5.7 Processor Status, DDATA Definition

This section specifies the ColdFire processor and debug module's generation of the processor status (PST) and debug data (DDATA) output on an instruction basis. In general, the PST/DDATA output for an instruction is defined as follows:

PST = 0x1, {PST = [0x89B], DDATA= operand}

where the {...} definition is optional operand information defined by the setting of the CSR.

The CSR provides capabilities to display operands based on reference type (read, write, or both). A PST value {0x8, 0x9, or 0xB} identifies the size and presence of valid data to follow on the DDATA output {1, 2, or 4 bytes}. Additionally, for certain change-of-flow branch instructions, CSR[BTB] provides the capability to display the target instruction address on the DDATA output {2, 3, or 4 bytes} using a PST value of {0x9, 0xA, or 0xB}.

5.7.1 User Instruction Set

Table 5-22 shows the PST/DDATA specification for user-mode instructions. Rn represents any {Dn, An} register. In this definition, the 'y' suffix generally denotes the source and 'x' denotes the destination operand. For a given instruction, the optional operand data is displayed only for those effective addresses referencing memory.The 'DD' nomenclature refers to the DDATA outputs.

Table 5-22. PST/DDATA Specification for User-Mode Instructions

Instruction	Operand Syntax	PST/DDATA
add.l	<ea>y,Rx	PST = 0x1, {PST = 0xB, DD = source operand}
add.l	Dy,<ea>x	PST = 0x1, {PST = 0xB, DD = source}, {PST = 0xB, DD = destination}
addi.l	#imm,Dx	PST = 0x1
addq.l	#imm,<ea>x	PST = 0x1, {PST = 0xB, DD = source}, {PST = 0xB, DD = destination}
addx.l	Dy,Dx	PST = 0x1
and.l	<ea>y,Dx	PST = 0x1, {PST = 0xB, DD = source operand}
and.l	Dy,<ea>x	PST = 0x1, {PST = 0xB, DD = source}, {PST = 0xB, DD = destination}
andi.l	#imm,Dx	PST = 0x1
asl.l	{Dy,#imm},Dx	PST = 0x1
asr.l	{Dy,#imm},Dx	PST = 0x1
bcc.{b,w}		if taken, then PST = 0x5, else PST = 0x1
bchg	#imm,<ea>x	PST = 0x1, {PST = 0x8, DD = source}, {PST = 0x8, DD = destination}
bchg	Dy,<ea>x	PST = 0x1, {PST = 0x8, DD = source}, {PST = 0x8, DD = destination}
bclr	#imm,<ea>x	PST = 0x1, {PST = 0x8, DD = source}, {PST = 0x8, DD = destination}
bclr	Dy,<ea>x	PST = 0x1, {PST = 0x8, DD = source}, {PST = 0x8, DD = destination}
bra.{b,w}		PST = 0x5
bset	#imm,<ea>x	PST = 0x1, {PST = 0x8, DD = source}, {PST = 0x8, DD = destination}
bset	Dy,<ea>x	PST = 0x1, {PST = 0x8, DD = source}, {PST = 0x8, DD = destination}
bsr.{b,w}		PST = 0x5, {PST = 0xB, DD = destination operand}
btst	#imm,<ea>x	PST = 0x1, {PST = 0x8, DD = source operand}
btst	Dy,<ea>x	PST = 0x1, {PST = 0x8, DD = source operand}
clr.b	<ea>x	PST = 0x1, {PST = 0x8, DD = destination operand}
clr.l	<ea>x	PST = 0x1, {PST = 0xB, DD = destination operand}
clr.w	<ea>x	PST = 0x1, {PST = 0x9, DD = destination operand}
cmp.l	<ea>y,Rx	PST = 0x1, {PST = 0xB, DD = source operand}
cmpi.l	#imm,Dx	PST = 0x1
divs.l	<ea>y,Dx	PST = 0x1, {PST = 0xB, DD = source operand}
divs.w	<ea>y,Dx	PST = 0x1, {PST = 0x9, DD = source operand}
divu.l	<ea>y,Dx	PST = 0x1, {PST = 0xB, DD = source operand}
divu.w	<ea>y,Dx	PST = 0x1, {PST = 0x9, DD = source operand}
eor.l	Dy,<ea>x	PST = 0x1, {PST = 0xB, DD = source}, {PST = 0xB, DD = destination}
eori.l	#imm,Dx	PST = 0x1
ext.l	Dx	PST = 0x1
ext.w	Dx	PST = 0x1
extb.l	Dx	PST = 0x1
jmp	<ea>x	PST = 0x5, {PST = [0x9AB], DD = target address} [1]
jsr	<ea>x	PST = 0x5, {PST = [0x9AB], DD = target address}, {PST = 0xB , DD = destination operand}[1]
lea	<ea>y,Ax	PST = 0x1
link.w	Ay,#imm	PST = 0x1, {PST = 0xB, DD = destination operand}

Table 5-22. PST/DDATA Specification for User-Mode Instructions (continued)

Instruction	Operand Syntax	PST/DDATA
lsl.l	{Dy,#imm},Dx	PST = 0x1
lsr.l	{Dy,#imm},Dx	PST = 0x1
mac.l		PST = 0x1
mac.l	Ry,Rx	PST = 0x1
mac.l	Ry,Rx,ea,Rw	PST = 0x1, {PST = 0xB, DD = source operand}
mac.w		PST = 0x1
mac.w	Ry,Rx	PST = 0x1
mac.w	Ry,Rx,ea,Rw	PST = 0x1, {PST = 0xB, DD = source operand}
move.b	<ea>y,<ea>x	PST = 0x1, {PST = 0x8, DD = source}, {PST = 0x8, DD = destination}
move.l	<ea>y,<ea>x	PST = 0x1, {PST = 0xB, DD = source}, {PST = 0xB, DD = destination}
move.l	<ea>y,ACC	PST = 0x1
move.l	<ea>y,MACSR	PST = 0x1
move.l	<ea>y,MASK	PST = 0x1
move.l	ACC,Rx	PST = 0x1
move.l	MACSR,CCR	PST = 0x1
move.l	MACSR,Rx	PST = 0x1
move.l	MASK,Rx	PST = 0x1
move.w	<ea>y,<ea>x	PST = 0x1, {PST = 0x9, DD = source}, {PST = 0x9, DD = destination}
move.w	CCR,Dx	PST = 0x1
move.w	{Dy,#imm},CCR	PST = 0x1
movem.l	#list,<ea>x	PST = 0x1, {PST = 0xB, DD = destination},... [2]
movem.l	<ea>y,#list	PST = 0x1, {PST = 0xB, DD = source},... [2]
moveq	#imm,Dx	PST = 0x1
msac.l	Ry,Rx	PST = 0x1
msac.l	Ry,Rx,ea,Rw	PST = 0x1, {PST = 0xB, DD = source}, {PST = 0xB, DD = destination}
msac.w	Ry,Rx	PST = 0x1
msac.w	Ry,Rx,ea,Rw	PST = 0x1, {PST = 0xB, DD = source}, {PST = 0xB, DD = destination}
muls.l	<ea>y,Dx	PST = 0x1, {PST = 0xB, DD = source operand}
muls.w	<ea>y,Dx	PST = 0x1, {PST = 0x9, DD = source operand}
mulu.l	<ea>y,Dx	PST = 0x1, {PST = 0xB, DD = source operand}
mulu.w	<ea>y,Dx	PST = 0x1, {PST = 0x9, DD = source operand}
neg.l	Dx	PST = 0x1
negx.l	Dx	PST = 0x1
nop		PST = 0x1
not.l	Dx	PST = 0x1
or.l	<ea>y,Dx	PST = 0x1, {PST = 0xB, DD = source operand}
or.l	Dy,<ea>x	PST = 0x1, {PST = 0xB, DD = source}, {PST = 0xB, DD = destination}
ori.l	#imm,Dx	PST = 0x1
pea	<ea>y	PST = 0x1, {PST = 0xB, DD = destination operand}
pulse		PST = 0x4

Table 5-22. PST/DDATA Specification for User-Mode Instructions (continued)

Instruction	Operand Syntax	PST/DDATA
rems.l	<ea>y,Dx:Dw	PST = 0x1, {PST = 0xB, DD = source operand}
remu.l	<ea>y,Dx:Dw	PST = 0x1, {PST = 0xB, DD = source operand}
rts		PST = 0x1, {PST = 0xB, DD = source operand}, PST = 0x5, {PST = [0x9AB], DD = target address}
scc	Dx	PST = 0x1
sub.l	<ea>y,Rx	PST = 0x1, {PST = 0xB, DD = source operand}
sub.l	Dy,<ea>x	PST = 0x1, {PST = 0xB, DD = source}, {PST = 0xB, DD = destination}
subi.l	#imm,Dx	PST = 0x1
subq.l	#imm,<ea>x	PST = 0x1, {PST = 0xB, DD = source}, {PST = 0xB, DD = destination}
subx.l	Dy,Dx	PST = 0x1
swap	Dx	PST = 0x1
trap	#imm	PST = 0x1[3]
trapf		PST = 0x1
tst.b	<ea>x	PST = 0x1, {PST = 0x8, DD = source operand}
tst.l	<ea>x	PST = 0x1, {PST = 0xB, DD = source operand}
tst.w	<ea>x	PST = 0x1, {PST = 0x9, DD = source operand}
unlk	Ax	PST = 0x1, {PST = 0xB, DD = destination operand}
wddata.b	<ea>y	PST = 0x4, {PST = 0x8, DD = source operand
wddata.l	<ea>y	PST = 0x4, {PST = 0xB, DD = source operand
wddata.w	<ea>y	PST = 0x4, {PST = 0x9, DD = source operand

1 For JMP and JSR instructions, the optional target instruction address is displayed only for those effective address fields defining variant addressing modes. This includes the following <ea>x values: (An), (d16,An), (d8,An,Xi), (d8,PC,Xi).

2 For Move Multiple instructions (MOVEM), the processor automatically generates line-sized transfers if the operand address reaches a 0-modulo-16 boundary and there are four or more registers to be transferred. For these line-sized transfers, the operand data is never captured nor displayed, regardless of the CSR value.
The automatic line-sized burst transfers are provided to maximize performance during these sequential memory access operations.

3 During normal exception processing, the PST output is driven to a 0xC indicating the exception processing state. The exception stack write operands, as well as the vector read and target address of the exception handler may also be displayed.

```
Exception ProcessingPST = 0xC,{PST = 0xB,DD = destination},// stack frame
                  {PST = 0xB,DD = destination},// stack frame
                  {PST = 0xB,DD = source},// vector read
         PST = 0x5,{PST = [0x9AB],DD = target}// handler PC
```

The PST/DDATA specification for the reset exception is shown below:

```
Exception ProcessingPST = 0xC,
         PST = 0x5,{PST = [0x9AB],DD = target}// handler PC
```

The initial references at address 0 and 4 are never captured nor displayed since these accesses are treated as instruction fetches.

For all types of exception processing, the PST = 0xC value is driven at all times, unless the PST output is needed for one of the optional marker values or for the taken branch indicator (0x5).

5.7.2 Supervisor Instruction Set

The supervisor instruction set has complete access to the user mode instructions plus the opcodes shown below. The PST/DDATA specification for these opcodes is shown in Table 5-23.

Table 5-23. PST/DDATA Specification for Supervisor-Mode Instructions

Instruction	Operand Syntax	PST/DDATA
cpushl		PST = 0x1
halt		PST = 0x1, PST = 0xF
move.w	SR,Dx	PST = 0x1
move.w	{Dy,#imm},SR	PST = 0x1, {PST = 0x3}
movec	Ry,Rc	PST = 0x1
rte		PST = 0x7, {PST = 0xB, DD = source operand}, {PST = 3},{ PST =0xB, DD =source operand}, PST = 0x5, {[PST = 0x9AB], DD = target address}
stop	#imm	PST = 0x1, PST = 0xE
wdebug	<ea>y	PST = 0x1, {PST = 0xB, DD = source, PST = 0xB, DD = source}

The move-to-SR and RTE instructions include an optional PST = 0x3 value, indicating an entry into user mode. Additionally, if the execution of a RTE instruction returns the processor to emulator mode, a multiple-cycle status of 0xD is signaled.

Similar to the exception processing mode, the stopped state (PST = 0xE) and the halted state (PST = 0xF) display this status throughout the entire time the ColdFire processor is in the given mode.

5.8 Freescale-Recommended BDM Pinout

The ColdFire BDM connector, Figure 5-41, is a 26-pin Berg connector arranged 2 x 13.

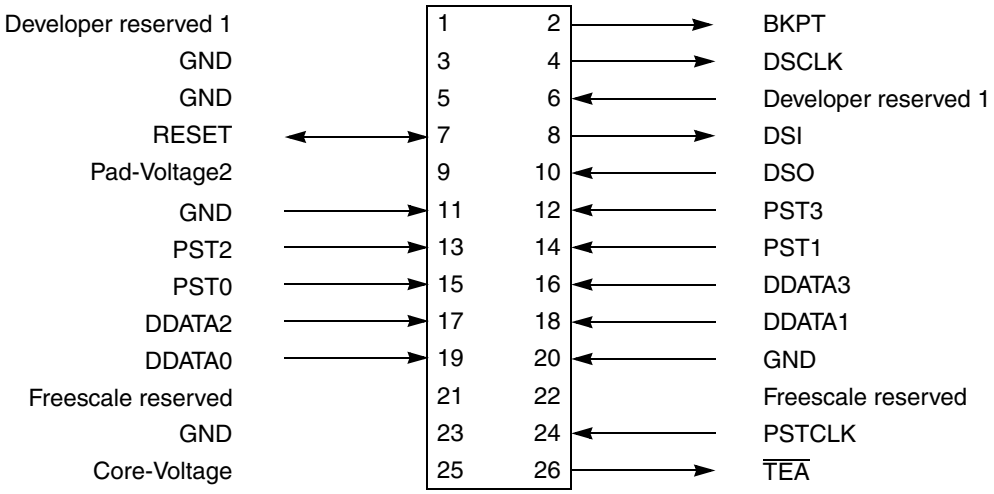

1Pins reserved for BDM developer use.
2Supplied by target

Figure 5-41. Recommended BDM Connector

Chapter 6
System Integration Module (SIM)

This chapter provides detailed operation information regarding the system integration module (SIM). It describes the SIM programming model, bus arbitration, power management, and system-protection functions for the MCF5272.

6.1 Features

The SIM, shown in Figure 6-1, provides overall control of the bus and serves as the interface between the ColdFire core processor complex and the internal peripheral devices.

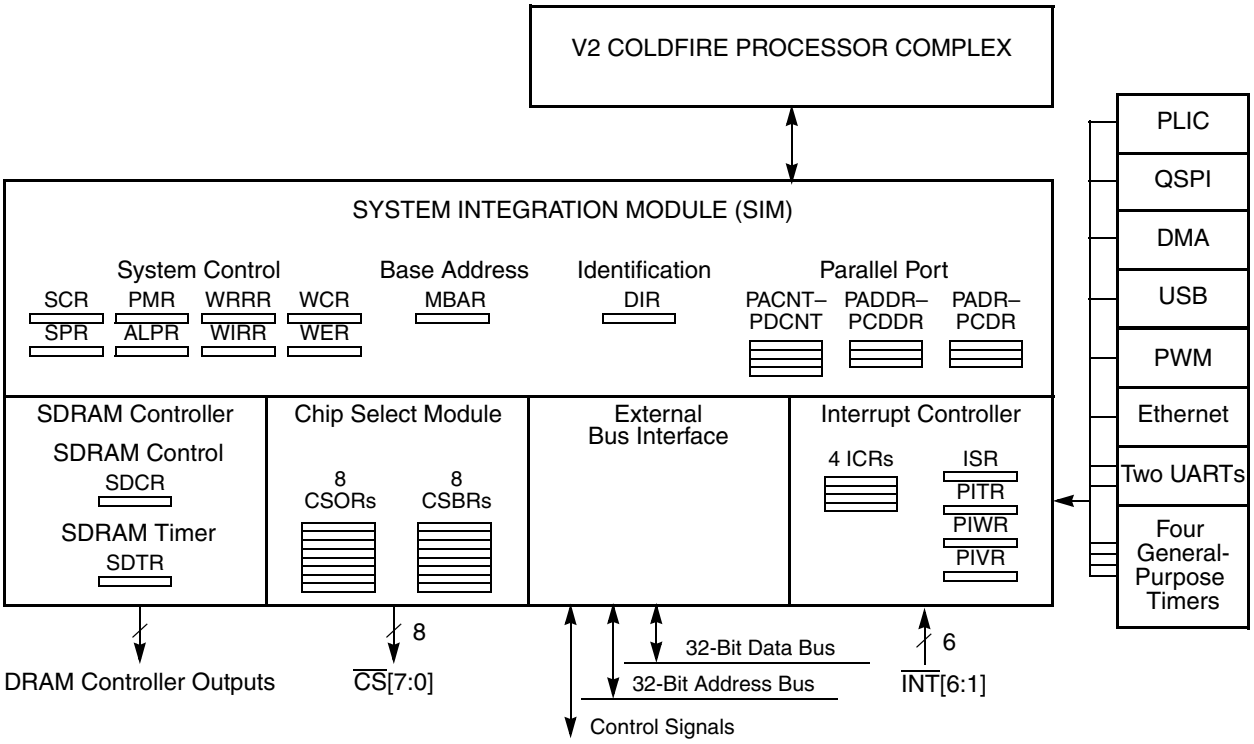

Figure 6-1. SIM Block Diagram

The following is a list of the key SIM features:

- Module base address register (MBAR)
  - Base address location of all internal peripherals, SIM resources, and memory-mapped registers
  - Address space masking to internal peripherals and SIM resources
- Interrupt controller
  - Programmable interrupt level (1–7) for internal peripheral interrupts
  - Up to six external interrupt request inputs
  - See Chapter 7, “Interrupt Controller.”
- Chip select module
  - Eight dedicated programmable chip selects
  - Address masking for memory block sizes from 4 Kbytes to 2 Gbytes
  - Programmable wait states and port sizes
  - Programmable address setup
  - Programmable address hold for read and write
  - SDRAM controller interface supported with $\overline{\text{CS7}}$/$\overline{\text{SDCS}}$

  See Chapter 8, “Chip Select Module.”
- System protection
  - Hardware watchdog timer. See Section 6.2.3, “System Configuration Register (SCR).”
  - Software watchdog timer. See Section 6.2.8, “Software Watchdog Timer
- Pin assignment register (PAR) configures the parallel port. See Section 6.2.3, “System Configuration Register (SCR).”
- Power management
  - Individual control for each on-chip peripheral
  - Choice of low-power modes

  See Section 6.2.5, “Power Management Register (PMR).”
- Bus arbitration
  - Configure arbitration for internal bus among ColdFire core, Ethernet controller, and DMA controller. See Section 6.2.3, “System Configuration Register (SCR).”

6.2 Programming Model

The following sections describe the registers incorporated into the SIM.

6.2.1 SIM Register Memory Map

Table 6-1 shows the memory map for the SIM registers. The internal registers in the SIM are memory-mapped registers offset from the MBAR address pointer defined in MBAR[BA]. This supervisor-level register is described in Section 6.2.2, “Module Base Address Register (MBAR).” Because SIM registers depend on the base address defined in MBAR[BA], MBAR must be programmed before SIM registers can be accessed.

Table 6-1. SIM Registers

MBAR Offset	[31:24]	[23:16]	[15:8]	[7:0]
0x000	Module base address register (MBAR), after initialization [p. 6-3]			
0x004	System configuration register (SCR) [p. 6-5]		System protection register (SPR) [p. 6-6]	
0x008	Power management register (PMR) [p. 6-7]			
0x00C	Reserved		Active low power register (ALPR) [p. 6-10]	
0x010	Device identification register (DIR) [p. 6-11]			
0x014–0x01C	Reserved			
Interrupt Controller Registers				
0x020	Interrupt control register 1 (ICR1) [p. 7-4]			
0x024	Interrupt control register 2 (ICR2) [p. 7-5]			
0x028	Interrupt control register 3 (ICR3) [p. 7-5]			
0x02C	Interrupt control register 4 (ICR4) [p. 7-5]			
0x030	Interrupt source register (ISR) [p. 7-6]			
0x034	Programmable interrupt transition register (PITR) [p. 7-7]			
0x038	Programmable interrupt wakeup register (PIWR) [p. 7-8]			
0x03C	Reserved			Programmable interrupt vector register (PIVR) [p. 7-9]
Software Watchdog Registers				
0x280	Watchdog reset reference register (WRRR) [p. 6-12]		Reserved	
0x284	Watchdog interrupt reference register (WIRR) [p. 6-12]		Reserved	
0x288	Watchdog counter register (WCR) [p. 6-13]		Reserved	
0x28C	Watchdog event register (WER) [p. 6-13]		Reserved	

6.2.2 Module Base Address Register (MBAR)

The supervisor-level MBAR, Figure 6-2, specifies the base address and allowable access types for all internal peripherals. It is written with a MOVEC instruction using the CPU address 0xC0F. (See the *ColdFire Family Programmer's Reference Manual*.) MBAR can be read or written through the debug module as a read/write register, as described in." Once MBAR has been initialized, it can be read and written in supervisor mode at the address programmed into the base address (BA) field.

The valid bit, MBAR[V], is cleared at system reset to prevent incorrect references before MBAR is written; other MBAR bits are uninitialized at reset. To access internal peripherals, write MBAR with the appropriate base address (BA) and set MBAR[V] after system reset.

All internal peripheral registers occupy a single relocatable memory block along 64-Kbyte boundaries. If MBAR[V] is set, MBAR[BA] is compared to the upper 16 bits of the full 32-bit internal address to

determine if an internal peripheral is being accessed. MBAR masks specific address spaces using the address space fields. Attempts to access a masked address space generate an external bus access.

Addresses hitting overlapping memory spaces take the following priority:

1. SRAM, ROM, and cache
2. MBAR
3. Chip select

Thus, if an overlapping address hits in the SRAM, ROM, or cache, the SIM will not generate a bus cycle, either externally or to an on-chip peripheral.

NOTE

The MBAR region must be mapped to non-cacheable space.

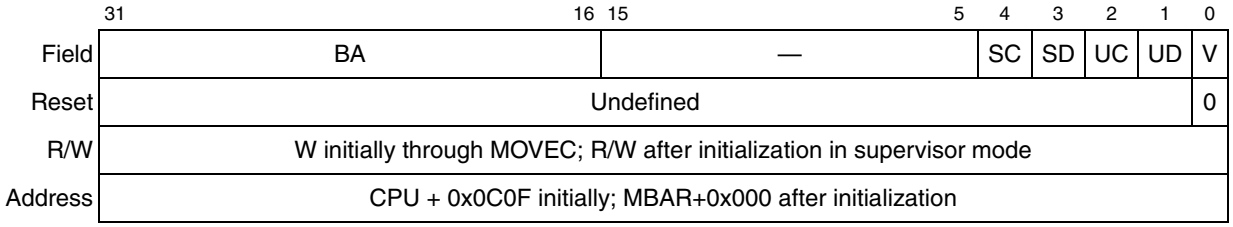

Figure 6-2. Module Base Address Register (MBAR)

Table 6-2 describes MBAR fields.

Table 6-2. MBAR Field Descriptions

Bits	Field	Description
31–16	BA	Base address. Defines the base address for a 64-Kbyte address range.
15–5	—	Reserved, should be cleared.
4	SC	Setting masks supervisor code space in MBAR address range
3	SD	Setting masks supervisor data space in MBAR address range
2	UC	Setting masks user code space in MBAR address range Attribute Mask Bits
1	UD	Setting masks user data space in MBAR address range
0	V	Valid. Determines whether MBAR settings are valid. 0 MBAR contents are invalid. 1 MBAR contents are valid.

The following example shows how to set the MBAR to location 0x1000_0000 using the D0 register. Setting MBAR[V] validates the MBAR location. This example assumes all accesses are valid:

```
move.1 #0x10000001,DO
movec DO,MBAR
```

6.2.3 System Configuration Register (SCR)

The system configuration register (SCR), Figure 6-3, provides information and control for a variety of system features.

	15	14	13 12	11 9	8	7	6	5 4	3	2 0
Field	1	0	RSTSRC	—	Priority	AR	SoftRST	—	BusLock	HWR
Reset	1	0	see Table 6-3	0000_1000_0111						
R/W	R/W; except for RSTSRC[1:0], which are read only									
Address	MBAR + 0x004									

Figure 6-3. System Configuration Register (SCR)

Table 6-3 describes SCR fields.

Table 6-3. SCR Field Descriptions

Bits	Field	Description
15-14	—	Reserved. Bit 15 always reads as a 1, bit 14 as a 0. Writing to these bits has no effect.
13–12	RSTSRC	Reset source. Indicates the source of the last device reset. 00 Reserved 01 $\overline{\text{RSTI}}$ asserted, $\overline{\text{DRESETEN}}$ not asserted 10 Software watchdog 11 $\overline{\text{RSTI}}$ and $\overline{\text{DRESETEN}}$ asserted
11–9	—	Reserved, should be cleared.
8	Priority	Selects the bus arbiter priority scheme. 0 Ethernet has highest priority, DMA has next highest priority, CPU has lowest priority. 1 CPU has highest priority, DMA has next highest priority, Ethernet has lowest priority. This bit should be cleared if the Ethernet module is enabled.
7	AR	Assume request. Selects the bus mastership scheme. 0 Current bus master relinquishes the bus after the current bus cycle. 1 Assume current bus master wants the bus for the next bus cycle and include it in the arbitration process. If AR is set and the current bus master has a higher priority than other requesting masters but is not requesting the bus for the next cycle, there is a 1 clock dead cycle before the arbiter can reassign the bus to the next highest priority master.
6	SoftRST	Writing a one to this bit resets the on-chip peripherals, excluding the chip select module, interrupt controller module, GPIO module, and SDRAM controller, and asserts $\overline{\text{RSTO}}$. The CPU is not reset. The reset remains asserted for 128 clock cycles. This bit is automatically cleared on negation of the reset.
5–4	—	Reserved, should be cleared.

Table 6-3. SCR Field Descriptions (continued)

Bits	Field	Description
3	BusLock	Locks the ownership of the bus. 0 Ownership of the bus is determined by arbitration. 1 Current bus master retains ownership of the bus indefinitely.
2–0	HWR	Hardware watchdog reference. Determines how many clocks to wait before timing out a bus cycle when SPR[HWTEN] is set. The value programmed should be longer than the response time of the slowest external peripheral in the system. 000 128 001 256 010 512 011 1024 100 2048 101 4096 110 8192 111 16384

6.2.4 System Protection Register (SPR)

The system protection register (SPR), Figure 6-4, provides information about bus cycles that have generated error conditions. These error conditions can optionally generate an access error exception by using the enable bits.

	15	14	13	12	11	10	9	8
Field	ADC	WPV	SMV	PE	HWT	RPV	EXT	SUV
Reset	0000_0000							
R/W	R/W							

	7	6	5	4	3	2	1	0
Field	ADCEN	WPVEN	SMVEN	PEEN	HWTEN	RPVEN	EXTEN	SUVEN
Reset	0000_1011							
R/W	R/W							
Address	MBAR + 0x006							

Figure 6-4. System Protection Register (SPR)

Table 6-4 describes SPR fields.

Table 6-4. SPR Field Descriptions

Bits	Fields	Description
15, 7	ADC, ADCEN	Address decode conflict. This bit is set when an address matches against two chip selects. If ADCEN is also set, the bus cycle is terminated with an access error exception.
14, 6	WPV, WPVEN	Write protect violation. This bit is set when a write access is attempted to an area for which the chip select is set to read only. If WPVEN is also set, the bus cycle is terminated with an access error exception.
13, 5	SMV, SMVEN	Stopped module violation. This bit is set when an access is attempted to an on-chip peripheral whose clock has been stopped. If SMVEN is also set, the bus cycle is terminated with an access error exception.
12, 4	PE, PEEN	Peripheral error. This bit is set when an access to an on-chip peripheral is terminated with a transfer error. If PEEN is also set, the bus cycle is terminated with an access error exception.

Table 6-4. SPR Field Descriptions (continued)

Bits	Fields	Description
11, 3	HWT, HWTEN	Hardware watchdog timeout. This bit is set when the hardware watchdog timer has reached its programmed timeout value. If HWTEN is also set, the bus cycle is terminated with an access error exception.
10, 2	RPV, RPVEN	Read protect violation. This bit is set when a read access is attempted to an area for which the chip select is set to write only. If RPVEN is also set, the bus cycle is terminated with an access error exception.
9, 1	EXT, EXTEN	External transfer error. This bit is set when an external transfer error is reported to the SIM on $\overline{\text{TEA}}$. If EXTEN is also set, the bus cycle is terminated with an access error exception.
8, 0	SUV, SUVEN	Supervisor/user violation. This bit is set when a user mode access is attempted to an area for which the chip select is set to supervisor only. If SUVEN is also set, the bus cycle is terminated with an access error exception.

6.2.5 Power Management Register (PMR)

The power management register (PMR), Figure 6-5, is used to control the various low-power options including low-power sleep, low-power stop, and powering down individual on-chip modules.

	31	30	27	26	25	24
Field	BDMPDN	—		ENETPDN	PLIPDN	DRAMPDN
Reset	0000_0000					
R/W	R/W, Supervisor mode only					

	23	22	21	20	19	18	17	16
Field	DMAPDN	PWMPDN	QSPIPDN	TIMERPDN	GPIOPDN	USBPDN	UART1PDN	UART0PDN
Reset	0000_0000							
R/W	R/W, Supervisor mode only							

	15	11	10	9	8
Field	—		USBWK	UART1WK	UART0WK
Reset	0000_0000				
R/W	R/W, Supervisor mode only				

	7	6	5	4	3	0
Field	—		MOS	SLPEN	—	
Reset	0000_0000					
R/W	R/W, Supervisor mode only					
Address	MBAR+0x008					

Figure 6-5. Power Management Register (PMR)

Table 6-5 describes PMR fields.

Table 6-5. PMR Field Descriptions

Bits	Field	Description
31	BDMPDN	Debug power-down enable. Controls the clocking to the debug module. 0 Clock enabled. 1 Clock disabled.
30–27	—	Reserved, should be cleared.
26	ENETPDN	Ethernet power-down enable. Controls the clocking to the ethernet module. 0 Clock enabled. 1 Clock disabled.
25	PLIPDN	PLIC power-down enable. Controls the clocking to the PLIC module. 0 Clock enabled. 1 Clock disabled.
24	DRAMPDN	DRAM controller power-down enable. Controls the clocking to the DRAM controller module. 0 Clock enabled. 1 Clock disabled.
23	DMAPDN	DMA controller power-down enable. Controls the clocking to the DMA controller module. 0 Clock enabled. 1 Clock disabled.
22	PWMPDN	PWM power-down enable. Controls the clocking to the PWM module. 0 Clock enabled. 1 Clock disabled.
21	QSPIPDN	QSPI power-down enable. Controls the clocking to the QSPI module. 0 Clock enabled. 1 Clock disabled.
20	TIMERPDN	Timer power-down enable. Controls the clocking to the timer module. 0 Clock enabled. 1 Clock disabled.
19	GPIOPDN	Parallel port power-down enable. Controls the clocking to the parallel port module. 0 Clock enabled. 1 Clock disabled.
18	USBPDN	USB power-down enable. Controls the clocking to the USB module. Clocking to the USB module may be turned on by USD_D+ or $\overline{\text{INT1}}$/USB_WOR, at which time this bit is automatically cleared. 0 Clock enabled. 1 Clock disabled.
17	UART1PDN	UART1 power-down enable. Controls the clocking to the UART1 module. Clocking to the UART1 module may be restored when a change in signal level is detected on UART1RxD, at which time this bit is automatically cleared. 0 Clock enabled. 1 Clock disabled.
16	UART0PDN	UART0 power-down enable. Controls the clocking to the UART0 module. Clocking to the UART0 module may be restored when a change in signal level is detected on UART0RxD, at which time this bit is automatically cleared. 0 Clock enabled. 1 Clock disabled.
15-11	—	Reserved, should be cleared.

Table 6-5. PMR Field Descriptions (continued)

Bits	Field	Description
10	USBWK	USB wakeup enable. Allows clocking to the USB module to be restored when a change in signal level is detected on USD_D+ or $\overline{\text{INT1}}$/USB_WOR. See Table 6-6 for a description of the interaction between the PDN and WK bits. 0 Wakeup disabled. 1 Wakeup enabled. USBPDN must also be set.
9	UART1WK	UART1 wakeup enable. Allows clocking to the UART1 module to be restored when a change in signal level is detected on UART1RxD. See Table 6-6 for a description of the interaction between the PDN and WK bits. 0 Wakeup disabled. 1 Wakeup enabled. UART1PDN must also be set.
8	UART0WK	UART0 wakeup enable. Allows clocking to the UART0 module to be restored when a change in signal level is detected on UART0RxD. See Table 6-6 for a description of the interaction between the PDN and WK bits. 0 Wakeup disabled. 1 Wakeup enabled. UART0PDN must also be set.
7-6	—	Reserved, should be cleared.
5	MOS	Main oscillator stop. Allows the MCF5272 to be put into stop mode, in which internal clocking is stopped to the entire processor. To enter stop mode, the user must write to the ALPR and then execute a STOP instruction. See Section 6.2.6, “Activate Low-Power Register (ALPR).” It is not necessary to put any on-chip modules in power down mode. After setting this bit, a write access must be made to the ALPR register to actually enter stop mode. D[31:0] are driven low, and other bus signals are negated. Stop mode is exited when an interrupt is detected on one the external interrupt pins, $\overline{\text{INT}}$[6:1]. 0 Stop mode disabled. 1 Stop mode enabled.
4	SLPEN	Sleep enable. Allows the MCF5272 to be put into sleep mode in which internal clocking to the CPU is disabled.To enter sleep mode, the user must write to the ALPR and then execute a STOP instruction. See Section 6.2.6, “Activate Low-Power Register (ALPR).” Individual modules may have clocking disabled through the appropriate PDN bits. After SLPEN is set, a write access must be made to ALPR to actually enter sleep mode. D[31:0] are driven low, and other bus signals are negated. Sleep mode is exited when an interrupt is detected from an on-chip peripheral or one of the external interrupt pins, $\overline{\text{INT}}$[6:1]. 0 Sleep mode disabled. 1 Sleep mode enabled.
3-0	—	Reserved, should be cleared.

Table 6-6 details the interaction between the PDN and WK bits for the USB and USART modules.

Table 6-6. USB and USART Power Down Modes

PDN	WK	Description
0	X	Module powered up and operating normally.
1	0	Module in power down and can only be reactivated by clearing PDN.
1	1	Module in power down and can be reactivated by clearing PDN or detecting signal on the receive pins.

6.2.6 Activate Low-Power Register (ALPR)

ALPR, Figure 6-6, is used to put the MCF5272 into a low power mode (sleep or stop). A low-power mode is activated by a write access with any data to ALPR followed by a STOP instruction.

	15	0
Field	ALPHR	
Reset	0000_0000_0000_0000	
R/W	Write only	
Address	MBAR + 0x00E	

Figure 6-6. Activate Low-Power Register (ALPR)

The sequence to enter sleep mode is as follows:

1. Set power down and wakeup enable bits in the PMR as desired; set PMR[SLPEN].
2. Set the CPU interrupt priority level in the status register (SR). Interrupts below this level do not reactivate the CPU. Note that any interrupt will cause the processor to exit low-power mode, but only unmasked interrupts will cause the processor to resume operation.
3. Perform a write access with any data to ALPR.
4. Execute the STOP instruction. This must be the next instruction executed after the write to the ALPR.

Sleep mode is exited by an interrupt request from by either an external device or an on-chip peripheral as detailed in Table 6-7.

The sequence to enter stop mode is:

1. Set PMR[MOS]; clear PMR[SLPEN].
2. Set the CPU interrupt priority level in the status register (SR). Interrupts below this level do not reactivate the CPU.
3. Perform a write access with any data to ALPR.
4. Execute the STOP instruction. This must be the next instruction executed after the write to the ALPR.

Stop mode is exited by an interrupt request from an external device as detailed in Table 6-7.

Table 6-7. Exiting Sleep and Stop Modes

Interrupt Source	Exit Sleep	Exit Stop	USB Wake-on-Ring
Interrupts, $\overline{\text{INT6}}$–$\overline{\text{INT2}}$	Yes	Yes	No
Interrupt, $\overline{\text{INT1}}$	Yes	Yes	Yes
USART1, USART2	Yes, interrupt and Rx signal change	No	No
QSPI	Yes	No	No
USB	Yes, interrupt and Rx signal change	No	No
PLIC	Yes, interrupt	No	No
General purpose I/O	No	No	No

Table 6-7. Exiting Sleep and Stop Modes (continued)

Interrupt Source	Exit Sleep	Exit Stop	USB Wake-on-Ring
General purpose timers	Yes, interrupt	No	No
Ethernet	Yes, interrupt	No	No
DMA controller	Yes, interrupt	No	No
PWM	No	No	No
Hardware watchdog timer	No	No	No
Software watchdog timer	Yes, interrupt	No	No

6.2.7 Device Identification Register (DIR)

The DIR, Figure 6-7, contains a value representing the identification mark for the MCF5272 device. This register contains the same value as the JTAG IDCODE register. The version number field will change if a new revision of the MCF5272 is created.

	31–28	27–22	21–12	11–1	0
Field	Version Number	Design Center	Device Number	JEDEC ID	—
Value	0010 forK75N	0100_01	00_0000_0011	0000_0001_110	1
R/W	Read only				
Address	MBAR+0x010				

Figure 6-7. Device Identification Register (DIR)

Table 6-8 describes the DIR fields.

Table 6-8. DIR Field Descriptions

Bits	Description
31–28	Version number. Indicates the revision number of the MCF5272.
27–22	Design center. Indicates the ColdFire design center
21–12	Device number. Indicates an MCF5272
11–1	Indicates the reduced JEDEC ID for Freescale. Joint Electron Device Engineering Council (JEDEC) Publication 106-A and Chapter 11 of the IEEE Standard 1149.1 give more information on this field.

6.2.8 Software Watchdog Timer

The software watchdog timer prevents system lockup should the software become trapped in loops with no controlled exit. The software watchdog timer can be enabled or disabled through WRRR[EN]. If enabled, the watchdog timer requires the periodic execution of a software watchdog servicing sequence. If this periodic servicing action does not occur, the timer counts until it reaches the reset timeout value, resulting in a hardware reset with $\overline{\text{RSTO}}$ driven low for 16 clocks. SCR[RSTSRC] is updated to indicate that the software watchdog caused the reset.

If an interrupt timeout value is programmed in WIRR, and this value is reached prior to the reset timeout value, WER[WIE] is set and a maskable interrupt is issued at the level defined by ICR4[SWTOIPL].

The software watchdog consists of a 15-bit counter with a 15-bit prescaler. It counts up to a maximum of 32768, with a resolution of 32768 clock periods. Thus, at 66 MHz, the resolution of the watchdog is 0.5 msec, with a maximum timeout period of 32768 * 32768 = 2^{30} clock periods or 16.267 S.

Timeout = (WRRR +1) * 32768 clocks

6.2.8.1 Watchdog Reset Reference Register (WRRR)

The watchdog reset reference register (WRRR), Figure 6-8, contains the reference value for the software watchdog timeout causing a reset.

	15 … 1	0
Field	REF	EN
Reset	1111_1111_1111_1110	
R/W	R/W	
Address	MBAR + 0x280	

Figure 6-8. Watchdog Reset Reference Register (WRRR)

Table 6-9 describes WRRR fields.

Table 6-9. WRRR Field Descriptions

Bits	Field	Description
15–1	REF	Reference value. This field determines the reset timeout value.Reset initializes this register to 0xFFFE, disabling the watchdog timer and setting it to the maximum timeout value.
0	EN	Enable watchdog. When enabled, software should periodically write to WCR to avoid reaching the reset reference value. 0 Watchdog timer disabled. 1 Watchdog timer enabled.

6.2.8.2 Watchdog Interrupt Reference Register (WIRR)

The watchdog interrupt reference register (WIRR), Figure 6-9, contains the reference value for the software watchdog timeout causing an interrupt.

	15 … 1	0
Field	REF	IEN
Reset	1111_1111_1111_1110	
R/W	R/W	
Address	MBAR + 0x284	

Figure 6-9. Watchdog Interrupt Reference Register (WIRR)

Table 6-10 describes WIRR fields.

Table 6-10. WIRR Field Descriptions

Bits	Field	Description
15-1	REF	Reference value. Contains the reference value for the watchdog timeout causing an interrupt.
0	IEN	Enable interrupt. When enabled, software should periodically write to WCR to avoid reaching the interrupt reference value. 0 Disable interrupt. 1 Enable interrupt upon reaching interrupt reference value. If IEN is set when WER[WIE] = 1, an immediate interrupt occurs.

6.2.8.3 Watchdog Counter Register (WCR)

The WCR, Figure 6-10, contains the 16 most significant bits of the software watchdog counter. Writing any value to WCR resets the counter and prescaler and should be executed on a regular basis if the watchdog is enabled.

	15 … 0
Field	COUNT
Reset	0000_0000_0000_0000
R/W	R/W
Address	MBAR + 0x288

Figure 6-10. Watchdog Counter Register (WCR)

6.2.8.4 Watchdog Event Register (WER)

The WER, Figure 6-11, reports when the watchdog timer reaches the WIRR value.

	15 … 1	0
Field	—	WIE
Reset	0000_0000_0000_0000	
R/W	R/W	
Address	MBAR + 0x28C	

Figure 6-11. Watchdog Event Register (WER)

Table 6-11 describes WER fields.

Table 6-11. WER Field Descriptions

Bits	Field	Description
15–1	—	Reserved, should be cleared.
0	WIE	Watchdog interrupt event. 0 WIRR value has not been reached. 1 WIRR value has been reached. WIE is cleared by writing a 1 to it. The timer does not negate the interrupt request to the interrupt controller until WIE is cleared. WIE is set regardless of the state of WIRR[IEN]; however, an interrupt is not asserted to the controller unless WIRR[IEN] = 1.

Chapter 7
Interrupt Controller

This chapter describes the operation of the interrupt controller portion of the system integration module (SIM). It includes descriptions of the registers in the interrupt controller memory map and the interrupt priority scheme.

7.1 Overview

The SIM provides a centralized interrupt controller for all MCF5272 interrupt sources, which consist of the following:

- External interrupts $\overline{\text{INT}}$[6:1]
- Timer modules
- UART modules
- PLIC module
- USB module
- DMA module
- Ethernet module
- QSPI module
- Software watchdog timer (SWT)

Figure 7-1 is a block diagram of the interrupt controller.

The SIM provides the following registers for managing interrupts:

- Four interrupt control registers (ICR1–ICR4), which are used to assign interrupt levels to the interrupt sources.
- The interrupt source register (ISR) allows reading the instantaneous value of each interrupt source.
- The programmable interrupt transition register (PITR) specifies the triggering transition of the external interrupt inputs.
- The programmable interrupt wakeup register (PIWR) specifies which interrupt sources can reactivate the CPU from low-power sleep or stop mode.
- The programmable interrupt vector register (PIVR) specifies which vector number is returned in response to an interrupt acknowledge cycle.

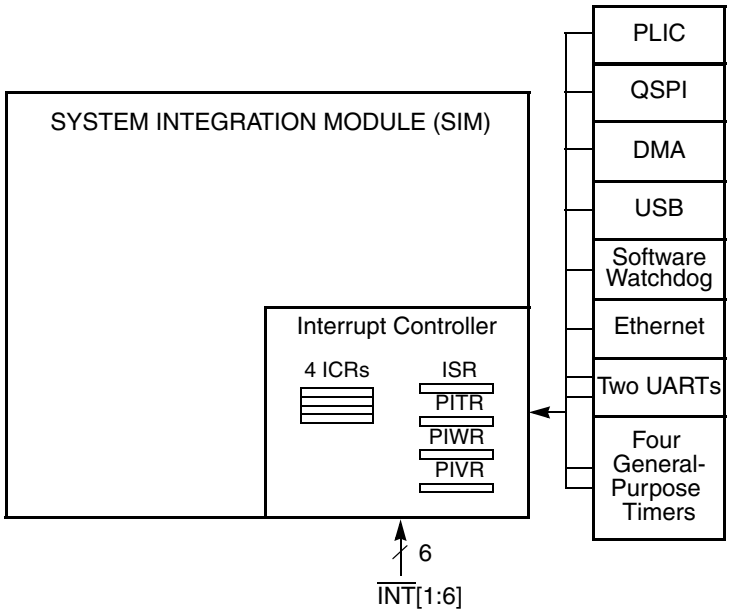

Figure 7-1. Interrupt Controller Block Diagram

7.2 Interrupt Controller Registers

The interrupt controller register portion of the SIM memory map is shown in Table 7-1.

Table 7-1. Interrupt Controller Registers

MBAR Offset	[31:24]	[23:16]	[15:8]	[7:0]
0x020	Interrupt control register 1 (ICR1) [p. 7-4]			
0x024	Interrupt control register 2 (ICR2) [p. 7-5]			
0x028	Interrupt control register 3 (ICR3) [p. 7-5]			
0x02C	Interrupt control register 4 (ICR4) [p. 7-5]			
0x030	Interrupt source register (ISR) [p. 7-6]			
0x034	Programmable interrupt transition register (PITR) [p. 7-8]			
0x038	Programmable interrupt wakeup register (PIWR) [p. 7-9]			
0x03C	Reserved			Programmable interrupt vector register (PIVR) [p. 7-9]

All external interrupt inputs are edge sensitive, with the active edge being programmable through PITR. An interrupt must remain asserted for at least three consecutive rising edges of CPU_ExtCLK to be considered valid. The priority level of each interrupt source is programmed through the ICRs.

The MCF5272 does not support auto-vectored interrupts. Interrupt service routines for all interrupts should have vectors in the user-defined interrupt region of the vector table (vectors 64–255). The location of these vectors is programmable through the PIVR. For more information on the servicing of interrupts, see

Chapter 2, “ColdFire Core.” Pending interrupts from external sources ($\overline{\text{INT}}$[6:1]) can be cleared using the ICRs.

For an interrupt to be successfully processed, stack RAM must be available. A programmable chip select is often used for the RAM, in which case, the RAM is not immediately available at startup. Thus, no interrupts are recognized until PIVR is initialized. The RAM chip select and system stack should be set up before this initialization.

If more than one interrupt source has the same interrupt priority level (IPL), the interrupt controller daisy chains the interrupts with the priority order following the bit placement in the PIWR, with $\overline{\text{INT1}}$ having the highest priority and SWTO having the lowest priority, as shown in Figure 7-8.

7.2.1 Interrupt Controller Registers

This section describes the registers associated with the interrupt controller. Table 7-2 gives the nomenclature used for the interrupt and power management registers.

Table 7-2. Interrupt and Power Management Register Mnemonics

Mnemonic or Portion Thereof	Description
INT1, INT2, INT3, INT4, INT5, INT6	External interrupt signals 1–6.
TMR0, TMR1, TMR2, TMR3	Timers 3–0 from timer module
USB0, USB1, USB2, USB3, USB4, USB5, USB6, USB7	USB endpoint 0–7
UART1, UART2	UART1, UART2 modules
PLIP	PLIC 2-KHz periodic interrupt, 2B+D data
PLIA	PLIC asynchronous and maintenance channels interrupt
DMA	DMA controller interrupt
ETx	Ethernet module transmit data interrupt
ERx	Ethernet module receive data interrupt
ENTC	Ethernet module non-time-critical interrupt
QSPI	Queued serial peripheral interface
IPL2, IPL1, IPL0	Interrupt priority level bits 2–0
PI	Pending interrupt
PDN	Power down enable
WK	Wakeup enable
SWTO	Software watchdog timer time out

7.2.2 Interrupt Control Registers (ICR1–ICR4)

ICR1–ICR4 are used to configure interrupts from various on- and off-chip sources. When read, the data is the last value written to the register with the exception of the PI bits, which are transitory functions. These registers can be accessed as 8-, 16-, or 32-bit registers. An 8- or 16-bit write leaves the remaining bits intact. To avoid altering other IPL fields when resetting interrupts generated by INT[6:1], read the required byte, word, or longword from the appropriate ICR, AND.B/W/L its value with a mask whose IPL bits are all 1 and whose PI bits are 1 for those sources whose PI bit is to be reset and 0 for those sources whose PI bit is to be left unchanged.

7.2.2.1 Interrupt Control Register 1 (ICR1)

ICR1, Figure 7-2, is used to configure interrupts from various on- and off-chip sources.

	31	30–28	27	26–24	23	22–20	19	18–16
Field	INT1PI	INT1IPL	INT2PI	INT2IPL	INT3PI	INT3IPL	INT4PI	INT4IPL
Reset	0000_0000_0000_0000							

	15	14–12	11	10–8	7	6–4	3	2–0
Field	TMR0PI	TMR0IPL	TMR1PI	TMR1IPL	TMR2PI	TMR2IPL	TMR3PI	TMR3IPL
Reset	0000_0000_0000_0000							
R/W	R/W							
Addr	MBAR + 0x020							

Figure 7-2. Interrupt Control Register 1 (ICR1)

Table 7-3 describes ICR1 fields.

Table 7-3. ICR Field Descriptions

Bits	Name	Description
31, 27, 23, 19, 15, 11, 7, 3	PI	Pending interrupt. Writing a 1 enables the value for the corresponding IPL field to be set. Note: for external interrupts only, writing a one to this bit clears the corresponding interrupt latch. The external interrupt must be toggled before another interrupt is latched. For all on-chip interrupt sources, this bit is cleared when the interrupt is cleared in the module registers. 0 No interrupt pending 1 An interrupt is pending.
30–28, 26–24, 22–20, 18–16, 14-12, 10–8, 6–4, 2–0	IPL	Interrupt priority level. Specifies the IPL for the corresponding interrupt source. This field can be changed only when a 1 is simultaneously written to the corresponding PI bit. 000 The corresponding $\overline{\text{INT}}$ source is inhibited and cannot generate interrupts. The state of the signal can still be read in the ISR. 001–111 The corresponding $\overline{\text{INT}}$ source is enabled and generates an interrupt with the indicated priority level.

7.2.2.2 Interrupt Control Register 2 (ICR2)

ICR2, Figure 7-3, is used to configure interrupts from various on-chip sources.

	31	30 28	27	26 24	23	22 20	19	18 16
Field	UART1PI	UART11IPL	UART2PI	UART2IPL	PLIPPI	PLIPIPL	PLIAPI	PLIAIPL
Reset	0000_0000_0000_0000							

	15	14 12	11	10 8	7	6 4	3	2 0
Field	USB0PI	USB0IPL	USB1PI	USB1IPL	USB2PI	USB2IPL	USB3PI	USB3IPL
Reset	0000_0000_0000_0000							
R/W	R/W							
Addr	MBAR + 0x024							

Figure 7-3. Interrupt Control Register 2 (ICR2)

Table 7-3 describes ICR2 fields.

7.2.2.3 Interrupt Control Register 3 (ICR3)

ICR3, Figure 7-4, is used to configure interrupts from various on-chip sources.

	31	30 28	27	26 24	23	22 20	19	18 16
Field	USB4PI	USB41IPL	USB5PI	USB5IPL	USB6PI	USB6IPL	USB7PI	USB7IPL
Reset	0000_0000_0000_0000							

	15	14 12	11	10 8	7	6 4	3	2 0
Field	DMAPI	DMAIPL	ERXPI	ERXIPL	ETXPI	ETXIPL	ENTCPI	ENTCIPL
Reset	0000_0000_0000_0000							
R/W	R/W							
Addr	MBAR + 0x028							

Figure 7-4. Interrupt Control Register 3 (ICR3)

Table 7-3 describes ICR3 fields.

7.2.2.4 Interrupt Control Register 4 (ICR4)

ICR4, Figure 7-5, is used to configure interrupts from various on-chip sources.

	31	30 28	27	26 24	23	22 20	19	18 16
Field	QSPIPI	QSPIIPL	INT5PI	INT5IPL	INT6PI	INT6IPL	SWTOPI	SWTOIPL
Reset	0000_0000_0000_0000							

	15	0
Field	—	
Reset	0000_0000_0000_0000	
R/W	R/W	
Addr	MBAR + 0x02C	

Figure 7-5. Interrupt Control Register 4(ICR4)

Table 7-3 describes ICR4 fields.

7.2.3 Interrupt Source Register (ISR)

The interrupt source register (ISR), Figure 7-6, is used to read the instantaneous value of all interrupt sources, both internal and external. Note that the register bits give the value of the interrupt source prior to input synchronization or polarity correction.

	31	30	29	28	27	26	25	24
Field	INT1	INT2	INT3	INT4	TMR0	TMR1	TMR2	TMR3
Reset	XXXX_1111							
R/W	Read only							

	23	22	21	20	19	18	17	16
Field	UART1	UART2	PLI_P	PLI_A	USB0	USB1	USB2	USB3
Reset	1111_1111							
R/W	Read only							

	15	14	13	12	11	10	9	8
Field	USB4	USB5	USB6	USB7	DMA	ERx	ETx	ENTC
Reset	1111_1111							
R/W	Read only							

	7	6	5	4	3	0
Field	QSPI	INT5	INT6	SWTO	—	
Reset	1XX1_0000					
R/W	Read only					
Address	MBAR+0x030					

Figure 7-6. Interrupt Source Register (ISR)

Table 7-4 describes ISR fields.

Table 7-4. ISR Field Descriptions

Bits	Field	Description
31–4	—	0 Interrupt source is high. 1 Interrupt source is low.
3–0	—	Reserved, should be cleared.

7.2.4 Programmable Interrupt Transition Register (PITR)

The programmable interrupt transition register (PITR), Figure 7-7, specifies the triggering (either high-to-low or low-to-high) on each of the external interrupt inputs.

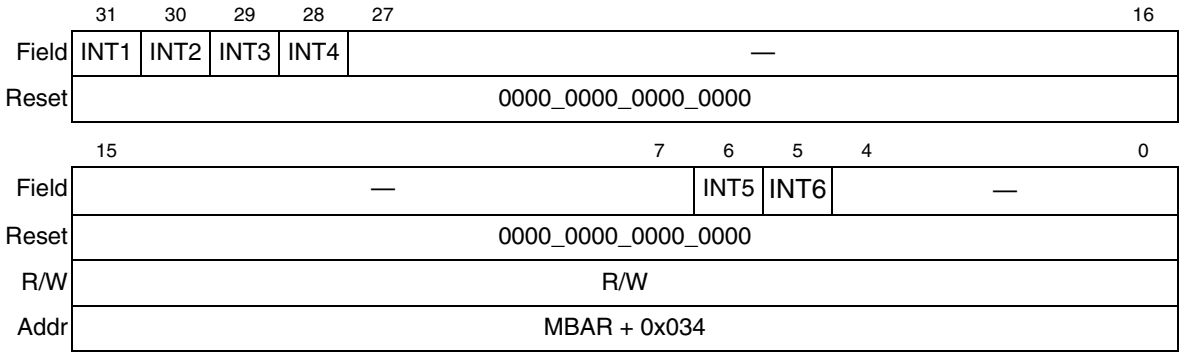

Figure 7-7. Programmable Interrupt Transition Register (PITR)

Table 7-5 describes PITR fields.

Table 7-5. PITR Field Descriptions

Bits	Name	Description
31–28, 6, 5	—	0 Triggering edge of external interrupt input is high-to-low (negative edge triggered). 1 Triggering edge of external interrupt input is low -to-high (positive edge triggered).
27–7, 4–0	—	Reserved, should be cleared.

7.2.5 Programmable Interrupt Wakeup Register (PIWR)

The programmable interrupt wakeup register (PIWR), Figure 7-8, is used to specify which interrupt sources are capable of causing the CPU to wake up from low-power SLEEP or STOP modes when their source is active. All sources are disabled on reset. Note that only the external interrupt pins $\overline{\text{INT}}$[6:1] can wake up the CPU from STOP mode.

If more than one interrupt source has the same interrupt priority level (IPL) programmed in the ICRs, the interrupt controller daisy chains the interrupts with the priority order following the bit placement in the PIWR, with $\overline{\text{INT1}}$ having the highest priority and SWTO having the lowest priority as shown in Figure 7-8.

	31	30	29	28	27	26	25	24
Field	INT1	INT2	INT3	INT4	TMR0	TMR1	TMR2	TMR3
Reset	1111_1111							
R/W	R/W							

	23	22	21	20	19	18	17	16
Field	UART1	UART2	PLI_P	PLI_A	USB0	USB1	USB2	USB3
Reset	1111_1111							
R/W	R/W							

	15	14	13	12	11	10	9	8
Field	USB4	USB5	USB6	USB7	DMA	ERx	ETx	ENTC
Reset	1111_1111							
R/W	R/W							

	7	6	5	4	3	0
Field	QSPI	INT5	INT6	SWTO	—	
Reset	1111_0000					
R/W	R/W					
Address	MBAR+0x038					

Figure 7-8. Programmable Interrupt Wakeup Register (PIWR)

Table 7-6 describes PIWR fields.

Table 7-6. PIWR Field Descriptions

Bits	Field	Description
31–4	—	0 Interrupt cannot wake up the CPU when interrupt source is active. 1 Interrupt wakes up the CPU from low-power modes.
3–0	—	Reserved, should be cleared.

7.2.6 Programmable Interrupt Vector Register (PIVR)

The programmable interrupt vector register (PIVR), Figure 7-9, specifies the vector numbers the interrupt controller returns in response to interrupt acknowledge cycles for the various peripherals and discrete interrupt sources.

Pending interrupts are presented to the processor core in order of priority from highest to lowest. The core responds to an interrupt request by initiating an interrupt acknowledge cycle to receive a vector number, which allows the core to locate the interrupt's service routine. The interrupt controller is able to identify the source of the highest priority interrupt that is being acknowledged and provide the interrupt vector to the core. The three most significant bits of the interrupt vector are programmed by the user in the PIVR. The lower five bits are provided by the interrupt controller, depending on the source, as shown in Table 7-7.

If the core initiates an interrupt acknowledge cycle prior to the PIVR being programmed, the interrupt controller returns the uninitialized interrupt vector (0x0F). If the core initiates an interrupt acknowledge cycle after the PIVR has been initialized, but there is no interrupt pending, the interrupt controller returns the user a spurious interrupt vector (0x*xxx*0_0000). Because the interrupt controller responds to all interrupt acknowledges, a bus error situation cannot occur during an interrupt-acknowledge cycle.

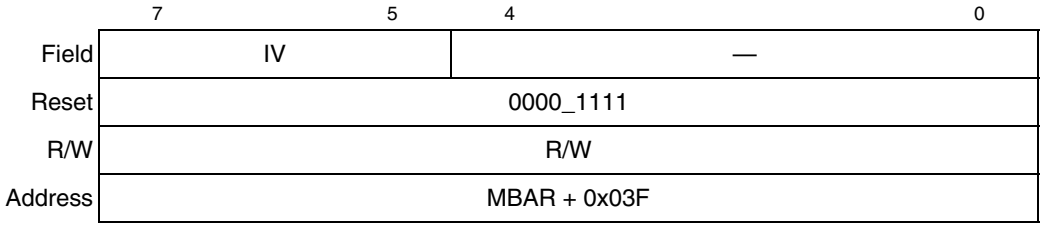

Figure 7-9. Programmable Interrupt Vector Register (PIVR)

Table 7-7 describes PIVR fields.

Table 7-7. PIVR Field Descriptions

Bits	Field	Description
7-5	IV	These bits provide the high three bits of the interrupt vector for interrupt acknowledge cycles from all sources. To conform to the core interrupt vector allocation, these bits should be set equal to or greater than 010. See Table 2-3.
4-0	—	Reserved, should be cleared.

Table 7-8 lists the values for the five least significant bits of the interrupt vector. The vector numbers shown assume PIVR[IV]=0b010. If another value of PIVR[IV] is used, the vector numbers would change accordingly.

Table 7-8. MCF5272 Interrupt Vector Table

Vector Number	Bits 4–0	Source	Function
64	00000	Reserved	User Spurious Interrupt
65	00001	INT1	External Interrupt Input 1
66	00010	INT2	External Interrupt Input 2
67	00011	INT3	External Interrupt Input 3
68	00100	INT4	External Interrupt Input 4
69	00101	TMR0	Timer 0
70	00110	TMR1	Timer 1
71	00111	TMR2	Timer 2
72	01000	TMR3	Timer 3
73	01001	UART1	UART 1
74	01010	UART2	UART 2
75	01011	PLIP	PLIC 2KHz Periodic
76	01100	PLIA	PLIC Asynchronous
77	01101	USB0	USB Endpoint 0
78	01110	USB1	USB Endpoint 1
79	01111	USB2	USB Endpoint 2
80	10000	USB3	USB Endpoint 3
81	10001	USB4	USB Endpoint 4
82	10010	USB5	USB Endpoint 5
83	10011	USB6	USB Endpoint 6
84	10100	USB7	USB Endpoint 7
85	10101	DMA	DMA Controller
86	10110	ERx	Ethernet Receiver
87	10111	ETx	Ethernet Transmitter
88	11000	ENTC	Ethernet Module Non-time-critical
89	11001	QSPI	Queued Serial Peripheral Interface
90	11010	INT5	External Interrupt Input 5
91	11011	INT6	External Interrupt Input 6
92	11100	SWTO	Software Watchdog Timer Timeout
93	11101	Reserved	Reserved
94	11110	Reserved	Reserved
95	11111	Reserved	Reserved

Chapter 8
Chip Select Module

This chapter describes the chip select module, including the chip select registers, the configuration and behavior of the chip select signals, and the global chip select functions.

8.1 Overview

The chip select module provides user-programmable control of the eight chip select and four byte strobe outputs. This subsection describes the operation and programming model of the chip select registers, including the chip select base and option registers.

8.1.1 Features

The following list summarizes the key chip select features:

- Eight dedicated programmable chip selects
- Address masking for memory block sizes from 4 Kbytes to 2 Gbytes
- Programmable wait states and port sizes
- Programmable address setup
- Programmable address hold for read and write
- SDRAM controller interface supported with $\overline{\text{CS7}}/\overline{\text{SDCS}}$
- Global chip select functionality

8.1.2 Chip Select Usage

Each of the eight chip selects, $\overline{\text{CS0}}$–$\overline{\text{CS7}}$, is configurable for external SRAM, ROM, and peripherals. $\overline{\text{CS0}}$ is used to access external boot ROM and is enabled after a reset. The data bus width of the external ROM must be configured at reset by having appropriate pull-down resistors on QSPI_CLK/BUSW1 and QSPI_CS0/BUSW0. At reset these two signals replace the bus width field in the chip select 0 base register (CSBR0[BW]).

$\overline{\text{CS7}}$ must be used for enabling an external SDRAM array. In this mode, it is referred to as $\overline{\text{SDCS}}$.

NOTE

A detailed description of each bus access type supported by the MCF5272 device is given in Chapter 20, “Bus Operation.”

8.1.3 Boot $\overline{CS0}$ Operation

$\overline{CS0}$ is enabled after reset and is used to access boot ROM. The memory port width of $\overline{CS0}$ is defined by the state of QSPI_CLK/BUSW1 and QSPI_CS0/BUSW0. These two bits should be configured to define the width of the boot ROM connected to $\overline{CS0}$, as described in Section 19.18, "Operating Mode Configuration Pins."

8.2 Chip Select Registers

Each chip select is controlled through two 32-bit registers. The chip select base registers (CSBR0–CSBR7) are used to enable the chip select and to configure the base address, port size, bus interface type, and address space. The chip select option registers (CSOR0–CSOR7) are used to configure the address mask, additional setup/hold, extended burst capability, wait states, and read/write access.

Table 8-1. CSCR and CSOR Values after Reset

Offset	Name	Chip Select Register	Reset
+ 0x040	CSBR0	CS base register 0	0x0000_0x01[1]
+ 0x044	CSOR0	CS option register 0	0xFFFF_F078
+ 0x048	CSBR1	CS base register 1	0x0000_1300
+ 0x04C	CSOR1	CS option register 1	0xFFFF_F078
+ 0x050	CSBR2	CS base register 2	0x0000_2300
+ 0x054	CSOR2	CS option register 2	0xFFFF_F078
+ 0x058	CSBR3	CS base register 3	0x0000_3300
+ 0x05C	CSOR3	CS option register 3	0xFFFF_F078
+ 0x060	CSBR4	CS base register 4	0x0000_4300
+ 0x064	CSOR4	CS option register 4	0xFFFF_F078
+ 0x068	CSBR5	CS base register 5	0x0000_5300
+ 0x06C	CSOR5	CS option register 5	0xFFFF_F078
+ 0x070	CSBR6	CS base register 6	0x0000_6300
+ 0x074	CSOR6	CS option register 6	0xFFFF_F078
+ 0x078	CSBR7	CS base register 7	0x0000_7700
+ 0x07C	CSOR7	CS option register 7	0xFFFF_F078

[1] The nibble shown as *x* resets as 00*xx*, where the undefined bits represent the BW field. QSPI_CS0/BUSW0 and QSPI_CLK/BUSW1 program the bus width for $\overline{CS0}$ at reset

8.2.1 Chip Select Base Registers (CSBR0–CSBR7)

The CSBRs, Figure 8-1, provide a model internal bus cycle against which to match actual bus cycles to determine whether a specific chip select should assert. A bus cycle in a specific chip select register causes the assertion of the corresponding external chip select.

	31 12	11 10	9 8	7	6 5	4 2	1	0
Field	BA	EBI	BW	SUPER	TT	TM	CTM	ENABLE
Reset	CSBR0: 0x0000_0x01[1]; CSBR1: 0x0000_1300; CSBR2: 0x0000_2300; CSBR3: 0x0000_3300; CSBR4: 0x0000_4300; CSBR5: 0x0000_5300; CSBR6: 0x0000_6300; CSBR7: 0x0000_7700							
R/W	R/W							
Addr	0x040 (CSBR0); 0x048 (CSBR1); 0x050 (CSBR2); 0x058 (CSBR3); 0x060 (CSBR4); 0x068 (CSBR5); 0x070 (CSBR6); 0x078 (CSBR7)							

Figure 8-1. Chip Select Base Registers (CSBR*n*)

Table 8-2 describes CSBR*n* fields.

Table 8-2. CSBR*n* Field Descriptions

Bits	Name	Description
31–12	BA	Base address. The starting address of the memory space covered by the chip select. BA is compared with bits 31–12 of the access to determine whether the current bus cycle is intended for this chip select. Any combination of BA bits can be masked in the associated CSOR.
11–10	EBI	External bus interface modes. These modes are used to multiplex outputs and determine timing of the appropriate bus interface module onto the device pins. 00 16-/32-bit SRAM/ROM. For 16-/32-bit wide memory devices with byte strobe inputs. CSBR0[EBI] = 00 at reset. Affects all chip selects. 01 SDRAM. One physical bank of SDRAM consisting of 16–256 Mbit devices. CSOR7[WS] must be set to 0x1F. Affects only $\overline{CS7}$/$\overline{SDCS}$. 10 Reserved 11 Use SRAM/ROM timing for 8-bit devices without byte strobe inputs.
9–8	BW	Bus width. Determines data bus size of the memory-mapped resource for all chip selects except $\overline{CS0}$. It is assumed that boot code for the processor is accessed through the global chip select $\overline{CS0}$, so the initial bus width for this chip select must be configured at reset. QSPI_CS0/BUSW0 and QSPI_CLK/BUSW1 are used to program the bus width for $\overline{CS0}$ at reset. 00 Longword (32 bits) 01 Byte (8 bits) 10 Word (16 bits) 11 Cache line (32 bits)
7	SUPER	Supervisor mode. 0 Bus cycle may be in user or supervisor mode (neglecting conditions imposed by setting CTM). 1 The chip select asserts a match only if the transfer modifier indicates a supervisor mode access. A user access matching BA causes an access error. SUPER, CTM, TT, and TM are used to restrict bus access. For example, if TT and TM indicate a user data access and SUPER and CTM are both set, no accesses can occur.
6–5	TT	Transfer type. TT and TM may be used to further qualify the address match. If CTM is set, TT and TM must match the access types for the chip select to assert. See the description of TM.

Table 8-2. CSBR*n* Field Descriptions (continued)

Bits	Name	Description
4–2	TM	Transfer modifier. Operates with TT to determine the access type. TT TM Function 0x 000 Reserved 0x 001 User data access 0x 010 User instruction access 0x 011–100 Reserved 0x 101 Supervisor data access 0x 110 Supervisor instruction access 0x 111 Reserved 10 000–100 Reserved 10 101 Emulator mode data access 10 110 Emulator mode instruction access 10 111 Reserved 11 000 CPU space access 11 001 Interrupt acknowledge level 1 11 010 Interrupt acknowledge level 2 11 011 Interrupt acknowledge level 3 11 100 Interrupt acknowledge level 4 11 101 Interrupt acknowledge level 5 11 110 Interrupt acknowledge level 6 11 111 Interrupt acknowledge level 7
1	CTM	Compare TM. Enables comparison between the access type and the TM and TT bits. 0 TT and TM register bits do not affect address match. 1 TT and TM register bits must match the access type for an address match to occur.
0	ENABLE	Enable. Disables/enables the chip select. When disabled, the chip select is never asserted, regardless of the address on the internal bus. ENABLE is 0 at reset, except $\overline{CS0}$ which is 1. 0 Chip select is disabled, no matches can occur and chip select output cannot assert. 1 Chip select is enabled, bus cycles are compared against register contents.

Table 8-3 describes the interaction between CSBR*n*[EBI], $\overline{OE}$/RD, R/$\overline{W}$, and $\overline{SDWE}$.

Table 8-3. Output Read/Write Strobe Levels versus Chip Select EBI Code

EBI	EBI Function	Access Type	$\overline{OE}$/RD	R/W	SDWE
00	SRAM, ROM	Write	High	Low	High
		Read	Low	High	High
01	SDRAM	Write	High	High	Low
		Read	High	High	High
11	SRAM, ROM	Write	High	Low	High
		Read	Low	High	High

NOTE

The MCF5272 compares the address for the current bus transfer with the address and mask bits in the CSBRs and CSORs looking for a match. The priority is listed in Table 8-4 (from highest priority to lowest priority):

Table 8-4. Chip Select Memory Address Decoding Priority

Priority	Chip Select
Highest	Chip select 0
	Chip select 1
	Chip select 2
	Chip select 3
	Chip select 4
	Chip select 5
	Chip select 6
Lowest	Chip select 7

8.2.2 Chip Select Option Registers (CSOR0–CSOR7)

CSOR0–CSOR7, Figure 8-2, are used to configure the address mask, additional setup/hold, extended burst capability, wait states, and read/write access.

	31–12	11	10	9	8	7	6–2	1	0
Field	BAM	ASET	WRAH	RDAH	EXTBURST	—	WS	RW	MRW
Reset	0xFFFF_F078								
R/W	R/W								
Addr	0x044 (CSOR0); 0x04C (CSOR1); 0x054 (CSOR2); 0x05C (CSOR3); 0x064 (CSOR4); 0x06C (CSOR5); 0x074 (CSOR6); 0x07C (CSOR7)								

Figure 8-2. Chip Select Option Registers (CSOR*n*)

Table 8-5 describes CSOR*n* fields.

Table 8-5. CSOR*n* Field Descriptions

Name	Name	Description
31–12	BAM	Address mask. Masks equivalent CSOR[BA] bits. The BAM setting chooses which BA bits to compare with the corresponding address bit to determine a match. 0 Mask address bit 1 Compare address bit
11	ASET	Address setup enable. Controls assertion of chip select with respect to assertion of a valid address that hits in the chip select address space. 0 Assert chip select on the rising edge of CLK that address is asserted. 1 Delay assertion of chip select for one CLK cycle after address is asserted. During write transfers, both chip select and R/$\overline{W}$ are delayed by 1 clock cycle. R/$\overline{W}$ asserts 1 clock cycle after assertion of the chip select.
10	WRAH	Controls the address, data, and attribute hold time after the termination, internal or external with $\overline{TA}$, of a write cycle that hits in the chip select address space. 0 Do not hold address, data, and attribute signals an extra cycle after chip select and R/$\overline{W}$ negate on writes. 1 Hold address, data, and attribute signals an extra cycle after $\overline{CS}x$ and R/$\overline{W}$ negate on writes.

Table 8-5. CSOR*n* Field Descriptions (continued)

Name	Name	Description
9	RDAH	Controls the address and attribute hold time after the termination, internal or external with $\overline{TA}$, of a read cycle that hits in the chip select address space. 0 Do not hold address and attribute signals an extra cycle after chip select negates on reads. 1 Hold address and attribute signals an extra cycle after chip select negate on reads.
8	EXTBURST	Enable extended burst. Valid only for $\overline{CS7}$. Reserved bit for $\overline{CS}$[0:5]. EXTBURST should be 1 when external SDRAM is configured for a data bus narrower than the width programmed for the MCF5272. EBI must be set for SDRAM and the BW must be set to the data bus width of the external SDRAM array. Example: If the MCF5272 external physical data bus width is 32 or 16 bits but the external SDRAM is 16 bits wide, EXTBURST must be set and BW must be 10 (word) for $\overline{SDCS}$. 0 Extended bursts are not enabled. 1 Extended bursts are enabled.
7	—	Reserved, should be cleared.
6–2	WS	Wait state generator. Specifies the number of wait states (in system clocks) needed before the SIM generates an internal transfer acknowledge signal to terminate the access. 0x00 No wait states 0x01 1 wait state ... 0x1E 30 wait states 0x1F External access For example, WS = 0x0A introduces a 10-clock wait before the bus cycle terminates; 0x1F indicates a source external to the chip select module terminates the access. For SRAM and ROM accesses EBI codes 00 or 11 and WS = 0x1F, $\overline{TA}$ must be driven from an external source to terminate the bus cycle, otherwise the on-chip bus timeout monitor issues a bus error exception. For SRAM and ROM accesses with EBI = 00 or 11 and WS = 0x00–0x1E, the chip select module terminates the bus cycle after the programmed number of system clocks. For SDRAM accesses with $\overline{SDCS}$, EBI = 01, and WS = 0x1F, bus cycles are terminated under control of the SDRAM controller. The CSOR0[WS] reset default is 0x1E. The default for all other CSORs is 0x00. Caution: Never drive $\overline{TA}$ as an input to terminate SDRAM peripheral accesses.
1	RW	RW and MRW determine whether the selected memory region is read only or write only. 0 Read only 1 Write only
0	MRW	MRW must be set for value of RW be taken into consideration. 0 Memory covered by chip select is read/write. The memory covered by the chip select is neither read nor write protected. 1 RW determines whether memory covered by chip select is read only or write only. A conflict causes either a read or write protect violation.

Chapter 9
SDRAM Controller

This chapter describes configuration and operation of the synchronous DRAM controller component of the SIM including a general description of signals involved in SDRAM operations. It provides interface information for memory configurations using most common SDRAM devices for both 16- and 32-bit wide data buses. The chapter concludes with signal timing diagrams.

9.1 Overview

The MCF5272 incorporates an SDRAM controller, whose main features are as follows:

- Glueless interface to a variety of JEDEC-compliant SDRAM devices.
- MCF5272 data bus width of 16 or 32 bits to SDRAM memory array
- 16- to 256-Mbit device support
- Dedicated bank address pins to provide pin out compatibility for different SDRAM sizes with a single printed circuit board layout
- Page size from 256–1024 column address locations
- 6-1-1-1 timing for burst-read; 3-1-1-1 timing for burst-write accesses (assuming a page hit at 66 MHz)
- CAS latencies of 1 and 2
- Up to four concurrently activated banks
- SDRAM power down and self refresh
- Refresh timer prescaler supports system clock down to 5 MHz maintaining a 15.6-µS refresh cycle
- Auto initialization of SDRAM

9.2 SDRAM Controller Signals

The SDRAM controller provides all required signals for glueless interfacing to a variety of JEDEC-compliant SDRAM devices. RAS/CAS address multiplexing and the SDRAM pin A10 auto-precharge function is software configurable for different page sizes. To maintain refresh capability without conflicting with concurrent accesses on the address and data buses, $\overline{\text{RAS0}}$, $\overline{\text{CAS0}}$, $\overline{\text{SDWE}}$, SDBA[0:1], SDCLKE, A10_PRECHG, and the SDRAM bank selects are dedicated SDRAM signals.

Figure 9-1 shows the SDRAM controller signal configuration.

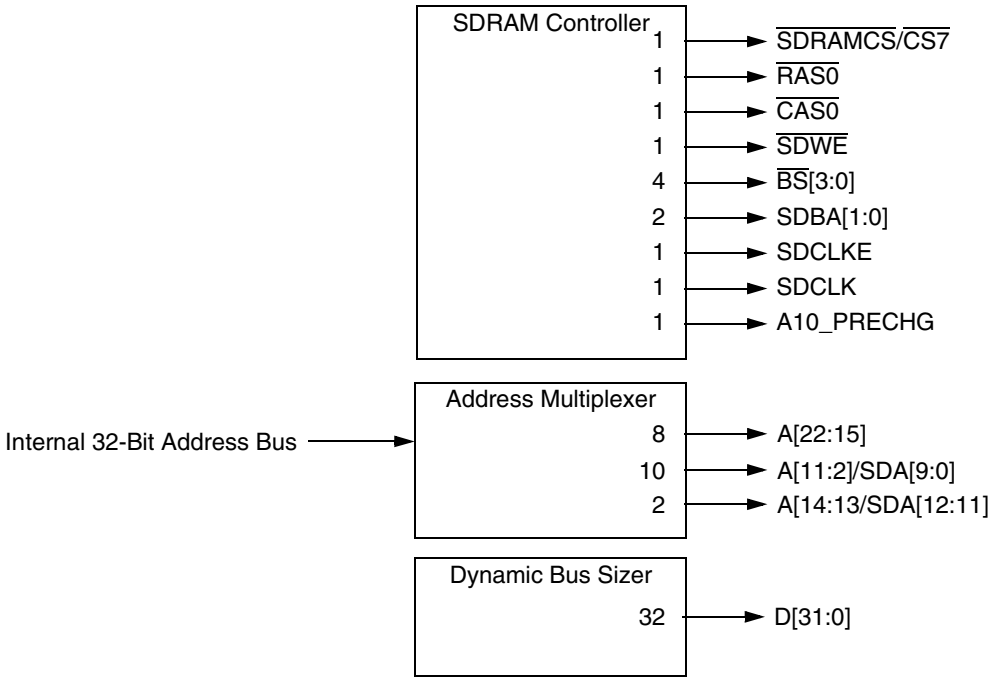

Figure 9-1. SDRAM Controller Signals

Table 9-1 describes SDRAM controller signals.

Table 9-1. SDRAM Controller Signal Descriptions

Signal	Description
A10_PRECHG	A10 precharge strobe. A precharge cycle occurs only after a page miss. During precharge, the SDRAM writes the designated on-chip RAM page buffer back into the SDRAM array. Precharge latency is set in SDTR[RP]. The reset value is 2 cycles, RP = 01.
$\overline{\text{BS}}$[3:0]	For SDRAM devices, these outputs should be connected to individual DQM signals. During SDRAM accesses, these signals indicate a byte transfer between SDRAM and the MCF5272 when asserted. Note that most SDRAMs associate DQM3 with the MSB, in which case $\overline{\text{BS3}}$ should be connected to the SDRAM's DQM3 input, and so forth.
CAS0	SDRAM column address strobe output
$\overline{\text{DRESETEN}}$	$\overline{\text{DRESETEN}}$ is asserted to indicate that the SDRAM controller is to be reset whenever $\overline{\text{RSTI}}$ asserts. If $\overline{\text{DRESETEN}}$ is negated, $\overline{\text{RSTI}}$ does not affect the SDRAM controller, which continues to refresh external memory. This is useful for debug situations where a reset of the device is required without losing data located in SDRAM. $\overline{\text{DRESETEN}}$ is normally tied high or low depending on system requirements. It should never be tied to $\overline{\text{RSTI}}$ or $\overline{\text{RSTO}}$.
RAS0	SDRAM row address strobe output
SDA[13:0]/ A[22:0]	Fourteen address signals are multiplexed to form SDRAM_ADR[13:0], which are used for connecting to SDRAM devices as large as 256 Mbits. SDRAM can be configured for 16- or 32-bit wide interface to the MCF5272 data bus. For an SDRAM array with a 32-bit data bus, SDRAM address signals are multiplexed starting with A2. For a 16-bit data bus, address signals are multiplexed starting with A1.
SDBA[1:0]	SDRAM controller bank address select outputs. Assigned to internal high-order address signals by programming SDCR[BALOC]. This allows using SDRAM devices of different sizes without changing the board layout. See Table 9-7.

Table 9-1. SDRAM Controller Signal Descriptions (continued)

Signal	Description
SDCLK	SDRAM (bus) clock (same frequency as CPU clock). This dedicated output reduces setup and hold time uncertainty due to process and temperature variations. SDCLK is disabled for SDRAM power-down mode.
SDCLKE	SDRAM clock enable
$\overline{\text{SDRAMCS}}$/$\overline{\text{CS7}}$	SDRAM chip select/$\overline{\text{CS7}}$. The SDRAM is assigned to $\overline{\text{CS7}}$ ($\overline{\text{SDRAMCS}}$) of the device chip select module.
SDWE	SDRAM write enable

Figure 9-2 is the pinout of a 16-bit SDRAM in a 54-pin TSOP (thin, small-outline package) package. Size can vary from 16–256 Mbits.

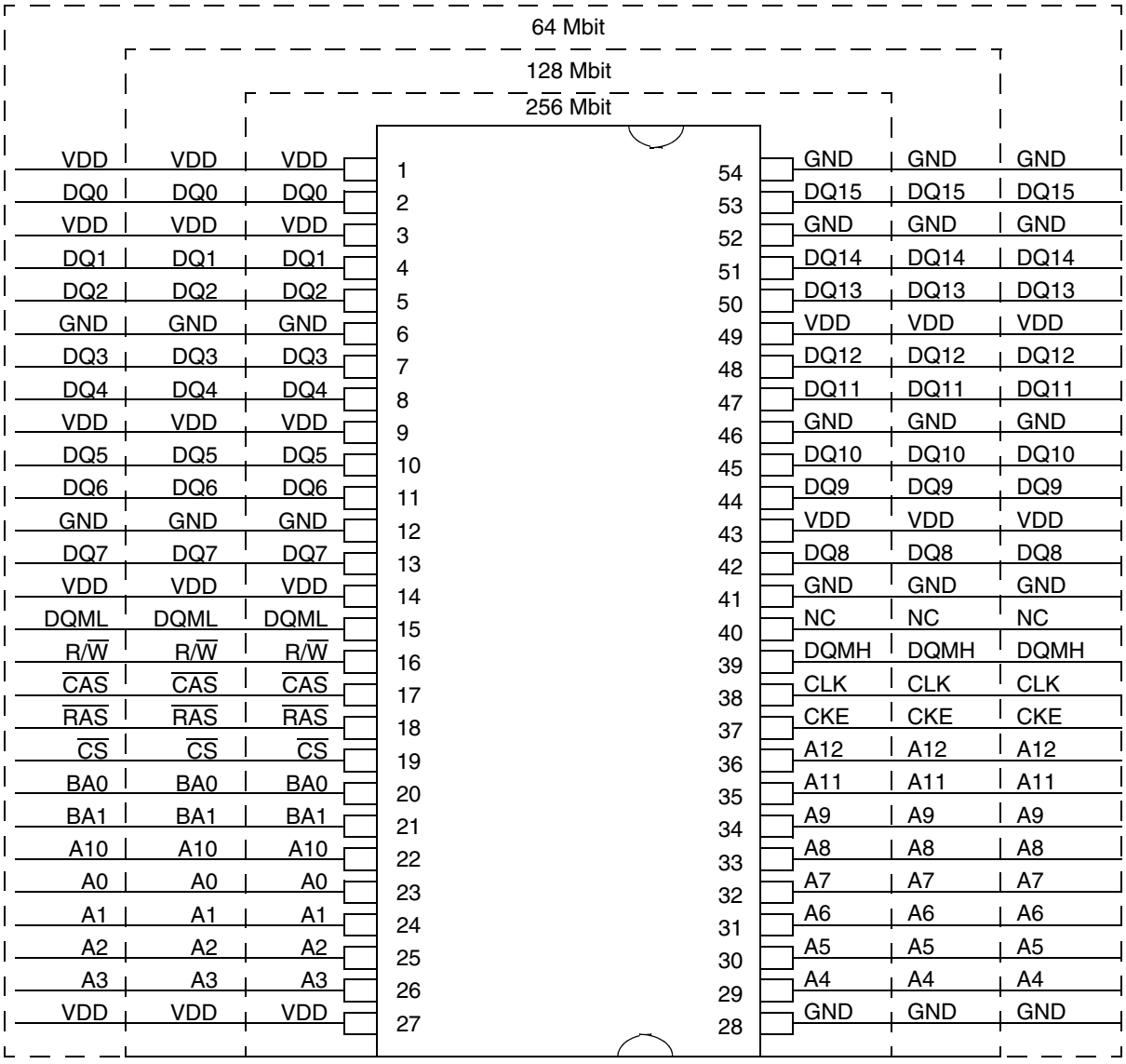

Figure 9-2. 54-Pin TSOP SDRAM Pin Definition

Table 9-2 shows how $\overline{BS}$[3:0] should be connected to DQM*x* for 16- and 32-bit SDRAM configurations.

Table 9-2. Connecting $\overline{BS}$[3:0] to DQM*x*

5272		SDRAM			Data Signals
16 Bit	32 Bit	16 Bit	32 Bit (2 x 16)	32 Bit (1 x 32)	
BS3	BS3	DQMH	DQMH	DQM3	D[31:24]
BS2	BS2	DQML	DQML	DQM2	D[23:16]
NC	BS1	NC	DQMH	DQM1	D[15:8]
NC	BS0	NC	DQML	DQM0	D[7:0]

9.3 Interface to SDRAM Devices

The following tables describes possible memory configurations using most common SDRAM devices for 16- and 32-bit wide data buses.

Table 9-3. Configurations for 16-Bit Data Bus

Parameter	8-Bit		16-Bit			
	16 Mbits	64 Mbits	16 Mbits	64 Mbits	128 Mbits	256 Mbits
Number of devices	2		1			
Total size	4 Mbytes	16 Mbytes	2 Mbytes	8 Mbytes	16 Mbytes	32 Mbytes
Total page size	1 Kbyte	1 Kbyte	512 Kbytes	512 Kbytes	1 Kbyte	1 Kbyte
Number of banks	2	4	2	4	4	4
Refresh count in 64 mS	4K	4K	4K	4K	4K	8K

Table 9-4. Configurations for 32-Bit Data Bus

Parameter	8-Bit		16-Bit				32-Bit	
	16 Mbits	64Mbits	16 Mbits	64 Mbits	128 Mbits	256 Mbits	64 Mbits	128 Mbits
Number of devices	4		2				1	
Total size	8 Mbytes	32 Mbytes	4 Mbytes	16 Mbytes	32 Mbytes	64 Mbytes	8 Mbytes	16 Mbytes
Total page size	2 Kbytes	2 Kbytes	1 Kbyte	1 Kbyte	2 Kbytes	2 Kbytes	1 Kbyte	1 Kbyte
Number of banks	2	4	2	4	4	4	4	4
Refresh count in 64 mS	4K	4K	4K	4K	4K	8K	4K	8K

A device's data bus width affects its connection to SDRAM address pins. A device can be configured for external data bus width of 16 or 32 bits by appropriate configuration of the WSEL signal during reset. See Section 19.18, "Operating Mode Configuration Pins." The following tables describe address pin connections and internal address multiplexing.

Table 9-5. Internal Address Multiplexing (16-Bit Data Bus)

Device Pin	SDRAM Pin	8-Bit		16-Bit			
		16 Mbits	64 Mbits	16 Mbits	64 Mbits	128 Mbits	256 Mbits
A1	A0	A1/A10	A1/A10	A1/A9	A1/A9	A1/A10	A1/A10
A2	A1	A2/A11	A2/A11	A2/A10	A2/A10	A2/A11	A2/A11
A3	A2	A3/A12	A3/A12	A3/A11	A3/A11	A3/A12	A3/A12
A4	A3	A4/A13	A4/A13	A4/A12	A4/A12	A4/A13	A4/A13
A5	A4	A5/A14	A5/A14	A5/A13	A5/A13	A5/A14	A5/A14
A6	A5	A6/A15	A6/A15	A6/A14	A6/A14	A6/A15	A6/A15
A7	A6	A7/A16	A7/A16	A7/A15	A7/A15	A7/A16	A7/A16
A8	A7	A8/A17	A8/A17	A8/A16	A8/A16	A8/A17	A8/A17
A9	A8	A9/A18	A9/A18	A17	A17	A9/A18	A9/A18
A10	A9	A19	A19	A18	A18	A19	A19
A10_PRECHG	A10/AP	A20	A20	A19	A19	A20	A20
A12	A11		A21		A20	A21	A21
A13	A12						A22
SDBA0	BA0	A21	A22	A20	A21	A22	A23
SDBA1	BA1		A23		A22	A23	A24

Table 9-6. Internal Address Multiplexing (32-Bit Data Bus)

Device Pin	SDRAM Pin	8-Bit		16-Bit				32-Bit	
		16 Mbits	64 Mbits	16 Mbits	64 Mbits	128 Mbits	256 Mbits	64 Mbits	128 Mbits
A2	A0	A2/A11	A2/A11	A2/A10	A2/A10	A2/A11	A2/A11	A2/A10	A2/A10
A3	A1	A3/A12	A3/A12	A3/A11	A3/A11	A3/A12	A3/A12	A3/A11	A3/A11
A4	A2	A4/A13	A4/A13	A4/A12	A4/A12	A4/A13	A4/A13	A4/A12	A4/A12
A5	A3	A5/A14	A5/A14	A5/A13	A5/A13	A5/A14	A5/A14	A5/A13	A5/A13
A6	A4	A6/A15	A6/A15	A6/A14	A6/A14	A6/A15	A6/A15	A6/A14	A6/A14
A7	A5	A7/A16	A7/A16	A7/A15	A7/A15	A7/A16	A7/A16	A7/A15	A7/A15
A8	A6	A8/A17	A8/A17	A8/A16	A8/A16	A8/A17	A8/A17	A8/A16	A8/A16
A9	A7	A9/A18	A9/A18	A9/A17	A9/A17	A9/A18	A9/A18	A9/A17	A9/A17
A10	A8	A10/A19	A10/A19	A18	A18	A10/A19	A10/A19	A18	A18
A11	A9	A20	A20	A19	A19	A20	A20	A19	A19
A10_PRECHG	A10/AP	A21	A21	A20	A20	A21	A21	A20	A20
A13	A11		A22		A21	A22	A22		A21
A14	A12						A23		
SDBA0	BA0	A22	A23	A21	A22	A23	A24	A21	A22
SDBA1	BA1		A24		A23	A24	A25	A22	A23

9.4 SDRAM Banks, Page Hits, and Page Misses

SDRAMs can have up to four banks addressed by SDBA1 and SDBA0. The two uppermost address lines of the memory space are mapped to SDBA1 and SDBA0. Specific address lines mapped depend on the size of the SDRAM array and are defined in the SDCR.

Each of the four bank address registers holds the page address (lower bits of row address) of an activated page. Each bank can have one open page. A device with two banks can have two open pages. A device with four banks can have four open pages.

The lower addresses of the row address are compared against the page address register content. If it does not match, the SDRAM controller precharges the open page on the accessed bank and activates the new required page. After this, the SDRAM controller executes the READ or WRITE command. Concurrently, the page address register of the bank is updated. This is called a page miss.

After a bank is activated, it remains activated until the next page access causing a page miss.

A precharge of a deactivated bank is allowed and simply ignored by the SDRAM.

If a memory access is to an open page only the READ or WRITE command is issued to the SDRAM. This is called a page hit.

In two-page SDRAMs, banks 2 and 3 are invalid and must not be addressed. To avoid address aliasing, the user should restrict the chip select address range to the space available in the SDRAMs.

9.5 SDRAM Registers

The SDRAM configuration register (SDCR) and the SDRAM timing register (SDTR) are described in the following sections. Note that SDRAM provides a mode register that is not part of the SDRAM controller memory model. The SDRAM mode register is automatically configured during initialization.

9.5.1 SDRAM Configuration Register (SDCR)

SDCR is used to configure the SDRAM controller address multiplexers for the type of SDRAM devices used on the system board.

	15	14 13	12 11	10 8	7	6 5	4	3	2 1	0
Write	—	MCAS	—	BALOC	GSL	—	REG	INV	SLEEP	ACT	INIT
Reset	0	00	00	001	0	00	0	1	0	0	0
R/W	Read/Write								Read-only		R/W
Addr	MBAR + 0x0182										

Figure 9-3. SDRAM Configuration Register (SDCR)

Table 9-7 describes SDCR fields.

Table 9-7. SDCR Field Descriptions

Bits	Name	Description
15	—	Reserved, should be cleared.
14–13	MCAS	Maximum CAS address. Determines which device address output carries the column address msb. For example, if the SDRAM device has eight column addresses and the data bus is configured for 32 bits, the column address appears on A[9:2], so the maximum column address is A9. The lsb of the row address is therefore taken from internal address signal A10 and is used by the SDRAM controller to control address multiplexing. 00 A7 01 A8 10 A9 11 A10
12–11	—	Reserved, should be cleared.
10–8	BALOC	Bank address location. Determines the internal addresses that become SDRAM bank addresses. SDBA1SDBA0 000Reserved 001A21A20 010A22A21 011A23A22 100A24A23 101A25A24 110Reserved 111Reserved
7	GSL	Go to sleep. Setting GSL powers down the SDRAM and puts it into auto-refresh mode.
6–5	—	Reserved, should be cleared.
4	REG	Register read data for 66 MHz. Writing a 1 to REG enables pipeline mode for read data access. It forces the SDRAM controller to register the read data, adding one wait state to single-read accesses and to the first word read during a burst. REG must be 1 for clock frequencies above 48 MHz to meet input setup timing for data input (See electrical characteristics timing SD16). The description of INV shows how REG and INV interact.
3	INV	Invert clock. Inverts SDRAM clock output for timing refinement. If REG = 0 0 Do not add wait state for read accesses. 1 Shift SDCLK edge 180° If REG = 1 0 Add wait state for read accesses, all frequencies 1 Invalid, do not use.
2	SLEEP	SLEEP mode. This read-only status bit goes high when setting SDCR[GSL] has taken effect and the SDRAM is powered down. SLEEP is cleared when SDRAM is in auto-refresh mode.
1	ACT	Active. This read-only status bit goes high when the SDRAM controller completes its initialization. ACT is cleared by writing to SDCR.
0	INIT	Initialization enable. Setting INIT enables initialization of the SDRAM based on other SDCR bit values. Initialization starts after the first dummy write access to the SDRAM. CSOR7, CSBR7, and SDTR must be configured before setting INIT. CAUTION: CSOR7[WAITST] must equal 0x1F when $\overline{\text{CS7}}$/$\overline{\text{SDCS}}$ is configured for SDRAM.

9.5.2 SDRAM Timing Register (SDTR)

The SDTR is used to configure SDRAM controller refresh counters for the type of SDRAM devices used and the number of clocks required for each type of SDRAM access. The reset value is 0x2115. For lower CPU clock frequencies, precharge and activate times can be reduced to eliminate up to 2 clock cycles from the read and write accesses. Consult the data sheets of the SDRAMs being considered.

	15–10	9–8	7–6	5–4	3–2	1–0
Write	RTP	RC	—	RP	RCD	CLT
Reset	0010_00	01	00	01	01	01
R/W	R/W					
Addr	MBAR + 0x0186					

Figure 9-4. SDRAM Timing Register (SDTR)

Table 9-8 describes SDTR fields.

Table 9-8. SDTR Field Descriptions

Bits	Name	Description
15–10	RTP	Refresh timer prescaler. Determines the number of clock cycles x 16 between refreshes. The following table describes different recommended prescaler settings for different clock frequencies including a margin of 1.2 μS. Recommended values are as follows: **RTP** / **15.6 μs = 1/f*RTP*16** / **System Clock** 111101 / 61 / 66 MHz 101011 / 43 / 48 MHz 011101 / 29 / 33 MHz 010110 / 22 / 25 MHz 000100 / 4 / 5 MHz (emulator)
9–8	RC	Refresh count. Indicates the number of clock cycles spent in refresh state (RC + 5). Refresh occurs during the first of these clock cycles; the rest of the time is the delay that must occur before the SDRAM is ready to do anything else. 00 5 cycles 01 6 cycles (default) 10 7 cycles 11 8 cycles
7–6	—	Reserved, should be cleared.
5–4	RP	Precharge time. Specifies number of clock cycles taken for a precharge (RP + 1). 00 1 cycle 01 2 cycles (default) 10 3 cycles 11 4 cycles

Table 9-8. SDTR Field Descriptions (continued)

Bits	Name	Description
3–2	RCD	RAS-to-CAS delay. The reset value is 1, requiring 2 clock cycles for SDRAM activation. 00 1 cycle 01 2 cycles (default) 10 3 cycles 11 4 cycles
1–0	CLT	CAS latency. Specifies the delay programmed into the SDRAM mode register during initialization, indicating the time between a READ command being issued to the SDRAM and data appearing on the pins. The SDRAM controller uses this value to sequence its state machine during read operations. CLT cannot be changed after the mode register is written. 00 Reserved 01 2-cycle CAS latency (default) 1x Reserved

9.6 Auto Initialization

Each SDRAM requires an initialization sequence before it can be accessed. After power up, the SDRAM requires a certain time (100 µS) before it can accept the first command of the initialization procedure. After this time, one PRECHARGE ALL command and eight REFRESH commands are required. After initialization, an INITIATE LOAD REGISTER SET command is executed, which writes the SDRAM configuration into the SDRAM device mode register.

SDRAM mode register data is transferred on the address signals, so all SDRAM devices are configured simultaneously.

Initialization is enabled by setting SDCR[INIT] and performing a dummy write to the SDRAM address space. The SDRAM controller executes the required PRECHARGE and REFRESH commands and automatically loads the mode register, which configures the SDRAM as follows:

- SDRAM internal burst is always disabled.
- CAS latency is defined by SDTR[CLT].

SDCR[ACT] is set after initialization.

9.7 Power-Down and Self-Refresh

The SDRAM can be powered down by setting SDCR[GSL]. The SDRAM controller executes the required power-down command sequence to ensure self-refresh during power down. The SDRAM controller completes the current memory access then automatically issues the following commands to force the SDRAM into sleep mode:

precharge all banks
nop
auto refresh command

In self-refresh mode, SDRAM devices can refresh themselves without an external clock. After power-down completes, SDCR[SLEEP] is set, the SDRAM clock output is driven high, and SDCLKE is driven low.

To wake up the SDRAMs, SDCR[GSL] must be cleared. SDCR[SLEEP] remains set while the SDRAM is exiting sleep mode and is cleared when the SDRAM completes the correct sequence to exit sleep mode.

9.8 Performance

The maximum performance of the SDRAM controller is determined by the required number of cycles for page activation and precharge. The read access is influenced by the CAS latency. All SDRAM accesses are in page mode. The following table shows the number of required cycles including all dead cycles for each type of read/write SDRAM access. It assumes default timing configuration using an at least PC100-compliant SDRAM device at 66 MHz. Page miss latency includes the cycles to precharge the last open page and activate the new page before the read/write access. There are no precharge cycles when an address hits an open page.

In Table 9-9, the timing configuration is RTP = 61, RC = negligible, RCD = 0 (or 1), RP = 1 (or 0), and CLT = 1.

Table 9-9. SDRAM Controller Performance, 32-Bit Port, (RCD = 0, RP = 1) or (RCD = 1, RP = 0)

SDRAM Access		Number of System Clock Cycles	
		REG = 0, INV = 0	REG = 1, INV = 0
Single-beat read	Page miss	8	9
	Page hit	5	6
Single-beat write	Page miss	6	6
	Page hit	3	3
Burst read	Page miss	8-1-1-1 = 11	9-1-1-1 = 12
	Page hit	5-1-1-1 = 8	6-1-1-1 = 9
Burst write	Page miss	6-1-1-1 = 9	6-1-1-1 = 9
	Page hit	3-1-1-1 = 6	3-1-1-1 = 6

In Table 9-10, the timing configuration is RTP = 61, RC = negligible, RCD = 0, RP = 0, and CLT = 1.

Table 9-10. SDRAM Controller Performance, 32–Bit Port, (RCD = 0, RP = 0)

SDRAM Access		Number of System Clock Cycles	
		REG = 0, INV = 0	REG = 1, INV = 0
Single-beat read	Page miss	7	8
	Page hit	5	6
Single-beat write	Page miss	5	5
	Page hit	3	3
Burst read	Page miss	7-1-1-1 = 10	8-1-1-1 = 11
	Page hit	5-1-1-1 = 8	6-1-1-1 = 9
Burst write	Page miss	5-1-1-1 = 8	5-1-1-1 = 8
	Page hit	3-1-1-1 = 6	3-1-1-1 = 6

In Table 9-11, the timing configuration is RTP = 61, RC = negligible, RCD = 1, RP = 1, and CLT = 1.

Table 9-11. SDRAM Controller Performance (RCD = 1, RP = 1), 16-Bit Port

SDRAM Access		Number of System Clock Cycles	
		REG = 0, INV = 0	REG = 1, INV = 0
Single-beat read	Page miss	9	10
	Page hit	5	6
Single-beat longword read	Page miss	9-1	10-1
	Page hit	5-1	6-1
Single-beat write	Page miss	7	7
	Page hit	3	3
Single-beat longword write	Page miss	7-1	7-1
	Page hit	3-1	3-1
Burst read	Page miss	9-1-1-1-1-1-1-1 = 16	10-1-1-1-1-1-1-1 = 17
	Page hit	5-1-1-1-1-1-1-1 = 12	6-1-1-1-1-1-1-1 = 13
Burst write	Page miss	7-1-1-1-1-1-1-1 = 14	7-1-1-1-1-1-1-1 = 14
	Page hit	3-1-1-1-1-1-1-1 = 10	3-1-1-1-1-1-1-1 = 10

In Table 9-12, the timing configuration is RTP = 61, RC = negligible, RCD = 0 (or 1), RP = 1 (or 0), and CLT = 1.

Table 9-12. SDRAM Controller Performance, 16-Bit Port, (RCD=0, RP=1) or (RCD=1, RP = 0)

SDRAM Access		Number of System Clock Cycles	
		REG = 0, INV = 0	REG = 1, INV = 0
Single-beat read	Page miss	8	9
	Page hit	5	6
Single-beat longword read	Page miss	8-1	9-1
	Page hit	5-1	6-1
Single-beat write	Page miss	6	6
	Page hit	3	3
Single-beat longword write	Page miss	6-1	6-1
	Page hit	3-1	3-1
Burst read	Page miss	8-1-1-1-1-1-1-1 = 15	9-1-1-1-1-1-1-1 = 16
	Page hit	5-1-1-1-1-1-1-1 = 12	6-1-1-1-1-1-1-1 = 13
Burst write	Page miss	6-1-1-1-1-1-1-1 = 13	6-1-1-1-1-1-1-1 = 13
	Page hit	3-1-1-1-1-1-1-1 = 10	3-1-1-1-1-1-1-1 = 10

In Table 9-13, the timing configuration is RTP = 61, RC = negligible, RCD = 0, RP = 0, and CLT = 1.

Table 9-13. SDRAM Controller Performance, 16-Bit Port, (RCD=0, RP=0)

SDRAM Access		Number of System Clock Cycles	
		REG = 0, INV = 0	REG = 1, INV = 0
Single-beat read	Page miss	7	8
	Page hit	5	6
Single-beat longword read	Page miss	7-1	8-1
	Page hit	5-1	6-1
Single-beat write	Page miss	5	5
	Page hit	3	3
Single-beat longword write	Page miss	5-1	5-1
	Page hit	3-1	3-1
Burst read	Page miss	7-1-1-1-1-1-1-1 = 14	8-1-1-1-1-1-1-1 = 15
	Page hit	5-1-1-1-1-1-1-1 = 12	6-1-1-1-1-1-1-1 = 13
Burst write	Page miss	5-1-1-1-1-1-1-1 = 12	5-1-1-1-1-1-1-1 = 12
	Page hit	3-1-1-1-1-1-1-1 = 10	3-1-1-1-1-1-1-1 = 10

9.9 Solving Timing Issues with SDCR[INV]

When some SDRAM devices (such as 4 x 8 bit wide SDRAMs) are used, the SDCLK and other control signals are more loaded than data signals. In normal MCF5272 operation, the write data and all other control signals change with the positive edge of SDCLK. Large capacitive loads on SDCLK can cause long delays on SDCLK, possibly causing SDRAM hold-time violations during writes. The clock may arrive at the same time as the write data.

The write data setup time to SDCLK edge may not meet device requirements at the SDRAM. This timing issue cannot be solved by reducing the SDCLK frequency. SDCLK must be delayed further to meet setup/hold margin on the SDRAM data input. Setting INV provides a 180° phase shift and moves the positive clock edge far beyond the data edge.

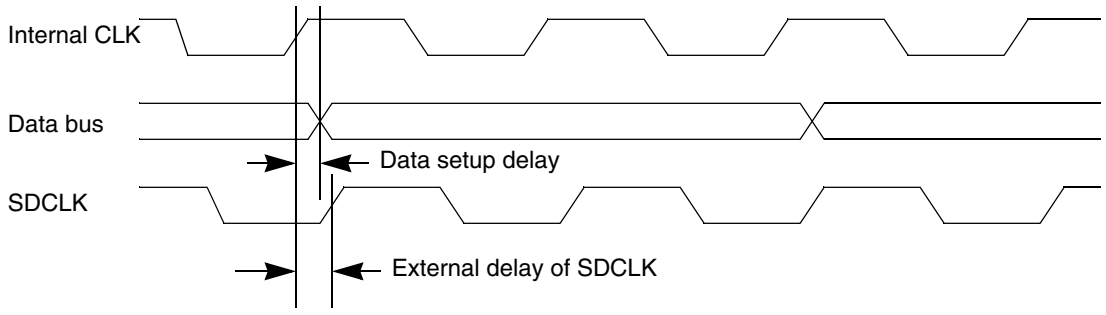

Figure 9-5. Example Setup Time Violation on SDRAM Data Input during Write

As Figure 9-6 shows timing relationships between SDCLK and the remaining data and control signals can be refined by setting SDCR[INV], which inverts the SDRAM clock. SDCR[REG] must always be cleared when SDCR[INV] is set.

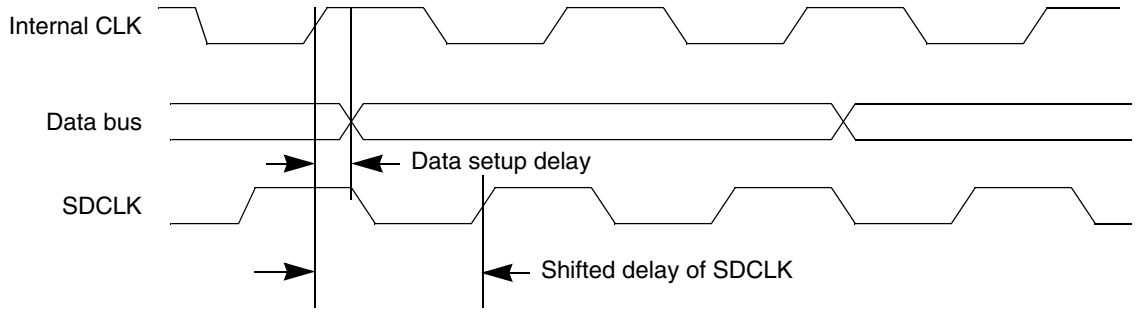

Figure 9-6. Timing Refinement with Inverted SDCLK

NOTE

If the delay difference between the fastest data signal and the slowest control signal exceeds half of the clock cycle time, the clock shift can cause hold-time violations on control signals.

The incoming data setup time should be inspected during reads. The active clock edge event of SDCLK now precedes the MCF5272 internal active clock edge event when (REG = 0). This behavior is frequency dependent. The two following scenarios are possible:

- High-speed timing refinement with true CAS latency. See Figure 9-7.
- Low-speed timing refinement with reduced effective CAS latency.

If the delay between shifted SDCLK and following internal system clock edge is shorter than the read access time of the SDRAM, data is sampled with the true CAS latency.

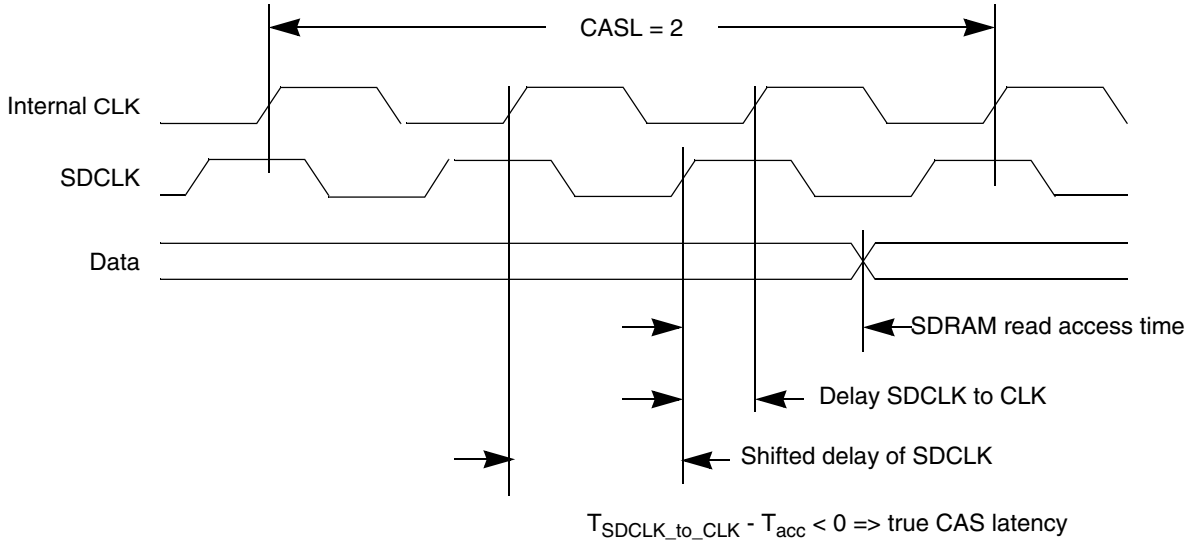

Figure 9-7. Timing Refinement with True CAS Latency and Inverted SDCLK

Selecting a system clock frequency low enough that the SDCLK-to-CLK delay is long compared to the SDRAM read access time reduces effective CAS latency by 1 cycle.

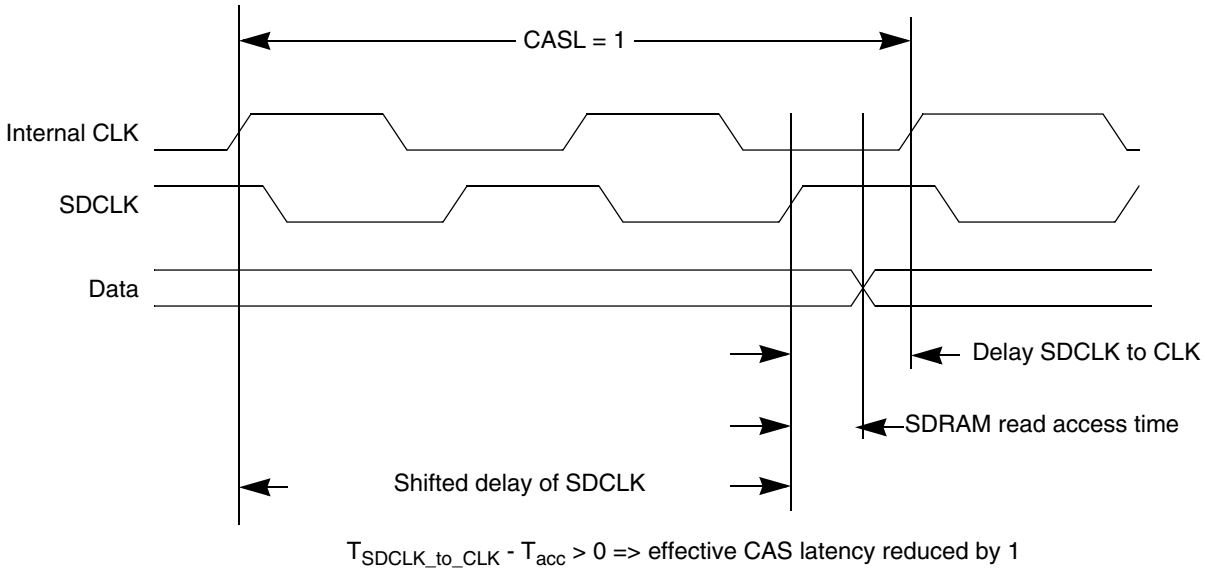

Figure 9-8. Timing Refinement with Effective CAS Latency

NOTE

When reduced effective CAS latency is used, the SDRAM is still programmed with true CAS latency. The SDRAM controller state machine must be reprogrammed for the reduced CAS latency. SDRAM initialization software programs the CAS latency of 2 and transfers it into the SDRAM mode register. After SDRAM initialization is confirmed, initialization software should change SDTR[CLT] to CAS latency 1 but should not reinitialize the SDRAM. The SDRAM controller state machine now runs with CAS latency 1 and SDRAMs run with CAS latency 2, which increases bandwidth on the SDRAM bank and improves performance.

9.10 SDRAM Interface

Setting CSBR*n*[EBI] to 0b01 enables chip select $\overline{\text{CS7}}$ for use with one physical bank of SDRAM. In this case, $\overline{\text{CS7}}$ becomes $\overline{\text{SDCS}}$. The SDRAM memory array may have a 32- or 16-bit data bus width; an 8-bit width is not supported. An array may consist of SDRAM devices with 8, 16, or 32 bits data bus width. Each SDRAM device can have from 16–256 Mbits.

The interface to the SDRAM devices is glueless. The following control signals are dedicated to SDRAM: $\overline{\text{SDCS}}$, $\overline{\text{SDWE}}$, A10_PRECHG, SDCLK, SDCLKE, $\overline{\text{RAS0}}$, $\overline{\text{CAS0}}$, and SDBA[1:0].

If SDRAM EBI mode is used, CSOR7[WAITST] should be programmed for 0x1F to ensure that the internal bus cycle termination signal is sourced from the SDRAM controller and not the chip select module.

NOTE

The SDRAM shares address and data signals with external memory and peripherals. Due to stringent SDRAM timing requirements, it is strongly recommended to buffer the address, byte strobe, and data buses between the MCF5272 and non-SDRAM memory and peripherals. Never buffer signals to the SDRAMs. See Appendix C for details on how to buffer external memory and peripherals in a system using SDRAM.

The controller allows single-beat read/write accesses and the following burst accesses:

- 16-byte cache line read bursts from 32-bit wide SDRAM with access times of *n*-1-1-1. The value of *n* depends on read, write, page miss, page hit, etc. The enable extended bursts bit in chip select option register 7 (CSOR7[EXTBURST]) must be cleared, CSBR7[EBI] must be set for SDRAM, and CSBR7[BW] must be set for a 16-byte cache line width.
- 16-byte cache line read bursts from 16-bit wide SDRAM with access times of *n*-1-1-1-1-1-1-1. CSOR7[EXTBURST] must be set, CSBR7[EBI] must be set for SDRAM, and CSBR7[BW] must be set for 16 bits.
- 16-byte read or write bursts during Ethernet DMA transfers to/from SDRAM with access times of *n*-1-1-1 or *n*-1-1-1-1-1-1-1 depending on 32 or 16 bit SDRAM port width as described in the previous two paragraphs.

These SDRAM accesses are shown in Figure 9-9 through Figure 9-15. The SDRAM supports a low-power, self-refreshing sleep mode as shown in Figure 9-14 and Figure 9-15. It is also possible to turn off the SDRAM controller completely using the power management control register in the SIM.

Figures show burst read and burst writes, with a page miss and a page hit for each case. A single-cycle read or write is identical to the first access of a burst. In normal operation the SDRAM controller refreshes the SDRAM.

As these examples show, SDCLKE is normally high and SDCLK is always active. SDCLKE can be forced to 0 and SDCLK can be shut off by putting the SDRAM controller into power down or self-refresh mode.

9.10.1 SDRAM Read Accesses

The read examples, Figure 9-9 and Figure 9-10, show a CAS latency of 2, SDCR[REG] = 0 and SDCR[INV] = 1.

In T1, the ColdFire core issues the address. This cycle is internal to the device and always occurs. In T2, the SDRAM controller determines if there is a page miss or hit. This cycle is internal to the device and always occurs.

Because Figure 9-9 shows a page miss, the PRECHARGE command (T3) and the following cycle occur. During precharge the SDRAM writes the designated on-chip RAM page buffer back into the SDRAM array. The number of cycles for a precharge is set by programming SDTR[RP]. The default after reset is two cycles. The activate new page cycle that follows (T5) is required to open a new page due to the page miss. Cycle T6 is a wait state for SDRAM activation command. It is added due to default value of 0b01 in SDTR[RCD]. For lower clock speed systems the RCD value could be written as 00 and this clock cycle can be removed. Consult the data sheets of the SDRAM devices being used.

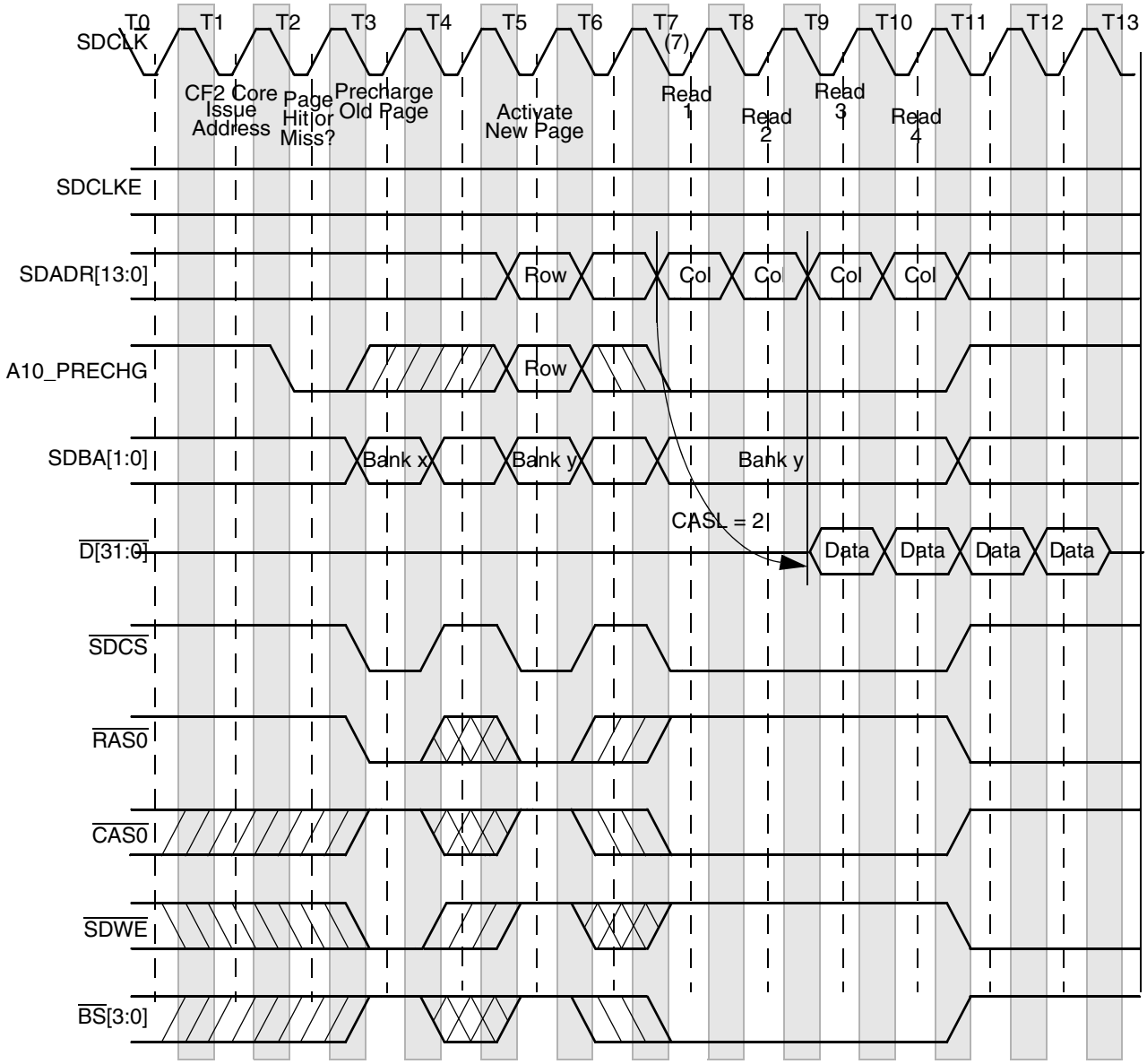

Figure 9-9. SDRAM Burst Read, 32-Bit Port, Page Miss, Access = 9-1-1-1

Figure 9-10 shows a similar burst read that hits the page. As in the page-miss example, the SDRAM controller takes a clock cycle (T2) to determine whether the access is a hit or a miss. Because it is a hit, the burst operation follows immediately.

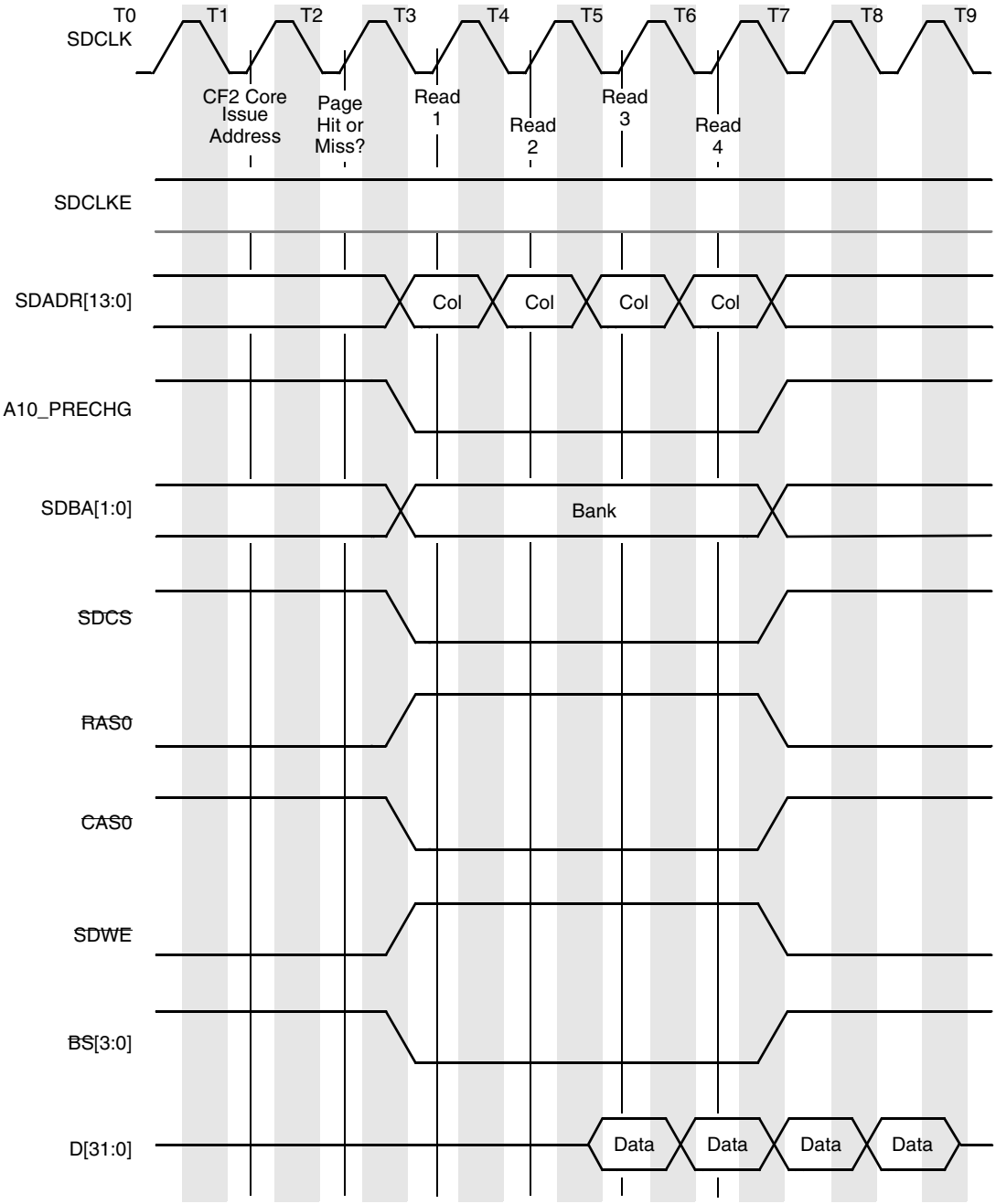

Figure 9-10. SDRAM Burst Read, 32-Bit Port, Page Hit, Access = 5-1-1-1

9.10.2 SDRAM Write Accesses

Like the read operations, shown in Figure 9-9 and Figure 9-10, the write operations require one cycle to issue the address (T1) and another (T2) to determine whether the access is page hit or miss. In the burst-write, page-miss example, shown in Figure 9-11, after the SDRAM determines that this is a page miss (T2), the precharge old page (T3) and activate new page cycles (T5) are required. Cycle T6 is a wait state for SDRAM activation command as it is in Figure 9-9.

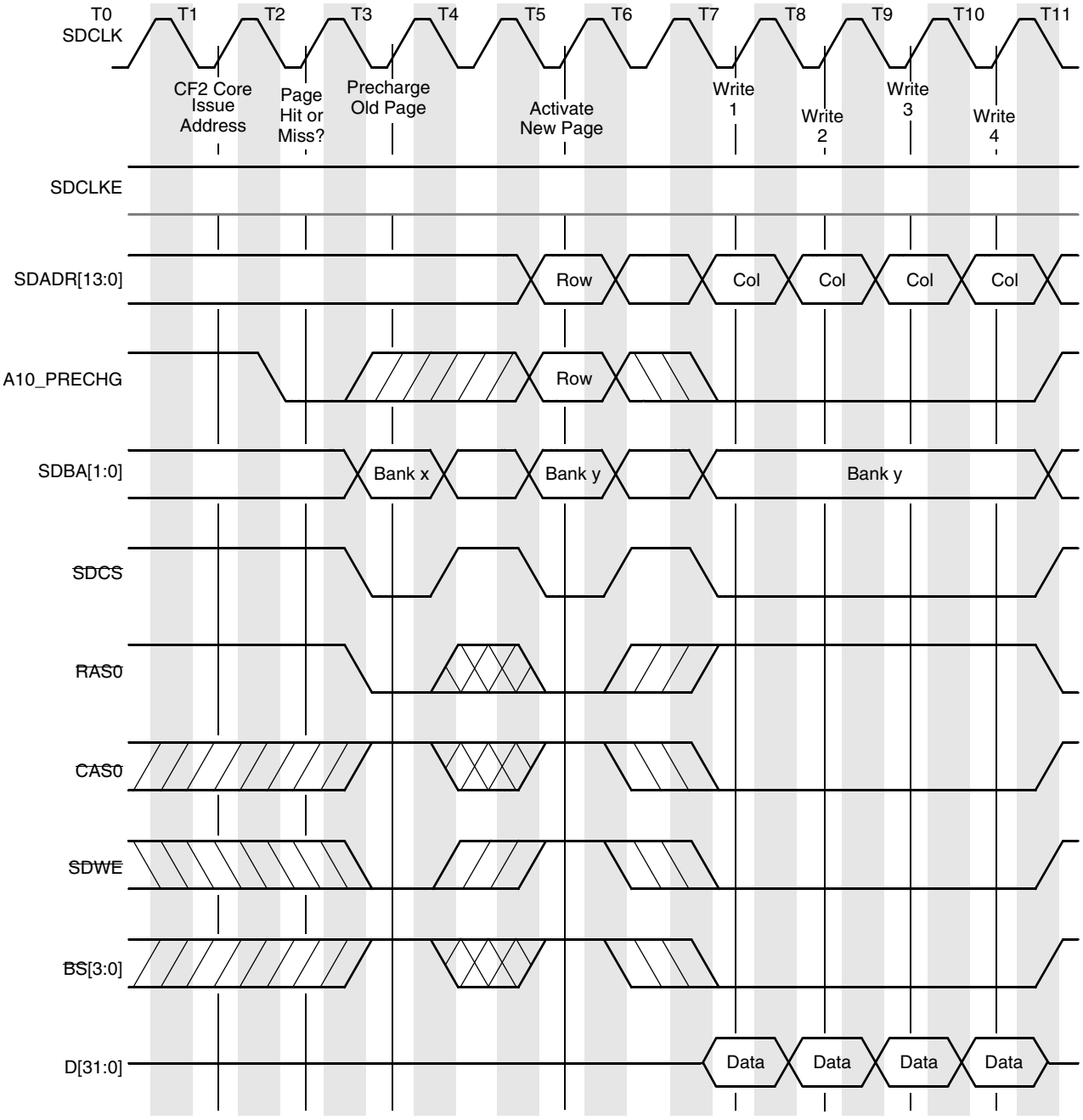

Figure 9-11. SDRAM Burst Write, 32-Bit Port, Page Miss, Access = 7-1-1-1

In the burst-write, page-hit example, shown in Figure 9-12, after the SDRAM controller determines that the access is a page hit in T2, the burst transfer begins in T3.

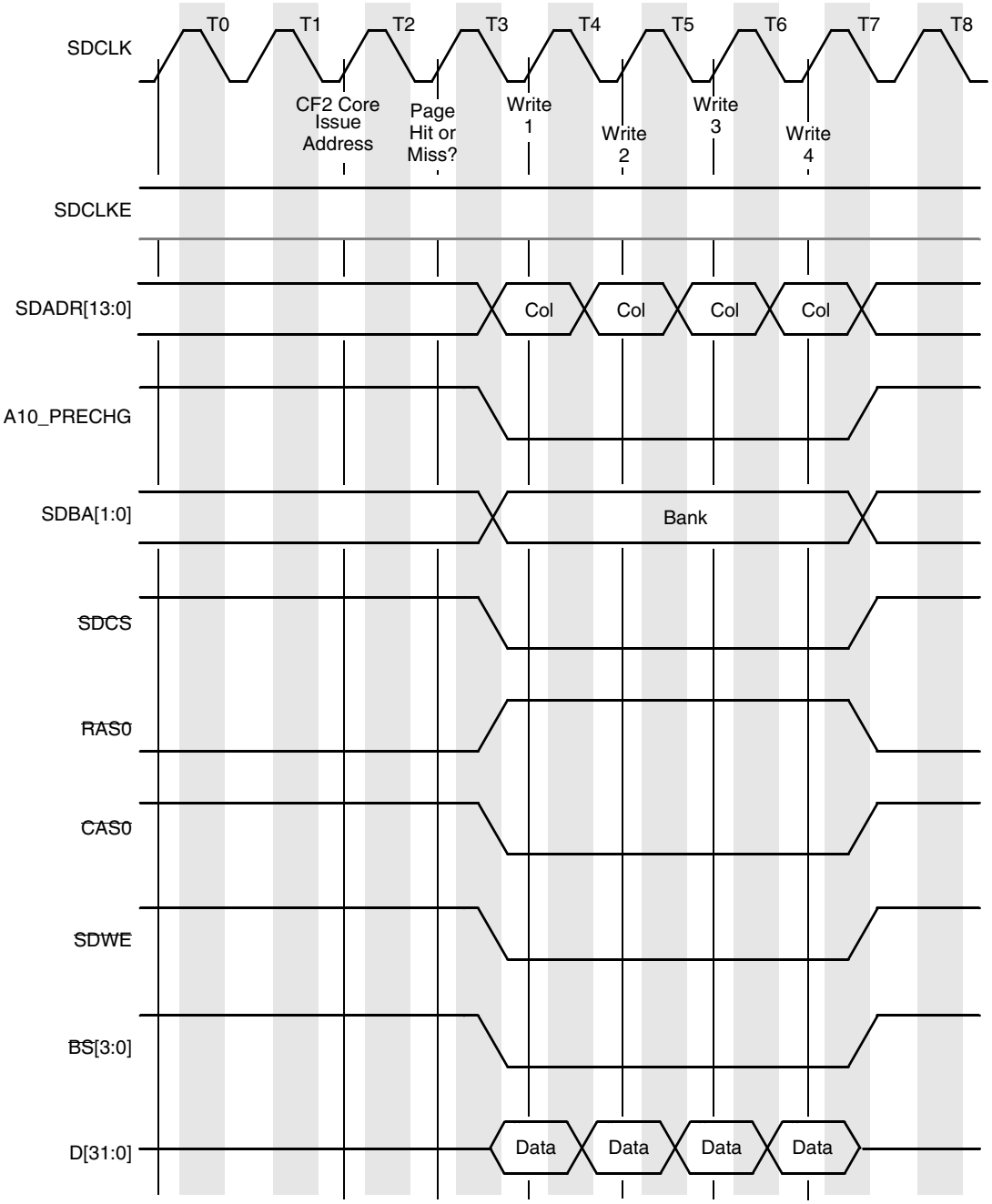

Figure 9-12. SDRAM Burst Write, 32-Bit Port, Page Hit, Access = 3-1-1-1

9.10.3 SDRAM Refresh Timing

Figure 9-13 shows refresh-cycle timing. As in Figure 9-14, during a PRECHARGE ALL command (T1), the SDRAM writes all of its on-chip RAM page buffers into the SDRAM array. SDTR[RP] determines the number of dead cycles after a precharge. Note that self refresh occurs during T3. In refresh state, SDRAM cannot accept any other command.

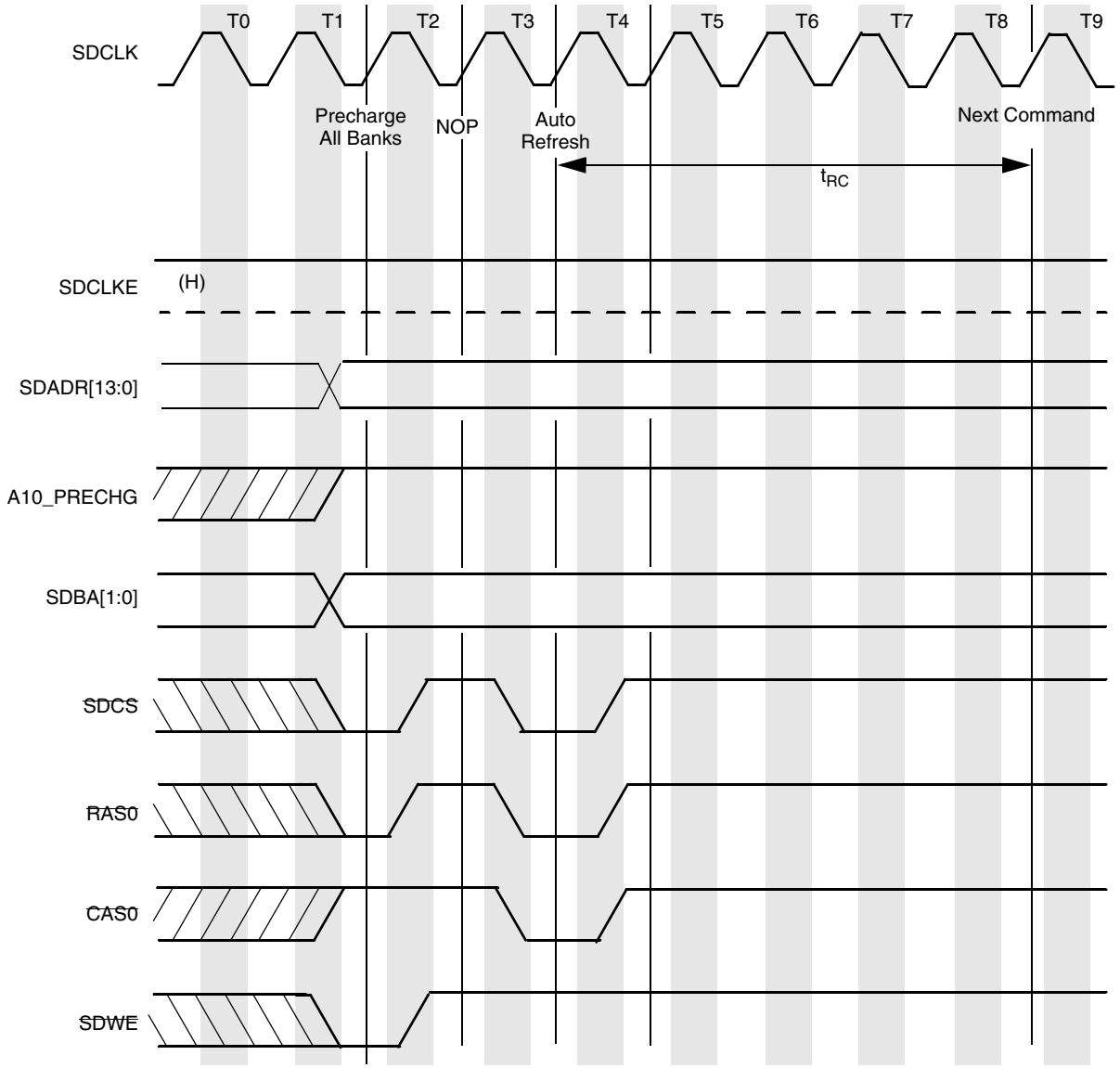

Figure 9-13. SDRAM Refresh Cycle

Figure 9-14 shows the timing for entering SDRAM self-refresh mode. During a PRECHARGE ALL command (T1), the SDRAM writes all of its on-chip RAM page buffers back into the SDRAM array. The SDTR[RP] value determines the number of dead cycles after a precharge. Note that auto refresh occurs in T3. SDTR[RC] determines the number of clock cycles the SDRAM remains in refresh state, during which time it cannot accept other commands.

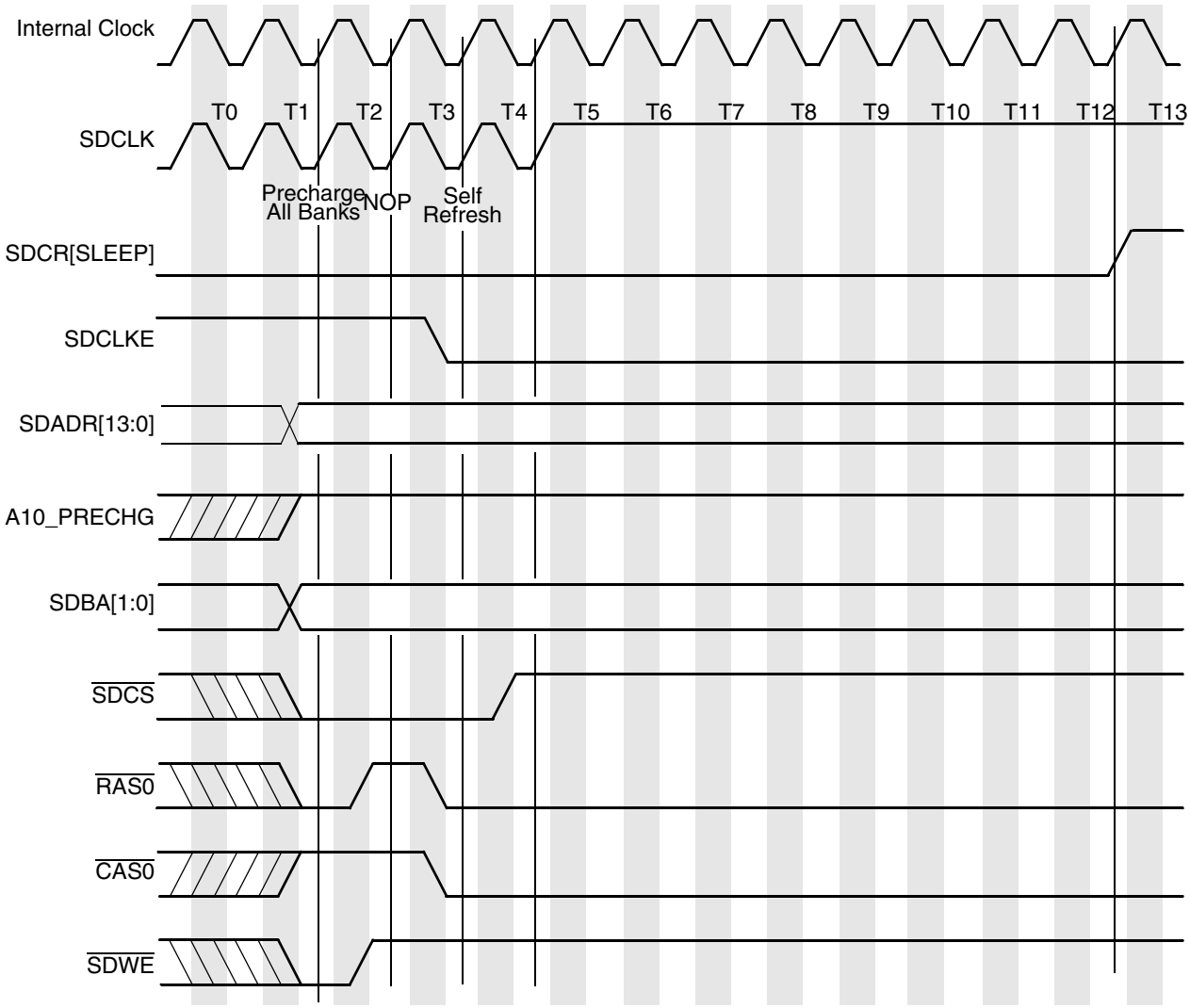

Figure 9-14. Enter SDRAM Self-Refresh Mode

Figure 9-15 shows the timing for exiting SDRAM self-refresh mode. Note that SDCR[GSL] is sampled on the rising edge of the internal clock. If it is 0, as it is here, SDRAM controller signals become active on the following negative clock edge.

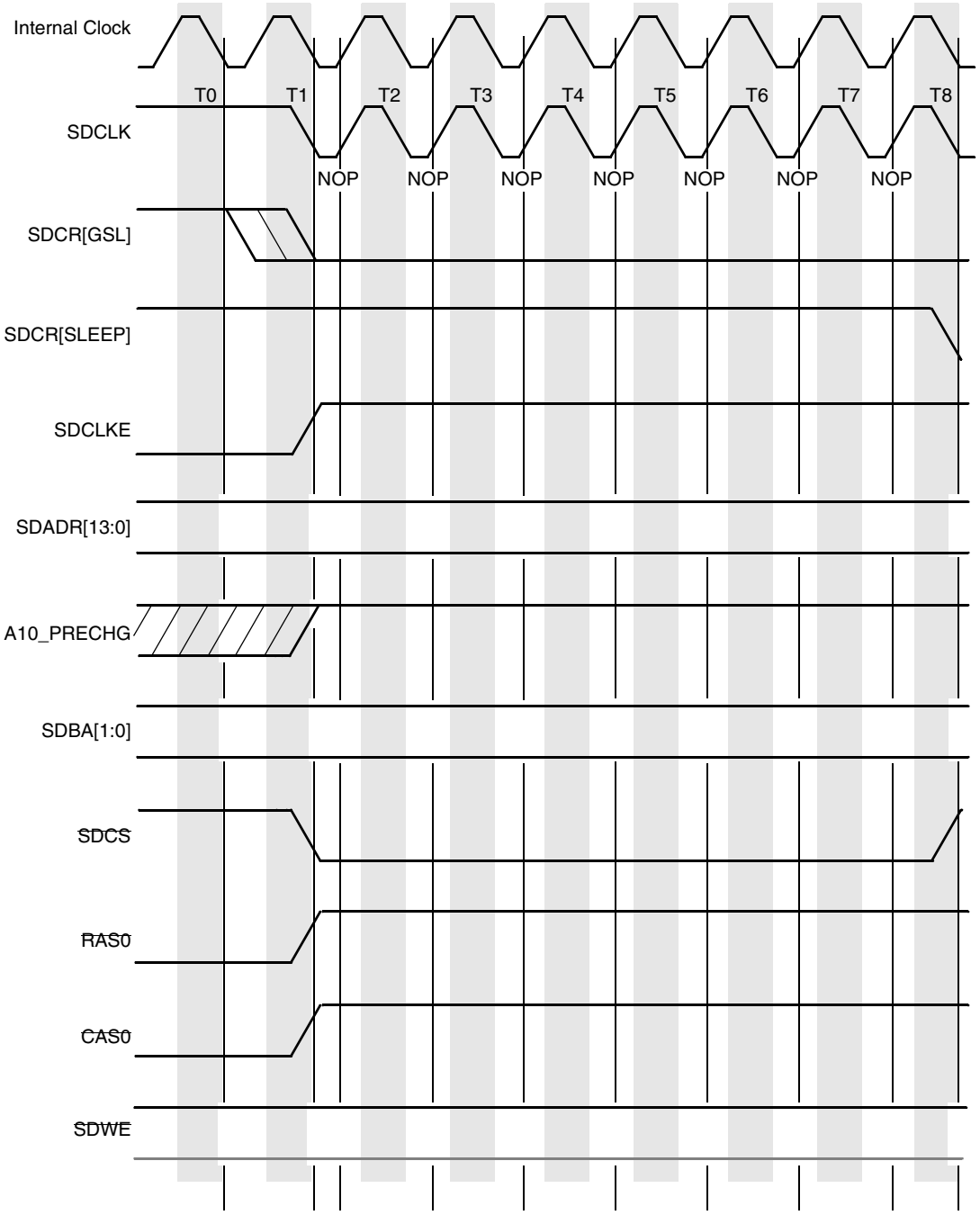

Figure 9-15. Exit SDRAM Self-Refresh Mode

Chapter 10
DMA Controller

The MCF5272 has a one-channel DMA controller that supports memory-to-memory DMA transfers that can be used for block data moves. This chapter describes in detail its signals, registers, and operating modes.

10.1 DMA Data Transfer Types

A source and destination address must be specified for any dual-address DMA transfer. These addresses can have different data transfer types, but there is always a read from the source address followed by a write to the destination address. On the MCF5272, sources and destinations can be SDRAM, external SRAM, or on-chip peripheral in any combination.

NOTE

Memory-to-memory DMA transfers run to completion if the assume request bit in the system configuration register, SCR[AR], is set. This generally prevents the CPU from recognizing interrupts and blocks bus accesses by other on-chip bus masters. It is best not to enable SCR[AR] when the DMA controller is in use. When AR = 0, the DMA controller allows the CPU and Ethernet controller to obtain bus access.

Table 10-1. DMA Data Transfer Matrix

Transfer Type	Source or Destination Address		
	SDRAM	External SRAM	On-Chip Peripheral
Byte (8 bits)	Yes	Yes	Yes
Word (16 bits)	Yes	Yes	Yes
Longword (32 bits)	Yes	Yes	Yes
Burst (4 x longword)	Yes	No	No

Note that transfers to on-chip peripherals are limited by the transfer type supported by a specific peripheral.

10.2 DMA Address Modes

The DMA address mode determines how the address output by the channel is updated after a transfer to be ready for the next transfer. The two following modes are supported:

- Static address mode—The address remains unchanged after the transfer completes. This mode should be used when the source or destination address is the FIFO data port of an on-chip peripheral.
- Increment address mode—In increment address mode, the address is incremented at the end of the transfer by the number of bytes transferred. This mode should be used when a source or destination address is in external memory.

10.3 DMA Controller Registers

The MCF5272 DMA controller supports a single DMA channel which can be used for memory-to-memory transfers.

10.3.1 DMA Mode Register (DMR)

The DMR controls various operation modes, principally the request and addressing modes. Fields include the transfer size and modifier, transfer direction, channel enable and reset.

	31	30	29–20	19–18	17–16
Field	RESET	EN	—	RQM	—
Reset	0000_0000_0000_0000				
R/W	R/W				

	15	14–13	12–10	9–8	7	6	5	4–2	1–0
Field	—	DSTM	DSTT	DSTS	—	—	SRCM	SRCT	SRCS
Reset	0	01	1_00	01	0	0	1	1_01	01
R/W	R/W								
Addr	MBAR + 0x00E0								

Figure 10-1. DMA Mode Register (DMR)

Table 10-2 describes DMR fields.

Table 10-2. DMR Field Descriptions

Bits	Name	Description
31	RESET	Reset. Writing a 1 to this location causes the DMA controller to reset to a condition where no transfers are taking place. EN is cleared, preventing new transfers.
30	EN	Enable. Controls whether the DMA channel is enabled to perform transfers. 0 DMA transfers are disabled. 1 DMA transfers are enabled. The DMA controller can respond to requests from the peripheral or generates internal requests in dual address mode, so long as the conditions described under the DMA interrupt flags (see Section 10.3.2, “DMA Interrupt Register (DIR)”) do not prevent transfers from going ahead.
29–20	—	Reserved, should be cleared.

Table 10-2. DMR Field Descriptions (continued)

<table>
<tr><th>Bits</th><th>Name</th><th>Description</th></tr>
<tr><td>19–18</td><td>RQM</td><td>Request mode. Determines the request mode of the channel. This must be 11.
00–10 Reserved, do not use.
11 Dual address request mode. Both the DMA source and DMA destination are memory addresses. The MCF5272 supports only dual-address request mode.</td></tr>
<tr><td>17–15</td><td>—</td><td>Reserved, should be cleared.</td></tr>
<tr><td>14–13</td><td>DSTM</td><td>Destination addressing mode for the channel.
00 Static address mode
01 Increment address mode
1x Reserved, do not use.</td></tr>
<tr><td>12–10</td><td>DSTT</td><td>Destination addressing type. Used internal to the MCF5272 to qualify the address bits. This value should be compatible with the CSCRn[TM] value used for external RAM or peripheral device access.
000 Reserved
001 User data access
010 User code access
011–100 Reserved
101 Supervisor data access
110 Supervisor code access
111 Reserved</td></tr>
<tr><td>9–8</td><td>DSTS</td><td>Destination data transfer type. The DMA controller buffers data from the source address data fetches until there are enough bytes to perform a destination data write of the size programmed in these bits. Thus it is possible to configure source accesses to be byte type and destination addresses to be line burst type. In this case 16 individual byte reads are performed followed by an indivisible burst write of four longwords. Longword or line bursts are the most efficient data transfers.
<table>
<tr><th>DSTS</th><th>Data Transfer Type</th><th>Address Incremented by</th></tr>
<tr><td>00</td><td>Longword</td><td>4</td></tr>
<tr><td>01</td><td>Byte</td><td>1</td></tr>
<tr><td>10</td><td>Word</td><td>2</td></tr>
<tr><td>11</td><td>16-byte line burst</td><td>16. Valid only for SDRAM.</td></tr>
</table></td></tr>
<tr><td>7</td><td>—</td><td>Reserved, should be cleared.</td></tr>
<tr><td>6</td><td>—</td><td>Reserved, should be cleared.</td></tr>
<tr><td>5</td><td>SRCM</td><td>Source addressing mode of the channel.
0 Static address mode
1 Increment address mode</td></tr>
<tr><td>4–2</td><td>SRCT</td><td>Source addressing type. Used internal to the MCF5272 to qualify the address bits. The value should be compatible with the CSCRn[TM] value used for external RAM or peripheral device access.
000 Reserved
001 User data access
010 User code access
011 Reserved
100 Reserved
101 Supervisor data access
110 Supervisor code access
111 Reserved</td></tr>
</table>

Table 10-2. DMR Field Descriptions (continued)

Bits	Name	Description
1–0	SRCS	Source data transfer type. Determines the amount of data the DMA controller fetches and buffers data from the source address. When there are enough bytes to perform a destination data write of the size programmed in DSTS, the data is written to the destination address. Thus source accesses can be longword type and destination addresses can be line burst type. In this case, 4 longword reads are performed followed by an indivisible burst write of 4 longwords. The most efficient data transfer method is to use longword or line burst transfer types.

SRCS	Data Transfer Type	Address Incremented by
00	Longword	4
01	Byte	1
10	Word	2
11	16-byte line burst	16. Valid only for SDRAM.

10.3.2 DMA Interrupt Register (DIR)

The DIR, Figure 10-2, contains status bits and their corresponding interrupt enables.

	15–13	12	11	10	9	8	7–5	4	3	2	1	0
Field	—	INVEN	ASCEN	—	TEEN	TCEN	—	INV	ASC	—	TE	TC
Reset	0000_0000_0000_0000											
R/W	R/W											
Addr	MBAR + 0x00E6											

Figure 10-2. DMA Interrupt Register (DIR)

Table 10-3 describes DIR fields.

Table 10-3. DIR Field Descriptions

Bits	Name	Description
15–13	—	Reserved, should be cleared.
12	INVEN	Invalid combination interrupt enable. 0 INV interrupt is disabled. 1 INV interrupt is enabled.
11	ASCEN	Address sequence complete interrupt enable. 0 ASC interrupt is disabled. 1 ASC interrupt is enabled.
10	—	Reserved, should be cleared.
9	TEEN	Transfer error interrupt enable. 0 TE interrupt is disabled. 1 TE interrupt is enabled.
8	TCEN	Transfer complete interrupt enable. 0 TC interrupt is disabled. 1 TC interrupt is enabled.
7–5	—	Reserved, should be cleared.

Table 10-3. DIR Field Descriptions (continued)

Bits	Name	Description
4	INV	Invalid combination. 0 No invalid combination detected. 1 An invalid combination of request and address modes is programmed into the mode register. INV remains set until it is cleared by writing a 1 to it or by a hardware reset. Writing a 0 has no effect. No further transfers can take place when this bit is set.
3	ASC	Address sequence complete. 0 Address sequence is not complete. 1 The address sequence is complete. This occurs when the byte counter decrements to 0. Corresponds to DMA complete. ASC remains set until it is cleared by writing a 1 to its location or by a hardware reset. Writing a 0 has no effect. No further transfers can take place when ASC is set. It is important to ensure that the combination of source address, destination address, and transfer sizes ensures that the byte counter always decrements to 0.
2	—	Reserved, should be cleared.
1	TE	Transfer error. 0 No transfer error. 1 A DMA data transfer terminated with an error such as an internally generated bus error. This generally occurs when the address is not decoded successfully by an on-chip peripheral or by a chip select register. TE remains set until it is cleared by writing a 1 to its location or by a hardware reset. Writing 0 has no effect. No further transfers can take place when TE is set.
0	TC	Transfer complete. 1 A data transfer completed successful. The bit is cleared when DMA module is reset. Writing a 0 to this location has no effect. This bit is available to show that the DMA transfers have started. Otherwise it is not essential to monitor the status of this bit.

10.3.3 DMA Source Address Register (DSAR)

The DSAR provides a 32-bit address, which the DMA controller drives onto the internal address bus for all of the channel's read accesses. The address value is altered after each read access according to the addressing mode.

	31	0
Field	SRCADR	
Reset	0000_0000_0000_0000_0000_0000_0000_0000	
R/W	R/W	
Addr	MBAR + 0x00EC	

Figure 10-3. DMA Source Address Register (DSAR)

10.3.4 DMA Destination Address Register (DDAR)

The DDAR provides a 32-bit address that the DMA controller drives onto the internal address bus for all of the channel's write accesses. The address is altered after each write access according to the addressing mode.

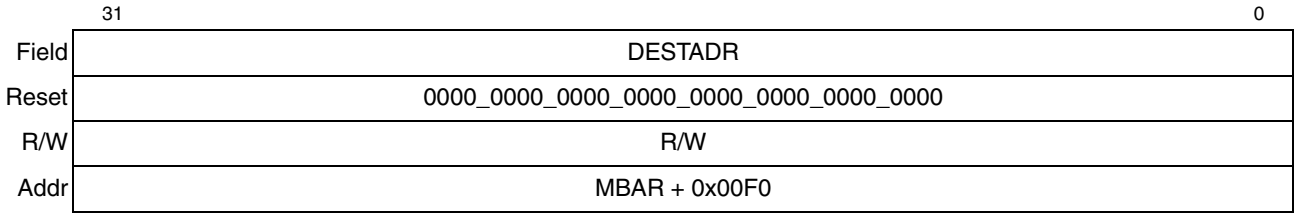

Figure 10-4. DMA Destination Address Register (DDAR)

10.3.5 DMA Byte Count Register (DBCR)

The DBCR is initially loaded with the number of bytes to be transferred during the DMA. After each transfer, the DBCR decrements by the number of bytes transferred. DIR[ASC] is set when the byte counter reaches zero. The user must ensure that the bytes remaining to be transferred and the transfer size are such that the byte counter decrements to zero or wraps around without setting the ASC flag.

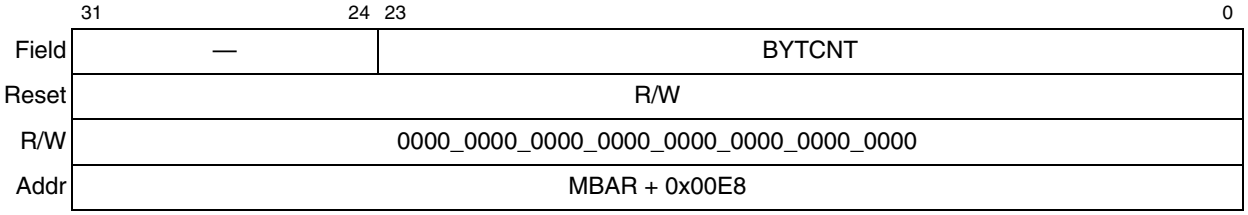

Figure 10-5. DMA Byte Count Register (DBCR)

Chapter 11
Ethernet Module

This chapter begins with a feature-set overview, a functional block diagram, and transceiver connection information for both MII and seven-wire serial interfaces. The chapter concludes with detailed descriptions of operation and the programming model.

11.1 Overview

The MCF5272's integrated fast Ethernet media access controller (MAC) performs the full set of IEEE 802.3/Ethernet CSMA/CD media access control and channel interface functions. It requires an external interface adaptor and transceiver function to complete the interface to the media.

11.1.1 Features

The fast Ethernet controller (FEC) incorporates the following features:

- Full compliance with the IEEE 802.3 standard
- Support for three different physical interfaces:
  - 100 Mbps 802.3 media independent interface (MII)
  - 10 Mbps 802.3 MII
  - 10 Mbps seven-wire interface
- Half-duplex 100-Mbps operation at system clock frequency Š 50 MHz
- 448 bytes total on-chip transmit and receive FIFO memory to support a range of bus latencies
  Note: the total FIFO size is 448 bytes. It is not intended to hold entire frames but only to compensate for external bus latency. The FIFO can be partitioned on any 32-bit boundary between receive and transmit, for example, 32 x 56 receive and 32 x 56 transmit.
- Retransmission from transmit FIFO following a collision, no processor bus used
- Automatic internal flushing of the receive FIFO for runts and collisions with no processor bus use

11.2 Module Operation

The FEC is implemented using a combination of hardware and microcode. Figure 11-1 shows a functional block diagram of this module.

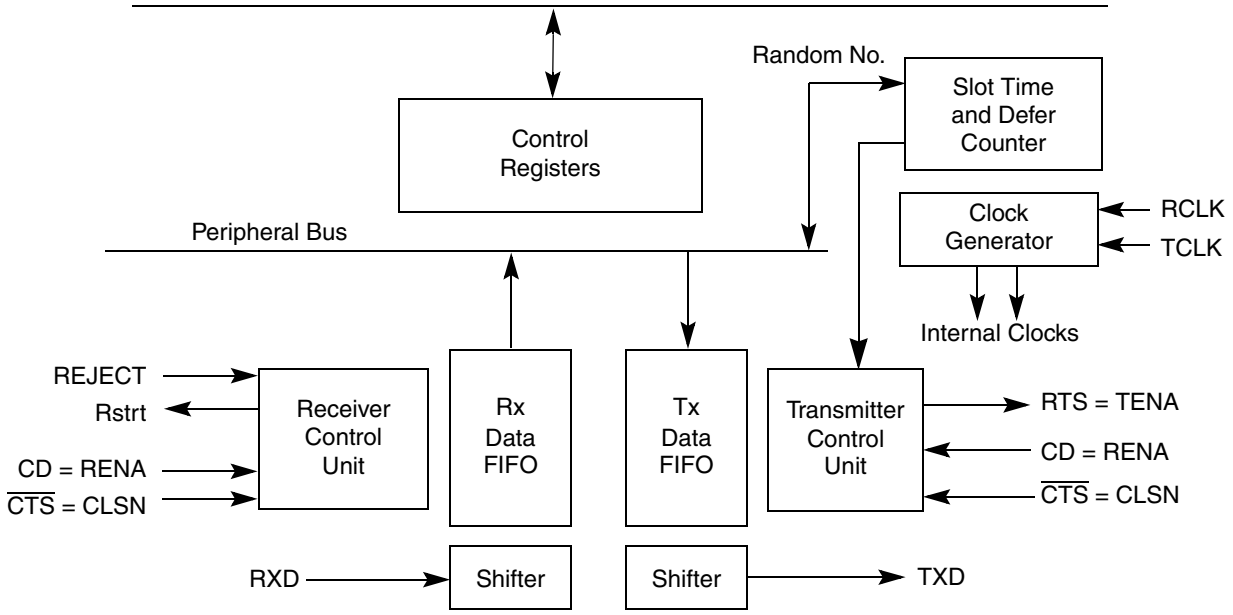

Figure 11-1. Ethernet Block Diagram

Figure 11-2 shows a fast Ethernet module.

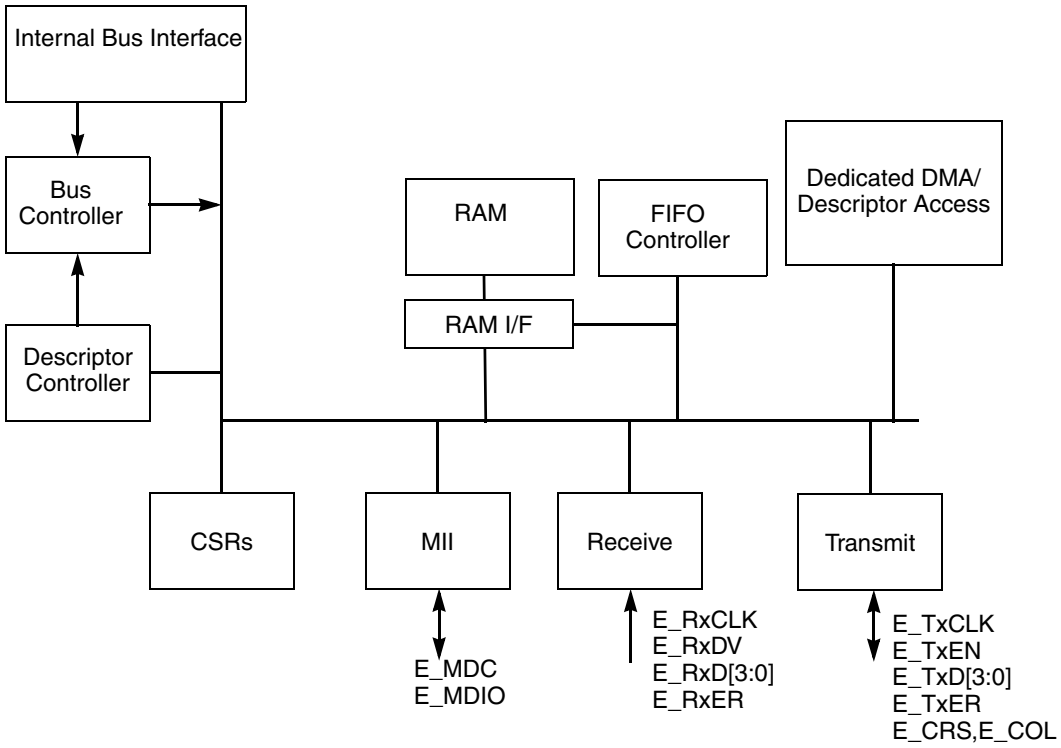

Figure 11-2. Fast Ethernet Module Block Diagram

The descriptor controller opens and closes the buffer descriptors. The DMA controller manages the data transfer. As soon as the DMA channel is initialized, it begins transferring data. An on-board RAM acts as both a transmit and receive FIFO, and also provides scratch memory for the FEC.

The RAM is the focal point of all data flow in the FEC. The RAM is divided into three sections: transmit FIFO, receive FIFO, and descriptor controller memory. User data flows to or from the DMA unit from or to the receive/transmit FIFOs. Transmit data flows from the transmit FIFO into the transmit block. Receive data flows from the receive block into the receive FIFO.

The user controls the FEC by writing into control registers located in each block. The control and status registers (CSRs) provide global control (for example, Ethernet reset and enable) and interrupt handling. The MII block provides a serial channel for the FEC and external physical layer device to pass control and status information.

The descriptor controller manages data flow in both transmit and receive directions. It is programmed with microcode to open and close buffer descriptors, control the transmit collision recovery process, and filter received frame addresses.

The descriptor controller accesses both the transmit and receive descriptor rings through the descriptor access block. The descriptor access block acts as a dedicated single channel DMA that either reads a descriptor in external user memory or writes an updated descriptor back into user memory.

11.3 Transceiver Connection

The FEC supports both an MII interface for 10/100 Mbps Ethernet and a seven-wire serial interface for 10 Mbps Ethernet. The interface mode is selected by RCR[MII_MODE]. In MII mode, the 802.3 standard defines and the FEC module supports 18 signals. These are shown in Table 11-1.

Table 11-1. MII Mode

Signal Description	MCF5272 Pin
Transmit clock	E_TxCLK
Transmit enable	E_TxEN
Transmit data	E_TxD[3:0]
Transmit error	E_TxER
Collision	E_COL
Carrier sense	E_CRS
Receive clock	E_RxCLK
Receive enable	E_RxDV
Receive data	E_RxD[3:0]
Receive error	E_RxER
Management channel clock	E_MDC
Management channel serial data	E_MDIO

The serial mode interface operates in what is generally referred to as AMD mode. The MCF5272 configuration for seven-wire serial mode connections to the external transceiver are shown in Table 11-2.

Table 11-2. Seven-Wire Mode Configuration

Signal Description	MCF5272 Pin
Transmit clock	E_TxCLK
Transmit enable	E_TxEN
Transmit data	E_TxD[0]
Collision	E_COL
Receive clock	E_RxCLK
Receive enable	E_RxDV
Receive data	E_RxD[0]
Unused, configure as PB14	E_RxER
Unused input, tie to ground	E_CRS
Unused, configure as PB[13:11]	E_RxD[3:1]
Unused output, ignore	E_TxER
Unused, configure as PB[10:8]	E_TxD[3:1]
Unused, configure as PB15	E_MDC
Input after reset, connect to ground	E_MDIO

11.4 FEC Frame Transmission

Figure 11-3 shows the Ethernet frame format.

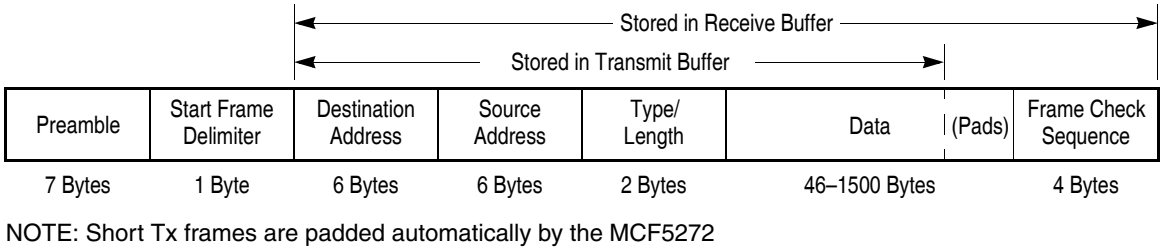

NOTE: Short Tx frames are padded automatically by the MCF5272

Figure 11-3. Ethernet Frame Format

The Ethernet transmitter is designed to work with almost no host intervention. As soon as the driver enables the FEC transmitter by setting ECR[ETHER_EN] and TDAR[24], the FEC fetches the first transmit buffer descriptor (TxBD). If the user has a frame ready to transmit, DMA of the transmit data buffer(s) begins immediately. A collision window (512 bits) of transmit data is sent as a DMA to the transmit FIFO before off-chip transmission begins.

When the transmit FIFO contains 512 bits of data, the FEC asserts E_TxEN and starts transmitting the preamble sequence, the start-of-frame delimiter, and then the frame data. However, if the line is busy, the controller defers the transmission (carrier sense is active). Before transmitting, the controller waits for carrier sense to become inactive. When carrier sense goes inactive, the controller waits to verify that it

stays inactive for 60 bit times. If so, the transmission begins after waiting an additional 36 bit times (96 bit times after carrier sense originally went inactive).

If a collision occurs during the transmit frame, the FEC follows the specified backoff procedures and attempts to retransmit the frame until the retry limit is reached. The FEC stores the first 64 bytes of the transmit frame in internal RAM, so they need not be retrieved from system memory in case of a collision. This improves external bus use and reduces latency whenever the backoff process results in an immediate retransmission.

See Figure 11-28 on page 11-37 for the following discussion. When the end of the last transmit buffer in the current frame is reached, the 32-bit frame check sum is appended (if TxBD[TC] is set) and transmission is disabled (E_TxEN is negated). Following the transmission of the check sum, the FEC writes the frame status bits into the buffer descriptor and clears the ready bit. When the end of the current BD is reached but it is not the last buffer in the frame, then only the ready bit is cleared. Short frames are automatically padded by the transmit logic.

If the transmit frame length exceeds the value programmed in the maximum frame length register, the BABT interrupt is asserted. However, the entire frame is transmitted and is not truncated. See Section 11.5.14, “Maximum Frame Length Register (MFLR).”

Both buffer and frame interrupts may be generated as determined by the EIMR register settings.

Setting the graceful transmit stop bit, TCR[GTS], pauses transmission. The FEC transmitter stops immediately if no transmission is in progress. Otherwise it continues transmission until the current frame finishes normally or terminates with a collision. When TCR[GTS] is cleared, the FEC resumes transmission with the next frame.

The FEC transmits bytes lsb first.

11.4.1 FEC Frame Reception

The FEC receiver is designed to work with almost no intervention from the host and can perform address recognition, CRC, short frame checking, and maximum frame length checking.

When the FEC receiver is enabled by setting ECR[ETHER_EN] and RDAR[24] it immediately starts processing receive frames. Received frame processing proceeds as follows:

- When E_RxDV asserts, the receiver first checks for a valid header comprised of a preamble and start-of-frame delimiter (PA/SDF).
- If the PA/SFD is valid, it is stripped off and the frame processed further by the receiver. If a valid PA/SFD is not found, the frame is ignored.
- In serial mode, the first 16 bit times of E_RxD0 following assertion of E_RxDV (RENA) are ignored.
- After the first 16 bit times, the data sequence is checked for alternating I/0.
- If a 11 or 00 data sequence is detected during bit times 17 to 21, the remainder of the frame is ignored.
- After bit time 21, the data sequence is monitored for a valid start-of-frame delimiter (SFD) of 11. If a 00 is detected, the frame is rejected. When a 11 is detected, the PA/SFD sequence is complete.

- In MII mode, the receiver checks for at least one byte matching the SFD. Zero or more PA bytes may occur, but if a 00 bit sequence is detected before the SFD byte, the frame is ignored.
- After the first 8 bytes of the frame have been passed to the receive FIFO, the FEC performs address recognition on the frame.

As soon as a collision window (512 bits) of data is received, and if address recognition has not rejected the frame, the FEC starts transferring the incoming frame to the receive buffer descriptor's (RxBD's) associated data buffer. If the frame is a runt (due to collision) or is rejected by address recognition, no receive buffers are filled. Thus, no collision frames are presented to the user except late collisions, which indicate serious LAN problems. When the data buffer has been filled, the FEC clears RxBD[E] and generates an RXB interrupt (if RBIEN is asserted in EIMR register). If the incoming frame exceeds the length of the data buffer, the FEC fetches the next RxBD in the table and, if it is empty, continues transferring the rest of the frame to this BD's associated data buffer.

The RxBD length is determined in the R_BUFF_SIZE value in the EMRBR register. The user should program R_BUFF_SIZE to be at least 128 bytes. R_BUFF_SIZE must be quad-word (16-byte) aligned.

During reception, the FEC checks for a frame that is either too short or too long. When the frame ends (carrier sense is negated), the receive CRC field is checked and written to the data buffer. The data length written to the last BD in the Ethernet frame is the length of the entire frame. Frames shorter than 64 bytes are discarded automatically with no system bus impact.

When the receive frame is complete, the FEC sets RxBD[L], writes the other frame status bits into the RxBD and clears RxBD[E]. The FEC next generates a maskable interrupt (EIR[RFINT], maskable by EIMR[RFIEN]), indicating that a frame has been received and is in memory. The FEC then waits for a new frame. The FEC receives serial data lsb first.

11.4.2 CAM Interface

In addition to the FEC address recognition logic, an external CAM may be used for frame reject with no additional pins other than those in the MII interface. This CAM interface is documented in an application note titled "Using Freescale's Fast Static RAM CAMs with the MPC860T's Media Independent Interface," located at the following URL: http://www.freescale.com.

11.4.3 Ethernet Address Recognition

The FEC filters the received frames based on the type of destination media access controller address (hardware address). There are three destination address (DA) types:

- Individual (unicast)
- Group (multicast)
- Broadcast (all-ones group address)

The difference between an individual address and a group address is determined by the I/G bit in the destination address field. A flowchart for address recognition on received frames is illustrated in Figure 11-4 and summarized in Table 11-3.

Table 11-3. Ethernet Address Recognition

Destination Address Type	FEC Address Processing
individual	The FEC compares the destination address field of the received frame with the 48-bit MAC address programmed into MALR and MAUR.
group	The FEC determines whether or not the group address is a broadcast address. If not broadcast, a hash table lookup is performed using the 64-entry hash table defined in HTLR and HTUR.
broadcast	The frame is accepted unconditionally.

In promiscuous mode (PROM = 1 in RCR), the FEC receives all of the incoming frames regardless of their address. In this mode, the destination address lookup is still performed and RxBD[MISS] is set accordingly. If address recognition did not achieve a match, the frame is received with RxBD[MISS] set. If address recognition achieves a match, the frame is received without setting RxBD[MISS].

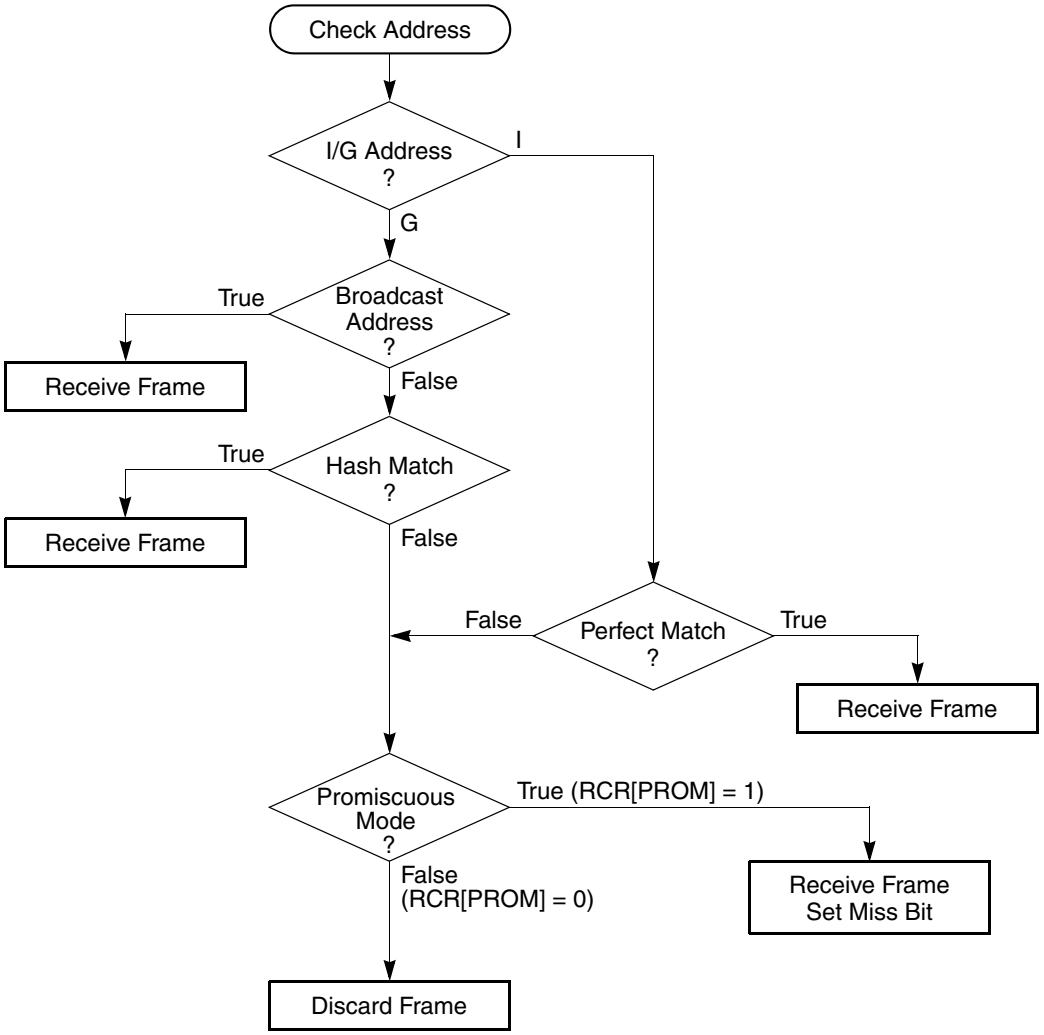

Figure 11-4. Ethernet Address Recognition Flowchart

11.4.4 Hash Table Algorithm

The hash table process used in the group hash filtering operates as follows. When a frame with the destination address I/G bit set is received by the FEC, the 48-bit destination media access control (MAC) address is mapped into one of 64 bins, which are represented by 64 bits stored in HTLR and HTUR. This is performed by passing the 48-bit MAC address through the on-chip 32-bit CRC generator and selecting 6 bits of the CRC-encoded result to generate a number between 0 and 63. Bit 31 of the CRC result selects HTUR (bit 31 = 1) or HTLR (bit 31 = 0). Bits 30–26 of the CRC result select the bit within the selected register. If the CRC generator selects a bit that is set in the hash table, the frame is accepted; otherwise, it is rejected. The result is that if eight group addresses are stored in the hash table and random group addresses are received, the hash table prevents roughly 56/64 (or 87.5%) of the group address frames from reaching memory. Those that do reach memory must be further filtered by the processor to determine if they truly contain one of the eight preferred addresses.

The effectiveness of the hash table declines as the number of addresses increases.

The hash table registers must be initialized by the user. The CRC32 polynomial to use in computing the hash is as follows:

$$X^{32} + X^{26} + X^{23} + X^{22} + X^{16} + X^{12} + X^{11} + X^{10} + X^{8} + X^{7} + X^{5} + X^{4} + X^{2} + X + 1$$

11.4.5 Interpacket Gap Time

The minimum interpacket gap time for back-to-back transmission is 96 bit times. After completing a transmission or after the backoff algorithm completes, the transmitter waits for carrier sense to negate before starting its interpacket gap time counter. Frame transmission may begin 96 bit times after carrier sense is negated if it stays negated for at least 60 bit times. If carrier sense asserts during the last 36 bit times, it is ignored and a collision will occur.

The receiver receives back-to-back frames separated by at least 28 bit times. If an interpacket gap between receive frames is less than 28 bit times, the following frame may be discarded by the receiver.

11.4.6 Collision Handling

If a collision occurs during transmission, the FEC continues transmitting for at least 32 bit times, sending a JAM pattern of 32 ones. The JAM pattern follows the preamble sequence if the collision occurs during preamble.

If a collision occurs within 64 byte times, the retry process is initiated. The transmitter waits a random number of slot times. A slot time is 512 bit times. If a collision occurs after 64 byte times, no retransmission is performed and the end-of-frame buffer is closed with an LC error indication.

11.4.7 Internal and External Loopback

Both internal and external loopback are supported by the FEC. In loopback mode, both of the FIFOs are used and the FEC actually operates in a full-duplex fashion. Both internal and external loopback are configured using combinations of RCR[LOOP].

For internal loopback, set LOOP and clear DRT. E_TxEN and E_TxER cannot assert during internal loopback.

For external loopback, clear LOOP, set DRT, and configure the external transceiver for loopback.

11.4.8 Ethernet Error-Handling Procedure

The FEC reports frame reception and transmission error conditions through the buffer descriptors and the EIR register.

11.4.8.1 Transmission Errors

Transmission errors are defined in Table 11-4.

Table 11-4. Transmission Errors

Error	Description
Transmitter Underrun	The FEC sends 32 bits that ensure a CRC error and stops transmitting. All remaining buffers for that frame are then flushed and closed, with the UN bit set in the last TxBD for that frame. The FEC continues to the next TxBD and begins transmitting the next frame.
Carrier Sense Lost during Frame Transmission	When this error occurs and no collision is detected in the frame, the FEC sets the CSL bit in the last TxBD for this frame. The frame is sent normally. No retries are performed as a result of this error. The CSL bit is not set if TCR[FDEN] = 1, regardless of the state of CRS.
Retransmission Attempts Limit Expired	When this error occurs, the FEC terminates transmission. All remaining buffers for that frame are then flushed and closed, with the RL bit set in the last TxBD for that frame. The FEC then continues to the next TxBD and begins sending the next frame.
Late Collision[1]	The FEC stops sending. All remaining buffers for that frame are then flushed and closed, with the LC bit set in the last TxBD for that frame. The FEC then continues to the next TxBD and begins sending the next frame.
Heartbeat	Some transceivers have a self-test feature called heartbeat or signal-quality error. To signify a good self-test, the transceiver indicates a collision within 20 clocks after the FEC sends a frame. This heartbeat condition does not imply a real collision, but that the transceiver seems to be functioning properly. If TCR[HBC] is set and the heartbeat condition is not detected by the FEC after a frame transmission, then a heartbeat error occurs. When this error occurs, the FEC closes the buffer, sets the HB bit in the Tx BD, and generates the HBERR interrupt if it is enabled.

[1] The definition of what constitutes a late collision is hard-wired in the FEC.

11.4.8.2 Reception Errors

Table 11-5 describes reception errors.

Table 11-5. Reception Errors

Error	Description
Overrun Error	The FEC maintains an internal FIFO for receiving data. If a receiver FIFO overrun occurs, the FEC closes the buffer and sets RxBD[OV].
Non-Octet Error (Dribbling Bits)	The FEC handles up to seven dribbling bits when the receive frame terminates non-octet aligned and it checks the CRC of the frame on the last octet boundary. If there is a CRC error, the frame non-octet aligned (NO) error is reported in the RxBD. If there is no CRC error, no error is reported.
CRC Error	When a CRC error occurs with no dribbling bits, the FEC closes the buffer and sets RxBD[CR]. CRC checking cannot be disabled, but the CRC error can be ignored if checking is not required.
Frame Length Violation	When the receive frame length exceeds R_HASH[MAX_FRAME_LENGTH], EIR[BABR] is set indicating babbling receive error, and the LG bit in the end of frame RxBD is set. Note: Receive frames exceeding 2047 bytes are truncated.

11.5 Programming Model

This section gives an overview of the registers, followed by a description of the buffers.

The FEC is programmed by a combination of control/status registers (CSRs) and buffer descriptors. The CSRs are used for mode control and to extract global status information. The descriptors are used to pass data buffers and related buffer information between the hardware and software.

Table 11-6 shows the FEC register memory map with each register address, name, and a brief description.

Table 11-6. FEC Register Memory Map

Offset	Name	Width	Description
0x840	ECR	32	Ethernet control register, [p. 11-11]
0x844	EIR	32	Interrupt event register, [p. 11-12]
0x848	EIMR	32	Interrupt mask register, [p. 11-13]
0x84C	IVSR	32	Interrupt vector status register, [p. 11-14]
0x850	RDAR	32	Receive descriptor active register, [p. 11-15]
0x854	TDAR	32	Transmit descriptor active register, [p. 11-16]
0x880	MMFR	32	MII management frame register, [p. 11-17]
0x884	MSCR	32	MII speed control register, [p. 11-18]
0x8CC	FRBR	32	FIFO receive bound register, [p. 11-19]
0x8D0	FRSR	32	FIFO receive start register, [p. 11-20]
0x8EC	TFSR	32	FIFO transmit start register, [p. 11-22]
0x8E4	TFWR	32	Transmit FIFO watermark, [p. 11-21]
0x944	RCR	32	Receive control register, [p. 11-23]
0x948	MFLR	32	Maximum frame length register, [p. 11-24]
0x984	TCR	32	Transmit control register, [p. 11-25]
0xC00	MALR	32	Lower 32-bits of MAC address
0xC04	MAUR	32	Upper 16-bits of MAC address
0xC08	HTUR	32	Upper 32-bits of hash table, [p. 11-28]
0xC0C	HTLR	32	Lower 32-bits of hash table, [p. 11-29]
0xC10	ERDSR	32	Pointer to receive descriptor ring, [p. 11-30]
0xC14	ETDSR	32	Pointer to transmit descriptor ring, [p. 11-31]
0xC18	EMRBR	32	Maximum receive buffer size, [p. 11-32]
0xC40–0xDFF	EFIFO	32	FIFO RAM space

The following sections describe each register in detail.

11.5.1 Ethernet Control Register (ECR)

The ECR register, Figure 11-5, is used to enable/disable the FEC. It is written by the user and cleared at system reset.

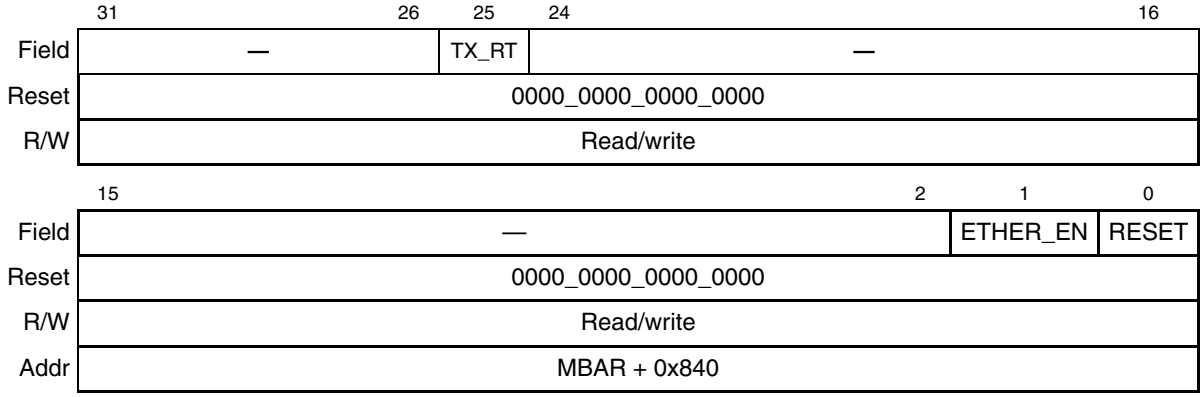

Figure 11-5. Ethernet Control Register (ECR)

Table 11-7. ECR Field Descriptions

Bits	Name	Description
31–26	—	Reserved, should be cleared.
25	TX_RT	Transmit retime. 0 Normal operation, seven-wire serial mode. 1 The transmit output signals (E_TxD[3:0], E_TxEN, and E_TxER) are delayed by one-half of a E_TxCLK period. This bit should be set to provide compatibility with transceivers that have hold time requirements that exceed the MII specification.
24–2	—	Reserved, should be cleared.
1	ETHER_EN	Ethernet enable. When this bit is set, the FEC is enabled, and reception and transmission is possible. When this bit is cleared, reception is immediately stopped and transmission is stopped after a bad CRC is appended to any frame currently being transmitted. The buffer descriptor(s) for an aborted transmit frame are not updated following deassertion of ETHER_EN. When ETHER_EN is deasserted, the DMA, buffer descriptor, and FIFO control logic are reset, including FIFO pointers.
0	RESET	Ethernet controller reset. When this bit is set, the equivalent of a hardware reset is performed but it is local to the FEC. ETHER_EN is cleared and all other FEC registers take their reset values. Also, any transmission/reception currently in progress is abruptly aborted. This bit is automatically cleared by hardware once the reset sequence is complete (approximately 16 clock cycles after being set).

11.5.2 Interrupt Event Register (EIR)

An event that sets a bit in EIR generates an interrupt if the corresponding bit in the interrupt mask register (EIMR) is set. Bits in the interrupt event register are cleared when a one is written to them. Writing a zero has no effect.

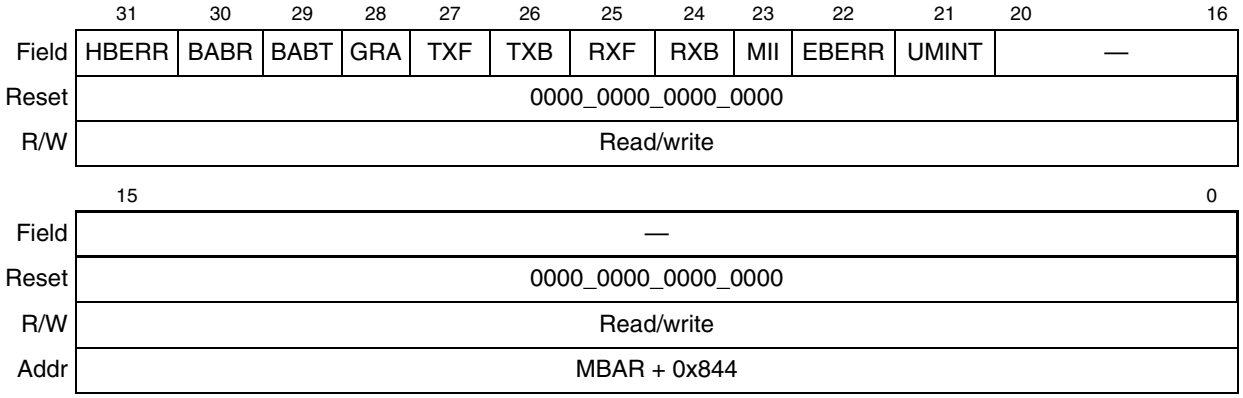

Figure 11-6. Interrupt Event Register (EIR)

Table 11-8. EIR Field Descriptions

Bits	Name	Description
31	HBERR	Heartbeat error. A heartbeat was not detected within the heartbeat window following a transmission.
30	BABR	Babbling receive error. A frame was received with length in excess of MAX_FL bytes.
29	BABT	Babbling transmit error. The transmitted frame length has exceeded MAX_FL bytes. This condition is usually caused by a frame that is too long being placed into the transmit data buffer(s). Truncation does not occur.
28	GRA	Graceful stop complete. A graceful stop, which was initiated by setting X_CTRL[GTS], is now complete. This bit is set as soon as the transmitter has finished transmitting any frame that was in progress when GTS was set.
27	TXF	Transmit frame interrupt. A frame has been transmitted and that the last corresponding buffer descriptor has been updated.
26	TXB	Transmit buffer interrupt. A transmit buffer descriptor has been updated.
25	RXF	Receive frame interrupt. A frame has been received and the last corresponding buffer descriptor has been updated.
24	RXB	Receive buffer interrupt. A receive buffer descriptor has been updated.
23	MII	MII interrupt. The MII has completed the data transfer requested.
22	EBERR	FEC bus error. A bus error occurred when the FEC was accessing an internal bus.
21	UMINT	Unmasked interrupt status. An interrupt is currently being asserted to the interrupt controller. This bit is not maskable.
20–0	—	Reserved, should be cleared.

11.5.3 Interrupt Mask Register (EIMR)

The EIMR register provides control over which possible interrupt events are allowed to actually cause an interrupt.This register is cleared upon a hardware reset.

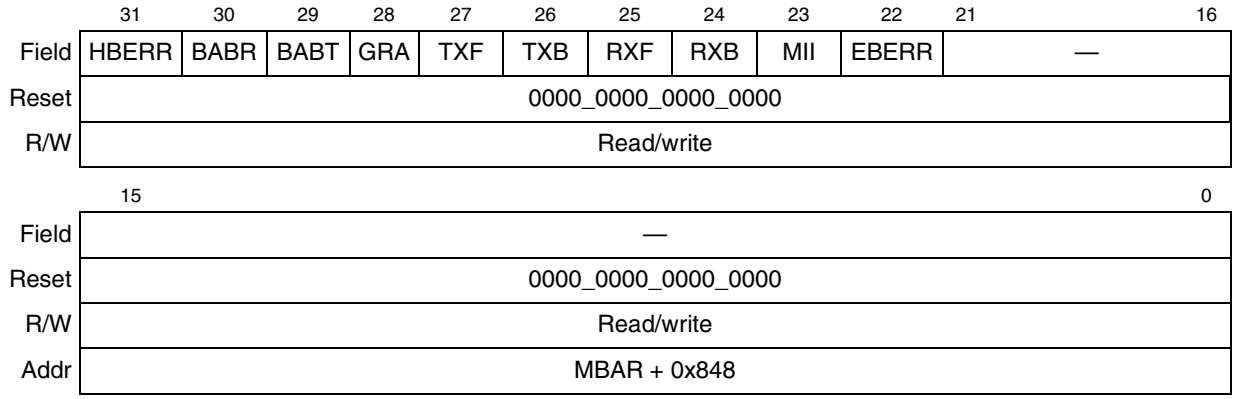

	31	30	29	28	27	26	25	24	23	22	21–16
Field	HBERR	BABR	BABT	GRA	TXF	TXB	RXF	RXB	MII	EBERR	—
Reset	0000_0000_0000_0000										
R/W	Read/write										

	15–0
Field	—
Reset	0000_0000_0000_0000
R/W	Read/write
Addr	MBAR + 0x848

Figure 11-7. Interrupt Mask Register (EIMR)

Table 11-9. EIMR Register Field Descriptions

Bits	Name	Description
31–22	See Figure 11-7	Interrupt mask. Each bit corresponds to an interrupt source defined by the EIR register. The corresponding EIMR bit determines whether an interrupt condition can generate an interrupt. At every clock, the EIR samples the signal generated by the interrupting source. The corresponding EIR bit reflects the state of the interrupt signal even if the corresponding EIMR bit is set. 0 The corresponding interrupt source is masked . 1 The corresponding interrupt source is not masked.
21–0	—	Reserved, should be cleared.

11.5.4 Interrupt Vector Status Register (IVSR)

The IVSR register gives status indicating the class of interrupt being generated by the FEC. Interrupt level control is provided in the interrupt control registers of the SIMBC.

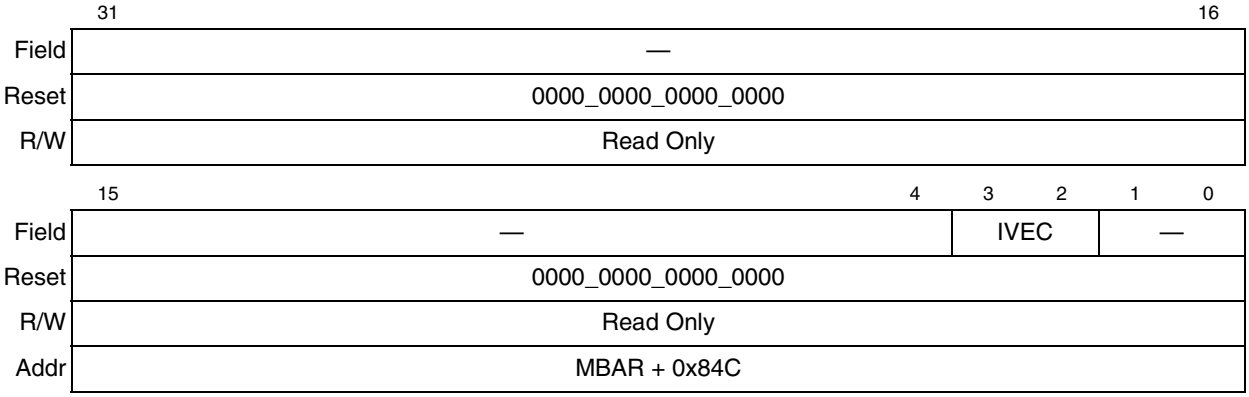

Figure 11-8. Interrupt Vector Status Register (IVSR)

Table 11-10. IVSR Field Descriptions

Bit	Name	Description
31–4	—	Reserved, should be cleared.
3–2	IVEC	Interrupt vector. IVEC gives the highest outstanding priority FEC interrupt. The bit field meanings (from low priority to high priority) are as follows: 00 No pending FEC interrupt 01 Non-time critical interrupt (All interrupts except TXB, TXF, RXB, and RXF.) 10 Transmit interrupt 11 Receive interrupt
1–0	—	Reserved, should be cleared.

11.5.5 Receive Descriptor Active Register (RDAR)

The RDAR register, Figure 11-9, is a command register that should be written by the user to indicate that the receive descriptor ring has been updated (empty receive buffers have been produced by the driver with the E bit set).

The R_DES_ACTIVE bit is set whenever the register is written. This is independent of the data actually written by the user. When set, the FEC polls the receive descriptor ring and processes receive frames (provided ETHER_EN is also set). As soon as the FEC polls a receive descriptor whose E bit is not set, it clears the R_DES_ACTIVE bit and stops polling the receive descriptor ring.

The RDAR register is cleared at reset and when ETHER_EN is cleared.

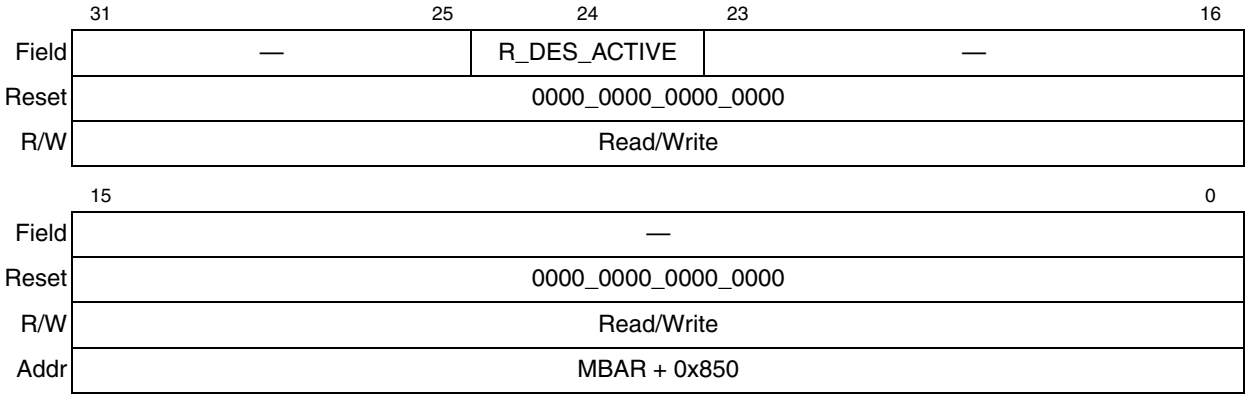

Figure 11-9. Receive Descriptor Active Register (RDAR)

Table 11-11 describes the RDAR fields.

Table 11-11. RDAR Register Field Descriptions

Bit	Name	Description
31–25	—	Reserved, should be cleared.
24	R_DES_ACTIVE	Set when this register is written, regardless of the value written. Cleared by the FEC whenever no additional empty descriptors remain in the receive ring.
23–0	—	Reserved, should be cleared.

11.5.6 Transmit Descriptor Active Register (TDAR)

The TDAR register, Figure 11-10, is a command register which should be set by the user to indicate that the transmit descriptor ring has been updated, that is, transmit buffers have been defined by the driver with the ready bit set in the buffer descriptor.

The X_DES_ACTIVE bit is set whenever the register is written. This is independent of the data actually written by the user. When TDAR is set, the FEC polls the transmit descriptor ring and processes transmit frames (provided ETHER_EN is also set). As soon as the FEC polls a transmit descriptor whose ready bit is not set, it clears the X_DES_ACTIVE bit and stops polling the transmit descriptor ring.

The TDAR register is cleared at reset and when ETHER_EN is cleared. Figure 11-10 describes this register.

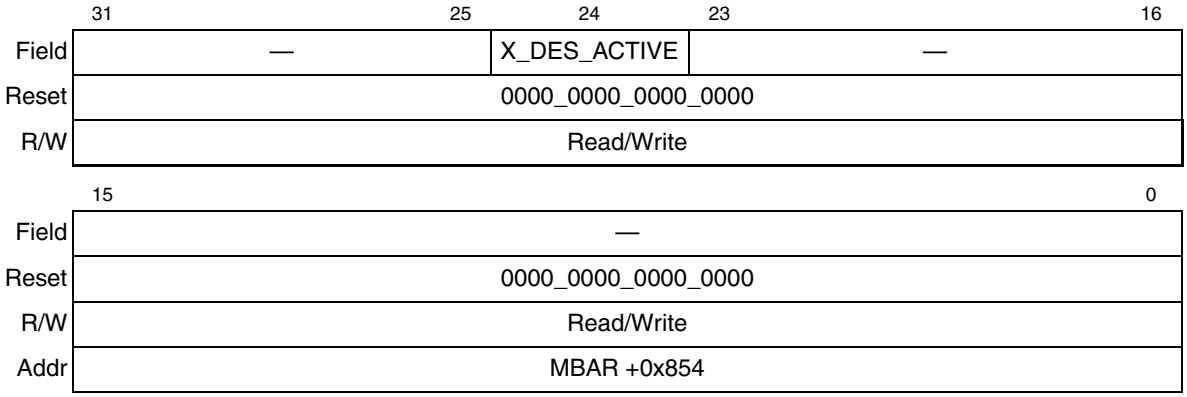

Figure 11-10. Transmit Descriptor Active Register (TDAR)

Table 11-12 describes the TDAR fields.

Table 11-12. TDAR Field Descriptions

Bits	Name	Description
31–25	—	Reserved, should be cleared.
24	X_DES_ACTIVE	Set to one when this register is written, regardless of the value written. Cleared by the FEC whenever no additional ready descriptors remain in the transmit ring.
23–0	—	Reserved, should be cleared.

11.5.7 MII Management Frame Register (MMFR)

The MMFR register, Figure 11-11, is used to communicate with the attached MII compatible PHY device(s), providing read/write access to their MII registers. Performing a write to the MMFR register causes a management frame to be sourced, unless the MSCR register has been programmed to 0. In the case of writing to MMFR when MSCR = 0, if the MSCR register is then written to a non-zero value, an MII frame is generated with the data previously written to MMFR. This allows MMFR and MSCR to be programmed in either order if MSCR is currently zero.

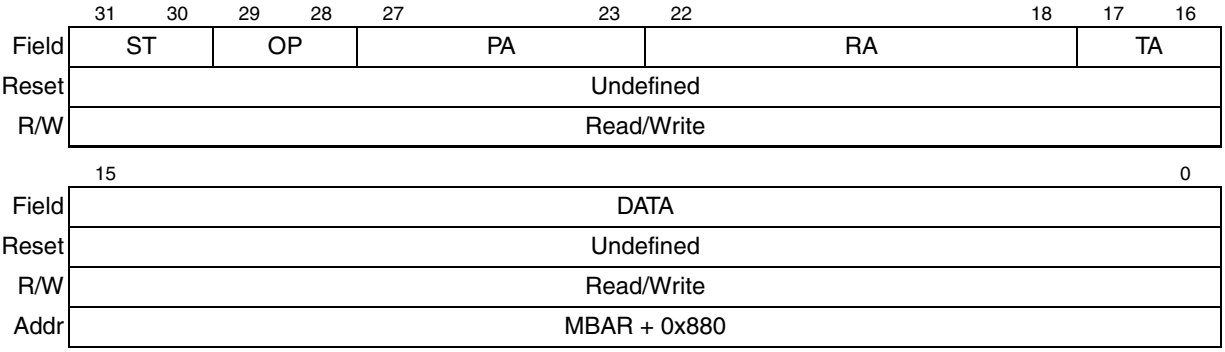

Figure 11-11. MII Management Frame Register (MMFR)

Table 11-13 describes the MMFR fields.

Table 11-13. MMFR Field Descriptions

Bits	Name	Description
31–30	ST	Start of frame delimiter. Must be programmed to 01 for a valid MII management frame
29–28	OP	Operation code. This field must be programmed to 10 (read) or 01(write) to generate a valid MII management frame. A value of 11 produces a read frame operation while a value of 00 produces a write frame operation, but these frames are not MII-compliant.
27–23	PA	PHY address. Specifies one of up to 32 attached PHY devices
22–18	RA	Register address. Specifies one of up to 32 registers within the specified PHY device
17–16	TA	Turn around. Must be programmed to 10 to generate a valid MII management frame.
15–0	DATA	Management frame data. Field for data to be written to or read from PHY register

To perform a read or write operation on the MII management interface, the MMFR register is written by the user. To generate a valid read or write management frame, the ST field must be written with a 01 pattern, the OP field must be written with a 01 (management register write frame) or 10 (management register read frame), and the TA field must be written with a 10. If other patterns are written to these fields, a frame is generated but will not comply with the IEEE 802.3 MII definition. OP field = 1x produces a read-frame operation, while OP = 0x produces a write-frame operation.

To generate an 802.3-compliant MII management interface write frame (write to a PHY register), the user must write {01 01 PHYAD REGAD 10 DATA} to the MMFR register. Writing this pattern causes the control logic to shift out the data in the MMFR register following a preamble generated by the control state machine. The contents of MMFR are altered as the contents are serially shifted, and are unpredictable if read by the user. Once the write management frame operation completes, the MII interrupt is generated. At this time, the contents of the MMFR register match the original value written.

To generate an MII management interface read frame (read a PHY register), the user must write {01 10 PHYAD REGAD 10 XXXX} to MMFR (the contents of the DATA field are a don't care). Writing this pattern causes the control logic to shift out the data in the MMFR register following a preamble generated by the control state machine.The contents of the MMFR register are altered as the contents are serially shifted, and are unpredictable if read by the user. Once the read management frame operation completes, the MII interrupt is generated. At this time the contents of the MMFR register matches the original value written except for the DATA field, whose contents are replaced by the value read from the PHY register.

If the MMFR register is written while frame generation is in progress, the frame contents are altered. Software should use the MII interrupt to avoid writing to the MMFR register while frame generation is in progress.

11.5.8 MII Speed Control Register (MSCR)

The MSCR register, Figure 11-12, provides control of the MII clock (E_MDC pin) frequency, allows dropping the preamble on the MII management frame and provides observability (intended for manufacturing test) of an internal counter used in generating the E_MDC clock signal.

	31															16
Field	—															
Reset	0000_0000_0000_0000															
R/W	Read/Write															

	15							8	7	6						1	0
Field	—								DIS_PREAMBLE	MII_SPEED							—
Reset	0000_0000								0	000_000							0
R/W	Read/Write																
Addr	MBAR + 0x884																

Figure 11-12. MII Speed Control Register (MSCR)

Table 11-14 describes the MSCR fields.

Table 11-14. MSCR Field Descriptions

Bits	Name	Description
31–8	—	Reserved, should be cleared.
7	DIS_PREAMBLE	Disable preamble. Asserting this bit causes the preamble of 32 consecutive 1's not to be prepended to the MII management frame. The MII standard allows the preamble to be dropped if the attached PHY device(s) do not require it.
6–1	MII_SPEED	MII frequency divider. MII_SPEED controls the frequency of the MII management interface clock (E_MDC) relative to system clock. A value of 0 in this field turns off the E_MDC and leaves it in low-voltage state. Any non-zero value results in an E_MDC frequency given by the following formula: MDC_FREQUENCY = system frequency / (4 * MII_SPEED)
0	—	Reserved, should be cleared.

The MII_SPEED field must be programmed with a value to provide an E_MDC frequency of less than or equal to 2.5 MHz to be compliant with the IEEE MII specification. The MII_SPEED must be set to a non-zero value in order to source a read or write management frame. After the management frame is complete, the MSCR register may optionally be set to zero to turn off the E_MDC. The E_MDC generated will have a 50% duty cycle except when MII_SPEED is changed during operation. Change will take effect following either a rising or falling edge of E_MDC.

If the system clock is 50 MHz, programming this register to 0x0000_000A results in an E_MDC frequency of 25 MHz * 1/10 = 2.5 MHz. Table 11-15 shows optimum values for MII_SPEED as a function of system clock frequency.

Table 11-15. Programming Examples for MSCR Register

System Clock Frequency	[MII_SPEED]	E_MDC frequency
25 MHz	0x3	2.08 MHz
33 MHz	0x4	2.06 MHz
50 MHz	0x5	2.5 MHz
66 MHz	0x7	2.36 MHz

11.5.9 FIFO Receive Bound Register (FRBR)

FRBR is a read-only register used to determine the upper address boundary of the FIFO RAM. Drivers can use this value, along with the registers FRSR and TFSR, to appropriately divide the available FIFO RAM between the transmit and receive data paths. The value in this register must be added to MBAR + 0x800 to determine the absolute address.

	31 — 16
Field	—
Reset	0000_0000_0000_0000
R/W	Read only

	15 — 11	10 — 2	1 — 0
Field	—	R_BOUND	—
Reset	0000_0	110_0000_00	00
R/W	Read only		
Addr	MBAR + 0x884		

Figure 11-13. FIFO Receive Bound Register (FRBR)

Table 11-16 describes the FRBR fields.

Table 11-16. FRBR Field Descriptions

Bits	Name	Description
31–11	—	Reserved, should be cleared.
10–2	R_BOUND	End of FIFO RAM. This field contains the ending address of the FIFO RAM, exclusive.
1–0	—	Reserved, should be cleared.

11.5.10 FIFO Receive Start Register (FRSR)

The FRSR register, Figure 11-14, is programmed by the user to indicate the starting address of the receive FIFO. FRSR marks the boundary between the transmit and receive FIFOs. The transmit FIFO uses addresses from TFSR to FRSR - 4. The receive FIFO uses addresses from FRSR to FRBR - 4. The value in this register must be added to MBAR + 0x800 to determine the absolute address.

FRSR needs to be written only to change the default value.

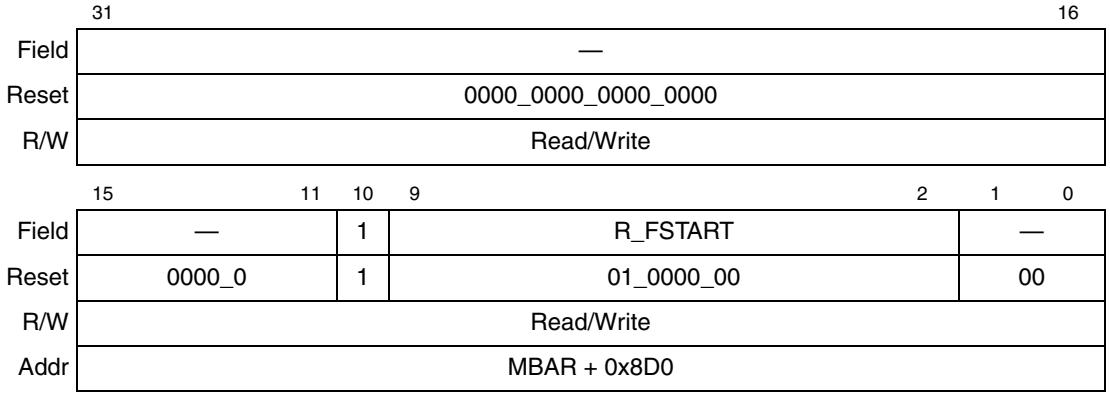

Figure 11-14. FIFO Receive Start Register (FRSR)

Table 11-17 describes the FRSR fields.

Table 11-17. FRSR Field Descriptions

Bits	Name	Description
31–11	—	Reserved, should be cleared.
10	1	Reserved, should be set.
9–2	R_FSTART	Receive FIFO starting address. Address of first receive FIFO location. Acts as delimiter between receive and transmit FIFOs.
1–0	—	Reserved, should be cleared.

11.5.11 Transmit FIFO Watermark (TFWR)

The TFWR register, shown in Figure 11-15, controls the amount of data required in the transmit FIFO before transmission of a frame can begin. Setting TFWR to larger values reduces the risk of transmit FIFO underrun due to system bus latency.

	31	16
Field	—	
Reset	0000_0000_0000_0000	
R/W	Read/Write	

	15	2	1	0
Field	—		X_WMRK	
Reset	0000_0000_0000_00		00	
R/W	Read/Write			
Addr	MBAR + 0x8E4			

Figure 11-15. Transmit FIFO Watermark (TFWR)

Table 11-18 describes the TFWR fields.

Table 11-18. TFWR Field Descriptions

Bits	Name	Description
31–2	—	Reserved, should be cleared.
1–0	X_WMRK	Transmit FIFO watermark. Frame transmission begins when the number of bytes selected by this field are written into the transmit FIFO, if an end of frame has been written to the FIFO, or if the FIFO is full before the selected number of bytes are written. The options are: 0X 64 bytes written to transmit FIFO 10 128 bytes written to transmit FIFO 11 192 bytes written to transmit FIFO

11.5.12 FIFO Transmit Start Register (TFSR)

The TFSR register, Figure 11-16, can be programmed by the user to indicate the starting address of the transmit FIFO. Usually there is no need to program TFSR. For optimal RAM allocation, do not program TFSR to a value less than its reset value. The value in this register must be added to MBAR + 0x800 to determine the absolute address.

The TFSR register is reset to the first available RAM address.

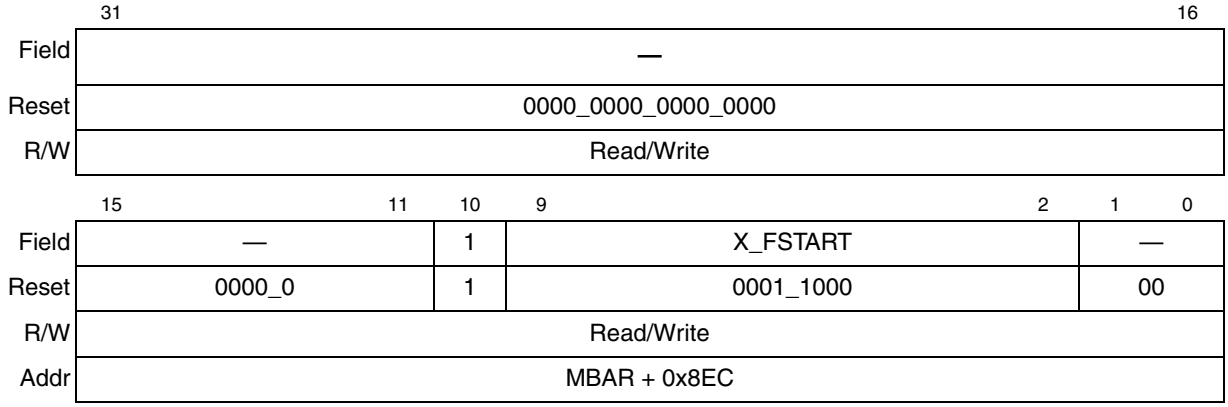

Figure 11-16. FIFO Transmit Start Register (TFSR)

Table 11-19 describes the TFSR fields.

Table 11-19. TFSR Field Descriptions

Bits	Name	Description
31–11	—	Reserved, should be cleared.
10	—	Reserved, should be set.
9–2	X_FSTART	Transmit FIFO starting address. Address of first transmit FIFO location.
1–0	—	Reserved, should be cleared.

11.5.13 Receive Control Register (RCR)

The RCR register, Figure 11-17, controls the operational mode of the receive block.

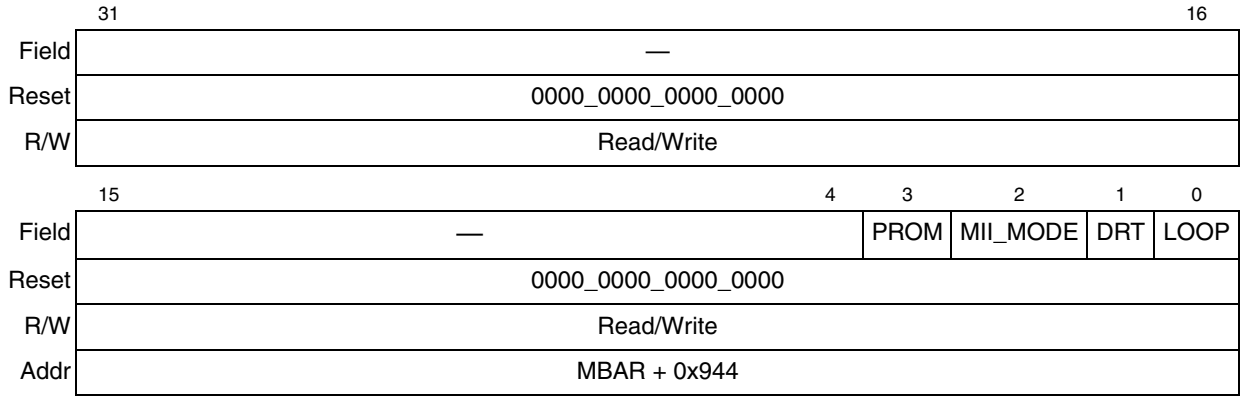

Figure 11-17. Receive Control Register (RCR)

Table 11-20 describes the RCR fields.

Table 11-20. RCR Field Descriptions

Bits	Name	Description
31–4	—	Reserved, should be cleared.
3	PROM	Promiscuous mode. All frames are accepted regardless of address matching.
2	MII_MODE	MII mode enable. Selects the external interface mode. Setting this bit to one selects MII mode, setting this bit equal to zero selects seven-wire mode (used only for serial 10 Mbps). This bit controls the interface mode for both transmit and receive blocks.
1	DRT	Disable receive on transmit 0 Receive path operates independently of transmit (use for full duplex or to monitor transmit activity in half-duplex mode). 1 Disable reception of frames while transmitting (normally used for half-duplex mode).
0	LOOP	Internal loopback. If set, transmitted frames are looped back internal to the FEC and the transmit output signals are not asserted. The system clock is substituted for the E_TxCLK when LOOP is asserted. DRT must be set to zero when asserting LOOP.

11.5.14 Maximum Frame Length Register (MFLR)

As shown in Figure 11-18, the MFLR register serves two purposes. Bits 10–0 provide the user R/W MAX_FL field. The MAX_FL field allows the user to program the maximum legal-size frame. Frames larger than this size cause the BABT interrupt (transmit frames) or BABR interrupt and receive buffer descriptor LG bit to be asserted (receive frames). Frames exceeding the MAX_FL are not truncated.

Bits 31–24 provide an eight-bit read-only field that provides address recognition information from the receive block about the frame currently being received by the FEC.

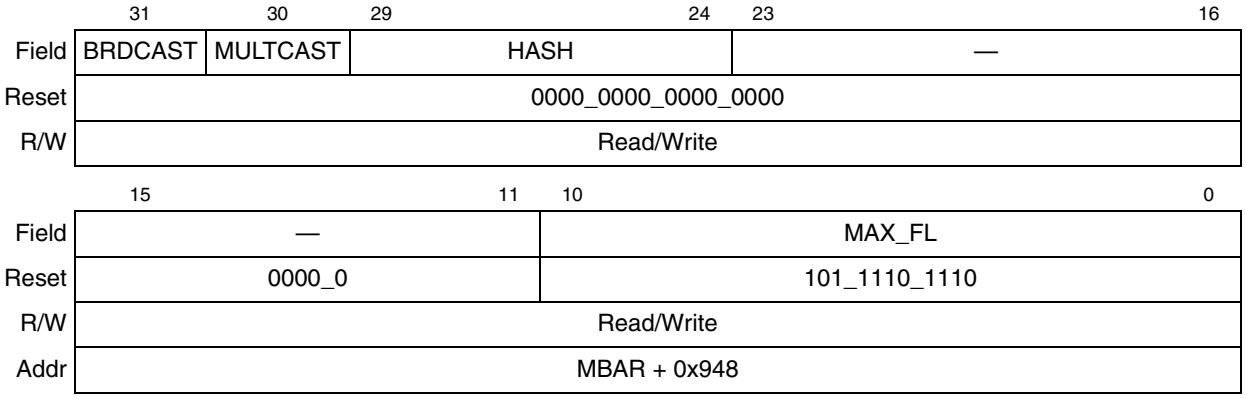

Figure 11-18. Maximum Frame Length Register (MFLR)

Table 11-21 describes the MFLR fields.

Table 11-21. MFLR Field Descriptions

Bits	Name	Description
31	BRDCAST	Broadcast address received. Set if the current receive frame contained a destination address of all ones (the broadcast address). Cleared if the current receive frame does not correspond to a broadcast address.
30	MULTCAST	Multicast address received. Set if the current receive frame contained a multi-cast destination address (the least significant bit of the DA was set). Cleared if the current receive frame does not correspond to a multi-cast address.
29–24	HASH	Current hash value. Corresponds to the hash value of the current receive frame's destination address. The hash value is a 6-bit field extracted from the least significant portion of the CRC register.
23–11	—	Reserved, should be cleared.
10–0	MAX_FL	Maximum frame length. Length is measured starting at DA and includes the CRC at the end of the frame. Transmit frames longer than MAX_FL cause the BABT interrupt to occur. Receive frames longer than MAX_FL cause the BABR interrupt to occur and set the LG bit in the end-of-frame buffer descriptor. Frames exceeding the MAX_FL are not truncated. Transmit frames are never truncated, but receive frames are truncated at 2k-1 bytes. The MAX_FL field resets to 1518 decimal and can be programmed either smaller or larger (up to 2k-1). The recommended default value to be programmed by the user is 1518 or 1522 (if VLAN Tags are supported).

11.5.15 Transmit Control Register (TCR)

The TCR register, Figure 11-19, controls the operational mode of the transmit block

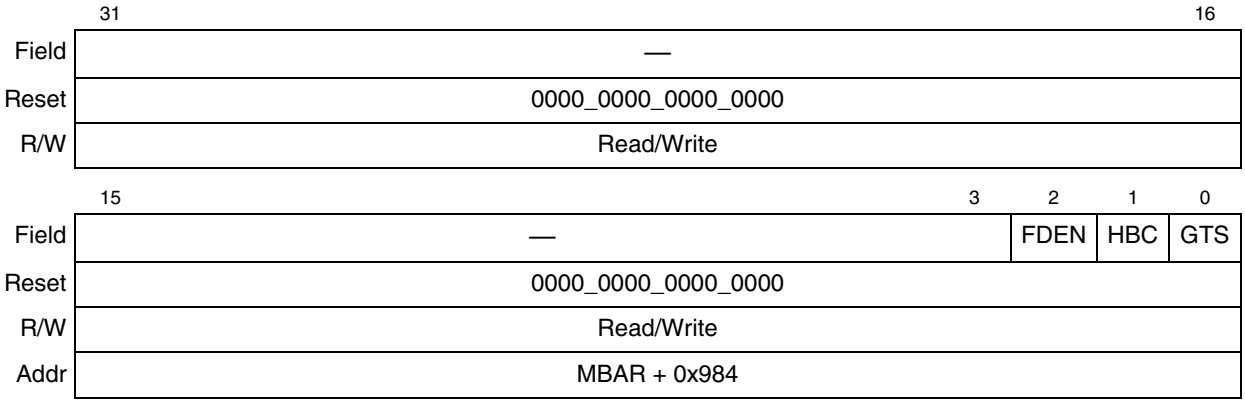

Figure 11-19. Transmit Control Register (TCR)

Table 11-22 describes the TCR fields.

Table 11-22. TCR Field Descriptions

Bits	Name	Description
31–3	—	Reserved, should be cleared.
2	FDEN	Full duplex enable. If set, frames are transmitted independent of carrier sense and collision inputs. This bit should only be modified when ETHER_EN is deasserted.
1	HBC	Heartbeat control. If set, the heartbeat check is performed following end of transmission and the HB bit in the status register is set if the collision input does not assert within the heartbeat window. This bit should be modified only when ETHER_EN is deasserted.
0	GTS	Graceful transmit stop. When this bit is set, the MAC stops transmission after any current frame is complete and the GRA interrupt in the INTR_EVENT register is asserted. If frame transmission is not currently underway, the GRA interrupt is asserted immediately. Once transmission is complete, a restart is accomplished by clearing the GTS bit. The next frame in the transmit FIFO is then transmitted. If an early collision occurs during transmission when GTS = 1, transmission stops after the collision. The frame is transmitted again once GTS is cleared. Note that there may be old frames in the transmit FIFO that are transmitted when GTS is reasserted. To avoid this, deassert ETHER_EN following the GRA interrupt.

11.5.16 RAM Perfect Match Address Low (MALR)

The MALR register contains the lower 32 bits of the 48 bit MAC address used in the address recognition process to compare with the Destination Address field of the receive frames.

This register, shown in Figure 11-20, is not reset and must be initialized by the user prior to operation.

	31															16
Field	ADDR_LOW															
Reset	Undefined															
R/W	Read/Write															

	15															0
Field	ADDR_LOW															
Reset	Undefined															
R/W	Read/Write															
Addr	MBAR + 0xC00															

Figure 11-20. RAM Perfect Match Address Low (MALR)

Table 11-23. MALR Field Descriptions

Bits	Name	Description
31–0	ADDR_LOW	Bytes 0 (bits 31–24), 1 (bits 23–16), 2 (bits 15:8), and 3 (bits 7–0) of the 6-byte address.

11.5.16.1 RAM Perfect Match Address High (MAUR)

The MAUR register contains bytes 4 and 5 of the 48-bit MAC address used in the address recognition process to compare with the destination address field of the receive frames. Byte 0 is the first byte transmitted on the network at the start of the frame.

This register is not reset and must be initialized by the user prior to operation. See Figure 11-21.

	31	16
Field	ADDR_HIGH	
Reset	Undefined	
R/W	Read/Write	

	15	0
Field	ADDR_HIGH	
Reset	0000_0000_0000_0000	
R/W	Read/Write	
Addr	MBAR + 0xC04	

Figure 11-21. RAM Perfect Match Address High (MAUR)

Table 11-24. MAUR Field Descriptions

Bits	Name	Description
31–0	ADDR_HIGH	Bytes 4 (bits 31–24) and 5 (bits 23–16) of the 6-byte address.

11.5.17 Hash Table High (HTUR)

The HTUR register, Figure 11-22, contains the upper 32 bits of the 64-bit hash table used in the address recognition process for receive frames with a multicast address.

This register is not reset and must be initialized by the user prior to operation.

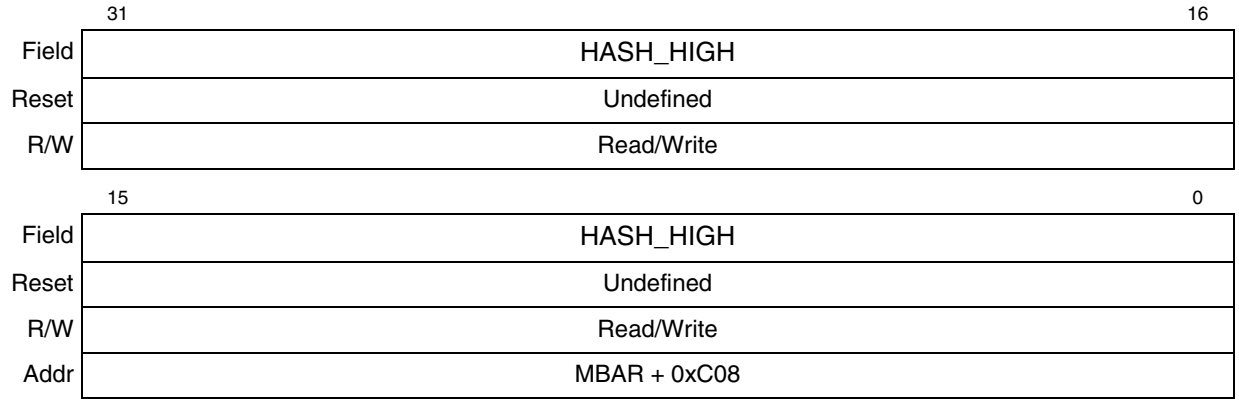

Figure 11-22. Hash Table High (HTUR)

Table 11-25. HTUR Field Descriptions

Bits	Name	Description
31–0	HASH_HIGH	The HTUR register contains the upper 32 bits of the 64-bit hash table used in the address recognition process for receive frames with a multicast address. Bit 31 of HTUR contains hash index bit 63. Bit 0 of HTUR contains hash index bit 32.

11.5.18 Hash Table Low (HTLR)

The HTLR register, Figure 11-23, contains the lower 32 bits of the 64-bit hash table used in the address recognition process for receive frames with a multicast address.

This register is not reset and must be initialized by the user prior to operation.

	31															16
Field	HASH_LOW															
Reset	Undefined															
R/W	Read/Write															

	15															0
Field	HASH_LOW															
Reset	Undefined															
R/W	Read/Write															
Addr	MBAR + 0xC0C															

Figure 11-23. Hash Table Low (HTLR)

Table 11-26. HTLR Field Descriptions

Bits	Name	Description
31–0	HASH_LOW	The HTLR register contains the lower 32 bits of the 64-bit hash table used in the address recognition process for receive frames with a multicast address. Bit 31 of HTLR contains hash index bit 31. Bit 0 of HTLR contains hash index bit 0.

11.5.19 Pointer-to-Receive Descriptor Ring (ERDSR)

This register, Figure 11-24, provides a pointer to the start of the circular receive buffer descriptor queue in external memory. This pointer must be long-word aligned. However, it is recommended it be aligned on a 16-byte boundary (address evenly divisible by 16) in order to improve bus utilization. Bits 1 and 0 should be written to 0 by the user. Non-zero values in these two bit positions are ignored by the hardware.

This register is not reset and must be initialized by the user prior to operation.

	31															16
Field	R_DES_START															
Reset	Undefined															
R/W	Read/Write															

	15													2	1	0
Field	R_DES_START														0	0
Reset	Undefined															
R/W	Read/Write															
Addr	MBAR + 0xC10															

Figure 11-24. Pointer-to-Receive Descriptor Ring (ERDSR)

Table 11-27. ERDSR Field Descriptions

Bits	Name	Description
31–2	R_DES_START	Pointer to start of receive buffer descriptor queue.
1–0	—	Reserved, should be cleared.

11.5.20 Pointer-to-Transmit Descriptor Ring (ETDSR)

This register provides a pointer to the start of the circular transmit buffer descriptor queue in external memory. This pointer must be long-word aligned. However, it is recommended it be aligned on a 16 byte boundary (address evenly divisible by 16) in order to improve bus utilization. Bits 1 and 0 should be set to 0 by the user. Non-zero values in these two bit positions are ignored by the hardware.

This register is not reset and must be initialized by the user prior to operation.

	31															16
Field	X_DES_START															
Reset	Undefined															
R/W	Read/Write															
	15													2	1	0
Field	X_DES_START														0	0
Reset	Undefined															
R/W	Read/Write															
Addr	MBAR + 0xC14															

Figure 11-25. Pointer-to-Transmit Descriptor Ring (ETDSR)

Table 11-28. ETDSR Field Descriptions

Bits	Name	Description
31–2	X_DES_START	Pointer to start of transmit buffer descriptor queue.
1–0	—	Reserved, should be cleared.

11.5.21 Receive Buffer Size Register (EMRBR)

The EMRBR register dictates the maximum size of all receive buffers. Note that because receive frames are truncated at 2k-1 bytes, only bits 10–4 are used. This value should take into consideration that the receive CRC is always written into the last receive buffer. To allow one maximum size frame per buffer, R_BUFF_SIZE must be set to MAX_FL or larger. The R_BUFF_SIZE must be evenly divisible by 16. To insure this, bits 3–0 are forced low. To minimize bus utilization (descriptor fetches), it is recommended that R_BUFF_SIZE be at least 256 bytes.

This register, Figure 11-26, is not reset and must be initialized by the user prior to operation.

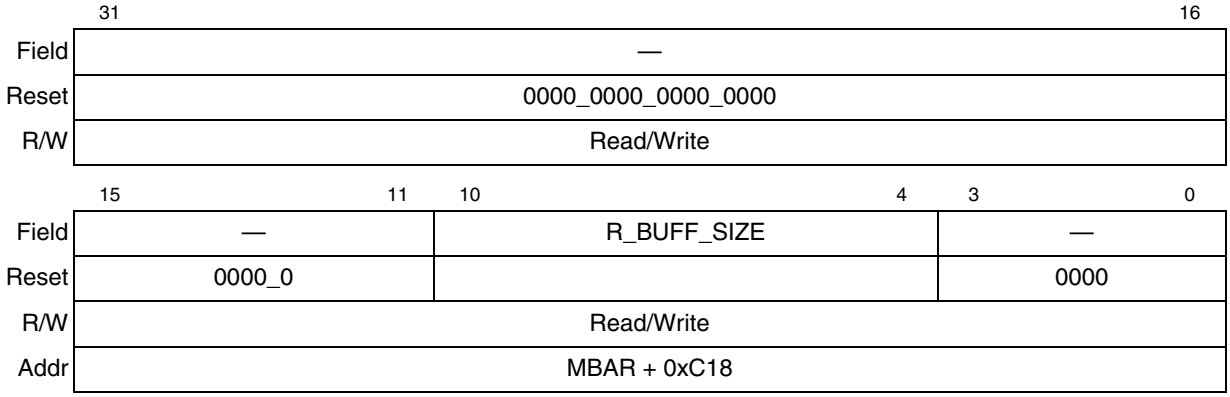

Figure 11-26. Receive Buffer Size (EMRBR)

Table 11-29. EMRBR Field Descriptions

Bits	Name	Description
31–11	—	Reserved, should be cleared.
10–4	R_BUFF_SIZE	Receive buffer size.
3–0	—	Reserved, should be cleared.

11.5.22 Initialization Sequence

This section describes which registers and RAM locations are reset due to hardware reset, which are reset due to the FEC reset, and what locations the user must initialize before enabling the FEC.

As soon as the FEC is initialized and enabled, it operates autonomously. Typically, the driver writes only to RDAR, TDAR, and EIR during operation.

11.5.22.1 Hardware Initialization

In the FEC, hardware resets only those registers that generate interrupts to the MCF5272 processor or cause conflict on bidirectional buses. The registers are reset due to a hardware reset.

Table 11-30. Hardware Initialization

User/System	Register/Machine	Reset Value
User	ECR	Cleared
	EIR	Cleared
	EIMR	Cleared
	MSCR	Cleared
System	MII State Machine	Prevent conflict on MMFR

Other registers reset whenever the ETHER_EN bit is cleared. Clearing ETHER_EN immediately stops all DMA and transmit activity after a bad CRC is sent, as shown in Table 11-31

Table 11-31. ETHER_EN = 0

System/User	Location	Effect
System	DMA block	All DMA activity is terminated
	XMIT block	Transmission is Aborted
User	RDAR	Cleared
	TDAR	Cleared

11.5.23 User Initialization (Prior to Asserting ETHER_EN)

The user must initialize portions the FEC prior to setting the ETHER_EN bit. The exact values depend on the particular application. The sequence is similar to the procedure defined in Table 11-32.

Table 11-32. User Initialization Process (before ETHER_EN)

Step	Description
1	Set EIMR
2	Clear EIR
3	Set IVSR (define ILEVEL)
4	Set FRSR (optional)
5	Set TFSR (optional)
6	Set MAUR and MALR

Table 11-32. User Initialization Process (before ETHER_EN) (continued)

Step	Description
7	Set HTUR and HTLR
8	Set EMRBR
9	Set ERDSR
10	Set ETDSR
11	Set RCR
12	Set TCR
13	Set MSCR (optional)
14	Initialize (Empty) TxBD
15	Initialize (Empty) RxBD

11.5.24 FEC Initialization

In the FEC, the descriptor control machine initializes a few registers whenever the ETHER_EN control is asserted. The transmit and receive FIFO pointers are reset, the transmit backoff random number is initialized, and the transmit and receive blocks are activated. After the FEC initialization sequence is complete, the hardware is ready for operation, waiting for RDAR and TDAR to be asserted by the user.

11.5.24.1 User Initialization (after setting ETHER_EN)

The user initializes portions of the FEC after setting ETHER_EN. The exact values depend on the particular application. The sequence probably resembles the steps shown in Table 11-33, though these could also be done before asserting ETHER_EN.

Table 11-33. User Initialization (after ETHER_EN)

Step	Description
1	Fill Receive Descriptor Ring with Empty Buffers
2	Set RDAR

11.6 Buffer Descriptors

Data associated with the FEC controller is stored in buffers, which are referenced by buffer descriptors (BDs) organized as tables in the dual-port RAM. These tables have the same basic configuration as those used by the USB.

The BD table allows users to define separate buffers for transmission and reception. Each table forms a circular queue, or ring. The FEC uses status and control fields in the BDs to inform the core that the buffers have been serviced, to confirm reception and transmission events, or to indicate error conditions.

11.6.1 FEC Buffer Descriptor Tables

The data for the fast Ethernet frames must reside in memory external to the FEC. The data for a frame is placed in one or more buffers. Each buffer has a pointer to it in a buffer descriptor (BD). In addition to pointing to the buffer, the BD contains the current state of the buffer. To permit maximum user flexibility, the BDs are also located in external memory.

Software defines buffers by allocating/initializing memory and initializing buffer descriptors. Setting the RxBD[E] or TxBD[R] produces the buffer. Software writing to either TDAR or RDAR tells the FEC that a buffer has been placed in external memory for the transmit or receive data traffic, respectively. The hardware reads the BDs and processes the buffers after they have been defined. After the data DMA is complete and the BDs have been written by the DMA engine, RxBD[E] or TxBD[R] are cleared by hardware to indicate that the buffer has been processed. Software may poll the BDs to detect when the buffers have been processed or may rely on the buffer/frame interrupts.

The ETHER_EN signal operates as a reset to the BD/DMA logic. When ETHER_EN is negated, the DMA engine BD pointers are reset to point to the starting transmit and receive BDs. The buffer descriptors are not initialized by hardware during reset. At least one transmit and receive BD must be initialized by software (write 0x0000_0000 to the most significant word of buffer descriptor) before the ETHER_EN bit is set.

The BDs are organized in two separate rings, one for receive buffers and one for transmit buffers. ERDSR defines the starting address of the receive BDs and ETDSR the same for the transmit BDs. The last buffer descriptor in each ring is defined by the wrap (W) bit. When set, W indicates that the next descriptor in the ring is at the location pointed to by ERDSR and ETDSR for the receive and transmit rings, respectively. Buffers descriptor rings must start on a double-word boundary.

The format of the transmit and receive buffer descriptors are given in Figure 11-27 and Figure 11-28.

11.6.1.1 Ethernet Receive Buffer Descriptor (RxBD)

In the RxBD, the user initializes the E and W bits in the first word and the pointer in the second word. When the buffer has been sent as a DMA, the FEC will modify the E, L, M, LG, NO, SH, CR, and OV bits and write the length of the used portion of the buffer in the first word. The M, LG, NO, SH, CR, and OV bits in the first word of the buffer descriptor are modified by the FEC only when the L bit is set.

	15	14	13	12	11	10	9	8	7	6	5	4	3	2	1	0
+0	E	RO1	W	RO2	L	—		M	BC	MC	LG	NO	SH	CR	OV	TR
+2	DATA LENGTH															
+4	Rx Data Buffer Pointer A[31–16]															
+6	Rx Data Buffer Pointer A[15–0]															

Figure 11-27. Receive Buffer Descriptor (RxBD)

The first word of the RxBD contains control and status bits. Its format is detailed below.

Table 11-34. RxBD Field Descriptions

Bits	Name	Description
15	E	Empty. Written by the FEC (= 0) and user (= 1). 0 The data buffer associated with this BD has been filled with received data, or data reception has been aborted due to an error condition. The status and length fields have been updated as required. 1 The data buffer associated with this BD is empty, or reception is currently in progress.
14	RO1	Receive software ownership. This field is reserved for use by software. This read/write bit is not modified by hardware, nor does its value affect hardware.
13	W	Wrap. Written by the user. 0 =The next buffer descriptor is found in the consecutive location. 1 =The next buffer descriptor is found at the location defined in ERDSR.
12	RO2	Receive software ownership. Reserved for use by software. This read/write bit is not modified by hardware, nor does its value affect hardware.
11	L	Last in frame. Written by the FEC. 0 =The buffer is not the last in a frame. 1 =The buffer is the last in a frame.
10–9	—	Reserved, should be cleared.
8	M	Miss. Written by the FEC. This bit is set by the FEC for frames that were accepted in promiscuous mode, but were flagged as a miss by the internal address recognition. Thus, while in promiscuous mode, the user can use the M-bit to quickly determine whether the frame was destined to this station. Valid only if the L-bit and the PROM bit are set. 0 The frame was received because of an address recognition hit. 1 The frame was received because of promiscuous mode.
7	BC	Broadcast. Written by the FEC. Will be set if DA is broadcast. (FF-FF-FF-FF-FF-FF)
6	MC	Mulitcast. Written by the FEC. Is set if DA is multicast and not BC.
5	LG	Rx frame length violation. Written by the FEC. A frame length greater than MAX_FL was recognized. Frames exceeding 2047 bytes are truncated to prevent wrapping hardware length counters. Valid only if the L-bit is set.
4	NO	Rx non-octet-aligned frame. Written by the FEC. A frame that contained a number of bits not divisible by 8 was received, and the CRC check that occurred at the preceding byte boundary generated an error. Valid only if the L-bit is set. If this bit is set, the CR bit is not set.
3	SH	Short frame. Written by the FEC. A frame length that was less than the minimum defined for this channel was recognized. The FEC does not support SH and this bit is always cleared.
2	CR	Rx CRC error. Written by the FEC. Contains a CRC error and is an integral number of octets in length. Valid only if the L-bit is set.
1	OV	Overrun. Written by the FEC. A receive FIFO overrun occurred during frame reception. If this bit is set, the other status bits, M, LG, NO, SH, CR, and CL, lose their normal meaning and are zero. Valid only if the L-bit is set.
0	TR	Truncated receive frame. Written by the FEC. Set if the receive frame is truncated. Frames greater than or equal to 2048 bytes are truncated.
Offset + 2	Data Length	Written by the FEC. Data length is the number of octets written by the FEC into this BD's data buffer if L = 0 (the value is equal to EMRBR), or the length of the frame including CRC if L = 1. It is written by the FEC once as the BD is closed.
Offset + 4	Rx Buffer Pointer	Written by the user. The receive buffer pointer, which always points to the first location of the associated data buffer, must always be evenly divisible by 16. The buffer must reside in memory external to the FEC.

NOTE

Anytime the software driver sets an E bit in a receive descriptor, the driver should immediately write to RDAR.

11.6.1.2 Ethernet Transmit Buffer Descriptor

Data is presented to the FEC for transmission by arranging it in buffers referenced by the channel's TxBDs. The FEC confirms transmission or indicates error conditions using the BDs to inform the host that the buffers have been serviced. In the TxBD, the user initializes the R, W, L, and TC bits and the length (in bytes) in the first word and the buffer pointer in the second words.

If L = 0, then the FEC sets the R bit to 0 in the first word of the BD when the buffer is sent as a DMA. Status bits are not modified.

If L = 1, then the FEC sets the R bit to 0 and will modify the DEF, HB, LC, RL, RC, UN, and CSL status bits in the first word of the BD after the buffer is sent as a DMA, and frame transmission is complete.

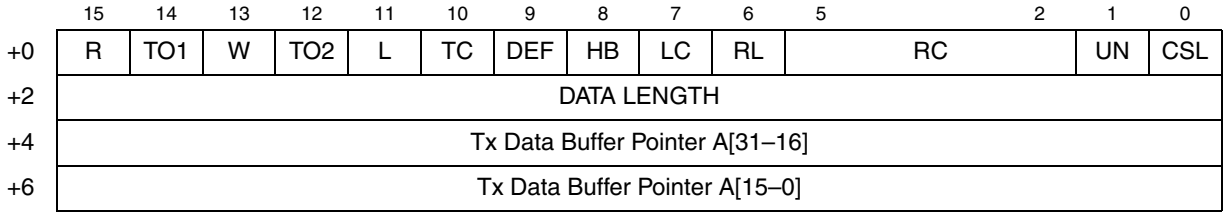

Figure 11-28. Transmit Buffer Descriptor (TxBD)

The TxBD fields are detailed in Table 11-35.

Table 11-35. TxBD Field Descriptions

Bits	Name	Description
15	R	Ready. Written by the FEC (= 0) and user (= 1). 0 The data buffer associated with this BD is not ready for transmission. The user is free to manipulate this BD or its associated data buffer. The FEC clears this bit after the buffer has been transmitted or after an error condition is encountered. 1 The data buffer, which has been prepared for transmission by the user, has not been transmitted or is currently being transmitted. No fields of this BD may be written by the user once this bit is set.
14	TO1	Transmit software ownership bit.Reserved for use by software. This read/write bit is not modified by hardware, nor does its value affect hardware.
13	W	Wrap. Written by the user. 0 The next buffer descriptor is found in the consecutive location. 1 The next buffer descriptor is found at the location defined in ETDSR.
12	TO2	Transmit software ownership bit. Reserved for use by software. This read/write bit is not modified by hardware, nor does its value affect hardware.
11	L	Last in frame. Written by the user. 0 The buffer is not the last in the transmit frame. 1 The buffer is the last in the transmit frame.
10	TC	Tx CRC. Written by the user and is only valid if L = 1. 0 End transmission immediately after the last data byte. 1 Transmit the CRC sequence after the last data byte.
9	DEF	Defer indication. Written by the FEC and is only valid if L = 1. The FEC had to defer while trying to transmit a frame. This bit is not set if a collision occurs during transmission.

Table 11-35. TxBD Field Descriptions (continued)

Bits	Name	Description
8	HB	Heartbeat error. Written by the FEC and is valid only if L = 1. The collision input was not asserted within the heartbeat window following the completion of transmission. Cannot be set unless the HBC bit is set in the TCR register.
7	LC	Late collision. Written by the FEC and is only valid if L = 1. A collision has occurred after 56 data bytes are transmitted. The FEC terminates the transmission.
6	RL	Retransmission limit. Written by the FEC and is only valid if L = 1. The transmitter has failed retry limit + 1 attempts to successfully transmit a message due to repeated collisions on the medium.
5–2	RC	Retry count. Written by the FEC and is valid only if L = 1. These four bits indicate the number of retries required before this frame is successfully transmitted. If RC = 0, then the frame was transmitted correctly the first time. If RC = 15, then the frame was transmitted successfully while the retry count was at its maximum value. If RL is set, then RC has no meaning.
1	UN	Underrun. Written by the FEC and is only valid if L = 1. The FEC encountered a transmit FIFO underrun while transmitting one or more of the data buffers associated with this frame. When transmit FIFO underrun occurs, transmission of the frame stops, and an incorrect CRC is appended. The remaining buffer(s) associated with this frame are sent as a DMA and dumped by the transmit logic.
0	CSL	Carrier sense lost. Written by the FEC and is valid only if L = 1. Carrier sense dropped out or never asserted during transmission of a frame without collision.
-	Data Length	Written by the user. Data length is the number of octets the FEC should transmit from this BD's data buffer. It is never modified by the FEC. Bits [10–0] are used by the DMA engine; bits [15–11] are ignored.
-	Tx Buffer Pointer	Written by the user. The transmit buffer pointer, which contains the address of the associated data buffer, may be even or odd. The buffer must reside in memory external to the FEC. This value is never modified by the FEC.

An underrun occurs when, during transmit, the transmit FIFO empties before the end of the frame. Then, a bad CRC is appended to the partially transmitted data. In addition, the UN bit is set in the last BD for the current frame. This situation can occur if the FEC cannot access an internal bus, or if the next BD in the frame is not available.

NOTE

Anytime the software driver sets an R bit in a transmit descriptor, the driver should immediately write to TDAR.

11.7 Differences between MCF5272 FEC and MPC860T FEC

The MCF5272 features the same FEC as the MPC860T with a few differences. The following list pertains to the MCF5272.

- Limited throughput full-duplex 100 Mbps operation. External bus use is the limiting factor.
- Only big-endian mode is supported for buffer descriptors and buffers.
- Separate interrupt vectors for Rx, Tx and non-time critical interrupts
- Interrupt priority is set in the interrupt controller
- The formula for calculating E_MDC clock frequency differs between MCF5272 and MPC860T:
  - MCF5272: E_MDC_FREQUENCY= system frequency / (4 * MII_SPEED)
  - MPC860T: E_MDC_FREQUENCY= system frequency / (2 * MII_SPEED)

NOTE

MCF5272 ethernet controller signal names are generally identical to those used in the MPC860T, except for a prefix of ‘E_’. For example, MDC in the MPC860T corresponds to E_MDC in the MCF5272.

Chapter 12
Universal Serial Bus (USB)

This chapter provides an overview of the USB module of the MCF5272, including detailed operation information and the USB programming model. Connection examples and circuit board layout considerations are also provided.

The *USB Specification, Revision 1.1* is a recommended supplement to this chapter. It can be downloaded from http://www.usb.org. Chapter 2 of this specification, *Terms and Abbreviations*, provides definitions of many of the terms found here.

NOTE

Unless otherwise stated, all mention of the USB specification refers to revision 1.1.

12.1 Introduction

The universal serial bus (USB) is an industry-standard extension to the PC architecture. The USB controller on the MCF5272 supports device mode data communication between itself and a USB host device, typically a PC. One host and up to 127 attached peripherals share USB bandwidth through a host-scheduled, token-based protocol. The USB uses a tiered star topology with a hub at the center of each star, as shown in Figure 12-1. Each wire segment is a point-to-point connection between the host A connector and a peripheral B connector.

The USB cables contain four wires, two for data and two for power. The USB full-speed bit rate is 12 Mbps. A limited-capability, low-speed mode is also defined at 1.5 Mbps.

The MCF5272 includes the following features:

- Supports full-speed 12-Mbps USB devices and low-speed 1.5-Mbps devices
- Full compliance with the *Universal Serial Bus Specification, Revision 1.1*
- Automatic processing of USB standard device requests: CLEAR_FEATURE, GET_CONFIGURATION, GET_DESCRIPTOR, GET_INTERFACE, GET_STATUS, SET_ADDRESS, SET_CONFIGURATION, SET_FEATURE, and SET_INTERFACE
- Supports either internal or external USB transceiver
- Programmable 512-byte receive and 512-byte transmit FIFO buffers
- USB device controller with protocol control and administration for up to eight endpoints, 16 interfaces, and 16 configurations
- Programmable endpoint types with support for up to eight control, interrupt, bulk, or isochronous endpoints
- Independent interrupts for each endpoint

- Supports remote wakeup
- Detects start-of-frame and missed start-of-frame for isochronous endpoint synchronization
- Notification of start-of-frame, reset, suspend, and resume events

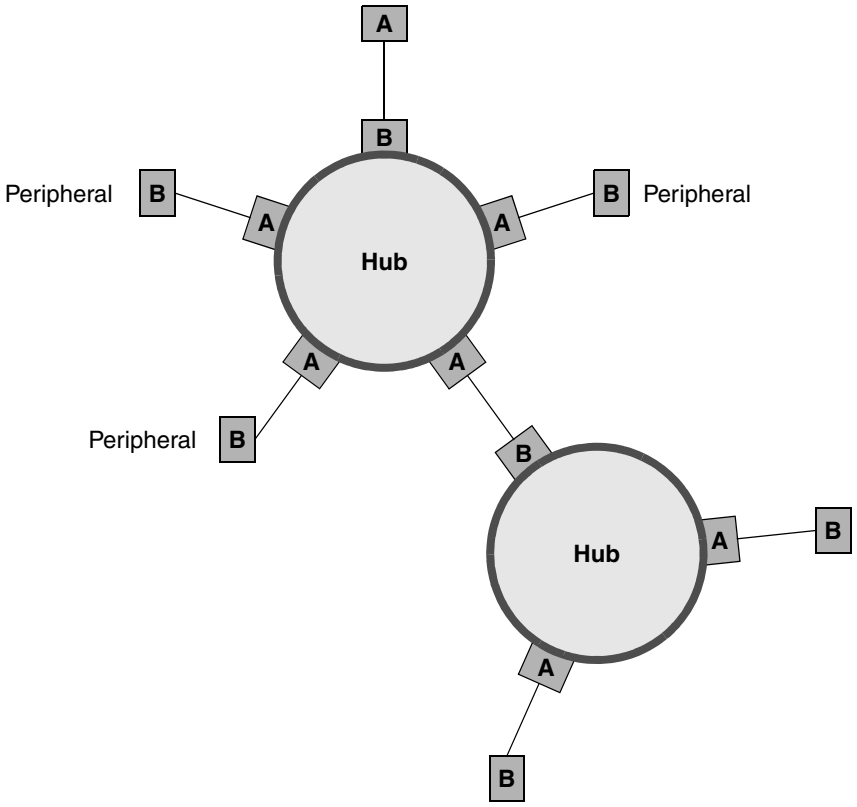

Figure 12-1. The USB "Tiered Star" Topology

12.2 Module Operation

The MCF5272 USB system consists of a protocol state machine which controls the transmitter and receiver modules. The state machine implements only the USB function state diagram. The MCF5272 USB controller can serve as a USB function endpoint, but cannot serve as a USB host.

12.2.1 USB Module Architecture

A block diagram of the USB module is shown in Figure 12-2. The module is partitioned into five functional blocks. These blocks are USB internal transceiver, clock generator, USB control logic, USB request processor, and endpoint controllers.

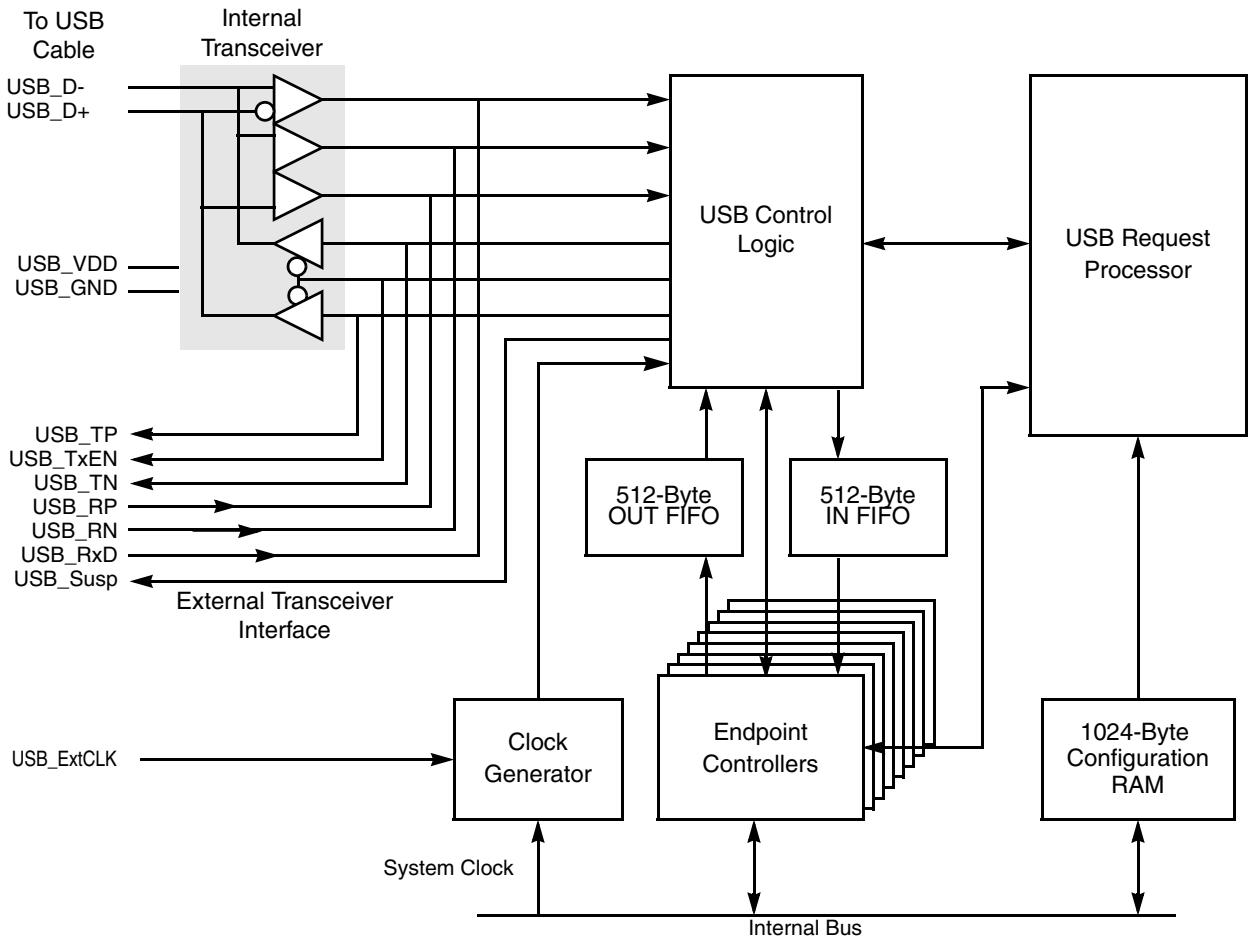

Figure 12-2. USB Module Block Diagram

12.2.1.1 USB Transceiver Interface

The USB module supports either an internal or external USB transceiver. USB_D+ and USB_D- drive USB cable D+ and D- lines, respectively. With additional external protection circuitry (see 12.5.3, "Recommended USB Protection Circuit"), equipment can be built that complies with *Universal Serial Bus Specification*, Rev. 1.1. Transceiver performance specifications are described in the Chapter 7 of the *Universal Serial Bus Specification*. See note on page , [p. 12-1].

When the internal transceiver is selected, (USBEPCTL0[AFEEN] is cleared), the driven outputs can be observed by using the parallel port A if these pins are configured for USB, using the PACNT register, 17.2.1, "Port A Control Register (PACNT)".

The USB module has separate power pins for the internal transceiver.

NOTE

USB_GND should always be grounded.

However, to reduce power consumption, USB_VDD may be left unconnected if either of the following is true:

- The USB module is not used.
- An external transceiver is used.

12.2.1.2 Clock Generator

The USB module requires two clock inputs; the system clock and a 48-MHz data clock. The data clock source is selectable between the USB_ExtCLK pin or the system clock. The clock generator automatically uses the external clock as the data clock if it detects the presence of a clock signal on the USB_CLK pin during system reset. This automatic selection can be overridden by setting bit USBEPCTL0[CLK_SEL], . If a clock signal is not present on USB_CLK, the clock generator uses the system clock.

NOTE

In all cases, the system clock must be at least 24-MHz for the USB module to function properly. If the system clock is used for the USB data clock, the system clock frequency must be 48-MHz.

12.2.1.3 USB Control Logic

The control logic performs the following functions:

- For transmitted data:
  - Packet creation
  - Parallel-to-serial conversion
  - CRC generation
  - NRZI encoding
  - Bit stuffing
- For received data:
  - Sync detection
  - Packet identification
  - End-of-packet detection
  - Serial-to-parallel conversion
  - CRC validation
  - NRZI decoding
  - Bit unstuffing
- For error detection:
  - Bad CRC
  - Timeout waiting for end-of-packet
  - Bit stuffing violations

12.2.1.4 Endpoint Controllers

The MCF5272 has eight independent endpoint controllers that manage data transfer between the on-chip CPU and the USB host for each endpoint. These controllers provide event notification to the user and manage the IN and OUT FIFO dual-port RAM buffers.

The USB endpoint configuration registers (USBEPOCFG*n* or USBEPICFG*n*) are used to configure each endpoint to support either control, interrupt, bulk, or isochronous transfers.

USB always uses endpoint 0 as a control pipe, so it must be configured for control transfer mode. Additional control pipes can be provided by other endpoints.

A total of 1024 bytes of dual-port RAM are available for transmit and receive FIFO buffers. This RAM is partitioned to provide 512 bytes for each direction. The user is responsible for configuring the FIFO for each endpoint. This configuration is flexible within the following constraints:

- FIFO size must be an integral power of 2
- FIFO size must be at least twice the maximum packet size
- FIFO starting address must be aligned on a boundary defined by the FIFO size.

For example, an endpoint with a maximum packet size of 32 bytes can have a FIFO size of 64, 128, or 256 bytes and a starting address of 0, 64, 128, 192, 256, etc.

12.2.1.5 USB Request Processor

The MCF5272 USB request processor automatically processes all of the USB standard requests listed in Table 12-1 except for SYNC_FRAME and the optional SET_DESCRIPTOR request. The SYNC_FRAME request is passed to the user as a vendor-specific request. The USB module responds with a request error when the SET_DESCRIPTOR request is issued. These standard requests are defined in Chapter 9 of the *USB Specification.* See beginning of Page 12-1.

Table 12-1. USB Device Requests

Device Request	USB Request Processor Action
clear_feature	Request processor clears the feature specified by the feature selector parameter. Currently, remote wakeup and endpoint halt are the only features defined by the USB specification. If the feature to be cleared is remote wakeup, the USB block disables the remote wakeup functionality. If the feature to be cleared is endpoint halt, the request processor activates the selected endpoint. The user is notified when the remote wakeup is disabled or an endpoint halt is cleared.
get_configuration	Returns the current configuration as set by a previous SET_CONFIGURATION request. No user notification is provided. No user action required.
get_descriptor	Reads the specified device or configuration descriptor from the configuration RAM and transfers it to the host. Requests for a configuration descriptor returns all of the descriptors associated with a given configuration including interface, endpoint, and class-specific descriptors. This request fails if the configuration RAM has not been initialized. No user notification is provided. The optional requests for string descriptors are not handled automatically by the request processor. GET_DESCRIPTOR requests for string descriptors are passed to the user as a vendor specific request. The string descriptors must be stored in external memory and not the configuration RAM.
get_interface	Returns the selected alternate setting for the specified interface. No user notification is provided.

Table 12-1. USB Device Requests (continued)

Device Request	USB Request Processor Action
get_status	Returns the current status of the specified device, endpoint or interface. No user notification is provided, no user action required.
set_address	Loads the specified address into USBFAR. The control logic begins responding to the new address once the status stage of the request completes successfully. No user notification is provided unless debug mode is enabled.
set_configuration	Reads the configuration RAM. If the configuration is cleared, the USB module is placed into the unconfigured state. If a valid configuration is selected, the appropriate endpoint controllers are activated. An invalid configuration number or error in the configuration descriptor causes the USB module to return a STALL response to the host. The user is notified when this request completes successfully and must initialize the active endpoint controllers.
set_descriptor	Not supported. Returns request error.
set_feature	Sets the specified feature. Remote wakeup and endpoint halt are the only features defined in the USB Specification, Revision 1.0. If the specified feature is remote wakeup, the USB enables the remote wakeup functionality. If the specified feature is endpoint halt, the USB request processor halts the selected endpoint. A halted endpoint returns a STALL response to any requests.
set_interface	Allows the host to select an alternate setting for the specified interface. If a valid alternate setting is selected, the appropriate endpoint controllers are activated. The user is notified upon successful completion of this request and must reinitialize the affected endpoint controllers. NOTE: The user must read the descriptor structure to determine which endpoints correspond to a given interface.
sync_frame	Passed to the user as a vendor specific request.

12.3 Register Description and Programming Model

This section contains a detailed description of each register and its specific function.

12.3.1 USB Memory Map

The operation of the USB is controlled by writing control bytes into the appropriate registers. Table 12-2 is a memory map for USB registers. All of the registers are longword aligned even though they are not all 32 bits wide.

Table 12-2. USB Memory Map

Offset	[31:24]	[23:16]	[15:8]	[7:0]
0x1000	Reserved		USB Frame Number Register (FNR)	
0x1004	Reserved		USB Frame Number Match Register (FNMR)	
0x1008	Reserved		USB Real-time Frame Monitor Register (RFMR)	
0x100C	Reserved		USB Real-time Frame Monitor Match Register (RFMMR)	
0x1010	Reserved			USB Function Address Register (FAR)
0x1014	USB Alternate Setting Register (ASR)			
0x1018	USB Device Request Data1 Register (DRR1)			
0x101C	USB Device Request Data2 Register (DRR2)			
0x1020	Reserved		USB Specification Number Register (SPECR)	
0x1024	Reserved		USB Endpoint 0 Status Register (EP0SR)	
0x1028	USB Endpoint 0 IN Config Register (IEP0CFG)			
0x102C	USB Endpoint 0 OUT Config Register (OEP0CFG)			
0x1030	USB Endpoint 1 Configuration Register (EP1CFG)			
0x1034	USB Endpoint 2 Configuration Register (EP2CFG)			
0x1038	USB Endpoint 3 Configuration Register (EP3CFG)			
0x103C	USB Endpoint 4 Configuration Register (EP4CFG)			
0x1040	USB Endpoint 5 Configuration Register (EP5CFG)			
0x1044	USB Endpoint 6 Configuration Register (EP6CFG)			
0x1048	USB Endpoint 7 Configuration Register (EP7CFG)			
0x104C	USB Endpoint 0 Control Register (EP0CTL)			
0x1050	Reserved		USB Endpoint 1 Control Register (EP1CTL)	
0x1054	Reserved		USB Endpoint 2 Control Register (EP2CTL)	
0x1058	Reserved		USB Endpoint 3 Control Register (EP3CTL)	
0x105C	Reserved		USB Endpoint 4 Control Register (EP4CTL)	
0x1060	Reserved		USB Endpoint 5 Control Register (EP5CTL)	
0x1064	Reserved		USB Endpoint 6 Control Register (EP6CTL)	
0x1068	Reserved		USB Endpoint 7 Control Register (EP7CTL)	

Table 12-2. USB Memory Map (continued)

Offset	[31:24]	[23:16]	[15:8]	[7:0]
0x106C	USB General/Endpoint 0 Interrupt Status Register (EP0ISR)			
0x1070	Reserved		USB Endpoint 1 Interrupt Status Register (EP1ISR)	
0x1074	Reserved		USB Endpoint 2 Interrupt Status Register (EP2ISR)	
0x1078	Reserved		USB Endpoint 3 Interrupt Status Register (EP3ISR)	
0x107C	Reserved		USB Endpoint 4 Interrupt Status Register (EP4ISR)	
0x1080	Reserved		USB Endpoint 5 Interrupt Status Register (EP5ISR)	
0x1084	Reserved		USB Endpoint 6 Interrupt Status Register (EP6ISR)	
0x1088	Reserved		USB Endpoint 7 Interrupt Status Register (EP7ISR)	
0x108C	USB Endpoint 0 Interrupt Mask Register (EP0IMR)			
0x1090	Reserved		USB Endpoint 1 Interrupt Mask Register (EP1IMR)	
0x1094	Reserved		USB Endpoint 2 Interrupt Mask Register (EP2IMR)	
0x1098	Reserved		USB Endpoint 3 Interrupt Mask Register (EP3IMR)	
0x109C	Reserved		USB Endpoint 4 Interrupt Mask Register (EP4IMR)	
0x10A0	Reserved		USB Endpoint 5 Interrupt Mask Register (EP5IMR)	
0x10A4	Reserved		USB Endpoint 6 Interrupt Mask Register (EP6IMR)	
0x10A8	Reserved		USB Endpoint 7 Interrupt Mask Register (EP7IMR)	
0x10AC	USB Endpoint 0 Data Register (EP0DR)			
0x10B0	USB Endpoint 1 Data Register (EP1DR)			
0x10B4	USB Endpoint 2 Data Register (EP2DR)			
0x10B8	USB Endpoint 3 Data Register (EP3DR)			
0x10BC	USB Endpoint 4 Data Register (EP4DR)			
0x10C0	USB Endpoint 5 Data Register (EP5DR)			
0x10C4	USB Endpoint 6 Data Register (EP6DR)			
0x10C8	USB Endpoint 7 Data Register (EP7DR)			
0x10CC	Reserved		USB Endpoint 0 Data Present Register (EP0DPR)	
0x10D0	Reserved		USB Endpoint 1 Data Present Register (EP1DPR)	
0x10D4	Reserved		USB Endpoint 2 Data Present Register (EP2DPR)	
0x10D8	Reserved		USB Endpoint 3 Data Present Register (EP3DPR)	
0x10DC	Reserved		USB Endpoint 4 Data Present Register (EP4DPR)	
0x10E0	Reserved		USB Endpoint 5 Data Present Register (EP5DPR)	
0x10E4	Reserved		USB Endpoint 6 Data Present Register (EP6DPR)	
0x10E8	Reserved		USB Endpoint 7 Data Present Register (EP7DPR)	
0x1400 – 0x17FF	USB Configuration RAM, 1 K Bytes			

12.3.2 Register Descriptions

The following are detailed register diagrams and field descriptions.

12.3.2.1 USB Frame Number Register (FNR)

Once every 1 ms, the USB host issues a start-of-frame packet containing a frame number. The FNR register captures this frame number. Figure 12-3 shows the FNR.

	15 — 11	10 — 0
Field	—	FRM
Reset	0000_0000_0000_0000	
R/W	Read	
Addr	MBAR + 0x1002	

Figure 12-3. USB Frame Number Register (FNR)

Table 12-3 describes FNR fields.

Table 12-3. FNR Field Descriptions

Bits	Name	Description
15–11	—	Reserved, should be cleared.
10–0	FRM	USB frame number. Contains the current USB frame number. FRM is updated with the new frame number each time the device successfully receives a start-of-frame (SOF) packet from the USB host. The new frame number is contained in the SOF packet.

12.3.2.2 USB Frame Number Match Register (FNMR)

FNMR is used to signal, via the FRM_MAT interrupt, when a particular frame number is issued by the USB host. To avoid a false match during intermediate states of a byte write operation to the FNMR, Figure 12-4, byte accesses to this register are not supported and cause an access error.

	15 — 11	10 — 0
Field	—	FRM_MAT
Reset	0000_0000_0000_0000	
R/W	R/W	
Addr	MBAR + 0x1006	

Figure 12-4. USB Frame Number Match Register (FNMR)

Table 12-4 describes FNMR fields.

Table 12-4. FNMR Field Descriptions

Bits	Name	Description
15–11	—	Reserved, should be cleared
10–0	FRM_MAT	Frame number match value. Contains the USB frame number match value. When the FNR value equals the value in the register, a FRM_MAT interrupt is generated.

12.3.2.3 USB Real-Time Frame Monitor Register (RFMR)

The value in the RFMR can be used to determine approximately how much time has elapsed since the USB host sent its last start-of-frame packet.

Because the hardware does not guarantee that any of the bit values are stable during the read access:

- only the higher-order bits should be used
- the returned data should always be de-glitched by verifying that the same value is seen on the higher-order bits for two consecutive read cycles.

Figure 12-5 shows the USB real-time frame monitor register.

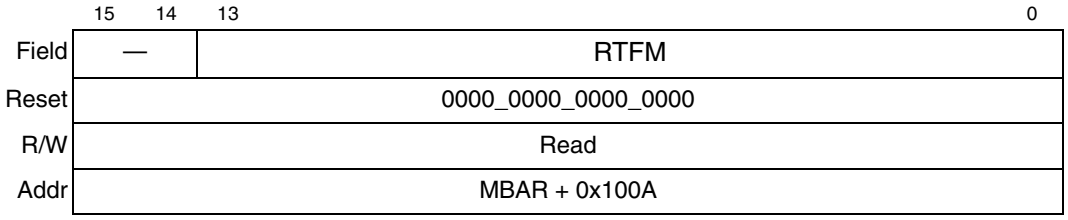

Figure 12-5. USB Real-Time Frame Monitor Register (RFMR)

Table 12-5 lists field descriptions for the USB real-time frame monitor register.

Table 12-5. RFMR Field Descriptions

Bits	Name	Description
15–14	—	Reserved, should be cleared.
13–0	RTFM	Real-time frame count. Contains the current USB frame counter value. The counter is incremented one time for every USB bit time and is reset when a SOF packet from the host is detected or an artificial start of frame (ASOF) interrupt is generated.

12.3.2.4 USB Real-Time Frame Monitor Match Register (RFMMR)

To avoid intermediate false values in the real-time frame monitor match register, Figure 12-6, byte accesses are not supported and cause an access error.

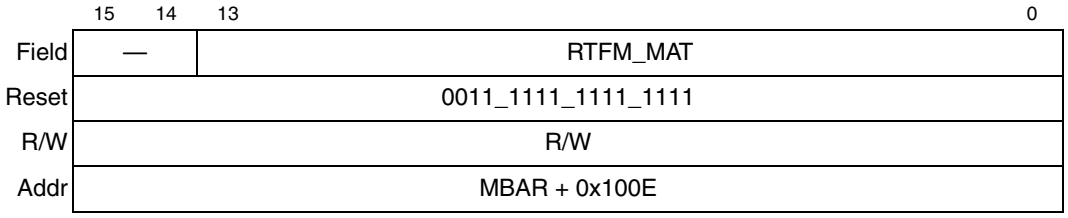

Figure 12-6. USB Real-Time Frame Monitor Match Register (RFMMR)

Table 12-6 lists field descriptions for the USB real-time frame monitor match register.

Table 12-6. RFMMR Field Descriptions

Bits	Name	Description
15–14	—	Reserved, should be cleared
13–0	RTFM_MAT	Real-time frame monitor match. Contains the real-time frame monitor match value. When the RFMR value equals the value in the register, an ASOF interrupt is generated. The value programmed in this register should not be less than 0x2EE0--the nominal period between SOF packets.

12.3.2.5 USB Function Address Register (FAR)

Figure 12-7 shows the USB function address register (FAR). If EP0CTL[DEBUG] is set, EP0CTL[DEV_CFG] also reflects any change in FAR. If DEBUG is zero, the MCF5272 USB controller is not notified if the function address changes. This value is for information only.

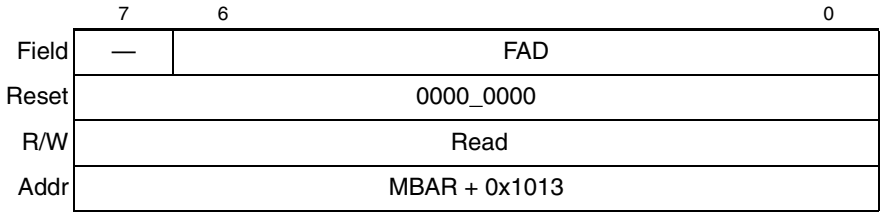

Figure 12-7. USB Function Address Register (FAR)

Table 12-7 gives the USB function address register field descriptions.

Table 12-7. FAR Field Descriptions

Bits	Name	Description
7	—	Reserved, should be cleared
6–0	FAD	USB function address. This field holds the USB address of the device. The USB module writes this field with the USB address assigned to the device with a SET_ADDRESS device request.

12.3.2.6 USB Alternate Settings Register (ASR)

Defines which of several possible interfaces is currently active.

Figure 12-8 shows the USB alternate settings register. The configuration descriptors must be read by the user in order to determine which interfaces are currently valid.

	31	30	29	28	27	26	25	24	23	22	21	20	19	18	17	16
Field	IF15_AS		IF14_AS		IF13_AS		IF12_AS		IF11_AS		IF10_AS		IF9_AS		IF8_AS	
Reset	0000_0000_0000_0000															
R/W	Read															

	15	14	13	12	11	10	9	8	7	6	5	4	3	2	1	0
Field	IF7_AS		IF6_AS		IF5_AS		IF4_AS		IF3_AS		IF2_AS		IF1_AS		IF0_AS	
Reset	0000_0000_0000_0000															
R/W	Read															
Addr	MBAR + 0x1014															

Figure 12-8. USB Alternate Settings Register (ASR)

Table 12-8 lists field descriptions for the USB alternate settings register.

Table 12-8. ASR Field Descriptions

Bits	Name	Description
31–0	IFn_AS	USB alternate settings for interface *n*. This field indicates which alternate setting is active for each interface. 00 Alternate Setting 0 01 Alternate Setting 1 10 Alternate Setting 2 11 Alternate Setting 3

12.3.2.7 USB Device Request Data 1 and 2 Registers (DRR1/ 2)

The device request data registers, Figure 12-9 and Figure 12-10, are used to notify the user that an optional standard, class-specific, or vendor-specific request has been received and to pass the request type and parameters to the application. The fields in DRR1 and DRR2 are defined in Chapter 9 of the *USB Specification*. See top of page, [p. 12-1].

	31															16
Field	wValue															
Reset	0000_0000_0000_0000															
R/W	Read															

	15							8	7							0
Field	bRequest								bmRequestType							
Reset	0000_0000_0000_0000															
R/W	Read															
Addr	MBAR + 0x1018															

Figure 12-9. USB Device Request Data 1 Register (DRR1)

	31															16
Field	wLength															
Reset	0000_0000_0000_0000															
R/W	Read															

	15															0
Field	wIndex															
Reset	0000_0000_0000_0000															
R/W	Read															
Addr	MBAR + 0x101C															

Figure 12-10. USB Device Request Data 2 Register (DRR2)

12.3.2.8 USB Specification Number Register (SPECR)

Figure 12-11 shows the USB specification number register.

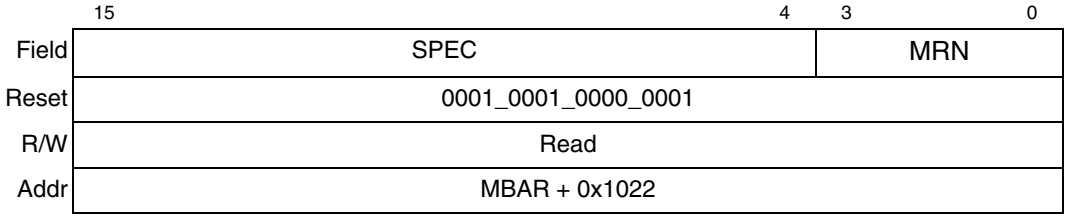

Figure 12-11. USB Specification Number Register (SPECR)

Table 12-9 lists field descriptions for the USB specification number register.

Table 12-9. SPECR Field Descriptions

Bits	Name	Descriptions
15–4	SPEC	USB specification release number. This field identifies the release of the USB Specification that the device complies with. The USB Specification Release Number is in binary-coded decimal (BCD) format.
3–0	MRN	Module revision number.

12.3.2.9 USB Endpoint 0 Status Register (EP0SR)

Figure 12-12 shows the USB endpoint 0 status register. Only written via the standard SET_CONFIGURATION request by the host.

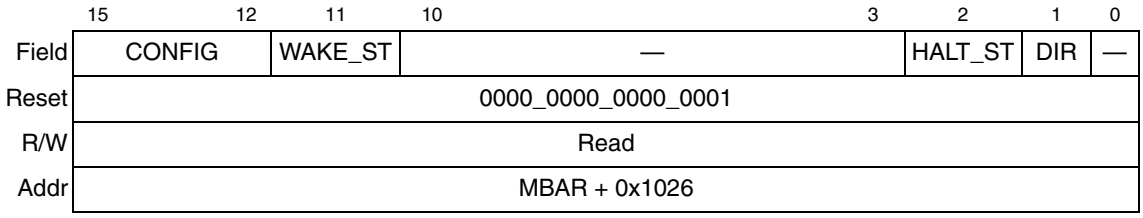

Figure 12-12. USB Endpoint 0 Status Register (EP0SR)

Table 12-10 lists field descriptions the USB endpoint 0 status register.

Table 12-10. EP0SR Field Descriptions

Bits	Name	Descriptions
15–12	CONFIG	Current configuration number. Indicates which configuration is active. Receiving a SET_CONFIGURATION USB standard device request sets the active configuration. A configuration setting of 0 means that the device is unconfigured. Valid only when EPISR0[DEV_CFG] is set
11	WAKE_ST	Remote wakeup status. Indicates whether the USB module has been enabled to generate remote wakeup resume signaling. 1 Enabled. The USB host has issued the SET_FEATURE request with the Remote wakeup feature selector set. 0 Disabled. The USB host has issued the CLEAR_FEATURE request with the remote wakeup feature selector set, or has not set this feature since a USB or system reset has occurred.
10–3	—	Reserved, should be cleared.

Table 12-10. EP0SR Field Descriptions

Bits	Name	Descriptions
2	HALT_ST	Current endpoint 0 halt status. Indicates whether endpoint 0 is currently halted or active. Endpoint 0 is halted if there is an error processing a request. A halt is cleared automatically by a SETUP packet. 1 Endpoint 0 halted 0 Endpoint 0 active
1	DIR	Current endpoint 0 direction. Indicates whether endpoint 0 is currently accessed as an IN or OUT endpoint. 1 The endpoint is configured as an IN endpoint 0 The endpoint is configured as an OUT endpoint
0	—	Reserved, should be cleared.

12.3.2.10 USB Endpoint 0 IN Configuration Register (IEP0CFG)

Figure 12-13 shows the USB Endpoint 0 IN configuration (IEP0CFG) register.

	31	22	21	20	16
Field	MAX_PACKET		—	FIFO_SIZE	
Reset	0000_0000_0000_0000				
R/W	R/W				

	15	11	10	9	0
Field	FIFO_SIZE		—	FIFO_ADDR	
Reset	0000_0000_0000_0000				
R/W	R/W				
Addr	MBAR + 0x1028				

Figure 12-13. USB Endpoint 0 IN Configuration Register (IEP0CFG)

Table 12-11 lists field descriptions for the IEP0CFG register. Only longword writes are allowed. The maximum packet size for endpoint 0 is eight bytes. Writing to the register resets the FIFO. Any data in the FIFO are discarded, and the associated EP*n*DP register is also reset.

Table 12-11. IEP0CFG Field Descriptions

Bits	Name	Descriptions
31–22	MAX_PACKET	Maximum packet size. Must be written with the maximum packet size defined in the device descriptor for endpoint 0 or the endpoint descriptors for other endpoints.
21	—	Reserved, should be cleared.
20–11	FIFO_SIZE	Size of the FIFO. Sets the depth of the FIFO buffer for the endpoint. The FIFO size must be a power of 2. For non-isochronous endpoints, the FIFO size must be at least two times the maximum packet size.
10	—	Reserved, should be cleared.
9–0	FIFO_ADDR	Starting address in the FIFO buffer memory for the endpoint's FIFO. Reading this field returns the current write pointer for IN endpoints or the read pointer for OUT endpoints for the FIFO.

12.3.2.11 USB Endpoint 0 OUT Configuration Register (OEP0CFG)

Figure 12-14 shows the USB endpoint 0 OUT configuration register.

	31–22	21	20–16
Field	MAX_PACKET	—	FIFO_SIZE
Reset	0000_0000_0000_0000		
R/W	R/W		

	15–11	10	9–0
Field	FIFO_SIZE	—	FIFO_ADDR
Reset	0000_0000_0000_0000		
R/W	R/W		
Addr	MBAR + 0x102C		

Figure 12-14. USB Endpoint 0 OUT Configuration Register

See Table 12-11 for a description of the fields.

12.3.2.12 USB Endpoint 1–7 Configuration Register (EP*n*CFG)

Figure 12-15 shows the USB endpoint 1–7 configuration register.

	31–22	21	20–16
Field	MAX_PACKET	—	FIFO_SIZE
Reset	0000_0000_0000_0000		
R/W	R/W		

	15–10	9–0
Field	FIFO_SIZE	—	FIFO_ADDR
Reset	0000_0000_0000_0000		
R/W	R/W		
Addr	MBAR + 0x1030, 0x1034, 0x1038, 0x103C, 0x1040, 0x1044, 0x1048		

Figure 12-15. USB Endpoint 1–7 Configuration Register

See Table 12-11 for a description of the fields.

12.3.2.13 USB Endpoint 0 Control Register (EP0CTL)

Figure 12-16 shows the USB endpoint 0 control register. provides both module level and endpoint 0 specific control (bits 0-9) functions.

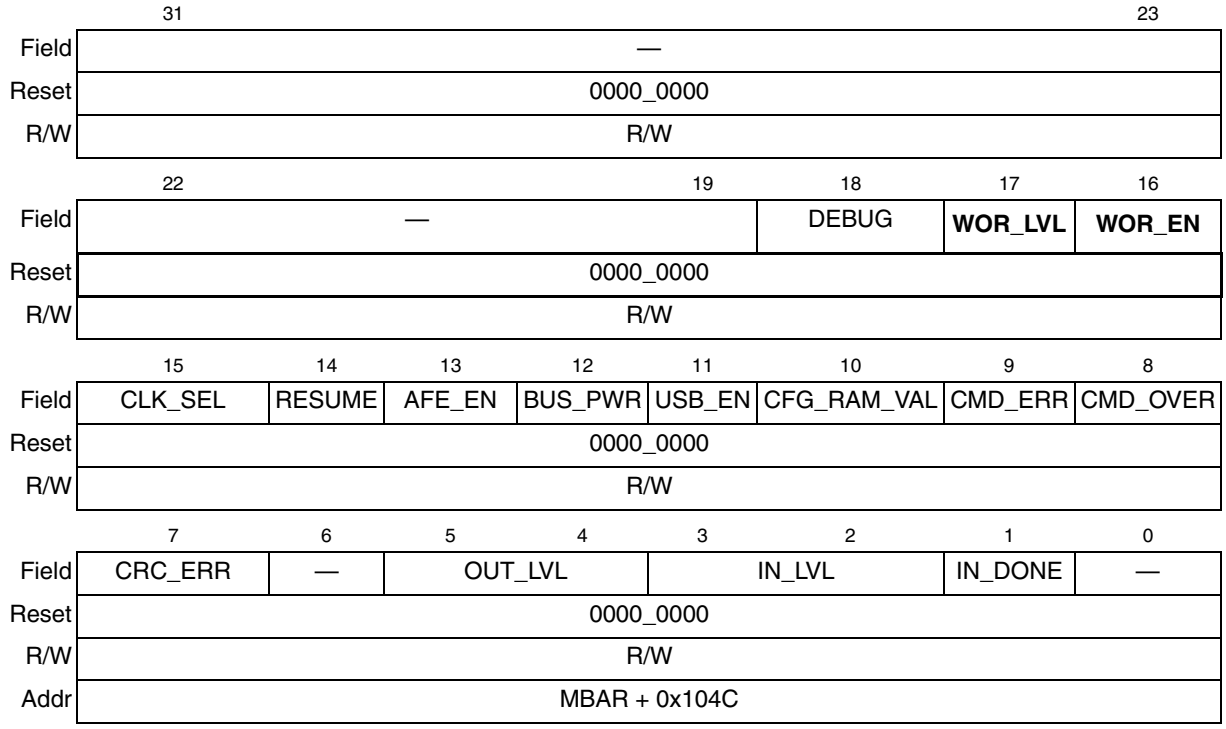

Figure 12-16. USB Endpoint 0 Control Register (EP0CTL)

Table 12-12 lists field descriptions for the USB endpoint 0 control register.

Table 12-12. EP0CTL Field Descriptions

Bits	Name	Description
31–19	—	Reserved, should be cleared.
18	DEBUG	Debug mode. Enters debug mode. Debug mode enables CRC error generation and notification of a change of address. 0 Normal operation 1 Enable debug mode functions
17	WOR_LVL	Wake-on-ring level select. Selects the active level of $\overline{\text{INT1}}$ for the wake-on-ring function. 0 Wake-on-ring function is invoked when $\overline{\text{INT1}}$ pin is 0. 1 Wake-on-ring function is invoked when $\overline{\text{INT1}}$ pin is 1.
16	WOR_EN	Wake-on-ring enable. Generates a RESUME when the active level is detected on $\overline{\text{INT1}}$ pin. 0 Wake-on-ring function disabled 1 Wake-on-ring function enabled Note: the wake-on-ring function generates a RESUME only if the USB module is enabled for remote wakeup by the host, for example, WAKE_ST = 1, and is suspended.
15	CLK_SEL	Clock source selection. Overrides the clock source for the USB module. If the USB_ExtCLK pin is selected after reset, setting this bit forces the USB module to use the internal system clock. 0 Clock is retrieved from the clock selected at reset. 1 Clock is retrieved from the internal system clock. Note: the selected clock must have a frequency of 48 MHz.

Table 12-12. EP0CTL Field Descriptions (continued)

Bits	Name	Description
14	RESUME	Generates RESUME condition. Used to exit the SUSPEND state. The USB control logic ensures the forced resume duration is greater than 10 ms. This command bit is write-only and always returns 0 when read. 0 Default 1 Generate RESUME condition (force data lines to K state) Note: this command generates a RESUME only if the USB is both suspended and enabled for remote wakeup by the host, that is, USBEPSR0[WAKE_ST] = 1.
13	AFE_EN	External USB analog front-end enable. Used to select the internal or external USB analog front end (AFE). The internal AFE is selected by default. 0 The USB internal AFE is powered up and the external transceiver interface is disabled. The driven outputs can be observed on the parallel port A signals if they are configured for USB. 1 The USB internal AFE is powered down and the external transceiver interface is enabled. The internal transceiver outputs, (USBH and USBL), are high impedance.
12	BUS_PWR	Select bus-powered mode. Used to select between bus-powered and self-powered mode. This bit only affects the response to a GET_STATUS device request. This bit should be set according to the current configuration. 0 Self-powered mode 1 Bus-powered mode
11	USB_EN	Enables and disables the USB control logic. Has no effect on USB register values. When cleared, the outputs are high impedance, preventing any response to the host. This bit should be set after USB module registers are initialized and the descriptors are copied into the configuration RAM. 0 Disable USB module 1 Enable USB module
10	CFG_RAM_VAL	Enable USB configuration RAM. Notifies the USB module that the user has loaded the configuration RAM. Must be set in order for the USB module to process the USB standard device requests that access the configuration RAM. These requests are GET_DESCRIPTOR, SET_CONFIGURATION, and SET_INTERFACE. When this bit is set, accesses to the configuration RAM cause an access error. 0 Configuration RAM invalid 1 Configuration RAM valid
9	CMD_ERR	Command error for device request interface. Used to indicate to the endpoint controller that an error has been encountered during class or vendor specific device request or SYNCH_FRAME command processing. This command bit is write only and always returns 0 when read. Result of RequestCMD_OVERCMD_ERR Processed device request successfully10 Error processing the request11 Busy processing the request0X Note: CMD_OVER and CMD_ERR have to be written simultaneously. The CMD_OVER and CMD_ERR bits control the status stage response for vendor and class specific requests.
8	CMD_OVER	Command over for device request interface. Used to indicate to the endpoint controller that processing of a class or vendor specific device request or SYNCH_FRAME command has been completed by the user. This command bit is write only and always returns 0 when read. Note: CMD_OVER and CMD_ERR have to be written simultaneously. The CMD_OVER and CMD_ERR bits control the status stage response for vendor and class specific requests.

Table 12-12. EP0CTL Field Descriptions (continued)

Bits	Name	Description
7	CRC_ERR	CRC error generation enable. This bit enables CRC error generation for debug and test purpose. In order to use this feature, the DEBUG bit must be set. Enabling this bit causes a CRC error on the next data packet transmitted. The CRC_ERR bit must be set again in order to generate another CRC error. This bit only applies to IN transfers. This command bit is write-only and always returns 0 when read. 1 CRC error generation if DEBUG = 1 0 default value
6	—	Reserved, should be cleared.
5–4	OUT_LVL	Endpoint 0 OUT FIFO level for interrupt. This field selects the FIFO level to generate an OUT_LVL interrupt. The OUT_LVL interrupt is generated when the FIFO fills above the selected level. 00 FIFO **25%** Full 01 FIFO 50% Full 10 FIFO 75% Full 11 FIFO 100% Full
3–2	IN_LVL	Endpoint 0 IN FIFO level for interrupt. This field selects the FIFO level to generate an IN_LVL interrupt. The IN_LVL interrupt is generated when the FIFO falls below the selected level. 00 FIFO **25%** Empty 01 FIFO 50% Empty 10 FIFO 75% Empty 11 FIFO 100% Empty
1	IN_DONE	This bit controls the USB's response to IN tokens from the host. This bit is set at Reset and must be cleared by software when the last byte of a transfer has been written to the IN-FIFO. This bit is then subsequently set by the USB core when an end of transfer (EOT) event occurs indicating that the transfer has been completed. An end of transfer (EOT) event is indicated by one of the following: a) An IN packet is transmitted that contains less than the maximum number of bytes defined at endpoint configuration. b) A zero length IN packet is transmitted. This occurs when the previously transmitted IN packet was full, and no more data remains in the IN-FIFO. Hence a single zero length packet must be sent to indicate EOT. 0 CPU has completed writing to the IN-FIFO and transfer is in progress. The USB module will send any amount of data in the FIFO or a zero-length packet when the FIFO is empty. 1 Transfer completed or CPU Busy writing transfer into the IN-FIFO. The USB module will only send maximum size packets or NAK responses if the FIFO contains less than a maximum size packet. This bit is set at Reset and on an EOT event.
0	—	Reserved, should be cleared.

12.3.2.14 USB Endpoint 1–7 Control Register (EP*n*CTL)

Figure 12-17 shows the USB endpoint 1–7 control register.

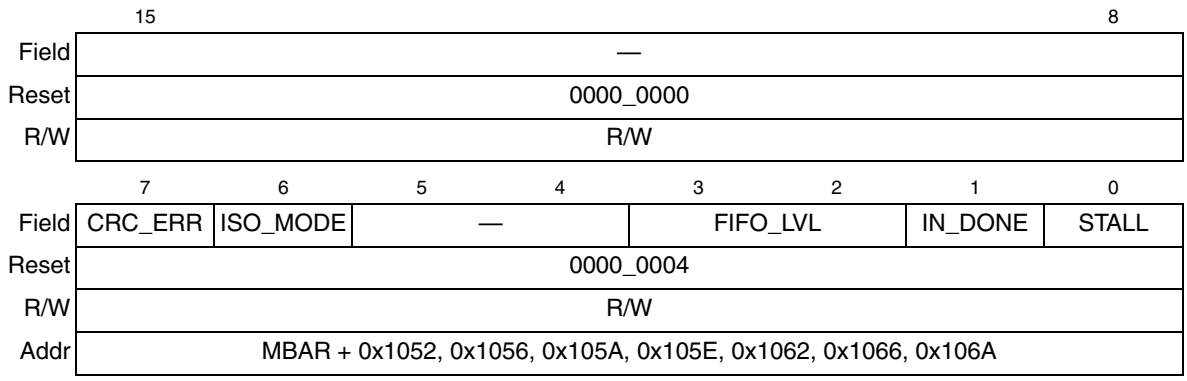

Figure 12-17. USB Endpoint 1-7 Control Register (EP*n*CTL)

Table 12-13 lists the field descriptions for the USB endpoint 1–7 control register.

Table 12-13. EP*n*CTL Field Descriptions

Bits	Name	Description
15–8	—	Reserved, should be cleared.
7	CRC_ERR	CRC error generation enable. Enables CRC error generation for debug and test purposes. To use this feature, the DEBUG bit must be set. Enabling this bit causes a CRC error on the next non-zero-length data packet transmitted. The CRC_ERR bit must be set again in order to generate another CRC error. This bit is only valid for IN endpoints. This command bit is write only and always returns 0 when read. 0 Default Value 1 CRC error generation if DEBUG = 1
6	ISO_MODE	Isochronous transfer mode. This bit must be set when the endpoint is configured for isochronous mode. 0 Non-isochronous transfer mode 1 Isochronous transfer mode
5–4	—	Reserved, should be cleared.
3–2	FIFO_LVL	Endpoint *n* FIFO level for interrupt. This field selects the FIFO level to generate a FIFO_LVL interrupt. The FIFO_LVL interrupt is generated when the FIFO fills above (OUT) or falls below (IN) the selected level. IN FIFOOUT FIFO 00 FIFO $^{25\%}$ emptyFIFO $^{25\%}$ full 01 FIFO $^{50\%}$ emptyFIFO $^{50\%}$ full 10 FIFO $^{75\%}$ emptyFIFO $^{75\%}$ full 11 FIFO emptyFIFO full

Table 12-13. EP*n*CTL Field Descriptions

Bits	Name	Description
1	IN_DONE	This bit controls the USB's response to IN tokens from the host. Set at Reset and on an EOT event and must be cleared by software when the last byte of a transfer has been written to the IN-FIFO. This bit is then subsequently set by the USB core when an end of transfer (EOT) event occurs, indicating that the transfer has been completed. An end of transfer (EOT) event is indicated by one of the following: a) An IN packet is transmitted that contains less than the maximum number of bytes defined at endpoint configuration. b) A zero length IN packet is transmitted. This occurs when the previously transmitted IN packet was full, and no more data remains in the IN-FIFO. Hence a single zero length packet must be sent to indicate EOT. 0 CPU has completed writing to the IN-FIFO and transfer is in progress. The USB module sends all the data in the FIFO, or a zero-length packet when the FIFO is empty. 1 Transfer completed or CPU is busy writing to the IN-FIFO. The USB module only sends maximum-sized packets or NAK responses if the FIFO contains less data than the maximum packet size.
0	STALL	Force STALL response. Causes the endpoint to return a STALL handshake when polled by either IN or OUT token by the USB host controller. The STALL handshake causes the endpoint to be halted. The STALL bit is not valid for isochronous endpoints. This command bit is write-only and always returns 0 when read. 0 Default 1 Send STALL handshake

12.3.2.15 USB Endpoint 0 Interrupt Mask (EP0IMR) and General/Endpoint 0 Interrupt Registers (EP0ISR)

Figure 12-18 shows the USB endpoint 0 interrupt mask and general/endpoint 0 interrupt registers.

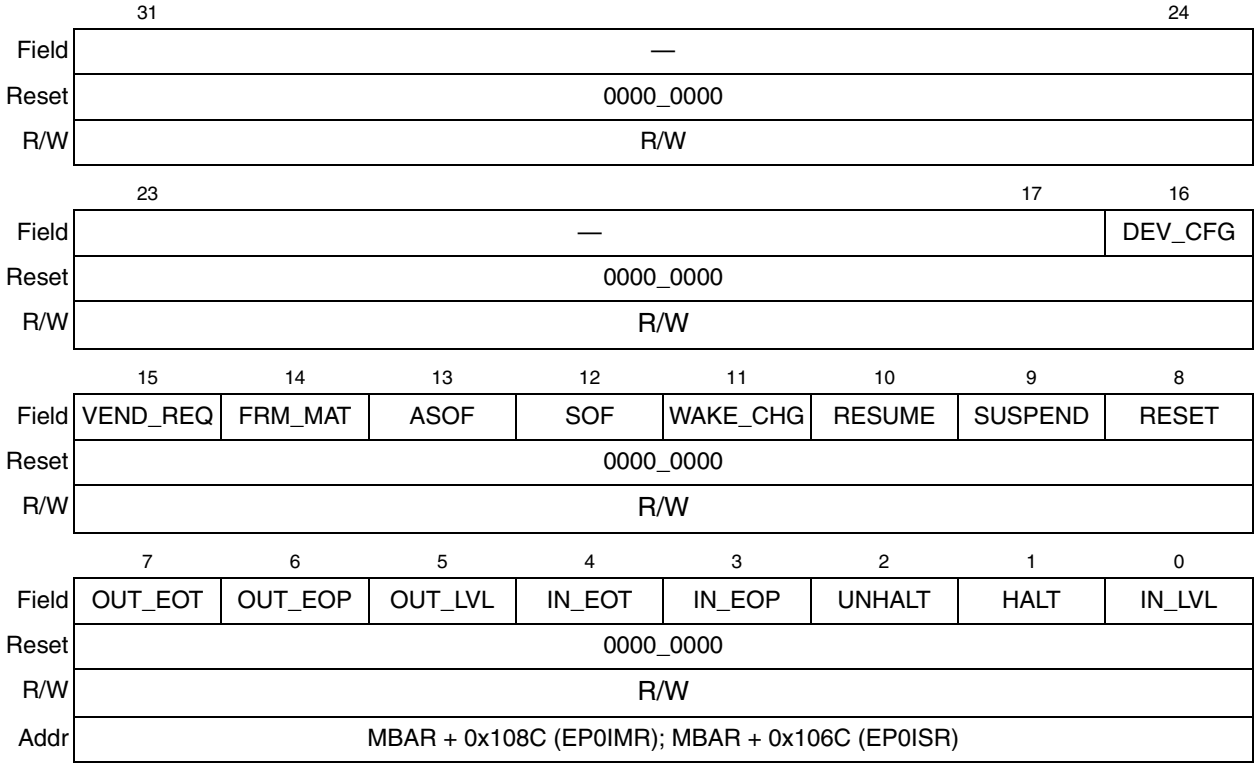

Figure 12-18. USB Endpoint 0 Interrupt Mask (EP0IMR) and General/Endpoint 0 Interrupt Registers (EP0ISR)

NOTE

Interrupt bits are reset by writing a 1 to the specified bits. Writing 0 has no effect.

Table 12-14 lists field descriptions for the USB endpoint 0 interrupt mask and general/endpoint 0 interrupt registers.

Table 12-14. EP0IMR and EP0ISR Field Descriptions

Bits	Name	Description
31–17	—	Reserved, should be cleared.
16	DEV_CFG	Device configuration change interrupt. Set when a device configuration change has been received. The USB standard device requests SET_CONFIGURATION and SET_INTERFACE generate a DEV_CFG interrupt. Any IN or OUT packets to the active endpoints cause a NAK response to the host while this bit is set in order to allow the user to initialize the endpoints' FIFO's. Note that if one of these requests is done repeatedly and therefore the registers don't change, a DEV_CFG interrupt is still generated. If debug mode is enabled, a change in FAR also generates an interrupt. 0 No interrupt pending 1 Device configuration change received

Table 12-14. EP0IMR and EP0ISR Field Descriptions (continued)

Bits	Name	Description
15	VEND_REQ	Class or vendor specific request received. Set when a class- or vendor-specific request is received. When the application detects assertion of VEND_REQ interrupt, it should begin reading DRR1 and DRR2. 0 No interrupt pending 1 Class or vendor specific request received
14	FRM_MAT	Frame number match. Set when the USB frame number matches the value written to the FNMR register. 0 No interrupt pending 1 Frame number match
13	ASOF	Artificial start of frame detected. Set when an artificial SOF is generated. The ASOF is used to notify the user that a SOF packet was not detected as expected. 0 No interrupt pending 1 Artificial SOF generated
12	SOF	Start of frame (SOF) detected. Set when a SOF packet is detected. 0 No interrupt pending 1 SOF detected
11	WAKE_CHG	Remote wakeup status change interrupt. Indicates that a change has occurred in the EPSR0[WAKE_ST]. 0 No interrupt pending 1 Remote wakeup status bit has changed
10	RESUME	Resume. Set when the USB block is in the suspend state and detects resume signaling on the USB data lines. User-initiated resume signaling also causes the RESUME interrupt to be asserted. 0 No interrupt pending 1 USB resume signal detected
9	SUSPEND	Suspend. Set when the USB module detects a suspend state on the USB data lines. The USB suspends when the bus is idle for at least 3 ms. 0 No interrupt pending 1 USB suspend state detected
8	RESET	USB Reset. Set when the USB module detects a USB reset. A USB reset is caused by a single-ended zero (SE0) greater than 2.5 µs. A USB reset has no effect on the registers written by the user. 0 No interrupt pending 1 USB reset signal detected
7	OUT_EOT	End of transfer. Set when the end of a transfer has been reached for OUT FIFO. An OUT_EOT is generated when a packet with a size less than the maximum packet size or the first zero-length packet following maximum size packets is received. The EPDP0 must be read before clearing this interrupt in order to determine the number of bytes of remaining data in the FIFO for the last transfer. Any packets received from the host cause a NAK response until the OUT_EOT interrupt is cleared. 0 No interrupt pending 1 Transfer completed
6	OUT_EOP	End of packet. Set when a packet is successfully received for endpoint 0 OUT. 0 No interrupt pending 1 OUT packet received successfully
5	OUT_LVL	OUT FIFO threshold level. Indicates that the FIFO level has risen above the level set in the EPCTL0 register. 0 No interrupt pending 1 OUT FIFO threshold level reached

Table 12-14. EP0IMR and EP0ISR Field Descriptions (continued)

Bits	Name	Description
4	IN_EOT	End of transfer. This bit is set when the end of a transfer has been reached for an IN endpoint. An EOT interrupt is generated when a packet with a size less than the maximum packet size or the first zero-length packet following maximum size packets is sent. 0 No interrupt pending 1 Transfer completed
3	IN_EOP	End of packet. This bit is set when a packet has been sent successfully for endpoint 0 IN. 0 No interrupt pending 1 IN packet sent successfully
2	UNHALT	Unhalt. This bit is set when the endpoint 0 HALT_ST bit is cleared by a SETUP packet or USB reset. 0 No interrupt pending 1 Endpoint halt cleared
1	HALT	Halt. This bit is set when the endpoint 0 HALT_ST bit is set due to a STALL response to the host. 0 No interrupt pending 1 Endpoint halted
0	IN_LVL	IN FIFO threshold level. This bit indicates that the FIFO level has fallen below the level set in the EPCTL0 register. 0 No interrupt pending 1 IN FIFO threshold level reached

12.3.2.16 USB Endpoints 1–7 Status / Interrupt Registers (EP*n*ISR)

Figure 12-19 shows the USB endpoints 1-7 status/interrupt registers.

	15	14	13	12 5	4	3	2	1	0
Field	HALT_ST	DIR	PRES	—	EOT	EOP	UNHALT	HALT	FIFO_LVL
Reset	0000_0000_0000_0000								
R/W	Interrupt bits are cleared by writing a 1 to the specified bits. Bits 13–15 are read-only status bits.								
Addr	MBAR + 0x1072, 0x1076, 0x107A, 0x107E, 0x1082, 0x1086, 0x108A								

Figure 12-19. USB Endpoints 1–7 Interrupt Status Registers (EP*n*ISR)

Table 12-15 lists field descriptions for the USB endpoints 1–7 interrupt status registers.

Table 12-15. EP*n*ISR Field Descriptions

Bits	Name	Description
15	HALT_ST	Current status of endpoint n. This bit indicates whether endpoint n is currently halted or active. HALT_ST is set due to a SET_FEATURE request with the endpoint halt feature selector set or a STALL response to an IN or OUT packet. HALT_ST is cleared by a CLEAR_FEATURE request with the endpoint halt feature selector set. 0 Endpoint n active 1 Endpoint n halted
14	DIR	Current direction of endpoint n. This bit indicates whether endpoint n is currently configured as an IN or OUT endpoint. 0 Endpoint n configured as an OUT endpoint 1 Endpoint n configured as an IN endpoint
13	PRES	Endpoint *n* present. This bit indicates whether or not endpoint n is present in the current configuration. 0 Endpoint n absent 1 Endpoint n present
12–5	—	Reserved, should be cleared.
4	EOT	End of transfer interrupt. Set when the end of a transfer has been reached. An EOT interrupt is generated when a packet with a size less than the maximum packet size or the first zero-length packet following maximum size packets is sent or received. For OUT endpoints, the EPDP*n* must be read before clearing this interrupt in order to determine the number of bytes of remaining data in the FIFO for the last transfer. For OUT endpoints, any packets received from the host cause a NAK response until the EOT interrupt is cleared. For IN endpoints, the user must wait until the EOT interrupt is set before writing the next transfer to the FIFO. 0 No interrupt pending 1 Transfer completed
3	EOP	End of packet interrupt. Set when a packet is successfully sent or received on endpoint n. 0 No interrupt pending 1 Packet sent or received successfully
2	UNHALT	Endpoint unhalt interrupt. Set when the endpoint n HALT_ST bit is cleared. 0 No interrupt pending 1 Endpoint n unhalted

Table 12-15. EP*n*ISR Field Descriptions (continued)

Bits	Name	Description
1	HALT	Endpoint halt interrupt. Set when the endpoint n HALT_ST bit is set. 0 No interrupt pending 1 Endpoint n halted
0	FIFO_LVL	FIFO threshold level reached interrupt. Indicates that the FIFO level has risen above or fallen below the level set in the EPCTL*n* register for OUT or IN endpoints, respectively. 0 No interrupt pending 1 FIFO threshold level reached

12.3.2.17 USB Endpoint 1–7 Interrupt Mask Registers (EP*n*IMR)

Figure 12-20 shows the USB endpoint 1–7 interrupt mask register.

	15 … 5	4	3	2	1	0
Field	—	EOT_EN	EOP_EN	UNHALT_EN	HALT_EN	FIFO_LVL_EN
Reset	0000_0000_0000_0000					
R/W	R/W					
Addr	MBAR + 0x1092, 0x1096, 0x109A, 0x109E, 0x10A2, 0x10A6, 0x10AA					

Figure 12-20. USB Endpoint 1-7 Interrupt Mask Registers (EP*n*IMR)

Table 12-16 lists field descriptions for the USB endpoint 1–7 interrupt mask register.

Table 12-16. EP*n*IMR Field Descriptions

Bits	Name	Description
15–5	—	Reserved, should be cleared.
4–0		Interrupt mask. These bits are set when the user wants to activate the interrupt source for the specific bit. Refer to Table 12-15 for a description of each interrupt source. 1 Interrupt Enabled 0 Interrupt Disabled

12.3.2.18 USB Endpoint 0–7 Data Registers (EP*n*DR)

Figure 12-21 shows the USB endpoint 0-7 data registers.

	31	16
Field	DATA	
Reset	0000_0000_0000_0000	
R/W	R/W	

	15	0
Field	DATA	
Reset	0000_0000_0000_0000	
R/W	R/W	
Addr	MBAR + 0x10AC, 0x10B0, 0x10B4, 0x10B8, 0x10BC, 0x10C0, 0x10C4, 0x10C8	

Figure 12-21. USB Endpoint 0-7 Data Registers (EP*n*DR)

Table 12-17 lists field descriptions for the USB endpoint 0–7 data registers.

Table 12-17. EP*n*DR Field Descriptions

Bits	Name	Description
31–0	DATA	The EP*n*DR registers allow data to be written to/from each endpoint's FIFO. For IN endpoints, the registers are write-only and writing to a full FIFO is ignored. For OUT endpoints, the registers are read-only, and reading from an empty FIFO returns undefined data. These registers can be accessed using 8-, 16-, or 32-bit accesses in order to read/write 1, 2, or 4 bytes from/to the FIFO at one time.

12.3.2.19 USB Endpoint 0–7 Data Present Registers (EP*n*DPR)

Figure 12-22 shows the USB endpoint 0-7 data present registers. used to coordinate user access to FIFO with external devices to prevent data loss (overwrite) says how much free space is still available. Gives amount of data just received.

	15 … 9	8 … 0
Field	—	DATA_PRES
Reset	0000_0000_0000_0000	
R/W	Read	
Addr	MBAR + 0x10CE, 0x10D2, 0x10D6, 0x10DA, 0x10DE, 0x10E2, 0x10E6, 0x10EA	

Figure 12-22. USB Endpoint 0-7 Data Present Registers (EP*n*DPR)

Table 12-18 describes EPDP*n* fields.

Table 12-18. EP*n*DPR Field Descriptions

Bits	Name	Description
15–9	—	Reserved, should be cleared.
8–0	DATA_PRES	Endpoint *n* data present. This field reflects the number of bytes in the endpoint's FIFO. This field is updated when the user writes to or reads from the FIFO and when the control logic accesses the FIFO. For non-isochronous endpoints, the FIFO level is only updated when a complete packet is received or transmitted without any errors. This occurs synchronously with an EOP interrupt. For isochronous endpoints, the FIFO level is updated by the control logic in real-time rather than only after the transfer of a complete packet. Note: for non-isochronous OUT endpoints, this field is frozen while an EOT interrupt is pending in order to allow the user to determine the number of bytes to read for the last transfer. For endpoint 0, EPDP0 monitors the OUT FIFO only.

12.3.3 Configuration RAM

The USB module supports up to 1 KByte of USB descriptors. The configuration RAM begins at address MBAR + 0x1400 and is longword accessible only. EPCTL0[CFG_RAM_VAL] must be cleared to access the configuration RAM, otherwise an access error results.

12.3.3.1 Configuration RAM Content

The USB host must configure a device before that device's function can be used. The host configures the device by first reading the descriptors for the device. The descriptors must follow the format described in Chapter 9 of the USB specification and any relevant class specification.

NOTE

The USB descriptors use little endian format for word and longword fields. The MCF5272 uses big endian format for words and longwords. The user must make sure that any word or longword fields are stored in the correct byte order.

A device may support multiple configurations. Within any one configuration, the device may support multiple interfaces. An interface consists of a set of endpoints that presents to the host a single feature or function of the device. An interface within a configuration may have alternate settings that redefine the characteristics of the associated endpoints. All devices must provide a device descriptor and at least one configuration, interface and endpoint descriptor. Each configuration must have at least one interface and one endpoint descriptor. Only one configuration is effective at any time, but several interfaces and their related endpoints may be operational at the same time. Only one setting for a particular interface is effective at any time.

12.3.3.2 USB Device Configuration Example

The example descriptor structure in Figure 12-23 shows a device with three different configurations. Refer to Chapter 9 of the USB Specification for information on the contents of each descriptor.

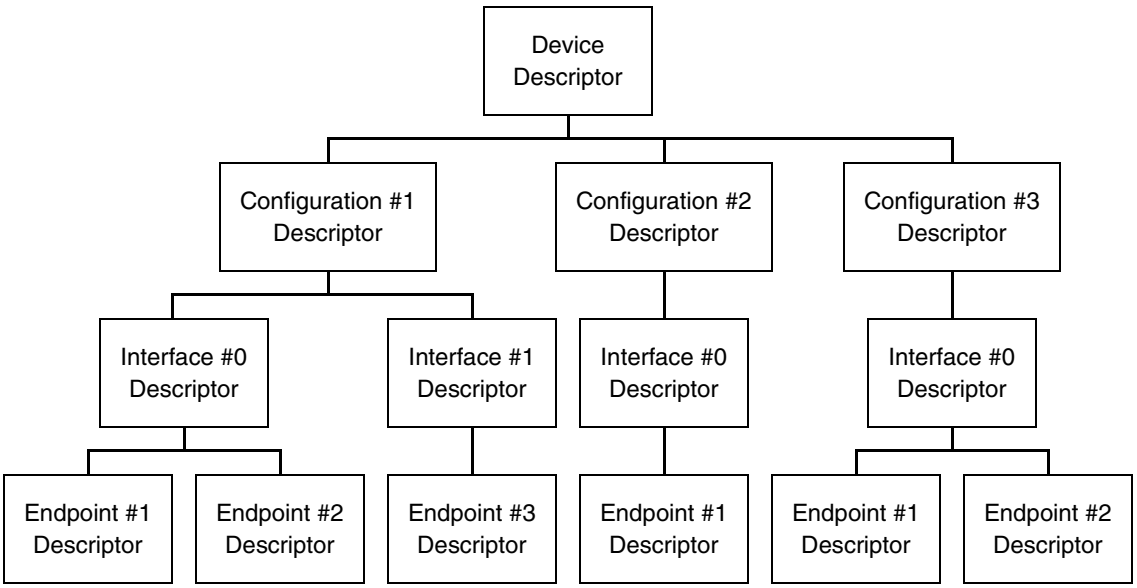

Figure 12-23. Example USB Configuration Descriptor Structure

This example is described in the configuration RAM sequence shown below. The device descriptor begins at address MBAR + 0x1400. Each descriptor must immediately follow the previous descriptor without any empty locations between them.

1. Device Descriptor
2. Configuration #1 Descriptor
3. Interface #0 Descriptor
4. Endpoint #1 Descriptor
5. Endpoint #2 Descriptor
6. Interface #1 Descriptor
7. Endpoint #3 Descriptor
8. Configuration #2 Descriptor

9. Interface #0 Descriptor
10. Endpoint #1 Descriptor
11. Configuration #3 Descriptor
12. Interface #0 Descriptor
13. Endpoint #1 Descriptor
14. Endpoint #2 Descriptor

12.3.4 USB Module Access Times

The access times for the USB module depend on whether the access is to a register, to an endpoint FIFO (EP*n*DR register), or to the configuration RAM.

12.3.4.1 Registers

The USB module registers are accessed through the internal S-bus. Each register access takes 3 clock cycles for reads and writes.

12.3.4.2 Endpoint FIFOs

The FIFO access time depends on the size, the time between accesses, and whether the previous FIFO access was for the same endpoint. After a longword access to an endpoint's FIFO, the next longword in the FIFO is cached for a quicker access time on the next longword read. This mechanism is reset every time another endpoint is accessed. Table 12-19 shows the access times for the FIFOs.

Table 12-19. USB FIFO Access Timing

Access Type	Read	Write
Byte	5	4
Word	6	4
Long (back to back)	8-4-6-6-6-6...	4-6-6-6-6-6...
Long (1 clock gap)	8-3-5-5-5-5...	4-5-5-5-5-5...
Long (2 clock gap)	8-3-4-4-4-4...	4-4-4-4-4-4...
Long (3+ clock gap)	8-3-3-3-3-3...	4-4-4-4-4-4...

12.3.4.3 Configuration RAM

The configuration RAM is longword accessible only. Access times for reads from the configuration RAM are eight clock cycles per access. Clock cycle access times for back-to-back writes to the configuration RAM are 3-5-5-5-5-5... Access times for writes separated by at least 1 clock cycle are 3-3-3-3-3-3…

12.4 Software Architecture and Application Notes

This section describes architecture and applications.

12.4.1 USB Module Initialization

At power-up, the USB module should be initialized within 20 ms if the USB port is connected. This time corresponds to the 10 ms reset signaling and 10 ms reset recovery time when a device is detected. The following steps are necessary to initialize the USB module for operation:

1. Clear EP0CTL[CFG_RAM_VAL,USB_EN].
2. Load the configuration RAM with the descriptors from external ROM. The starting configuration RAM address is MBAR + 0x1400.
3. Select the internal or external USB transceiver in EPC0TL.
4. Write IEP0CFG and OEP0CFG to initialize the EP0 IN and OUT FIFOs.
5. Initialize the EP0 interrupt vectors.
6. Clear all interrupt bits in EP0ISR.
7. Enable the desired EP0 interrupt sources in EP0IMR.
8. Set EP0CTL[USB_EN, CFG_RAM_VALID].

12.4.2 USB Configuration and Interface Changes

Although the USB module handles the SET_CONFIGURATION and SET_INTERFACE requests, the user is still required to perform some initialization when the configuration or alternate settings change. A configuration or alternate setting change is signaled by the DEV_CFG interrupt. The following steps are required to service the DEV_CFG interrupt.

1. Read EPSR0 and ASR to determine the current configuration and alternate settings.
2. Read the endpoint descriptors for the current configuration and alternate settings to determine the endpoint type and maximum packet size for all of the active endpoints.
3. Write EP*n*CFG for all active endpoints to initialize the FIFOs.
4. Initialize the interrupt vectors for the active endpoints.
5. Clear all interrupt bits in the EP*n*ISR registers for all active endpoints.
6. Enable the desired interrupt sources in the EP*n*IMR registers.
7. Clear the DEV_CFG interrupt bit to allow the USB module to access the FIFOs.

12.4.3 FIFO Configuration

The USB module allows a very flexible FIFO configuration. The FIFO configuration is very application dependent. The FIFO configuration depends on the current configuration number, alternate setting for each interface, and each endpoint's type and packet size. The USB module contains two separate 512-byte FIFO spaces: one for IN and one for OUT endpoints. The following guidelines must be adhered to when configuring the FIFO's:

- The MAX_PACKET field in the EP*n*CFG registers must match the wMaxPacketSize field in the corresponding endpoint descriptor. An incorrect setting causes USB errors and unexpected interrupts.
- EP*n*CFG[FIFO_SIZE] must be a power of 2 and must be at least two packets for non-isochronous endpoints.
- The FIFO_ADDR field in the EP*n*CFG registers must be aligned to a boundary defined by the FIFO_SIZE field. For example, a FIFO with a size equal to 64 bytes can have a starting address of 0, 64, 128, 192, 256, etc.
- The FIFO space for an endpoint defined by FIFO_SIZE and FIFO_ADDR must not overlap with the FIFO space for any other endpoint with the same direction.

An example FIFO configuration with a variety of endpoint types and packet sizes is shown in Table 12-20.

Table 12-20. Example FIFO Setup

Endpoint Number	Endpoint Direction	Endpoint Type	Max Packet Size	FIFO Size	FIFO Starting Address	EP*n*CFG Value
0	IN	Control	8	32	480	0x020101C0
0	OUT	Control	8	32	384	0x02010180
1	IN	Interrupt	17	64	384	0x04420180
2	IN	Bulk	64	128	256	0x10040100
3	OUT	Bulk	32	128	256	0x08040100
4	IN	Isochronous	5	32	448	0x014101C0
5	OUT	Isochronous	5	32	416	0x014101A0
6	IN	Isochronous	300	256	0	0x4B080000
7	OUT	Isochronous	300	256	0	0x4B080000

12.4.4 Data Flow

The handling of the data flow to and from each endpoint can be divided between isochronous and non-isochronous endpoints. Isochronous endpoints are designed to transfer streaming data which is continuous and real-time in creation, delivery, and consumption. The timely delivery of isochronous data is ensured at the expense of potential transient losses in the data stream. In other words, any error in electrical transmission in not corrected by hardware mechanisms such as retries. An example of streaming data is voice.

The other endpoint types transfer message based, or bursted data where integrity of the data is more important than timely delivery.

12.4.4.1 Control, Bulk, and Interrupt Endpoints

The data flow for control, bulk, and interrupt endpoints can be handled the same way for all 3 types of endpoints. Control, bulk, and interrupt endpoints all support guaranteed data delivery. If the host detects an error during the read of a packet from an IN endpoint, it requests that the packet be resent from the device. The USB FIFO mechanism takes care of this without interrupting the CPU. In a similar fashion, the USB FIFO mechanism keeps a received packet from being read by the user until the control logic validates the packet for transmission errors.

12.4.4.1.1 IN Endpoints

The following example demonstrates how to transmit a transfer on an IN endpoint:

1. Wait until the last transfer is complete (an EOT interrupt has occurred).
2. Write data to the FIFO to fill it.
3. Wait for EOP interrupt or poll EOP bit.
4. Read EP*n*DP to determine the number of bytes that can be written to the FIFO. Normally, only one packet should be written unless the software does not service the EOP immediately.
5. Write data to the FIFO to fill it or until all of the data for the transfer has been written.
6. Repeat steps 5–7 until all of the data for the transfer has been written to the FIFO.
7. Clear EP*n*CTL[IN_DONE].
8. Wait for the EOT interrupt or poll the EOT bit. The user can now begin processing the next transfer.

12.4.4.1.2 OUT Endpoints

The following example demonstrates how to handle a received transfer on an OUT endpoint:

1. Wait for the EOP interrupt or poll the EOP bit.
2. Read EP*n*DP to determine number of bytes in the FIFO.
3. Read the indicated number of bytes of data from the FIFO into a buffer.
4. Repeat steps 1–3 until EOT is set.
5. When EOT is set, the transfer is complete. While EOT is set, the FIFO is locked and any packets sent for the next transfer cause a NAK response.
6. Read EP*n*DP to determine the number of bytes in the FIFO if any for the last transfer. The EOT bit can be cleared once this register has been read.
7. Read the indicated number of bytes of data from the FIFO into a buffer.
8. The user can now process the received transfer.

12.4.4.2 Isochronous Endpoints

The data flow for isochronous endpoints must be handled differently than the data flow for non-isochronous endpoints. Data on isochronous endpoints is generally streaming data. Therefore, there is no concept of transfers and EOT. In addition, isochronous endpoints differ from other endpoint types in two distinct ways. Isochronous endpoints support packet sizes up to 1023 bytes and isochronous packets are never resent. In order to support the large packet sizes, the FIFO size can be less than two times the

packet size and the EPDP*n* registers are updated in real-time, not just at the end of a packet as with other endpoint types. If the packet size is larger than the FIFO size, the FIFO level interrupt must be used.

Isochronous packets are guaranteed to occur once per USB frame. The SOF and ASOF interrupts are provided in order for the user to synchronize the data flow with the USB. The SOF interrupt occurs every 1 ms provided the USB is active. The ASOF interrupt is generated if the USB module fails to detect a SOF packet within the set timeout period.

It is strongly recommended that interrupts be used rather than polling for isochronous endpoints as isochronous endpoints do not have any error detection or flow-control mechanisms. If the packet size is larger than the FIFO size, using interrupts is required.

12.4.4.2.1 IN Endpoints

The user should write one packet of data to the IN FIFO per frame. If an ASOF interrupt occurs, the user may wish to insert additional data in the data stream if the data for the frame is lost. The following example demonstrates how to handle an isochronous IN packet each frame with a packet size larger than the FIFO size:

1. Wait for the SOF interrupt for synchronization.
2. Write data to the FIFO until filled.
3. Wait for FIFO_LVL interrupt.
4. Read EP*n*DP to determine the number of bytes that can be written to the FIFO.
5. Write data to the FIFO to fill it or until all of the data for the packet has been written.
6. Repeat steps 3–5 until the entire packet has been written to the FIFO.

12.4.4.2.2 OUT Endpoints

The user should read one packet of data from the OUT FIFO per frame. If an ASOF interrupt occurs, the user may wish to discard the data for the frame. The following example demonstrates how to handle an isochronous OUT packet each frame with a packet size larger than the FIFO size:

1. Wait for SOF interrupt for synchronization. The user may want to track that a packet is received for every frame.
2. Wait for the FIFO_LVL interrupt.
3. Read EPDP*n* to determine number of bytes in the FIFO.
4. Read data the indicated number of bytes from the FIFO.
5. Repeat steps 2–4 until entire packet is received.
6. Wait for EOP or SOF interrupt and read any remaining data in the FIFO.
7. An EOT interrupt indicates a short or zero-length packet.

12.4.5 Class- and Vendor-Specific Request Operation

The class- and vendor-specific requests are specific to a particular device class or vendor, and are not processed by the USB request processor. When the USB module receives a class or vendor request, the parameters for the request are written to the DRR1 and DRR2 registers and the user is notified of the

request with the VEND_REQ interrupt. The user must take the following step to process a class or vendor request:

1. Read DRR1 and DRR2 to determine the request type.
2. If the request has a data stage, the EP0 FIFO should be read or written with the number of bytes as defined in the DRR2[wLength]. Refer to for more details on accessing the FIFOs.
3. When the user has finished processing the request, EP0CTL[CMD_OVER] must be set to signal completion of the request. [CMD_ERR] must also be set simultaneously if an error was encountered while processing the request.

12.4.6 REMOTE WAKEUP and RESUME Operation

The MCF5272 supports USB RESUME initiated from three different sources. Two of the sources are for remote wakeup capability. The three different resume mechanisms are listed below:

- The user sets EP0CTL[RESUME]. The USB module responds to this only if the USB is in the suspended state and EP0SR[WAKE_ST] is set. The ColdFire core must be running to write E0PCTL. To meet USB timing specifications, the RESUME bit must not be set until two milliseconds have elapsed since the USB module entered suspend state.
- The wake-on-ring $\overline{\text{INT1}}$ interrupt pin is at the active level defined in EP0CTL. The USB module responds to the $\overline{\text{INT1}}$ pin only if the wake-on-ring function is enabled, the USB is in the suspended state and EP0SR[WAKE_ST] is set. The ColdFire core may be powered down, and the resume signaling wakes up the ColdFire core. The wake-on-ring function must not be enabled until two milliseconds have elapsed since the USB module entered the suspend state in order to meet USB specification timing requirements.
- The USB module detects any activity on the USB, which may be normal bus activity, resume signaling, or reset signaling. The ColdFire core may be powered down, and the resume signaling wakes up the ColdFire core.

12.4.7 Endpoint Halt Feature

USB has the ability to halt endpoints due to errors. The user is notified when an endpoint is halted and when the halt is cleared. When an endpoint is halted, the user should abort the current transfer and reinitialize the FIFO for the endpoint. An endpoint can be halted for a variety of reasons.

- SET_FEATURE request with the endpoint halt feature selector set.
- EP*n*CTL[STALL] is set by the user. This bit should be set only when there is a critical error on the endpoint.
- On control endpoints, an error processing a request.

A halted endpoint can be cleared in several different ways:

- CLEAR_FEATURE request with the endpoint halt feature selector set.
- A USB reset signal.
- A SET_CONFIGURATION or SET_INTERFACE request.
- On control endpoints, a SETUP token for the next request.

12.5 Line Interface

The recommended line interface is shown in Figure 12-24. The transistor used to control the 1.5–kΩ pull-up resistor is optional.

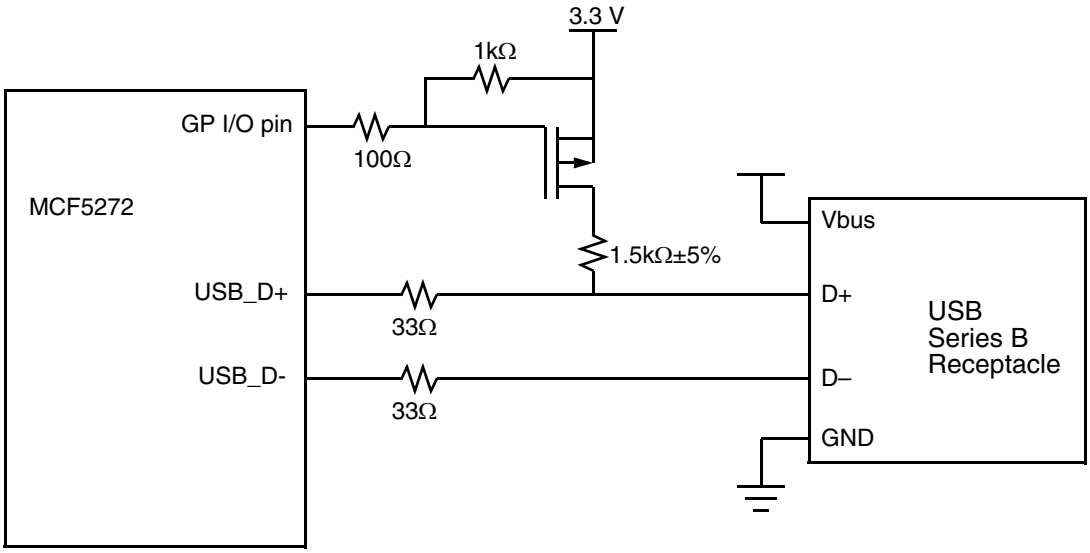

Figure 12-24. Recommended USB Line Interface

12.5.1 Attachment Detection

The USB specification requires that a pull-up resistor must be placed on the D+ signal for the upstream hub to detect attachment of a full-speed device. The user may optionally want to control the attach/detach detection by software instead of only at power on and off. With software control of the pull-up resistor, the user has unlimited time to initialize the USB module. The software controlled pull-up resistor can be implemented with only a few discrete components. The recommended circuit for implementing software control of the pull-up resistor is shown in Figure 12-24.

12.5.2 PCB Layout Recommendations

The device has input protection on all pins and may source or sink a limited amount of current without damage.

The most important considerations for PCB layout deal with noise: noise on the power supply, noise generated by the digital circuitry on the device, and noise resulting from coupling digital signals into the analog signals. The best PCB layout methods to prevent noise–induced problems are as follows:

- Keep digital signals as far away from analog signals (D+ and D-) as possible.
- Use short, low inductance traces for the analog circuitry to reduce inductive, capacitive, and radio frequency noise sensitivities.
- Use short, low inductance traces for digital circuitry to reduce inductive, capacitive, and radio frequency radiated noise.

- Bypass capacitors should be connected between the Vdd and GND pairs with minimal trace length. These capacitors help supply the instantaneous currents of the digital circuitry, in addition to decoupling the noise that may be generated by other sections of the device or other circuitry on the power supply.
- Use short, wide, low inductance traces to connect all of the GND pins together and, with a single trace, connect all of the GND pins to the power supply ground. This helps to reduce voltage spikes in the ground circuit caused by high-speed digital current spikes. Suppressing these voltage spikes on the integrated circuit is the reason for multiple GND leads. A PCB with a ground plane connecting all of the digital and analog GND pins together is the optimal ground configuration, producing the lowest resistance and inductance in the ground circuit.
- Use short, wide, low inductance traces to connect all of the Vdd power supply pins together and, with a single trace, connect all of the Vdd pins to the 3.3V power supply. Connecting all of the digital and analog Vdd pins to the power plane would be the optimal power distribution method for a multi-layer PCB with a power plane.
- The 48-MHz oscillator must be located as close as possible to the chip package. This is required to minimize parasitic capacitance between crystal traces and ground.

12.5.3 Recommended USB Protection Circuit

Figure 12-25 shows the recommended external ESD protection circuit for the USB.

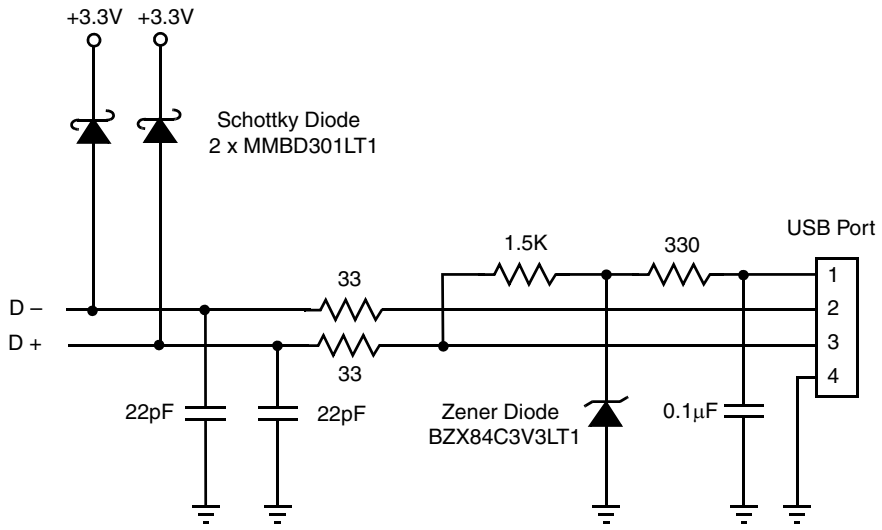

Figure 12-25. USB Protection Circuit

Chapter 13
Physical Layer Interface Controller (PLIC)

This chapter provides detailed information about the MCF5272's physical layer interface controller (PLIC), a module intended to support ISDN applications. The chapter begins with a description of operation and a series of related block diagrams starting with a high-level overview. Each successive diagram depicts progressively more internal detail. The chapter then describes timing generation, the programming model, and concludes with three application examples.

The reader is assumed to have a basic familiarity with ISDN technology and terminology. A glossary containing many ISDN terms can be found on the web at the following URL: http://www.tribecatech.com/isdnterm.htm.

13.1 Introduction

The physical layer interface controller (PLIC) allows the MCF5272 to connect at a physical level with external CODECs (coder/decoder) and other peripheral devices that use either the general circuit interface (GCI) or interchip digital link (IDL) physical layer protocols. This module is primarily intended to facilitate designs that include ISDN (integrated services digital network) interfaces.

The MCF5272 has four dedicated physical layer interface ports for connecting to external ISDN transceivers, codecs, and other peripherals. There are three sets of pins for these interfaces. Port 0 has its own dedicated set of pins. Ports 1, 2, and 3 share a set of pins. Port 3 can also be configured to use a dedicated pin set. Ports 1, 2, and 3 always share the same data clock (DCL).

When the ports are operated in slave mode, the PLIC can support a DCL frequency of 4.096 MHz and frame sync frequency (FSC/FSR) of 8 KHz. When in master mode, DCL should be no greater than one-twentieth of the CPU clock (CLKIN), with a maximum FSC/FSR of 8 KHz.

This chapter is written from the perspective of connecting to an ISDN transceiver with 8-KHz frame sync. The MCF5272 PLIC has four ports, port 0 – port 3, connected through three pin sets, numbered 0, 1, and 3. A port can service, read, or write any 2B + D channel. As shown in Figure 13-1, port 0 connects through pin set 0, and ports 1 and 2 both connect through set 1. port 3 can use either pin set 1 or 3. Pin set 3 consists of data in and data out. Data clock and frame sync are common to pin set 1 and 3. In the case of set 1, which connects multiple ports, separate delayed frame sync generators are provided for each port which distinguish each port's active time slots. See Section 13.6, "Application Examples" for further information.

Figure 13-1 illustrates the basic PLIC system.

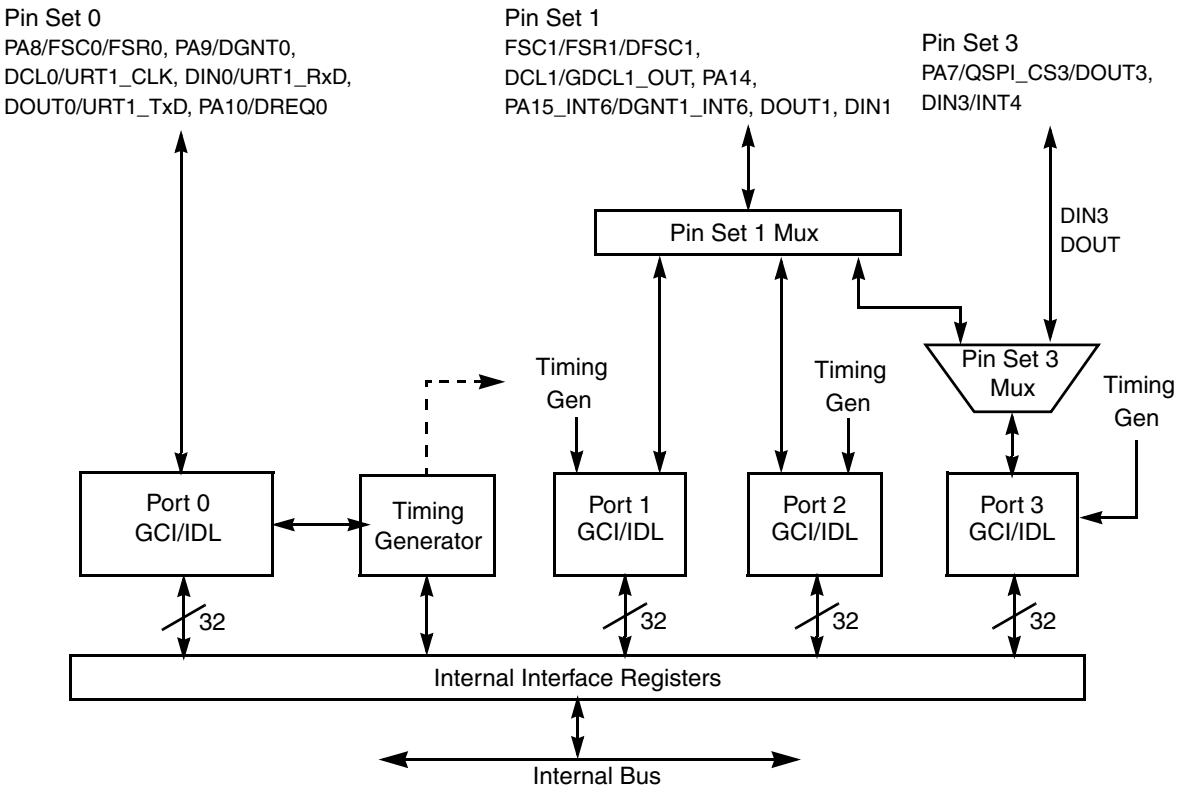

Figure 13-1. PLIC System Diagram

The four ports have the following timing and connectivity features:

- Port 0: Connects through pin set 0. Operates as a slave-only port; that is, an external device must source frame sync clock/frame sync receive (FSC/FSR) and data clock (DCL). These pins are unidirectional inputs. Din0 and Dout0 are dedicated pins for port 0.
- Port 1: Connects through pin set 1. Operates as a master or slave port. In slave mode an external device must source FSC/FSR and DCL. In master mode, DCL1 and FSC1/FSR1 are outputs. These signals are in turn derived from the DCL0 and FSC/FSR from port 0. For port 1 to function in master mode, port 0 must be enabled with an external transceiver sourcing DCL and FSC/FSR. The physical interface pins Din1 and Dout1 serve ports 1, 2, and 3.
- Port 2: Connects through pin set 1. Operates as a slave-only port. Port 2 shares a data clock with port 1: DCL1 when port 1 is in slave mode or GDCL when port 1 is in master mode. A delayed frame sync, DFSC2, derived from FSC1, is connected to the DFSC2 output and fed to the port 2 IDL/GCI block. Users can synchronize the port 2 IDL/GCI block with an offset frame sync, (offset with respect to the port 1 GCI/IDL block), by programming the port 2 sync delay register, P2SDR.
- Port 3: Connects through pin set 1 or 3. Operates as a slave-only port. Port 3 shares a data clock with port 1: DCL1 when port 1 is in slave mode, or GDCL, when port 1 is in master mode. A delayed frame sync, DFSC3, is derived from FSC1 and is fed to the port 3 IDL/GCI block. Programming the port 3 sync delay register, P3SDR, allows it to be synchronized with an offset

frame sync (offset with respect to the port 1 GCI/IDL block). Port 3 can also have dedicated data in and data out pins, DIN3 and DOUT3 of pin set 3 (see Section 13.5.7, “Port Configuration Registers (P0CR–P3CR)”). This allows the MCF5272 to connect to ISDN NT1s that have a common frame sync and clock, but two sets of serial data-in and data-out pins.

The MCF5272 PLIC provides two sets of D-channel arbitration control pins:

- DREQ0 and DGNT0 for pin set 0
- DREQ1 and DGNT1 for pin set 1

Because pin set 1 connects ports 1, 2, and 3, these ports do not have D-channel arbitration control signals.

13.2 GCI/IDL Block

This section describes the GCI/IDL block.

13.2.1 GCI/IDL B- and D-Channel Receive Data Registers

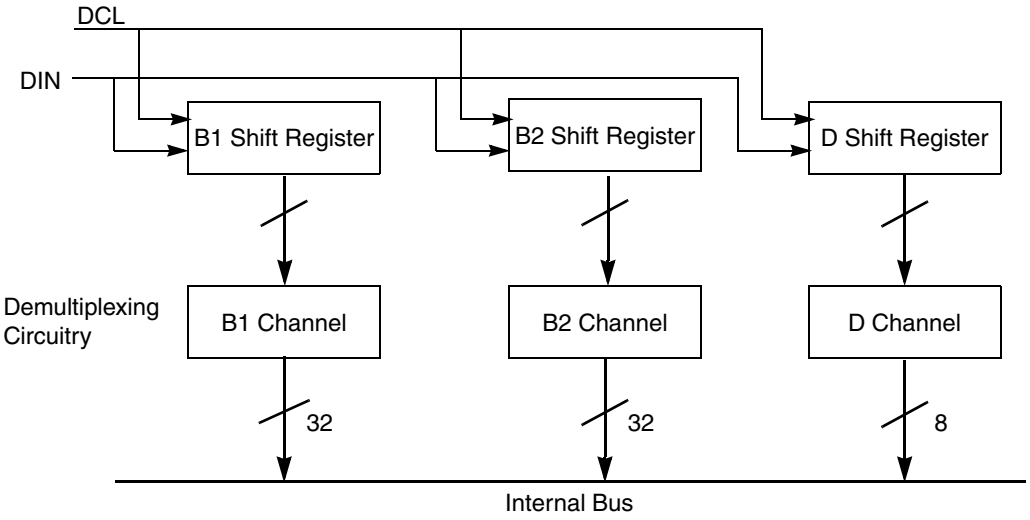

Figure 13-2. GCI/IDL Receive Data Flow

The maximum data rate received for each GCI/IDL port is 144 Kbps: the sum of two 64-Kbps B channels and one 16-Kbps D-channel. Frames of B_1 and B_2 channels are packed together to form longwords (32 bits). Frames of D-channels are packed together to form bytes. For channels B and D, this requires CPU service at a 2-KHz rate, because it requires four frames to fill the 32-bit B-channel register and the 8-bit D-channel register.

The CPU should service the B1 and B2 registers once every 500 μS. Overrun conditions can be avoided only if the CPU services these registers in a timely manner.

The MCF5272 has 4 GCI/IDL interfaces. Thus the theoretical maximum is twelve 32-bit data registers to be read. For most applications the typical number is less.

Figure 13-3 shows the shift register, shadow register, internal bus register, and multiplexor for each B receive channel.

After reset, the B- and D-channel shift registers and shadow registers are initialized to all ones.

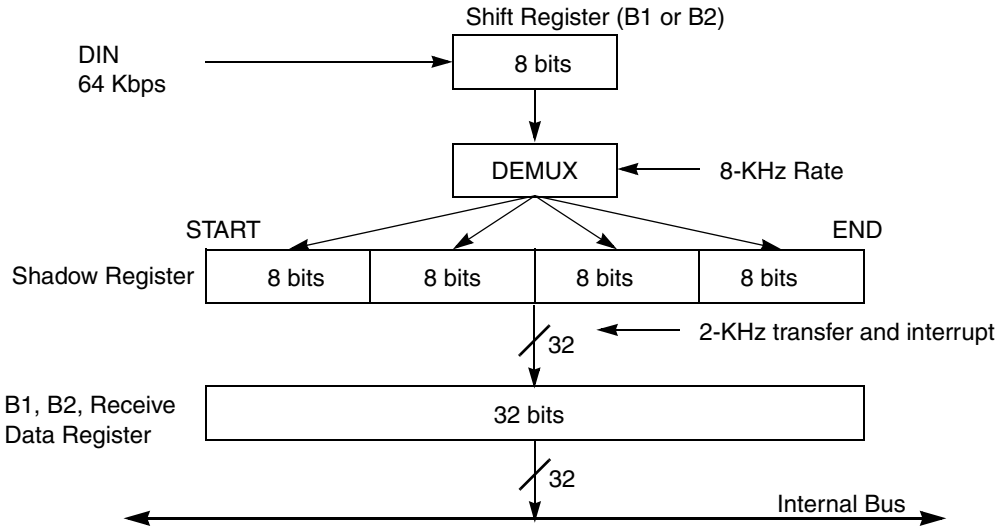

Figure 13-3. GCI/IDL B-Channel Receive Data Register Demultiplexing

13.2.2 GCI/IDL B- and D-Channel Transmit Data Registers

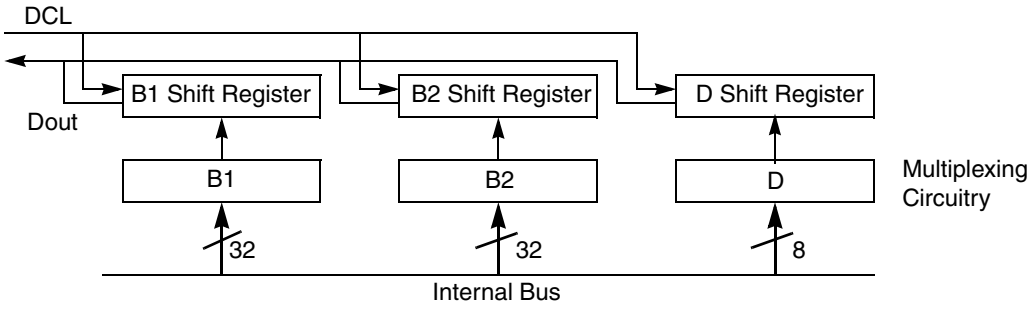

Figure 13-4. GCI/IDL Transmit Data Flow

The maximum transmission rate for each GCI/IDL port is 144 Kbps: the sum of two 64-Kbps B channels and one 16-Kbps D-channel. Frames of B_1, B_2, and D-channels are packed together in a similar way to the receive side.

Because the reception and transmission of information on the GCI/IDL interface is deterministic, a common interrupt is generated at the 2-KHz rate. It is expected that a common interrupt service routine services the transmit and receive registers.

After reset, the B- and D-channel shift registers and shadow registers are initialized to all ones.

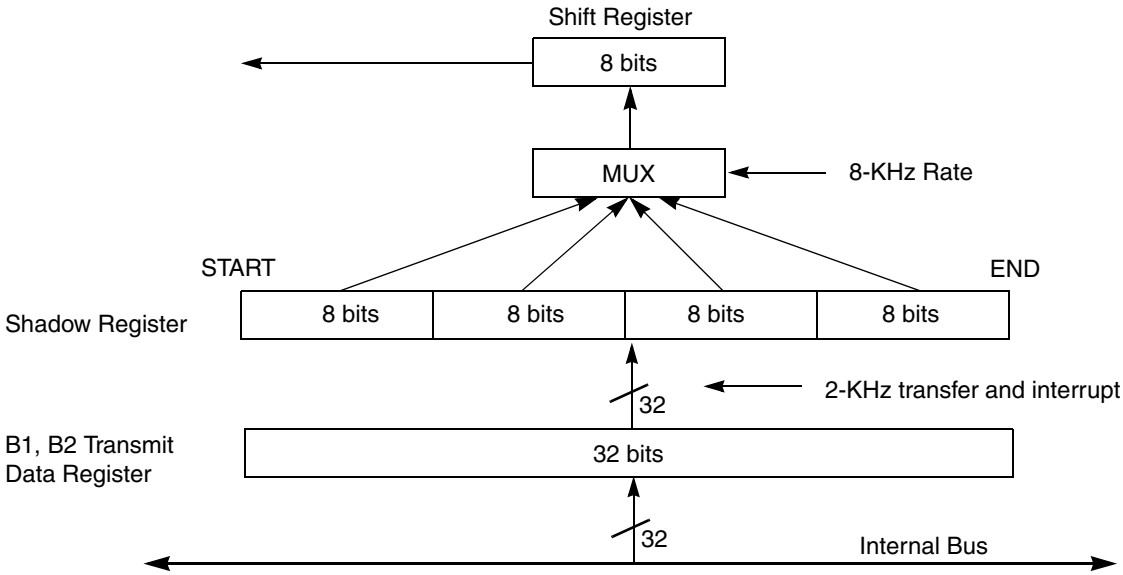

Figure 13-5. GCI/IDL B Data Transmit Register Multiplexing

13.2.3 GCI/IDL B- and D-Channel Bit Alignment

Unencoded voice is normally presented on the physical line most significant bit first (left aligned). See the MC145484 data sheet for an example. Accordingly, the MCF5272 normally assumes incoming data are left-aligned.

However, this convention is reversed when the data stream is HDLC (high-level data link control) encoded. HDLC-stuffing and unstuffing are done by counting bits from the lsb. The look-up table in the software HDLC on this device transmits the lsb first.

13.2.3.1 B-Channel Unencoded Data

Because unencoded voice data appears on the physical interface most significant bit (msb) first, the msb is left aligned in the transmit and receive shift register; that is, the first bit of B-channel received data is aligned in the msb position as shown in Figure 13-6.

The CPU uses longword (32-bit) registers (like P0B1RR) to communicate B-channel data to/from the PLIC. These registers are loaded by concatenating four of the 8-bit/8-KHz frames. The four frames are aligned sequentially as shown in Figure 13-6, with the first frame in the most significant byte (MSB) position, and the fourth frame taking the least significant byte (LSB) position. See Section 13.5.1, “B1 Data Receive Registers (P0B1RR–P3B1RR),” or Section 13.5.5, “B2 Data Transmit Registers (P0B2TR–P3B2TR),” for more information about some of these registers.

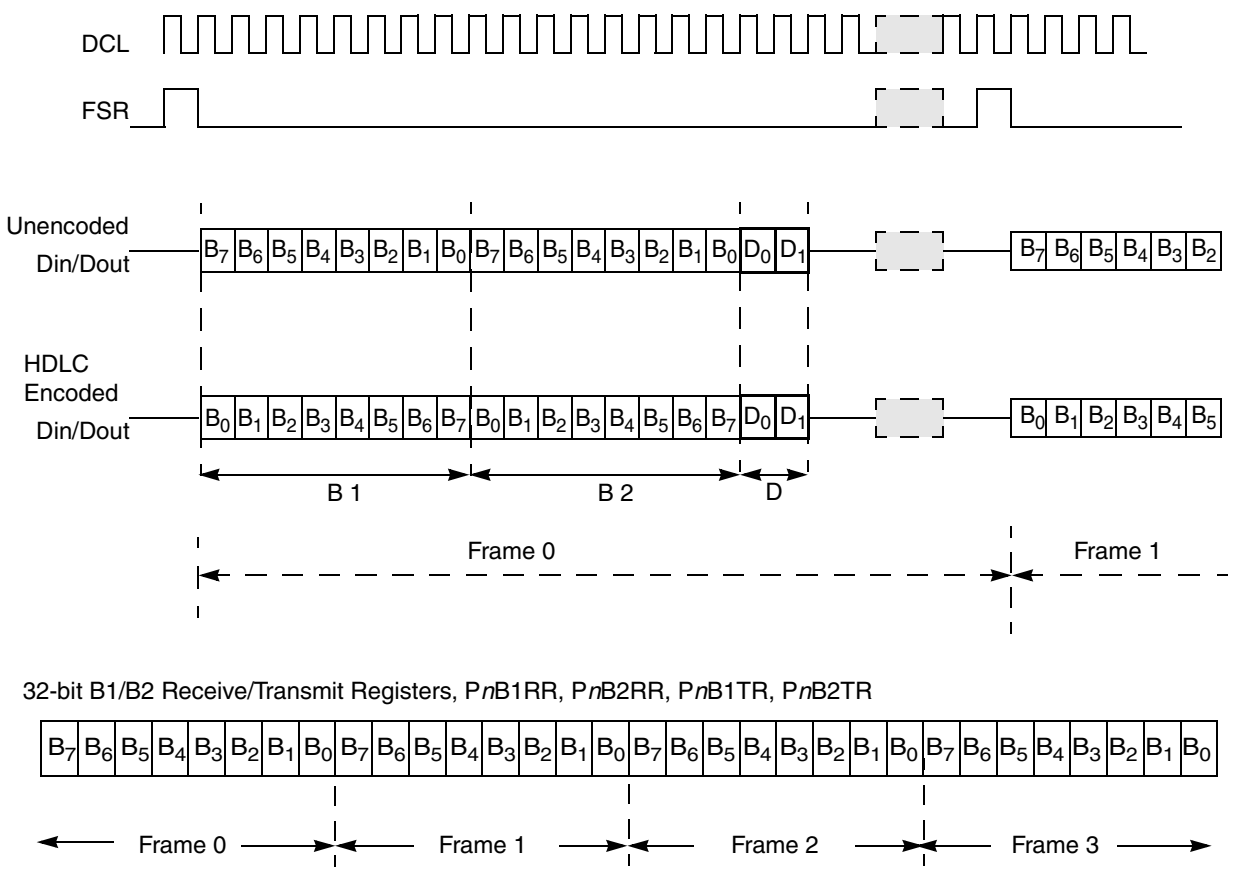

Figure 13-6. B-Channel Unencoded and HDLC Encoded Data

13.2.3.2 B-Channel HDLC Encoded Data

When the incoming B channels contain HDLC encoded data they are presented on the physical line least significant bit (lsb) first. The Soft HDLC expects the first bit received to be aligned in the lsb position of a byte, with the last bit received aligned in the msb position.

Because the presentation of HDLC encoded data on the physical interface is lsb (least significant bit) first for B1 and B2 the lsb is right-aligned in the transmit and receive shift register, that is, the first bit of the B-channel received is aligned in the lsb position through to the last received bit of a byte that is aligned in the msb position.

The ordering of the bytes over four frames within the longword register is as for unencoded data; that is, the first frame is aligned in the MSB through to the fourth frame, which is aligned in the LSB position. See Figure 13-6.

13.2.3.3 D-Channel HDLC Encoded Data

When the incoming D channels contain HDLC-encoded data, they are presented on the physical line lsb first. The Soft HDLC expects the first bit received to be aligned in the lsb position of a byte, with the last bit received aligned in the msb position.

Because the presentation of HDLC encoded data on the physical interface is lsb first, the lsb is right-aligned in the transmit and receive shift register.

A D-channel byte is formed by concatenating two D bits from each of four frames. This data is also right-aligned in the D-channel receive register as shown in Figure 13-7.

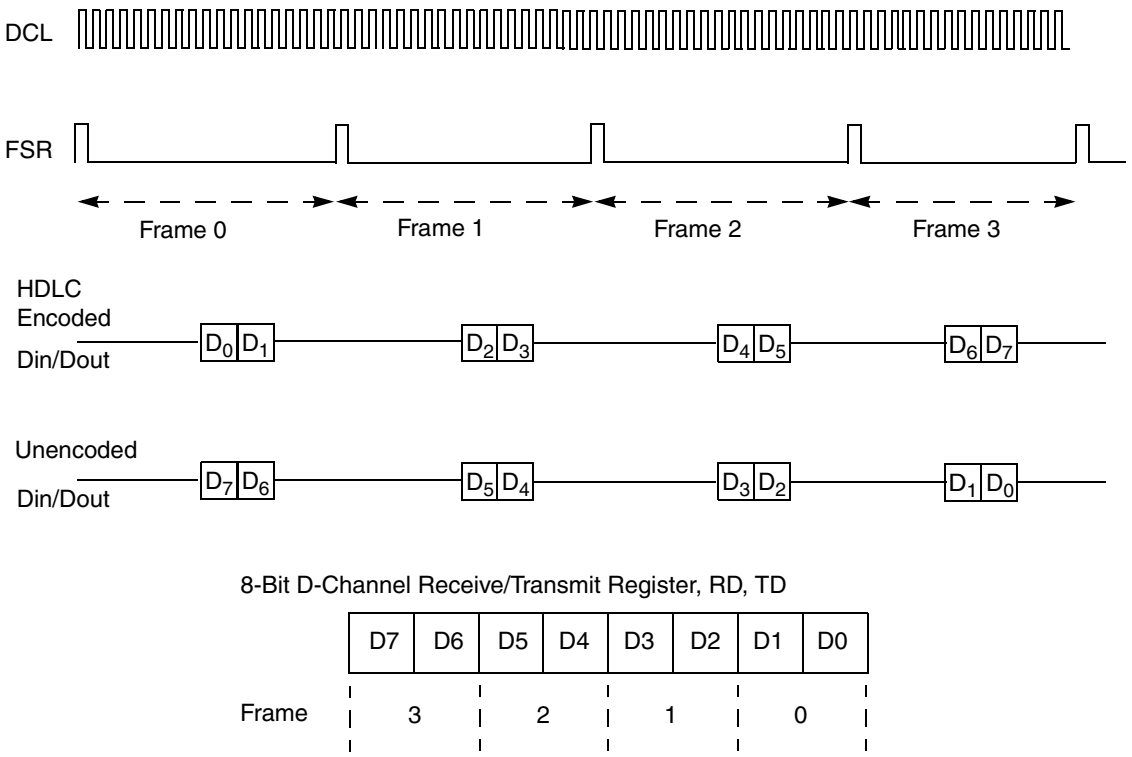

Figure 13-7. D-Channel HDLC Encoded and Unencoded Data.

13.2.3.4 D-Channel Unencoded Data

As with the B channel, a mechanism is provided to support incoming D channels containing unencoded data, even though as of this document's publication date, no communication protocols using unencoded D-channel data are known.

As with unencoded (PCM encoded) B-channel data, it is assumed unencoded D-channel information is presented on the physical line msb first. The msb is left-aligned in the transmit and receive shift register, that is, the first bit received is aligned in the msb position through to the last received bit of a byte that is aligned in the lsb position.

A D-channel byte is formed by concatenating two D bits from each frame over four consecutive frames as shown in Figure 13-7. These 8 bits are also left-aligned in the D-channel receive register, that is, the first two D-channel bits from the first frame go into the two msbs, B_7 and B_6, the next two D-channel bits from the second frame in B_5 and B_4, and so on, until the last two D-channel bits in the fourth frame are aligned in B_1 and B_0.

13.2.3.5 GCI/IDL D-Channel Contention

Typically, when the CPU wants to transmit a D-channel packet, it starts the HDLC framer.

In IDL mode, when the CPU can start sending data from the prepared HDLC frame to the D-channel transmit register, it asserts DREQ by setting the appropriate DRQ bit in the PDRQR register. The D-channel controller hardware looks for a valid DGRANT back from the layer 1 transceiver and, assuming DREQ is also valid, begins transmitting the D-channel packet. PDCSR[DG*n*] reflects the value of the dedicated DGRANT pin. Refer to the MC145574 data sheet for SCIT mode information.

In GCI mode the only D-channel contention control is provided by P*n*CR[G/S], Section 13.5.7, “Port Configuration Registers (P0CR–P3CR).” Provided the PLIC operates in SCIT mode, PDCSR[DG*n*], Section 13.5.19, “D-Channel Status Register (PDCSR),” is defined by the state of P*n*CR[G/S], and is used to control D-channel transmission along with PDRQR[DRQ*n*], Section 13.5.20, “D-Channel Request Register (PDRQR).” In GCI mode, the PLIC ports do not support any other form of D-channel contention such as the indirect mode found on the Freescale MC145574. In GCI mode, the DGRANT pin function found in IDL mode is disabled and the pin can be defined for other functions. Please note that the D-channel periodic interrupts in both the receive and transmit direction are not disabled even though the shift register is disabled by DREQ, DGRANT, and PDRQR[DCNTI*n*] (Section 13.5.20, “D-Channel Request Register (PDRQR)”) configuration.

An override mechanism for D-channel contention control is provided through the D-channel ignore DCNTI bit.

Figure 13-8 illustrates this functionality:

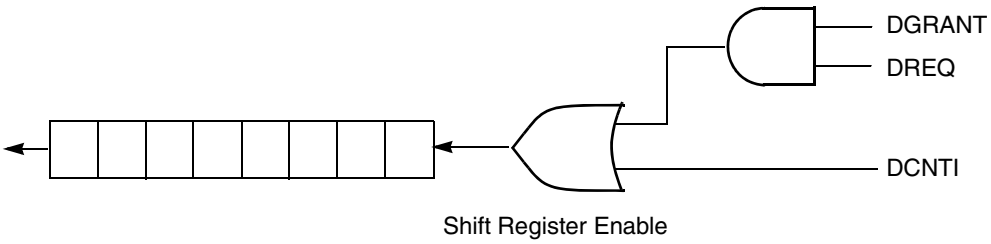

Figure 13-8. D-Channel Contention

13.2.4 GCI/IDL Looping Modes

The PLIC ports can be configured to operate in various looping modes as shown in Figure 13-9. These modes are useful for local and remote system diagnostic functions.

The loopback modes are independent signal loopbacks for the respective ports. These loopbacks allow for the echoing of local or remote information. In auto-echo or remote-loopback modes there is no time switching or time slot assignment function. All data received on Din is transmitted on Dout during the same time slot. Similarly, in local-loopback mode, the information transmitted on the Dout pin is echoed back on Din during the same time slot.

The PLIC transmitter and receiver should both be disabled when switching between modes.

13.2.4.1 Automatic Echo Mode

The port automatically retransmits the received data on a bit-by-bit basis in this mode. The local CPU-to-receiver communication continues normally, but the CPU-to-transmitter link is disabled. While in this mode, received data is clocked on the receiver clock and retransmitted on transmit Dout pin.

13.2.4.2 Local Loopback Mode

TxData is internally connected to RxData in this mode. This mode is useful for testing the operation of a local port by sending data to the transmitter and checking data assembled by the receiver. In this manner, correct channel operations can be assured. Also, both transmitter and CPU-to-receiver communications continue normally in this mode. While in this mode, the receive Din pin is ignored, the transmit Dout is held marking, and the receiver is clocked by the transmitter clock.

13.2.4.3 Remote Loopback Mode

The channel automatically transmits received data on the transmit Dout pin on a bit-by-bit basis in this mode. The local CPU-to-transmitter link is disabled. This mode is useful in testing receiver and transmitter operation of a remote channel. While in this mode, the receiver clock is used for the transmitter.

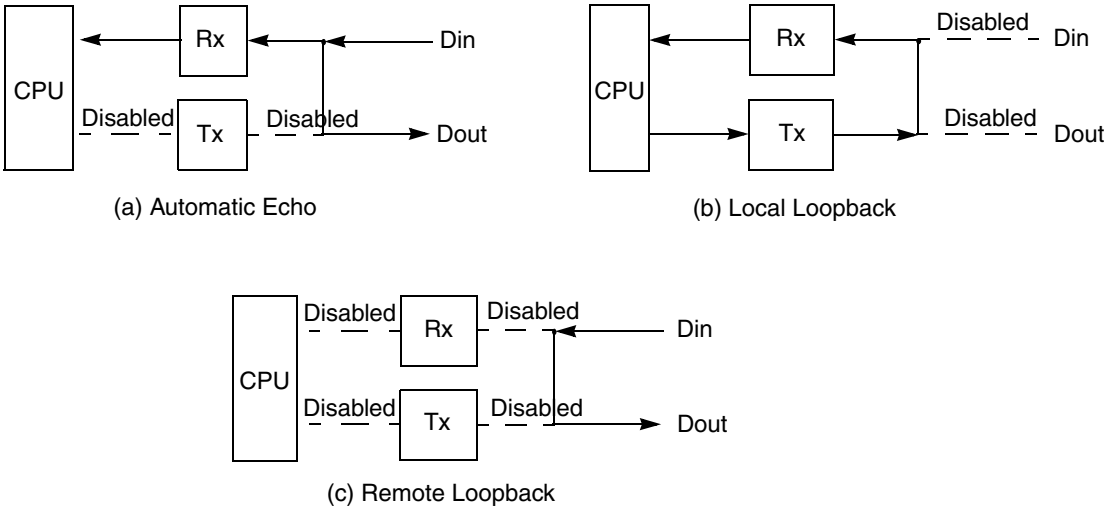

Figure 13-9. GCI/IDL Loopback Mode

13.2.5 GCI/IDL Interrupts

The PLIC module generates two interrupts—the periodic frame interrupt and the aperiodic status interrupt.

13.2.5.1 GCI/IDL Periodic Frame Interrupt

The frame interrupt is a periodic 2-KHz interrupt as shown in Figure 13-10. This is the normal interrupt rate for servicing the incoming and outgoing B and D channels. This service routine must execute in a timely manner. Each of the B- and D-channel transmit and receive registers should be written and read prior to the next 2-KHz interrupt for underrun or overrun conditions to be prevented.

Note that only the active, that is enabled, B- and D-channel receive and transmit registers need to be read and written. B and D channels which are not active need not have their receive and transmit registers read and written.

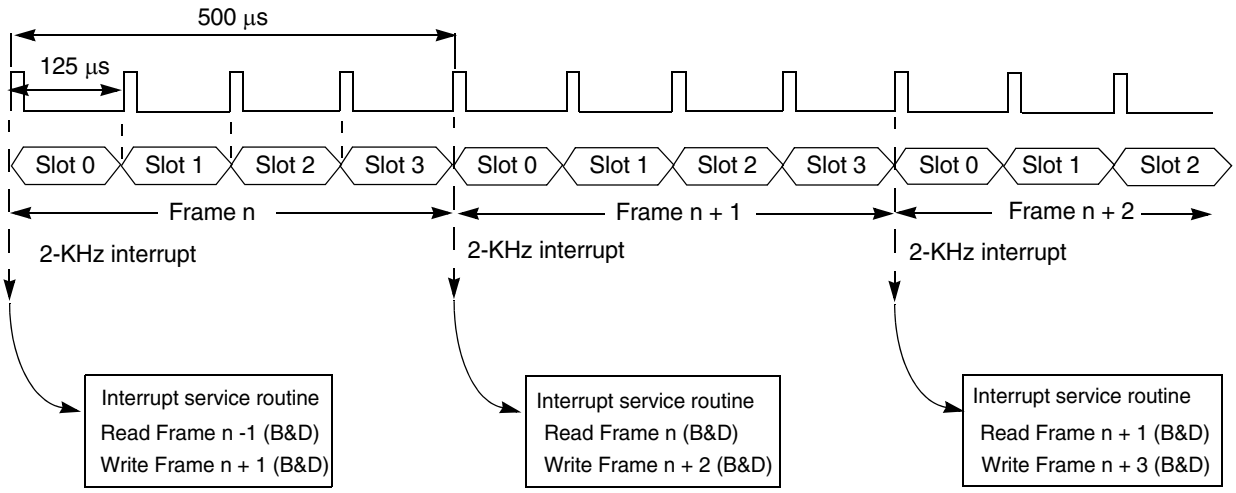

Figure 13-10. Periodic Frame Interrupt

It should be clear from Figure 13-10 that due to the double buffering through the PLIC shadow register, frame (n) is written to the PLIC transmit register during the interrupt service routine of the previous frame, frame (n-1). Similarly on the receive side, frame (n) is read from the PLIC receive register during the interrupt service routine of the following frame, frame (n + 2). Figure 13-10 shows that the minimum delay through the PLIC, when not in loopback mode, is two 2-KHz frames, or 1 mS.

13.2.5.2 GCI Aperiodic Status Interrupt

The aperiodic status interrupt is an interrupt which is driven by a number of conditions. The CPU services this interrupt by reading the aperiodic status register, ASR, and by reading or writing the relevant C/I or monitor channel register or registers which have generated this interrupt. Once read, the interrupt is cleared. Each port and individual interrupts within each port is maskable. The following conditions for each of the ports can trigger this interrupt:

- Monitor channel receive: ASR defines which port or ports have generated a monitor channel receive interrupt. The interrupt service routine must then read the appropriate GMR register or registers to clear the monitor channel receive interrupt.
- Monitor channel transmit: ASR defines which port or ports have generated a monitor channel transmit interrupt. The interrupt service routine must then read the appropriate GMT register or registers to clear the monitor channel transmit interrupt.
- C/I channel receive: ASR defines which port or ports have generated a C/I channel receive interrupt. The interrupt service routine must then read the appropriate GCIR register or registers to clear the C/I channel receive interrupt.
- C/I channel transmit: ASR defines which port or ports have generated a C/I channel transmit interrupt. The interrupt service routine must then read the appropriate GCIT register or registers to clear the C/I channel transmit interrupt.

13.2.5.3 Interrupt Control

There are a number of control mechanisms for the periodic and aperiodic interrupts on the PLIC.

- Clearing the ON/OFF bit in the port configuration register, Section 13.5.7, "Port Configuration Registers (P0CR–P3CR)," turns the port off and masks all periodic and aperiodic interrupts for the affected port.
- Clearing the enable bits, ENB1 or ENB2, in the port configuration register masks the periodic transmit and receive interrupts associated with the respective B1 or B2 channel.
- Specific interrupt enables are provided in each port's ICR. This includes a port interrupt enable, IE, which masks all periodic and aperiodic interrupts. In addition, there are interrupt enables for specific conditions. These are listed in Section 13.5.9, "Interrupt Configuration Registers (P0ICR–P3ICR)."

13.3 PLIC Timing Generator

13.3.1 Clock Synthesis

The PLIC clock generator employs a completely digital, synchronous design which can be used to synthesize a new clock by multiplying an incoming reference clock. This clock generator is not a PLL—it has no VCO or phase comparator.

The frequency multiplication factor is always an integral power of two between 2 and 256 inclusive. The amount of phase jitter exhibited by the synthesized clock increases as the synthesized clock frequency approaches CLKIN's frequency. As a general guide, the maximum generated DCL should be no greater than one-twentieth of CLKIN's frequency. Therefore, given a CLKIN of 66 MHz, the maximum frequency which can be synthesized with acceptable jitter is approximately 3.3 MHz.

The clock generator uses a 14-bit counter to divide CLKIN. This limits the reference clock's minimum frequency to CLKIN divided by 16,384.

To summarize these two points:

- Synthesized clock x 20 < CLKIN(Recommended)
- Reference clock > CLKIN / 16,384(Required)

The control of the clock generator block is provided through the PCSR register detailed in Section 13.5.22, "Clock Select Register (PCSR)."

The process is illustrated by this example. Suppose the following:

- CPU clock = 66 MHz
- Reference clock = 64 KHz
- Synthesized clock = 1.024 MHz

The appropriate reference clock is selected by programming PLCLKSEL[CKI1, CKI0], Section 13.5.22, "Clock Select Register (PCSR)." The multiplication factor is 16 (1.024 MHz / 64 KHz) and is specified by PLCLKSEL[CMULT0-2]. The division ratio between the synthesized clock (GDCL), 1.024 MHz, and the synthesized frame sync (Gen_FSC) must be set. (A Gen_FSC of 8 KHz is assumed). This division ratio is selected by means of FDIV[2-0]. Finally, the clock generation block should be taken out of bypass by setting PCSR[NBP].

The above settings can be made by a single write of the 16-bit value 0x802B to PCSR.

The following restrictions should be observed when using the clock generator module:

- The smallest multiplication factor is 2.
- CLKIN should be significantly greater than (> 20 times) the synthesized clock.

Figure 13-11 and Figure 13-12 show the connectivity and relationship of the timing signals within the PLIC block.

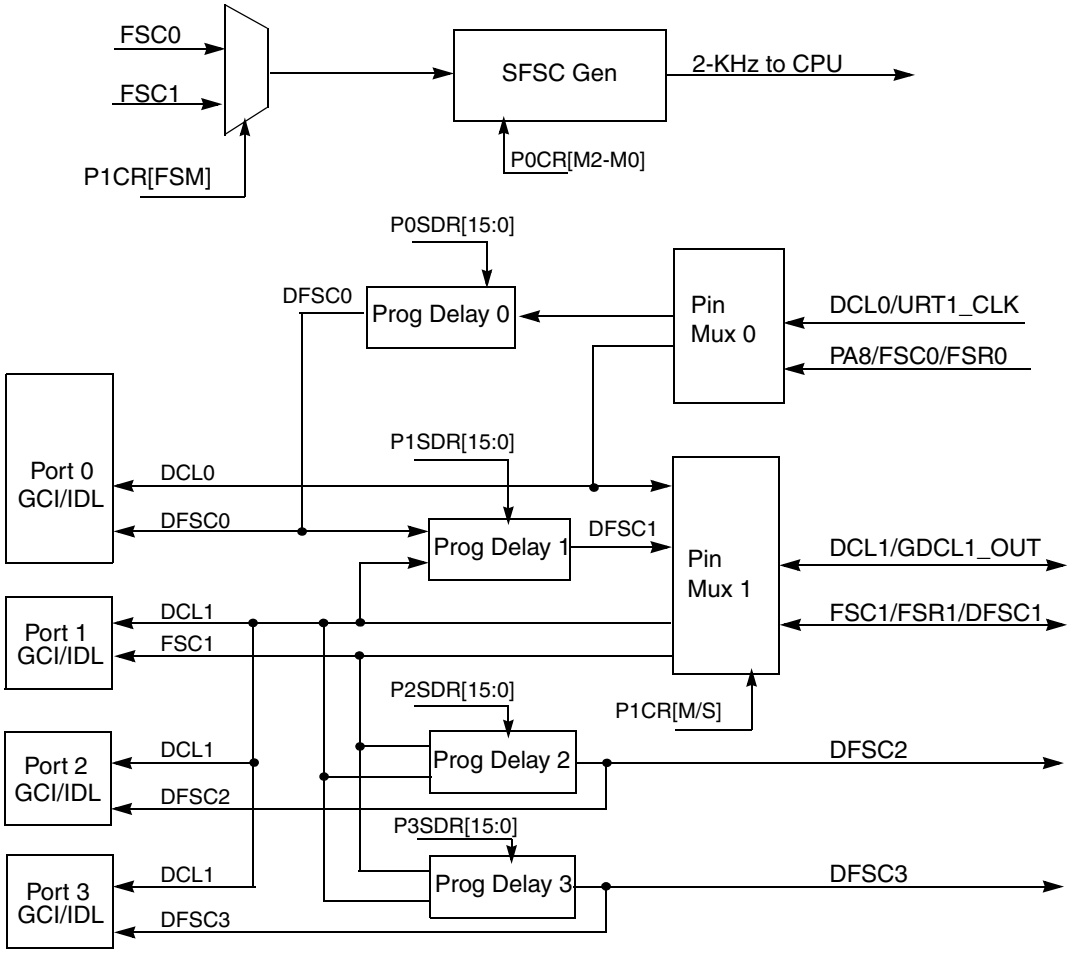

Figure 13-11. PLIC Internal Timing Signal Routing

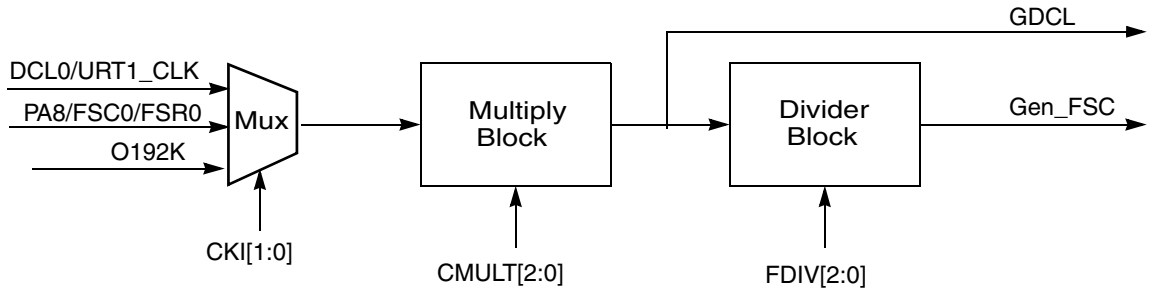

Figure 13-12. PLIC Clock Generator

13.3.2 Super Frame Sync Generation

Figure 13-11 shows the generation of the 2-KHz super frame sync. The choice of either FSC0 or FSC1 is possible using P1CR[FSM]. This allows either the port 0 or port 1 timing to be used to generate the 2-KHz super frame sync interrupt. The SFSC block then divides this accordingly. When P1CR[FSM] is set, FSC1 is the source of the super frame sync. In case P1CR[MS] is 0 (that is, port 1 is in slave mode), the interrupt is ultimately driven by an external source. In case the M/S bit is 1 (that is, port 1 is in master mode), FSC1 ultimately comes from port 0.

13.3.3 Frame Sync Synthesis

Figure 13-11 illustrates the relationships between the various frame sync clocks. DFSC1 is generated through programmable delay 1 referenced to DFSC0. DFSC2 and DFSC3 are generated through programmable delays 2 and 3 referenced to DFSC1. Note well the following:

- P0SDR settings affect DFSC[0–3]
- P1SDR settings affect DFSC[1–3]
- P2SDR settings affect only DFSC2
- P3SDR settings affect only DFSC3

13.4 PLIC Register Memory Map

Table 13-1 lists the PLIC registers with their offset address from MBAR and their default value on reset.

Table 13-1. PLIC Module Memory Map

MBAR Offset	[31:24]	[23:16]	[15:8]	[7:0]
0x0300	Port0 B1 Data Receive (P0B1RR)			
0x0304	Port1 B1 Data Receive (P1B1RR)			
0x0308	Port2 B1 Data Receive (P2B1RR)			
0x030C	Port3 B1 Data Receive (P3B1RR)			
0x0310	Port0 B2 Data Receive (P0B2RR)			
0x0314	Port1 B2 Data Receive (P1B2RR)			
0x0318	Port2 B2 Data Receive (P2B2RR)			
0x031C	Port3 B2 Data Receive (P3B2RR)			
0x0320	Port0 D Data Receive (P0DRR)	Port1 D Data Receive (P1DRR)	Port2 D Data Receive (P2DRR)	Port3 D Data Receive (P3DRR)
0x0328	Port0 B1 Data Transmit (P0B1TR)			
0x032C	Port1 B1 Data Transmit (P1B1TR)			
0x0330	Port2 B1 Data Transmit (P2B1TR)			
0x0334	Port3 B1 Data Transmit (P3B1TR)			
0x0338	Port0 B2 Data Transmit (P0B2TR)			
0x033C	Port1 B2 Data Transmit (P1B2TR)			

Table 13-1. PLIC Module Memory Map (continued)

MBAR Offset	[31:24]	[23:16]	[15:8]	[7:0]
0x0340	Port2 B2 Data Transmit (P2B2TR)			
0x0344	Port3 B2 Data Transmit (P3B2TR)			
0x0348	Port0 D Data Transmit (P0DTR)	Port1 D Data Transmit (P1DTR)	Port2 D Data Transmit (P2DTR)	Port3 D Data Transmit (P3DTR)
0x0350	Port0 GCI/IDL Configuration register (P0CR)		Port1 GCI/IDL Configuration register (P1CR)	
0x0354	Port2 GCI/IDL Configuration register (P2CR)		Port3 GCI/IDL Configuration register (P3CR)	
0x0358	Port0 Interrupt Configuration register (P0ICR)		Port1 Interrupt Configuration register (P1ICR)	
0x035C	Port2 Interrupt Configuration register (P2ICR)		Port3 Interrupt Configuration register (P3ICR)	
0x0360	Port0 GCI monitor Rx (P0GMR)		Port1 GCI monitor Rx (P1GMR)	
0x0364	Port2 GCI monitor Rx (P2GMR)		Port3 GCI monitor Rx (P3GMR)	
0x0368	Port0 GCI monitor Tx (P0GMT)		Port1 GCI monitor Tx (P1GMT)	
0x036C	Port2 GCI monitor Tx (P2GMT)		Port3 GCI monitor Tx (P3GMT)	
0x0370	Reserved	GCI monitor Tx status (PGMTS)	GCI monitor Tx abort (PGMTA)	Reserved
0x0374	Port0 GCI C/I Rx (P0GCIR)	Port1 GCI C/I Rx (P1GCIR)	Port2 GCI C/I Rx (P2GCIR)	Port3 GCI C/I Rx (P3GCIR)
0x0378	Port0 GCI C/I Tx (P0GCIT)	Port1 GCI C/I Tx (P1GCIT)	Port2 GCI C/I Tx (P2GCIT)	Port3 GCI C/I Tx (P3GCIT)
0x037C	Reserved			GCI C/I Tx Status (PGCITSR)
0x0383	Reserved			GCI C/I D-Channel Status (PDCSR)
0x0384	Port0 periodic status (P0PSR)		Port1 periodic status (P1PSR)	
0x0388	Port2 periodic status (P2PSR)		Port3 periodic status (P3PSR)	
0x038C	Aperiodic Interrupt status register (PASR)		Reserved	Loop back Control (PLCR)
0x0390	Reserved		D-Channel Request (PDRQR)	
0x0394	Port0 Sync Delay (P0SDR)		Port1 Sync Delay (P1SDR)	
0x0398	Port2 Sync Delay (P2SDR)		Port3 Sync Delay (P3SDR)	
0x039C	Reserved		Clock Select (PCSR)	

13.5 PLIC Registers

Any bits in the following registers marked 0 have no function. When the register is a read/write register, these bits should be cleared.

Some registers are described that control more than one port. In these cases, parentheses indicates to which port the control bits relate; for example, LM0(0) is the LM0 bit for port 0.

13.5.1 B1 Data Receive Registers (P0B1RR–P3B1RR)

All bits in these registers are read only and are set on hardware or software reset.

The P*n*B1RRs contain the last four frames of data received on channel B1. (P0B1RR is the B1 channel data for port 0, P1B1RR is B1 for port 1, and so on.) The data are packed from the least significant byte (LSB), up to the most significant byte (MSB).

These registers are aligned on longword boundaries from MBAR + 0x300 for P0B1RR to MBAR + 0x30C for P3B1RR. See Section 13.2.3, “GCI/IDL B- and D-Channel Bit Alignment,” for the frame and bit alignment within the 32-bit word.

	31 – 24	23 – 16
Field	Frame 0	Frame 1
Reset	1111_1111	1111_1111
R/W	Read Only	

	15 – 8	7 – 0
Field	Frame 2	Frame 3
Reset	1111_1111	1111_1111
R/W	Read Only	
Addr	MBAR + 0x300 (P0B1RR); 0x304 (P1B1RR); 0x308 (P2B1RR); 0x30C (P3B1RR)	

Figure 13-13. B1 Receive Data Registers P0B1RR–P3B1RR

13.5.2 B2 Data Receive Registers (P0B2RR–P3B2RR)

All bits in these registers are read only and are set on hardware or software reset.

The P*n*B2RR registers contain the last four frames of data received on channel B2. (P0B2RR is the B2 channel data for port 0, P1B2RR is B2 for port 1, and so on.) The data are packed from LSB to MSB.

These registers are aligned on long-word boundaries from MBAR + 0x310 for P0B2RR to MBAR + 0x31C for P3B2RR. See Section 13.2.3, “GCI/IDL B- and D-Channel Bit Alignment,” for the frame and bit alignment within the 32-bit word.

Figure 13-14 shows the B2 receive data registers.

	31 – 24	23 – 16
Field	Frame 0	Frame 1
Reset	1111_1111	1111_1111
R/W	Read Only	

	15 – 8	7 – 0
Field	Frame 2	Frame 3
Reset	1111_1111	1111_1111
R/W	Read Only	
Addr	MBAR + 0x310 (P0B2RR); 0x314 (P1B2RR); 0x318 (P2B2RR); 0x31C (P3B2RR)	

Figure 13-14. B2 Receive Data Registers P0B2RR – P3B2RR

13.5.3 D Data Receive Registers (P0DRR–P3DRR)

All bits in these registers are read-only and are set on hardware or software reset.

The P*n*DRR registers contain the last four frames of D-channel receive data packed from the least significant bit, (lsb), to the most significant bit, (msb), for each of the four physical ports on the MCF5272. P0DRR is the D-channel byte for port 0, P1DRR the D channel for port 1, and so on.

Each of the four byte-addressable registers, P0DRR-P3DRR, are packed to form one 32-bit register, P*n*DRR, located at MBAR + 0x320. P0DRR is located in the MSB of the P*n*DRR register, P3DRR is located in the LSB of the P*n*DRR register.

	31 – 24	23 – 16
Field	P0DRR	P1DRR
Reset	1111_1111	1111_1111
R/W	Read Only	

	15 – 8	7 – 0
Field	P2DRR	P3DRR
Reset	1111_1111	1111_1111
R/W	Read Only	
Addr	MBAR + 0x320 (P0DRR); 0x321 (P1DRR); 0x322 (P2DRR); 0x323 (P3DRR)	

Figure 13-15. D Receive Data Registers P0DRR–P3DRR

13.5.4 B1 Data Transmit Registers (P0B1TR–P3B1TR)

All bits in these registers are read/write and are set on hardware or software reset.

The P*n*B1TR registers contain four frames of transmit data for channel B1. (P0B1TR is the B1 channel transmit data for port 0, P1B1TR is B1 transmit for port 1, and so on.) The data are packed from LSB to MSB.

These registers are aligned on long-word boundaries from MBAR + 0x328 for P0B1TR to MBAR + 0x334 for P3B1TR. See Section 13.2.3, “GCI/IDL B- and D-Channel Bit Alignment,” for the frame and bit alignment within the 32-bit word.

	31 24	23 16
Field	Frame 0	Frame 1
Reset	1111_1111	1111_1111
R/W	Read/Write	

	15 8	7 0
Field	Frame 2	Frame 3
Reset	1111_1111	1111_1111
R/W	Read/Write	
Addr	MBAR + 0x328 (P0B1TR); 0x32C (P1B1TR); 0x330 (P2B1TR); 0x334 (P3B1TR)	

Figure 13-16. B1 Transmit Data Registers P0B1TR–P3B1TR

13.5.5 B2 Data Transmit Registers (P0B2TR–P3B2TR)

All bits in these registers are read/write and are set on hardware or software reset.

The P*n*B2TR registers contain four frames of transmit data for port *n* of channel B2. (P0B2TR is the B2 channel transmit data for port 0, P1B2TR is B2 transmit for port 1, and so on.) The data are packed from LSB to MSB.

These registers are aligned on long-word boundaries from MBAR + 0x338 for P0B2TR to MBAR + 0x344 for P3B2TR. Please refer to Section 13.2.3, “GCI/IDL B- and D-Channel Bit Alignment” for the frame and bit alignment within the 32-bit word.

	31 24	23 16
Field	Frame0	Frame1
Reset	1111_1111	1111_1111
R/W	Read/Write	

	15 8	7 0
Field	Frame2	Frame3
Reset	1111_1111	1111_1111
R/W	Read/Write	
Addr	MBAR + 0x338 (P0B2TR); 0x33C (P1B2TR); 0x340 (P2B2TR); 0x344 (P3B2TR)	

Figure 13-17. B2 Transmit Data Registers P0B2TR–P3B2TR

13.5.6 D Data Transmit Registers (P0DTR–P3DTR)

All bits in these registers are read/write and are set on hardware or software reset.

The PLTD registers contain four frames of D-channel transmit data, packed from lsb to msb, for each of the four physical ports on the MCF5272. P0DTR is the D-channel byte for port 0, P1DTR the D channel for port 1, and so on.

The four byte-addressable 8-bit registers, P0DTR–P3DTR, are packed to form one 32-bit register, PLTD. PLTD is aligned on a long-word boundary at MBAR + 0x348 and can be read as a single 32-bit register. P0DTR is located in the MSB of the PLTD register, P3DTR is located in the LSB of the PLTD register.

	31 – 24	23 – 16
Field	P0DTR	P1DTR
Reset	1111_1111	1111_1111
R/W	Read/Write	

	15 – 8	7 – 0
Field	P2DTR	P3DTR
Reset	1111_1111	1111_1111
R/W	Read/Write	
Addr	MBAR + 0x348 (P0DTR); 0x349 (P1DTR); 0x34A (P2DTR); 0x34B (P3DTR)	

Figure 13-18. D Transmit Data Registers P0DTR–P3DTR

13.5.7 Port Configuration Registers (P0CR–P3CR)

	15	14–12	11	10	9	8	7	6	5	4	3	2	1	0
P0CR	ON/OFF	M	—	G/S	—	ACT	—	—	—	—	SHB2	SHB1	ENB2	ENB1
P1CR	ON/OFF	— M	M/S	G/S	FSM	ACT	—	—	—	—	SHB2	SHB1	ENB2	ENB1
P2CR	ON/OFF	— — —	—	—	—	—	—	—	—	—	SHB2	SHB1	ENB2	ENB1
P3CR	ON/OFF	— — —	—	—	—	—	DMX	—	—	—	SHB2	SHB1	ENB2	ENB1
Reset	0000_0000_0000_0000													
R/W	Read/Write													
Addr	MBAR + 0x350 (P0CR); 0x352 (P1CR); 0x354 (P2CR); 0x356 (P3CR)													

Figure 13-19. Port Configuration Registers (P0CR–P3CR)

P*n*CR are registers containing configuration information for each of the four ports on the MCF5272.

All bits in these registers are read/write and are cleared on hardware or software reset.

Table 13-2. P0CR–P3CR Field Descriptions

Bits	Name	Description
15	ON/OFF	0 Port is off and in a steady state condition. In this state, the B and D channels on the transmit side are high impedance when in GCI/IDL. The receive registers are all set. In IDL and GCI modes with the port in this state, all periodic and aperiodic interrupts associated with the port are disabled. 1 Switches on the port for operation in the configured mode.
14–12	M	Mode. Selects between various modes of operation as described below. Note: bit 14 is relevant to port 0 only. The IDL modes on the PLIC only support short frame sync. **Port 1-3 Port 0** 000 IDL8IDL8 001 IDL10IDL10 010 GCIGCI 011 ReservedReserved 10*x* ReservedReserved 11*x* ReservedReserved
11	M/S	Master/Slave. Defines the direction of the DCL1 and FSC1 pins. 0 DCL1 and FSC1 are inputs and are sourced from an external master. Note: This bit is relevant to port 1 only, as port 0 is always in slave mode. 1 enables DCL1 and FSC1 to be outputs, that is, the MCF5272 drives DCL1 and FSC1.
10	G/S	GCI/SCIT. 0 The normal mode of GCI is used (i.e. no D-channel contention control). 1 Selects SCIT mode of operation for the GCI interfaces.
9	FSM	Frame Sync Master. 0 Default reset value. 2-KHz interrupt is generated from port 0. 1 Port 1 FSC/FSR is used to generate the 2-KHz interrupt.
8	ACT	GCI Activation. 0 Default reset value. 1 Causes Dout to transition to a logic low for the respective port. This bit is only operational when the port is in GCI mode. Setting the ACT bit in any other mode has no effect. It is the responsibility of the CPU to clear the ACT bit when normal operation on Dout is required. This bit is intended to be used to request activation from the upstream DCL/FSC driver. Periodic interrupts commence as soon as the upstream device generates DCL, provided the appropriate interrupts, such as IE, B1RIE, and so on, are enabled for the port.
7	DMX	Data multiplex. 0 port 3 Dout and Din are multiplexed onto Dout1 and Din1. 1 enables port 3 Dout and Din to be connected to dedicated output and input pins, DOUT3 and DIN3.
3	SHB2	B2 channel shift direction. 0 B2 channel data is received/transmitted msb first. The msb-first convention is often used for communication with PCM CODECs and converters. 1 B2 channel data is received/transmitted lsb first. The lsb-first convention is used when the data is to be HDLC encoded.
2	SHB1	B1 channel shift direction. See SHB2.
1	ENB2	Enable B2 data channel. 0 The B2 channel is disabled and all periodic interrupts in both receive and transmit directions are disabled. The behavior of Din and Dout in this state is shown below. **Mode / Din / Dout** IDL / All 1s / High Impedance GCI / Operational (data on Din visible) / Open drain 1 Enables the B2 data channel for the respective port.
0	ENB1	Enable B1 data channel. See ENB2.

13.5.8 Loopback Control Register (PLCR)

All bits in this register are cleared on hardware or software reset.

The PLCR is an 8-bit register containing the configuration information for all four ports on the MCF5272.

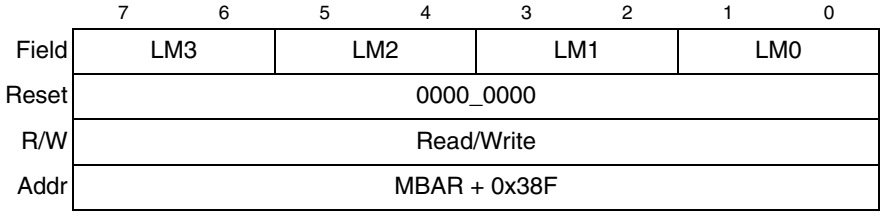

	7	6	5	4	3	2	1	0
Field	LM3		LM2		LM1		LM0	
Reset	0000_0000							
R/W	Read/Write							
Addr	MBAR + 0x38F							

Figure 13-20. Loopback Control Register (PLCR)

Table 13-3. PLCR Field Description

Bits	Name	Description
7-6	LM3	Loopback mode control, port 3. 00 Normal 01 Auto-echo 10 Local Loopback 11 Remote Loopback
5-4	LM2	Loopback mode control, port 2. See LM3.
3-2	LM1	Loopback mode control, port 1. See LM3.
1-0	LM0	Loopback mode control, port 0. See LM3.

NOTE

In loopback mode, the respective port must be enabled (using P*n*CR[ON/OFF]) along with the B1 and B2 channels (using P*n*CR[ENB1, ENB2]) and the D channel (using PDRQR[DCNTI] when in IDL mode, for instance). Also, if more than one of ports 1, 2, or 3 are programmed in loopback mode, it is necessary to program the appropriate frame sync function using the sync delay registers discussed in Section 13.5.21, “Sync Delay Registers (P0SDR–P3SDR).”

13.5.9 Interrupt Configuration Registers (P0ICR–P3ICR)

All bits in these registers are read/write and are cleared on hardware or software reset.

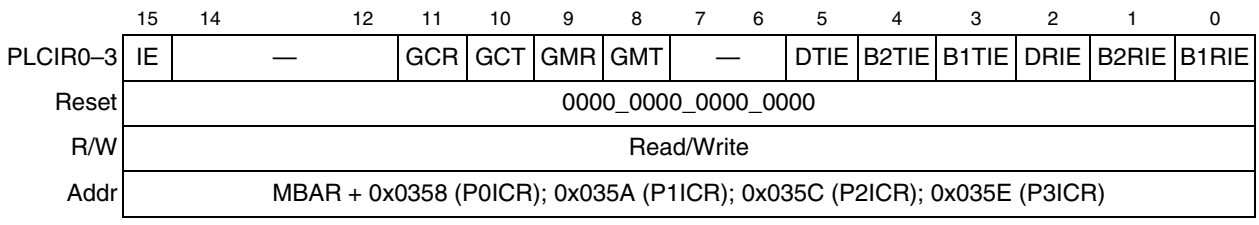

	15	14	12	11	10	9	8	7	6	5	4	3	2	1	0
PLCIR0–3	IE	—		GCR	GCT	GMR	GMT	—		DTIE	B2TIE	B1TIE	DRIE	B2RIE	B1RIE
Reset	0000_0000_0000_0000														
R/W	Read/Write														
Addr	MBAR + 0x0358 (P0ICR); 0x035A (P1ICR); 0x035C (P2ICR); 0x035E (P3ICR)														

Figure 13-21. Interrupt Configuration Registers (P0ICR–P3ICR)

The P*n*ICR registers contain interrupt configuration bits for each of the four ports on the MCF5272.

Table 13-4. P0ICR–P3ICR Field Descriptions

Bits	Name	Description
15	IE	Interrupt enable. Allows the port to generate interrupts to the CPU. When cleared, the IE bit masks all periodic and aperiodic interrupts associated with the respective port.
14–12	—	Reserved, should be cleared.
11	GCR	Interrupt enable for the C/I channel receive. 0 Interrupt masked 1 Interrupt enabled. When set, an interrupt is enabled which occurs when the corresponding GCR status bit is set.
10	GCT	C/I channel transmit Interrupt enable. 0 Interrupt masked 1 Interrupt enabled.
9	GMR	Interrupt enable for the monitor channel receive. 0 Interrupt masked 1 Interrupt enabled.
8	GMT	Interrupt enable for the monitor channel transmit. 0 Interrupt masked 1 Interrupt enabled.
7–6	—	Reserved, should be cleared.
5	DTIE	D transmit interrupt enable. 0 Interrupt masked 1 Interrupt enabled.Interrupt occurs when the corresponding P*n*PSR[DTDE] or P*n*PSR[DTUE] is set.
4	B2TIE	B2 transmit interrupt enable. 0 Interrupt masked 1 Interrupt enabled. Interrupt occurs when the corresponding P*n*PSR[B2TDE] or P*n*PSR[B2TUE] is set.
3	B1TIE	B1 transmit interrupt enable. 0 Interrupt masked 1 Interrupt enabled. Interrupt occurs when the corresponding P*n*PSR[B1TDE] or P*n*PSR[B1TUE] is set.
2	DRIE	D receive interrupt enable. 0 Interrupt masked 1 Interrupt enabled. Interrupt occurs when the corresponding P*n*PSR[DRDF] or P*n*PSR[DROE] is set.
1	B2RIE	B2 receive interrupt enable. 0 Interrupt masked 1 Interrupt enabled. Interrupt occurs when the corresponding P*n*PSR[B2RDF] or P*n*PSR[B2ROE] is set.
0	B1RIE	B1 receive interrupt enable. 0 Interrupt masked 1 Interrupt enabled.Interrupt occurs when the corresponding P*n*PSR[B1RDF] or P*n*PSR[B1ROE] is set.

13.5.10 Periodic Status Registers (P0PSR–P3PSR)

All bits in these registers are read only and are set on hardware or software reset.

	15–12	11	10	9	8	7	6	5	4	3	2	1	0
P0PSR–3	—	DTUE	B2TUE	B1TUE	DROE	B2ROE	B1ROE	DTDE	B2TDE	B1TDE	DRDF	B2RDE	B1RDF
Reset	0000_0000_0000_0000												
R/W	Read Only												
Addr	MBAR + 0x384 (P0PSR); 0x386 (P1PSR); 0x388 (P2PSR); 0x38A (P3PSR)												

Figure 13-22. Periodic Status Registers (P0PSR–P3PSR)

P*n*PSR are 16-bit registers containing the interrupt status information for the B- and D-channel transmit and receive registers for each of the four ports on the MCF5272.

Table 13-5. P0PSR–P3PSR Field Descriptions

Bits	Name	Description
15–12	—	Reserved, should be cleared.
11	DTUE	D data transmit underrun error. This bit is set when the data in the PLTD transmit data register for the respective port was transferred to the transmit shadow register, which was already empty indicated by DTDE. DTUE is automatically cleared, when the P*n*PSR register has been read by the CPU.
10	B2TUE	B2 data transmit underrun error. This bit is set when the data in the P*n*B2TR transmit data register for the respective port was transferred to the transmit shadow register, which was already empty indicated by B2TDE. B2TUE is automatically cleared when the P*n*PSR register has been read by the CPU.
9	B1TUE	B1 data transmit underrun error. This bit is set when the data in the P*n*B1TR transmit data register for the respective port was transferred to the transmit shadow register, which was already empty indicated by B1TDE. B1TUE is automatically cleared when the P*n*PSR register has been read by the CPU.
8	DROE	D-Channel data receive overrun error. This bit is set when the data in the D receive shadow register for the respective port has been transferred to the receive data register P*n*DRR, which was already full indicated by DRDF. DROE is automatically cleared when the P*n*PSR register has been read by the CPU.
7	B2ROE	B2 data receive overrun error. This bit is set when the data in the B2 receive shadow register for the respective port has been transferred to the receive data register P*n*B2RR, which was already full indicated by B2RDF. B2ROE is automatically cleared when the P*n*PSR register has been read by the CPU.
6	B1ROE	B1 data receive overrun error. This bit is set when the data in the B1 receive shadow register for the respective port has been transferred to the receive data register P*n*B1RR, which was already full indicated by B1RDF. B1ROE is automatically cleared when the P*n*PSR register has been read by the CPU. Note: Overrun and Underrun conditions are caused by the B and/or D-channel receive or transmit data registers not being read or written prior to a 2-KHz super frame arriving.
5	DTDE	D data transmit data empty. This bit is set when the data in the PLTD transmit data register for the respective port has been transferred to the transmit shadow register. This bit is cleared when the CPU writes data to PLTD.
4	B2TDE	B2 data transmit data empty. This bit is set when the data in the P*n*B2TR transmit data register for the respective port has been transferred to the transmit shadow register. This bit is cleared when the CPU writes data to P*n*B2TR.
3	B1TDE	B1 data transmit data empty. This bit is set when the data in the P*n*B1TR transmit data register for the respective port has been transferred to the transmit shadow register. This bit is cleared when the CPU writes data to P*n*B1TR.

Table 13-5. P0PSR–P3PSR Field Descriptions

Bits	Name	Description
2	DRDF	D receive data full. This bit indicates that the D receive data register for the respective port is full. DRDF is cleared when the CPU reads the receive data register P*n*DRR.
1	B2RDF	B2 receive data full. This bit indicates that the B2 receive data register for the respective port is full. B2RDF is cleared when the CPU reads the receive data register P*n*B2RR.
0	B1RDF	B1 receive data full. This bit indicates that the B1 receive data register for the respective port is full. B1RDF is cleared when the CPU reads the receive data register P*n*B2RR.

13.5.11 Aperiodic Status Register (PASR)

All bits in this register are read only and are set on hardware or software reset.

	15	14	13	12	11	10	9	8	7	6	5	4	3	2	1	0
Field	GCR 3	GCT 3	GMR 3	GMT 3	GCR 2	GCT 2	GMR 2	GMT 2	GCR 1	GCT 1	GMR 1	GMT 1	GCR 0	GCT 0	GMR 0	GMT 0
Reset	0000_0000_0000_0000															
R/W	Read Only															
Addr	MBAR + 0x38C															

Figure 13-23. Aperiodic Status Register (PASR)

The PASR register is a 16-bit register containing the aperiodic interrupt status information for the C/I and monitor channel transmit and receive registers for all four ports on the MCF5272. An aperiodic interrupt condition remains asserted as long as any one of the bits within the PASR register is set.

Table 13-6. PASR Field Descriptions

Bits	Name	Description
15, 11, 7, 3	GCR*n*	GCI C/I received. When set, this bit indicates that valid new data has been written to a GCI C/I receive register. An interrupt is queued when this bit is set if the GCR interrupt enable bit has been set in the corresponding P*n*ICR register. The GCR bit and associated interrupt are automatically cleared when the corresponding P*n*GCIR register has been read by the CPU.
14, 10, 6, 2	GCT*n*	GCI C/I transmitted. When set, this bit indicates that a C/I register is empty. An interrupt is queued when this bit is set if the GCT interrupt enable bit has been set in the corresponding P*n*ICR register. The GCT bit and associated interrupt are automatically cleared when the PGCITSR register has been read by the CPU.
13, 9, 5, 1	GMR*n*	GCI monitor received. When set, this bit indicates that data has been written to a monitor channel receive register. An interrupt is queued when this bit is set if the GMR interrupt enable bit has been set in the corresponding P*n*ICR register. The GMR bit and associated interrupt are automatically cleared when the corresponding P*n*GMR register has been read by the CPU.
12, 8, 4, 0	GMT*n*	GCI monitor transmitted. When set, this bit indicates that the monitor channel transmit register is empty. An interrupt is queued when this bit is set if the GMT interrupt enable bit has been set in the corresponding P*n*ICR register. The GMT bit and associated interrupt are automatically cleared when the PGMTS register has been read by the CPU.

13.5.12 GCI Monitor Channel Receive Registers (P0GMR–P3GMR)

All bits in these registers are read only and are initialized to 0x00FF on hardware or software reset.

P*n*GMR are 16-bit registers containing the received monitor channel bits for each of the four receive ports on the MCF5272.

A byte of monitor channel data received on a certain port is put into an associated register using the format shown in Figure 13-24. A maskable interrupt is generated when a byte is written into any of these four registers.

	15–11	10	9	8	7–0
Field	—	EOM	AB	MC	M
Reset	0000_0000_1111_1111				
R/W	Read Only				
Addr	MBAR + 0x360 (P0GMR); 0x362 (P1GMR); 0x364 (P2GMR); 0x366 (P3GMR)				

Figure 13-24. GCI Monitor Channel Receive Registers (P0GMR–P3GMR)

Table 13-7. P0GMR–P3GMR Field Descriptions

Bits	Name	Description
15–11	—	Reserved, should be cleared.
10	EOM	End of message. 0 Default at reset. 1 Indicates to the CPU that an end-of-message condition has been recognized on the E bit. EOM is automatically cleared when the P*n*GMR register has been read by the CPU.
9	AB	Abort. 0 Default at reset. 1 Indicates that the GCI controller has recognized an abort condition and is acknowledging the abort. It is automatically cleared by the CPU when the P*n*GMR register has been read.
8	MC	Monitor change. 0 Default at reset. 1 Indicates to the CPU that the monitor channel data byte written to the respective P*n*GMR register has changed and that the data is available for processing. Automatically cleared by the CPU when the P*n*GMR register has been read. Clearing this bit by reading this register also clears the aperiodic GMR interrupt.
7–0	M	Monitor channel data byte.

13.5.13 GCI Monitor Channel Transmit Registers (P0GMT–P3GMT)

All bits in these registers are read/write and are cleared on hardware or software reset.

The P*n*GMT registers are 16 bit register containing the control and monitor channel bits to be transmitted for each of the four ports on the MCF5272.

A byte of monitor channel data to be transmitted on a certain port is put into an associated register using the format shown in Figure 13-25. A maskable interrupt is generated when this byte of data has been successfully transmitted.

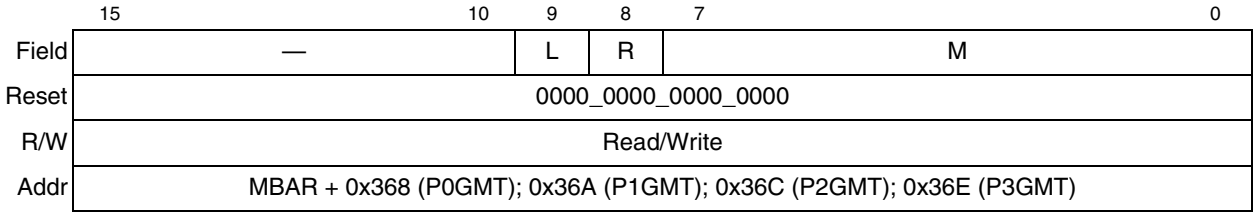

Figure 13-25. GCI Monitor Channel Transmit Registers (P0GMT–P3GMT)

Table 13-8. P0GMT–P3GMT Field Descriptions

Bits	Name	Description
15–10	—	Reserved, should be cleared.
9	L	Last. 0 Default reset value 1 Set by the CPU. Indicates to the monitor channel controller to transmit the end of message signal on the E bit. Both P*n*GMT[L] and P*n*GMT[R] must be set for the monitor channel controller to send the end of message signal. P*n*GMT[M7:0] are ignored and 0xFF is sent with the end of message condition necessitating sending the monitor channel information using P*n*GMT[R] to control the monitor channel transmitter, followed at the end of the frame by setting P*n*GMT[L] and P*n*GMT[R]. The L bit is automatically cleared by the GCI controller.
8	R	Ready. 0 Default reset value. 1 Set by the CPU. Indicate to the monitor channel controller that a byte of data is ready for transmission. Automatically cleared by the GCI controller when it generates a transmit acknowledge (ACK bit in PGMTS register) or when the L bit is reset.
7–0	M	Monitor channel data byte. Written by the CPU when a byte is ready for transmission.

13.5.14 GCI Monitor Channel Transmit Abort Register (PGMTA)

All bits in this register are read/write and are cleared on hardware or software reset.

The PGMTA register contains the abort control bits for each of the four ports on the MCF5272 for the transmit monitor channel.

	7	6	5	4	3 … 0
Field	AR3	AR2	AR1	AR0	—
Reset	0000_0000				
R/W	Read/Write				
Addr	MBAR + 0x372				

Figure 13-26. GCI Monitor Channel Transmit Abort Register (PGMTA)

Table 13-9. PGMTA Field Descriptions

Bits	Name	Description
7	AR3	Abort request, port 3. 0 Default reset value. 1 Set by the CPU, this bit causes the monitor channel controller to transmit the end of message signal on the E bit. Automatically cleared by the monitor channel controller on receiving an abort, that is, when PGMTS[AB] is set.
6	AR2	Abort request, port 2. See AR3.
5	AR1	Abort request, port 1. See AR3.
4	AR0	Abort request, port 0. See AR3.
3–0	—	Reserved, should be cleared.

13.5.15 GCI Monitor Channel Transmit Status Register (PGMTS)

All bits in this register are read only and are cleared on hardware or software reset.

The PGMTS register contains the monitor channel status bits for each of the four transmit ports on the MCF5272.

	7	6	5	4	3	2	1	0
Field	ACK3	ACK2	ACK1	ACK0	AB3	AB2	AB1	AB0
Reset	0000_0000							
R/W	Read Only							
Addr	MBAR + 0x371							

Figure 13-27. GCI Monitor Channel Transmit Status Register (PGMTS)

Table 13-10. PGMTS Field Descriptions

Bits	Name	Description
7	ACK3	Acknowledge, port 3. 0 Default reset value. 1 Indicates to the CPU that the GCI controller has transmitted the previous monitor channel information. Automatically cleared by the CPU reading the register. The clearing of this bit by reading this register also clears the aperiodic GMT interrupt.
6	ACK2	Acknowledge, port 2. See ACK3.
5	ACK1	Acknowledge, port 1. See ACK3.
4	ACK0	Acknowledge, port 0. See ACK3.
3	AB3	Abort, port 3. 0 Default reset value. 1 Indicates to the CPU that the GCI controller has aborted the current message. This bit is automatically cleared by the CPU reading the register. When the GCI controller sets this bit, it also clears the AR bit in the PGMTA register, the ACK bit in the GMTS register, and the L and R bits in the P*n*GMT register.
2	AB2	Abort, port 2. See AB3.
1	AB1	Abort, port 1. See AB3.
0	AB0	Abort, port 0. See AB3.

13.5.16 GCI C/I Channel Receive Registers (P0GCIR–P3GCIR)

All bits in these registers are read only and are cleared on hardware or software reset.

The P*n*GCIR registers contain the received C/I bits for one of each of the four ports on the MCF5272.

	31–29	28	27	26	25	24	23–21	20	19	18	17	16
Field	—	F	C3	C2	C1	C0	—	F	C3	C2	C1	C0
Chan	P0GCIR						P1GCIR					
Reset	0000_0000_0000_0000											
R/W	Read Only											

	15–13	12	11	10	9	8	7–5	4	3	2	1	0
Field	—	F	C3	C2	C1	C0	—	F	C3	C2	C1	C0
Chan	P2GCIR						P3GCIR					
Reset	0000_0000_0000_0000											
R/W	Read Only											
Addr	MBAR + 0x374 (P0GCIR), 0x375 (P1GCIR), 0x376 (P2GCIR), 0x377 (P3GCIR)											

Figure 13-28. GCI C/I Channel Receive Registers (P0GCIR–P3GCIR)

Table 13-11. P0GCIR–P3GCIR Field Descriptions

Bits	Name	Description
31–29, 23–21, 15–13, 7–5	—	Reserved, should be cleared.
28, 20, 12, 4	F	Full. This bit is set by the C/I channel controller to indicate to the CPU that new C/I channel data has been received and is available for processing. It is automatically cleared by a CPU read. The clearing of this bit by reading this register also clears the aperiodic GCR interrupt.
27–24, 19–16, 11–8, 3–0	C3–C0	C/I bits. These four bits are received on the GCI or SCIT channel 0. When a change in the C/I data value is received in two successive frames, it is interpreted as being valid and is passed on to the CPU, via this register. A maskable interrupt is generated when data is written into any of the four available positions.

13.5.17 GCI C/I Channel Transmit Registers (P0GCIT–P3GCIT)

All bits in these registers are read/write and are cleared on hardware or software reset.

The P*n*GCIT registers are 8-bit registers containing the monitor channel bits to be transmitted for each of the four ports on the MCF5272.

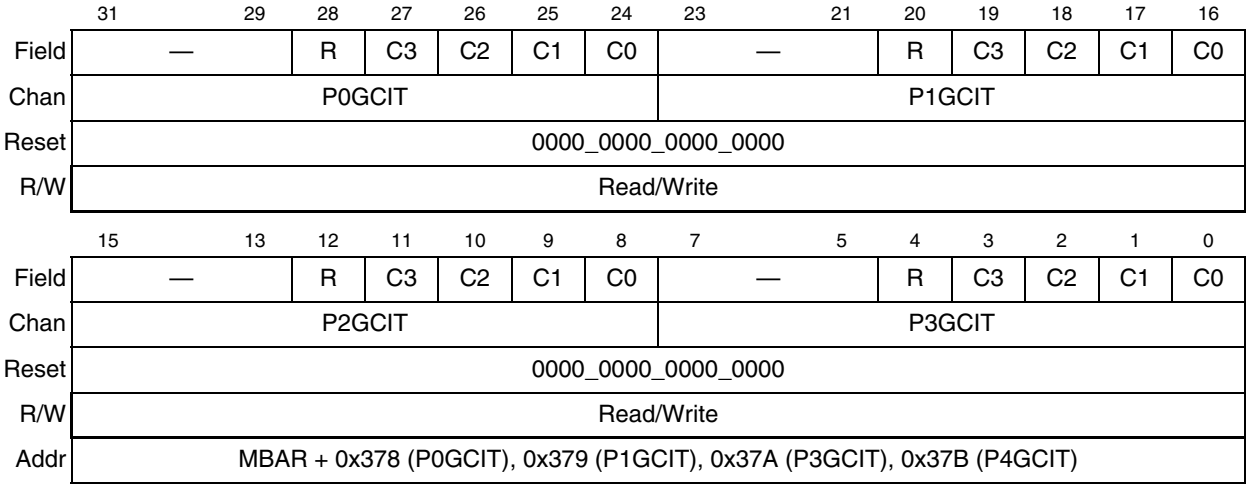

Figure 13-29. GCI C/I Channel Transmit Registers (P0GCIT–P3GCIT)

Table 13-12. P0GCIT–P3GCIT Field Descriptions

Bits	Name	Description
31–29, 23–21, 15–13, 7–5	—	Reserved, should be cleared.
28, 20, 12, 4	R	Ready. This bit is set, by the CPU to indicate to the C/I channel controller that data is ready for transmission. The transition of this bit from a 0 to a 1 starts the C/I state machine which responds with the ACK bit once transmission of two successive C/I words is complete. This bit is automatically cleared by the GCI controller when it generates a transmit acknowledge (ACK bit in PGCITSR register). The clearing of this bit by reading this register also clears the aperiodic GCT interrupt.
27–24, 19–16, 11–8, 3–0	C3–C0	C/I bits. The CPU writes C/I data to be transmitted, on the GCI or SCIT channel 0, into these positions. The CPU must ensure that this data is not overwritten before it has been transmitted the required minimum amount of times, that is, so any change is detected and confirmed by a receiver. A maskable interrupt is generated when this data has been successfully transmitted

13.5.18 GCI C/I Channel Transmit Status Register (PGCITSR)

All bits in this register are read only and are cleared on hardware or software reset.

The PGCITSR register is an 8-bit register containing the C/I channel status bits for each of the four transmit ports on the MCF5272.

	7–4	3	2	1	0
Field	—	ACK3	ACK2	ACK1	ACK0
Reset	0000_0000				
R/W	Read Only				
Addr	MBAR + 0x37F				

Figure 13-30. GCI C/I Channel Transmit Status Register (PGCITSR)

Table 13-13. PGCITSR Field Descriptions

Bits	Name	Description
7–4	—	Reserved, should be cleared.
3	ACK3	Acknowledge, port 3. 0 Default reset value. 1 Set by the C/I channel controller to indicate that the previous C/I data has been transmitted in two successive C/I words. The ACK bit is automatically cleared by the CPU when the PGCITSR register has been read.
2	ACK2	Acknowledge, port 2. See ACK3.
1	ACK1	Acknowledge, port 1. See ACK3.
0	ACK0	Acknowledge, port 0. See ACK3.

13.5.19 D-Channel Status Register (PDCSR)

All bits in this register are read only and are cleared on hardware or software reset. The register is also cleared after a read operation.

The PDCSR register contains the D-channel status bits for all four ports on the MCF5272.

	7	6	5	4	3	2	1	0
Field	—		DG1	DG0	DC3	DC2	DC1	DC0
Reset	0000_0000							
R/W	Read Only							
Addr	MBAR + 0x383							

Figure 13-31. D-Channel Status Register (PDCSR)

Table 13-14. PDCSR Field Descriptions

Bits	Name	Description
7–6	—	Reserved, should be cleared.
5	DG1	D-channel grant, port 1. 0 Default reset value. 1 In IDL mode, indicates the status of DGRANT. When the external DGNT has a logic 1, the corresponding DG1/DG0 bit is set. In GCI mode, DG1 and DG0 reflects the inverted value of the SCIT bit. The significance of this bit is the same in IDL or GCI mode, that is, in IDL mode when the DG bit is set, the D channel is granted. In GCI mode when the DG bit is set, this corresponds to the GO condition. In both cases the D channel is granted and communication may commence.
4	DG0	D-channel grant, port 0. See DG1.
3	DC3	D-channel change, port 3. 0 Default reset value. 1 Indicates that a value other than 0xFF (all ones) exists the D-channel receive register.
2	DC2	D-channel change, port 2. See DC3.
1	DC1	D-channel change, port 1. See DC3.
0	DC0	D-channel change, port 0. See DC3.

13.5.20 D-Channel Request Register (PDRQR)

All bits in this read/write register are cleared on hardware or software reset.

The PDRQR register contains D-channel control bits for all four ports on the MCF5272.

	15–12	11	10	9	8	7–2	1–0
Field	—	SHDD(1)	DCNTI(1)	SHDD(0)	DCNTI(0)	—	DRQ
Reset	0000_0000_0000_0000						
R/W	Read/Write						
Addr	MBAR + 0x392						

Figure 13-32. D-Channel Request Registers (PDRQR)

Table 13-15. PDRQR Field Descriptions

Bits	Name	Description
15–12	—	Reserved, should be cleared.
11, 9	SHDD	D-channel shift direction. 0 D-channel data is msb first. The first bit received is assumed to be the most significant bit and is loaded into the msb position of the D-channel receive register for the respective port. SHDD(1) configures the shift direction for ports 1, 2 and 3, SHDD(0) configures the shift direction for port 0. 1 D-channel data is lsb first for the D channel. The first bit received is assumed to be the least significant bit and is loaded into the lsb position of the D-channel receive register for the respective port.
10, 8	DCNTI	D-channel control ignore. Allows the D-Channel contention function to be ignored. 00 contention active on both ports 01 ignore contention on port 0 10 ignore contention on port 1 11 ignore contention on both ports
7–2	—	Reserved, should be cleared.
1–0	DRQ	The value written to these bits is driven onto the DREQ pins associated with port 0 and port 1. When set, a logic high, 1, is driven on to the corresponding pin.

13.5.21 Sync Delay Registers (P0SDR–P3SDR)

All bits in these registers are read/write and are cleared on hardware or software reset.

The P*n*SDR registers contain the frame sync delay bits for each of the four ports on the MCF5272.

	15	14	13 10	9 0
Field	FSW1	FSW0	—	SD
Reset	0000_0000_0000_0000			
R/W	Read/Write			
Addr	MBAR + 0x394 (P0SDR); 0x396 (P1SDR); 0x398 (P2SDR); 0x39A (P3SDR)			

Figure 13-33. Sync Delay Registers (P0SDR–P3SDR)

Table 13-16. P0SDR–P3SDR Field Descriptions

Bits	Name	Description
15–14	FSW[1–0]	Frame sync width. Sets the width, in clock cycles, of the output frame sync pulse. 00 Frame sync width = 1 01 Frame sync width = 2 10 Frame sync width = 8 11 Frame sync width = 16
13–10	—	Reserved, should be cleared.
9–0	SD	Sync delay. Range: 0–1023. Sets the delay, in DCL clock cycles, for DFSC3–DFSC0. The delay period should be doubled in GCI mode because GCI has two clock cycles per data bit. See Section 13.3, “PLIC Timing Generator,” for further information.

NOTE

If a sync delay value of 0 is specified, that is, P*n*SDR[SD] = 0x000, then the programmable delay block is transparent. When bypassed, the input frame sync passes directly to the output, making the frame-sync-width function defined by P*n*SDR[FSW] unavailable.

The 8-bit frame-sync-width should not be confused with long frame sync mode. The PLIC only supports short frame sync in IDL8 and IDL10 bit modes for interfacing to external transceivers.

13.5.22 Clock Select Register (PCSR)

All bits in this register are read/write and are cleared on hardware or software reset.

PCSR controls the PLIC clock generation block. Please refer to Section 13.3, "PLIC Timing Generator," for certain restrictions on the use of the clock generation block.

	15	14–8	7–6	5–3	2–0
Field	NBP	—	CKI	FDIV	CMULT
Reset	0000_0000_0000_0000				
R/W	Read/Write				
Addr	MBAR + 0x39E				

Figure 13-34. Clock Select Register (PCSR)

Table 13-17. PCSR Field Descriptions

Bits	Name	Description
15	NBP	Non-bypass mode select for the clock generation module. 0 The clock generation module is bypassed. Gen_FSC and GDCL are connected to FSC0 and DCL0. 1 Selects non-bypassed mode. Gen_FSC and GDCL are synthesized from the incoming FSC0 or DCL0.
14–8	—	Reserved, should be cleared.
7–6	CKI	Clock select Input. Selects the source clock for the clock generation block. 00 DCL0 01 FSC0 1*x* Reserved
5–3	FDIV	FSC divide. Sets the divide ratio between GDCL and Gen_FSC. 000 ÷4 001 ÷8 010 ÷16 011 ÷32 100 ÷64 101 ÷128 110 ÷192 111 ÷256
2–0	CMULT	Clock multiplication ratio. Sets the ratio of the reference clock frequency to the GDCL frequency. 000 x 2 001 x 4 010 x 8 011 x 16 100 x 32 101 x 64 110 x 128 111 x 256

13.6 Application Examples

This section provides examples for applications.

13.6.1 Introduction

The following section describes the initialization of the PLIC ports and gives three application examples demonstrating the connection of multiple transceivers or CODECs to the PLIC module.

13.6.2 PLIC Initialization

The ports on the PLIC module of the MCF5272 require a number of registers to be configured after power-on reset and prior to use. The following are the steps necessary for initializing the ports.

The port configuration registers, P*n*CR, and the interrupt configuration register, P*n*ICR, must be initialized before using any port.

13.6.2.1 Port Configuration Example

- Specify which ports are active.
- Specify the operational modes, IDL8, IDL10, and so on, for the active ports, P*n*CR[M].
- If GCI mode is specified in P*n*CR[M], select whether GCI SCIT mode is to be used, P*n*CR[G/S]
- If port 1 is used, program whether the 2-KHz frame interrupt is to be derived from port 0 or port 1, P*n*CR[FSM].
- If port 1 is used, program whether it receives as inputs DCL and FSC or whether it drives these signals as outputs.
- If the port is in GCI mode, the P*n*CR[ACT] bit may be set if GCI Activation should be requested.
- If port 3 is used, program the P*n*CR[DMX] bit if this port is routed through physical interface 3 (DIN3/DOUT3).
- Program the shift direction for the B1 and B2 channels, P*n*CR[SHB1–SHB2], to specify msb or lsb first.
- Program P*n*CR[ENB1–ENB2] to specify whether B1 or B2 is enabled at initialization.

The following example shows a basic configuration of port 1, assuming the following:

- Port 1 is active as slave using IDL10 mode
- 2-KHz frame interrupt derived from port 1
- msb first on B1 and B2
- B1 and B2 disabled.

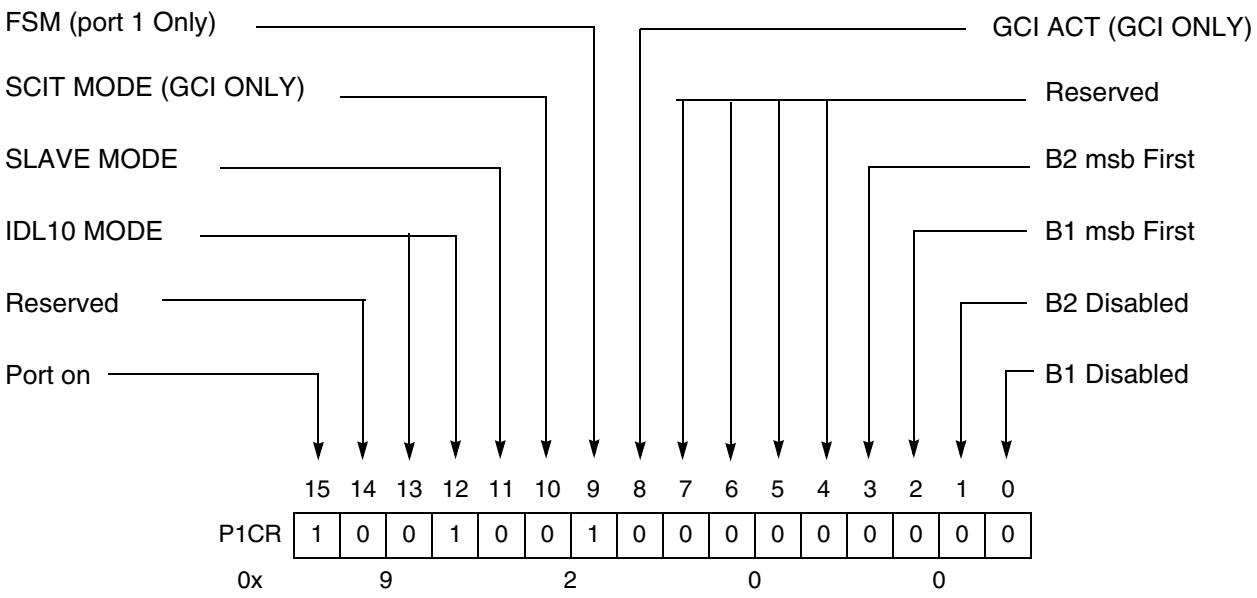

Figure 13-35. Port 1 Configuration Register (P1CR)

The programming of the P1CR register in the above example is achieved with the following ColdFire code sequence assuming the equates and init sections include the following:

```
equates and init:
...
Module_Regs_Addr  EQU      0x00300000    ;address of on-chip registers
P1CR              EQU      0x352         ;offset of P1CR register
P1ICR             EQU      0x35A
...
move.l   #Module_Regs_Addr, A5           ;reference register from A5
...
move.w   #0x9200,d0                      ;port 1 config ON, IDL10, SLAVE, port1 FSM
                                         ;msb first on B1 and B2, B1 and B2 disabled
move.w   d0,P1CR(A5)                     ;write to P1CR register
```

The above code segment is an example only.

13.6.2.2 Interrupt Configuration Example

The P*n*ICR registers should be configured according to the specific interrupts, periodic and aperiodic, required for each port. In addition, the port interrupt enable, (P*n*ICR[IE]) should be set for each active port prior to receiving interrupts.

Assuming port 1 is configured as in the above example then the following configuration would enable periodic interrupts on port 1 with only the D channel active.

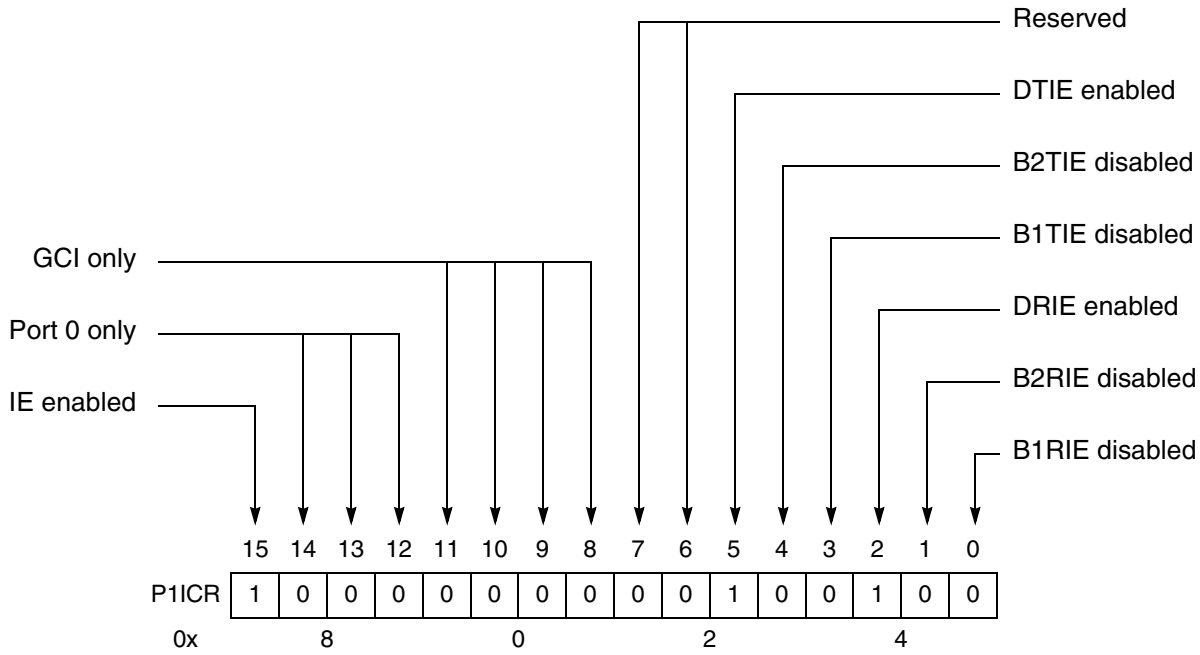

Figure 13-36. Port 1 Interrupt Configuration Register (P1ICR)

The programming of the P1ICR in the above example is achieved with the following ColdFire code sequence assuming the equates and init sections as in the previous P1CR example:

```
...
move.w          #0x8024,d0      ; port 1 IE and D-channel interrupts enabled
move.w          d0,P1ICR(A5)    ; write value to PnICR
...
```

13.6.3 Example 1: ISDN SOHO PBX with Ports 0, 1, 2, and 3

In this example, all four ports are used to connect an external transceiver and six CODECs. Port 0 and port 1 are programmed in slave mode. An external transceiver, MC145574, is connected to port 0. Port 1, 2, and 3 are used to connect up to six external PCM CODECs.

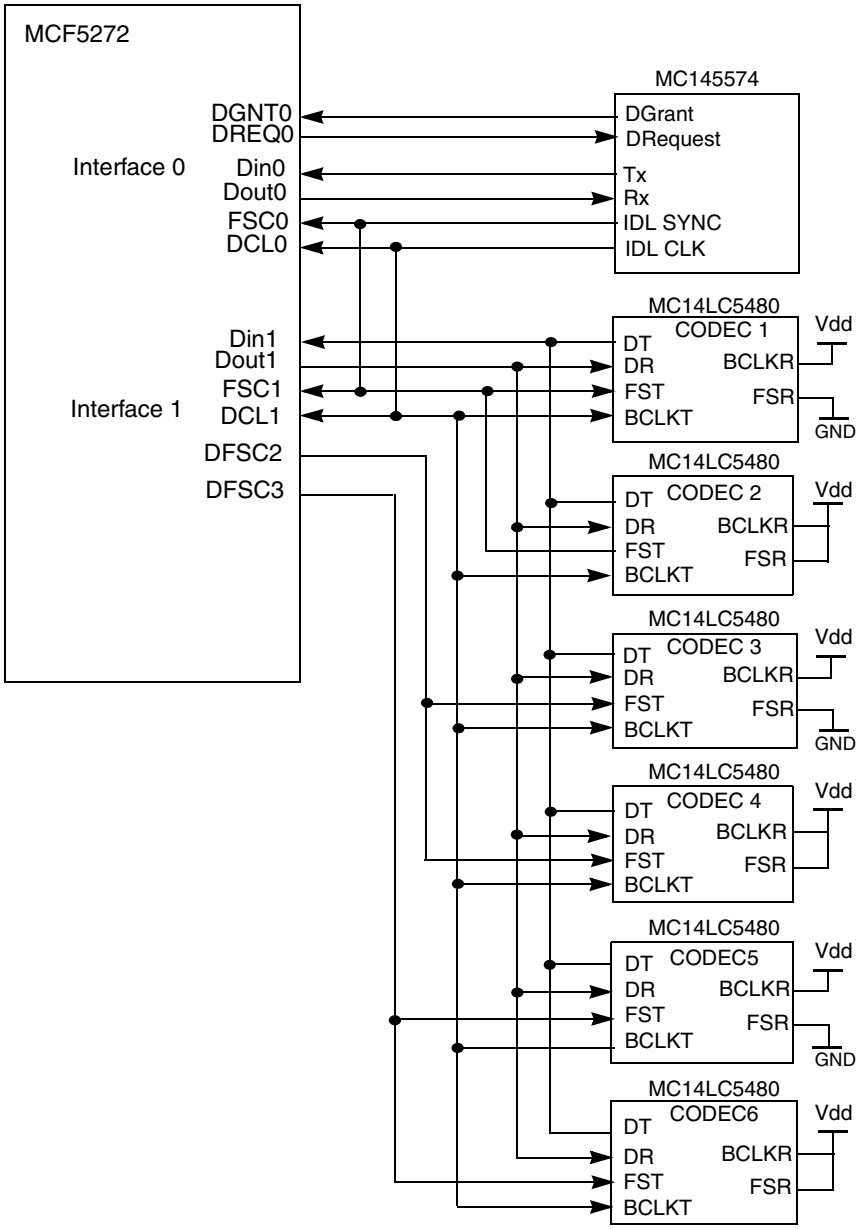

Figure 13-37. ISDN SOHO PABX Example

In the previous example, Freescale's MC14LC5480 CODECs and MC145574 S/T transceiver are shown. The S/T transceiver in this example is connected to port 0 and the FSC0 frame sync signal is used exclusively for synchronizing the data on the transceiver's IDL interface. CODECs 1 and 2 are connected to frame sync 1, FSC1. CODECs 3 and 4 are connected to DFSC2 which is the output of programmable

delay 2. Programmable delay 2 generates a delayed frame sync with reference to FSC1. Similarly CODECs 5 and 6 are connected to DFSC3 which is the output of programmable delay 3. Programmable delay 3 generates a delayed frame sync also with reference to FSC1. The MC14LC5480 CODECs, when in IDL mode, may be programmed using the FSR pin, to select whether the CODEC is receiving and transmitting on the B1 or the B2 time slot. See the MC14LC5480 data sheet for further information.

Figure 13-38 shows the IDL bus timing relationship of the CODECs and MC145574 transceiver when in standard IDL2 10-bit mode with a common frame sync.

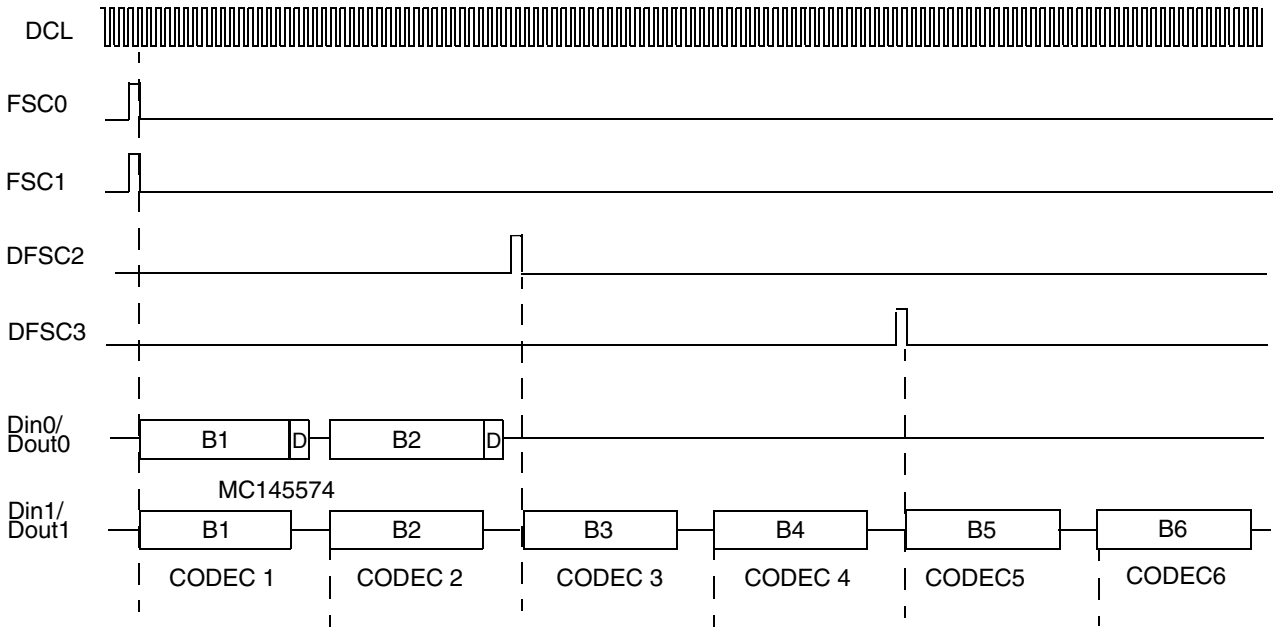

Figure 13-38. Standard IDL2 10-Bit Mode

The S/T transceiver is connected to port 0, Din0/Dout0. The DCL and FSC generated from the S/T transceiver are connected to DCL0, FSC0, and also feed port 1, DCL1, and FSC1 because port 1 is synchronized to these S/T generated timing signals. The six CODECs are connected to Din1 and Dout1. To provide six discrete 64-Kbps channels on the port 1 IDL interface, the delayed frame syncs are programmed to synchronize the CODECs on non-overlapping time slots. CODEC 1 transmits and receives in the B1 time slot. CODEC 2 transmits and receives in the B2 time slot, which starts 10 DCL cycles later, and so on for the other CODECs. CODECs 3 and 4 are synchronized to DFSC2 which is generated 20 DCL cycles after FSC1 by loading the programmable delay 2 register with 0x0014. The DFSC3 signal synchronizes CODECs 5 and 6. DFSC3 is generated 40 DCL cycles after FSC1 by loading the programmable delay 3 register with 0x0028.

Only the port 0 D-channel is used in this example; DREQ0 and DGNT0 are connected to the S/T transceiver.

The GCI mode of operation is analogous. In GCI mode, port 0 can be configured to support the SCIT channel.

13.6.4 Example 2: ISDN SOHO PBX with Ports 1, 2, and 3

In this example, port 0 is not used. The port 0 pins are multiplexed with UART0 and in this example, port 0 is used to connect to an external transceiver to provide an RS232 interface. Port 1 is programmed in slave mode and an external U (or S/T) transceiver is connected to port 1. Port 2 and port 3 are used to connect up to four external PCM CODECs.

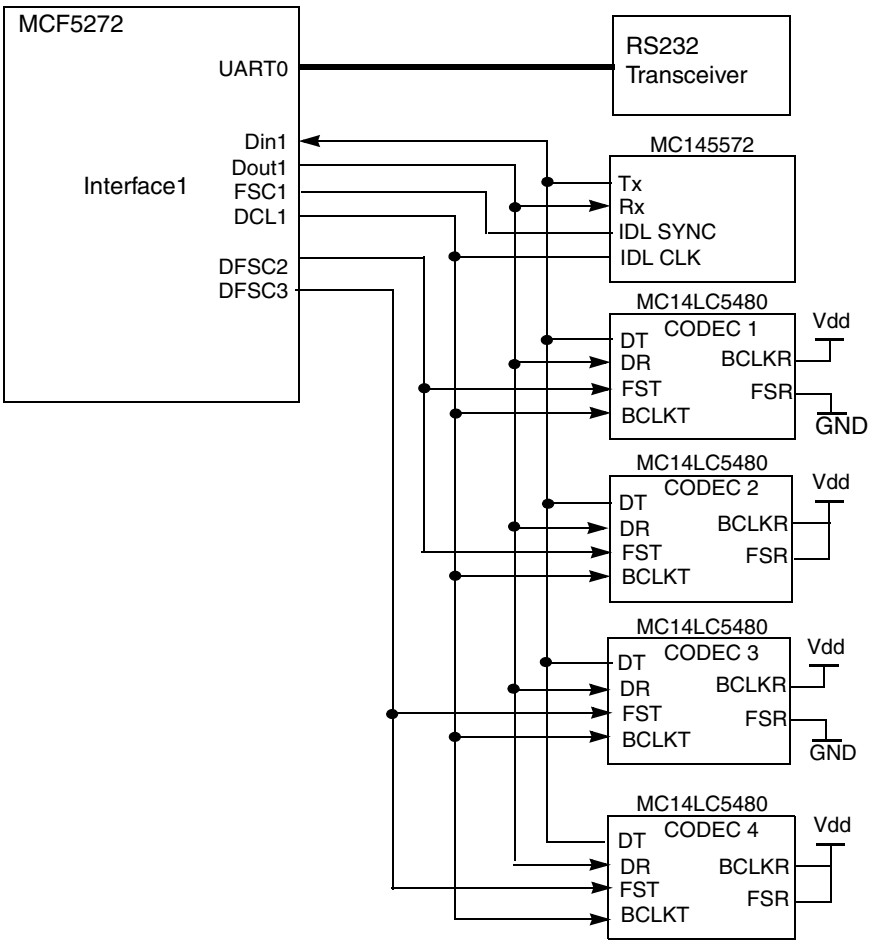

Figure 13-39. ISDN SOHO PABX Example

In the above example, Freescale's MC14LC5480 CODECs and MC145572 U transceiver are shown. The U transceiver in this example is connected to port 1 and the FSC1 frame sync signal is used exclusively for synchronizing the data on the U transceiver's IDL interface. CODECs 1 and 2 are connected to delayed frame sync 2, DFSC2, which is the output of programmable delay 2. Programmable delay 2 generates a delayed frame sync with reference to FSC1. Similarly CODECs 3 and 4 are connected to DFSC3 which is the output of programmable delay 3. Programmable delay 3 generates a delayed frame sync also with reference to FSC1. The MC14LC5480 CODECs, when in IDL mode, may be programmed using the FSR pin to select whether the CODEC is receiving and transmitting on the B1 or the B2 time slot (see MC14LC5480 data sheet for further information).

Figure 13-40 shows the IDL bus timing relationship of the CODECs and U transceiver when in standard IDL2 10-bit mode with a common frame sync.

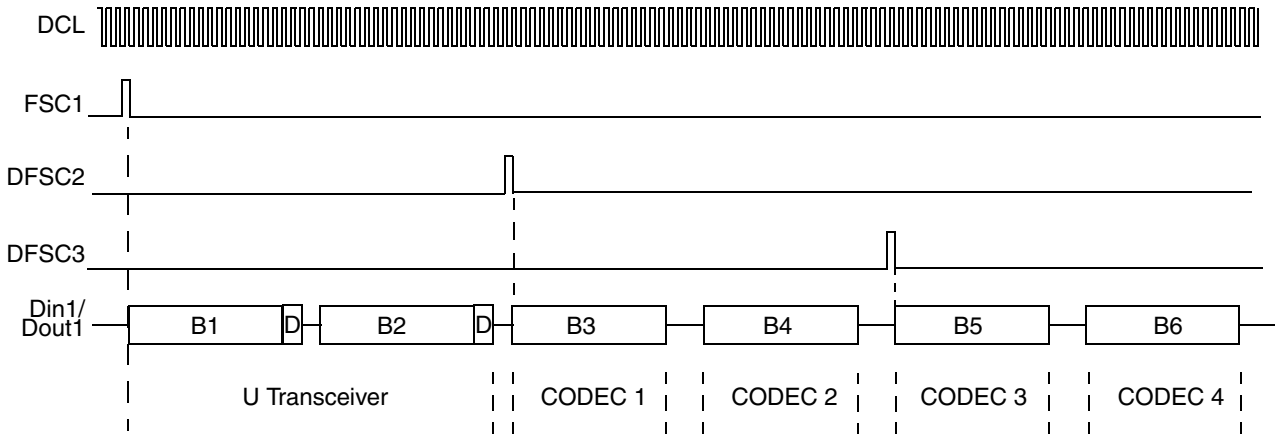

Figure 13-40. Standard IDL2 10-Bit Mode

In the above example, CODEC 1 transmits and receives in the B3 time slot once the U transceiver has completed the D channel. From the rising edge of FSC1, this is at least 19 DCL clocks later. In Figure 13-40, a short, optional delay, is shown between the end of the D channel and the start of the B3 channel. For example, let us say this is 1 DCL clocks long. This defines the programmable delay 1 value to be 20, (19 + 1), or 0x0014. The DFSC3 signal synchronizes CODECs 3 and 4, and the rising edge of this frame sync occurs 20 clocks after DFSC2, therefore 40 DCL clocks after FSC1. This defines the value for programmable delay 3 to be 40, (19 + 1 + 20), or 0x0028.

13.6.5 Example 3: Two-Line Remote Access with Ports 0 and 1

In this example, ports 0 and 1 are connected to two S/T transceivers. Ports 0 and 1 are programmed in slave mode. Ports 2 and 3 are not used, and may be disabled.

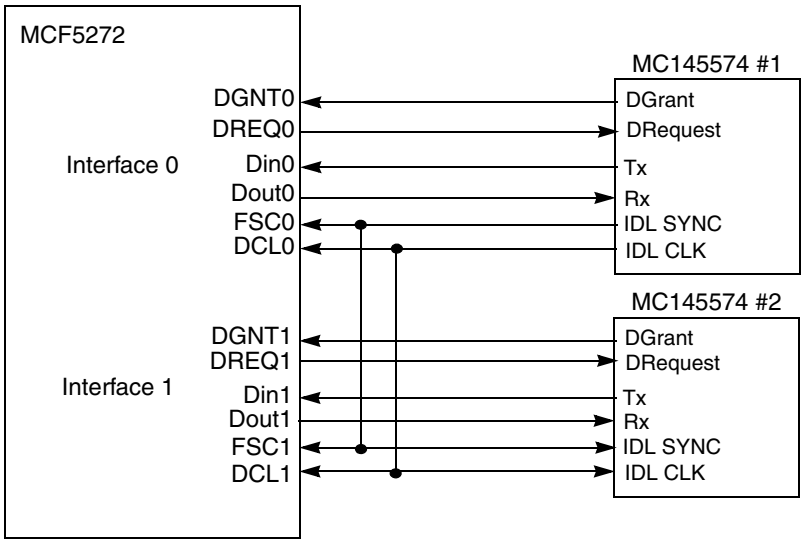

Figure 13-41. Two-Line Remote Access

Two of Freescale's MC145574 S/T transceivers are shown connected to ports 0 and 1. The frame sync control signal FSC0 is connected to S/T transceiver one, while FSC1 is connected to transceiver two.

Figure 13-42 shows an example of the IDL bus timing relationship of the S/T transceivers when in standard IDL2 8-bit mode with a common frame sync.

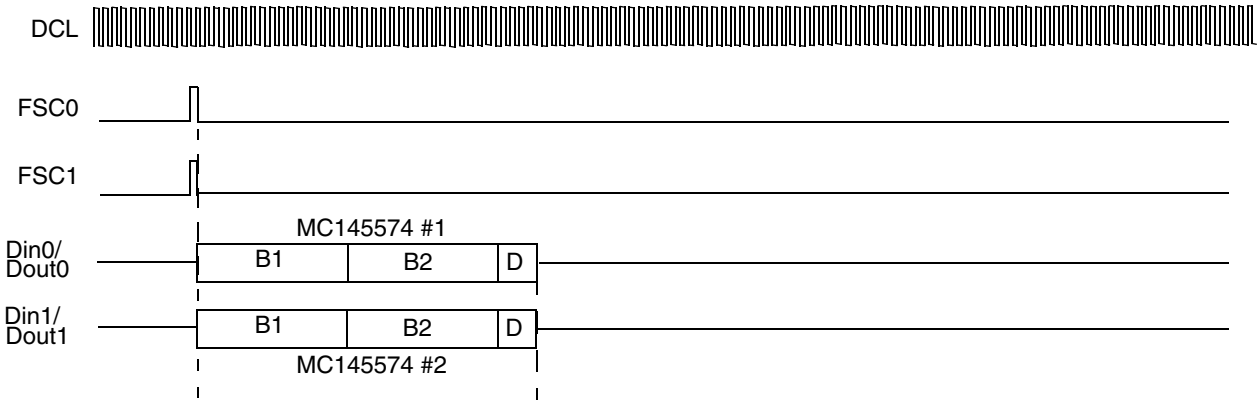

Figure 13-42. Standard IDL2 8-Bit Mode

Chapter 14
Queued Serial Peripheral Interface (QSPI) Module

This chapter describes the queued serial peripheral interface (QSPI) module. Following a feature-set overview is a description of operation including details of the QSPI's internal RAM organization. The chapter concludes with the programming model and a timing diagram.

14.1 Overview

The queued serial peripheral interface module provides a serial peripheral interface with queued transfer capability. It allows users to enqueue up to 16 transfers at once, eliminating CPU intervention between transfers. Transfer RAMs in the QSPI are indirectly accessible using address and data registers.

Functionality is very similar, but not identical, to the QSPI portion of the QSM (queued serial module) implemented in the MC68332.

14.2 Features

- Programmable queue to support up to 16 transfers without user intervention
- Supports transfer sizes of 8 to 16 bits in 1-bit increments
- Four peripheral chip-select lines for control of up to 15 devices
- Baud rates from 129.4 Kbps to 16.5 Mbps at 66 MHz
- Programmable delays before and after transfers
- Programmable clock phase and polarity
- Supports wraparound mode for continuous transfers

14.3 Module Description

The QSPI module communicates with the integrated ColdFire CPU using internal memory mapped registers located starting at MBAR + 0xA0. See also Section 14.5, "Programming Model." A block diagram of the QSPI module is shown in Figure 14-1.

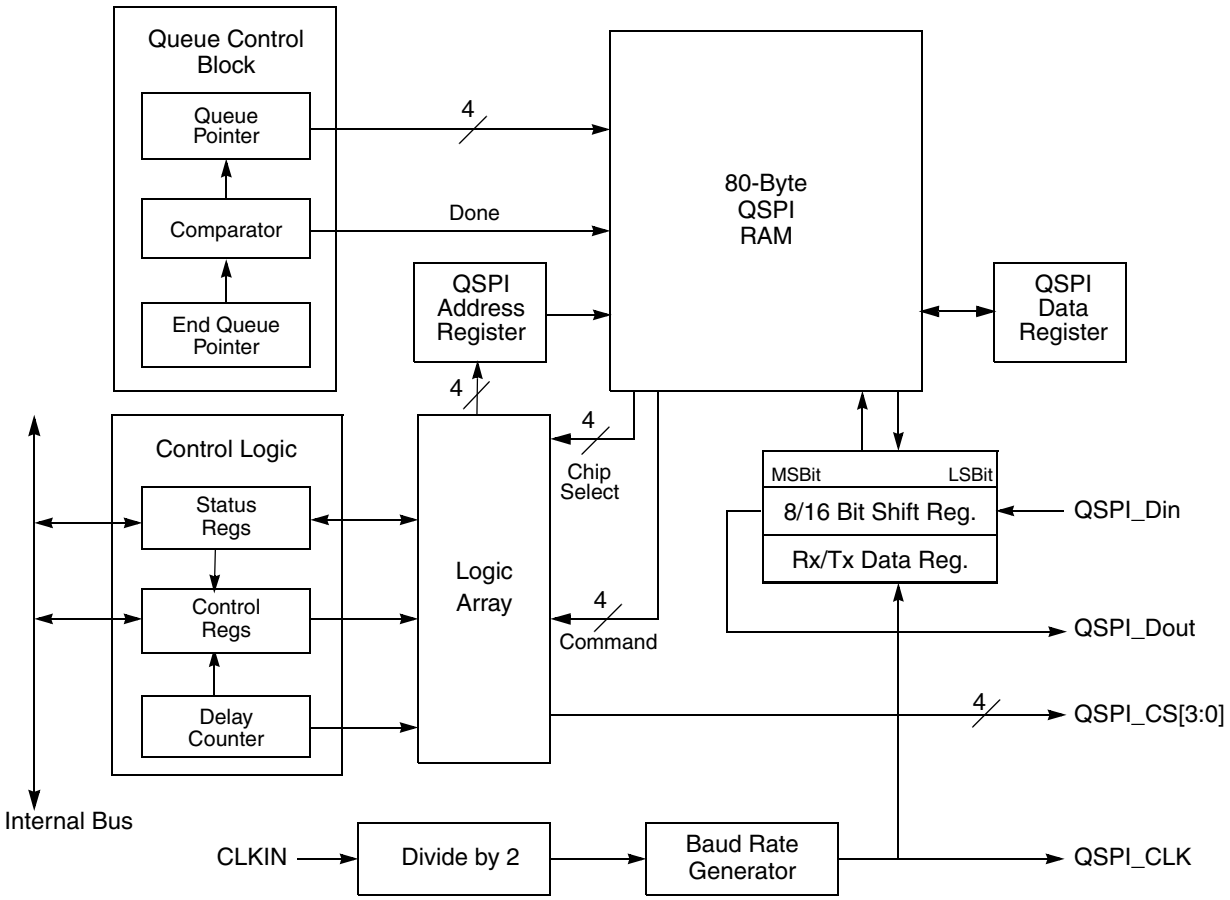

Figure 14-1. QSPI Block Diagram

14.3.1 Interface and Pins

The module provides as many as 15 ports and a total of seven signals: QSPI_Dout, QSPI_Din, QSPI_CLK, QSPI_CS0, QSPI_CS1, QSPI_CS2, and QSPI_CS3.

Peripheral chip-select signals, QSPI_CS[0:3], are used to select an external device as the source or destination for serial data transfer. Signals are asserted at a logic level corresponding to the value of the QSPI_CS[3:0] bits in the command RAM whenever a command in the queue is executed. More than one chip-select signal can be asserted simultaneously.

Although QSPI_CS[0:3] will function as simple chip selects in most applications, up to 15 ports can be selected by decoding them with an external 4-to-16 decoder.

Note that chip selects QSPI_CS[3:1] are multiplexed with other pin functions. QSPI_Dout, QSPI_CLK, and QSPI_CS0 are multiplexed with MCF5272 configuration inputs that only function during system reset.

Table 14-1. QSPI Input and Output Signals and Functions

Signal Name	Hi-Z or Actively Driven	Function
QSPI Data Output (QSPI_Dout)	Configurable	Serial data output from QSPI
QSPI Data Input (QSPI_Din)	N/A	Serial data input to QSPI
Serial Clock (QSPI_CLK)	Actively driven	Clock output from QSPI
Peripheral Chip Selects (QSPI_CS[3:0])	Actively driven	Peripheral selects

14.3.2 Internal Bus Interface

Because the QSPI module only operates in master mode, the master bit in the QSPI mode register (QMR[MSTR]) must be set for the QSPI to function properly. The QSPI can initiate serial transfers but cannot respond to transfers initiated by other QSPI masters.

14.4 Operation

The QSPI uses a dedicated 80-byte block of static RAM accessible both to the module and the CPU to perform queued operations. The RAM is divided into three segments as follows:

- 16 command control bytes (command RAM)
- 16 transmit data words, (transfer RAM)
- 16 receive data words (transfer RAM)

RAM is organized so that 1 byte of command control data, 1 word of transmit data, and 1 word of receive data comprise 1 queue entry, 0x0–0xF.

The user initiates QSPI operation by loading a queue of commands in command RAM, writing transmit data into transmit RAM, and then enabling the QSPI data transfer. The QSPI executes the queued commands and sets the completion flag in the QSPI interrupt register (QIR[SPIF]) to signal their completion. Optionally, QIR[SPIFE] can be enabled to generate an interrupt.

The QSPI uses four queue pointers. The user can access three of them through fields in QSPI wrap register (QWR):

- The new queue pointer, QWR[NEWQP], points to the first command in the queue.
- An internal queue pointer points to the command currently being executed.
- The completed queue pointer, QWR[CPTQP], points to the last command executed.
- The end queue pointer, QWR[ENDQP], points to the final command in the queue.

The internal pointer is initialized to the same value as QWR[NEWQP]. During normal operation, the following sequence repeats:

1. The command pointed to by the internal pointer is executed.
2. The value in the internal pointer is copied into QWR[CPTQP].
3. The internal pointer is incremented.

Execution continues at the internal pointer address unless the QWR[NEWQP] value is changed. After each command is executed, QWR[ENDQP] and QWR[CPTQP] are compared. When a match occurs, QIR[SPIF] is set and the QSPI stops unless wraparound mode is enabled. Setting QWR[WREN] enables wraparound mode.

QWR[NEWQP] is cleared at reset. When the QSPI is enabled, execution begins at address 0x0 unless another value has been written into QWR[NEWQP]. QWR[ENDQP] is cleared at reset but is changed to show the last queue entry before the QSPI is enabled. QWR[NEWQP] and QWR[ENDQP] can be written at any time. When the QWR[NEWQP] value changes, the internal pointer value also changes unless a transfer is in progress, in which case the transfer completes normally. Leaving QWR[NEWQP] and QWR[ENDQP] set to 0x0 causes a single transfer to occur when the QSPI is enabled.

Data is transferred relative to QSPI_CLK which can be generated in any one of four combinations of phase and polarity using QMR[CPHA, CPOL]. Data is transferred most significant bit (msb) first. The number of bits transferred defaults to eight, but can be set to any value from 8 to 16 by writing a value into the BITSE field of the command RAM, QCR[BITSE] .

14.4.1 QSPI RAM

The QSPI contains an 80-byte block of static RAM that can be accessed by both the user and the QSPI. This RAM does not appear in the MCF5272 memory map because it can only be accessed by the user indirectly through the QSPI address register (QAR) and the QSPI data register (QDR). The RAM is divided into three segments with 16 addresses each:

- receive data RAM, the initial destination for all incoming data
- transmit data RAM, a buffer for all out-bound data
- command RAM, where commands are loaded

The transmit and command RAM are write-only by the user. The receive RAM is read-only by the user. Figure 14-2 shows the RAM configuration. The RAM contents are undefined immediately after a reset.

The command and data RAM in the QSPI is indirectly accessible with QDR and QAR as 48 separate locations that comprise 16 words of transmit data, 16 words of receive data and 16 bytes of commands.

A write to QDR causes data to be written to the RAM entry specified by QAR[ADDR] and causes the value in QAR to increment. Correspondingly, a read at QDR returns the data in the RAM at the address specified by QAR[ADDR]. This also causes QAR to increment. A read access requires a single wait state.

Relative Address	Register	Function
0x00	QTR0	Transmit RAM
0x01	QTR1	
.	.	16 bits wide
.	.	
.	.	
0x0F	QTR15	
0x10	QRR0	Receive RAM
0x11	QRR1	
.	.	16 bits wide
.	.	
.	.	
0x1F	QRR15	
0x20	QCR0	Command RAM
0x21	QCR1	
.	.	8 bits wide
.	.	
.	.	
0x2F	QCR15	

Figure 14-2. QSPI RAM Model

14.4.1.1 Receive RAM

Data received by the QSPI is stored in the receive RAM segment located at 0x10 to 0x1F in the QSPI RAM space. The user reads this segment to retrieve data from the QSPI. Data words with less than 16 bits are stored in the least significant bits of the RAM. Unused bits in a receive queue entry are set to zero upon completion of the individual queue entry.

NOTE

Throughout ColdFire documentation, ‘word’ is used consistently and exclusively to designate a 16-bit data unit. The only exceptions to this appear in discussions of serial communication modules such as QSPI that support variable-length data units. To simplify these discussions the functional unit is referred to as a ‘word’ regardless of length.

QWR[CPTQP] shows which queue entries have been executed. The user can query this field to determine which locations in receive RAM contain valid data.

14.4.1.2 Transmit RAM

Data to be transmitted by the QSPI is stored in the transmit RAM segment located at addresses 0x0 to 0xF. The user normally writes 1 word into this segment for each queue command to be executed. The user cannot read transmit RAM.

Out-bound data must be written to transmit RAM in a right-justified format. The unused bits are ignored. The QSPI copies the data to its data serializer (shift register) for transmission. The data is transmitted most significant bit first and remains in transmit RAM until overwritten by the user.

14.4.1.3 Command RAM

The CPU writes one byte of control information to this segment for each QSPI command to be executed. Command RAM is write-only memory from a user's perspective.

Command RAM consists of 16 bytes with each byte divided into two fields. The peripheral chip select field controls the QSPI_CS signal levels for the transfer. The command control field provides transfer options.

A maximum of 16 commands can be in the queue. Queue execution proceeds from the address in QWR[NEWQP] through the address in QWR[ENDQP].

The QSPI executes a queue of commands defined by the control bits in each command RAM entry which sequence the following actions:

- chip-select pins are activated
- data is transmitted from transmit RAM and received into the receive RAM
- the synchronous transfer clock QSPI_CLK is generated

Before any data transfers begin, control data must be written to the command RAM, and any out-bound data must be written to transmit RAM. Also, the queue pointers must be initialized to the first and last entries in the command queue.

Data transfer is synchronized with the internally generated QSPI_CLK, whose phase and polarity are controlled by QMR[CPHA] and QMR[CPOL]. These control bits determine which QSPI_CLK edge is used to drive outgoing data and to latch incoming data.

14.4.2 Baud Rate Selection

The maximum QSPI clock frequency is one-fourth the clock frequency applied at the CLKIN pin. Baud rate is selected by writing a value from 2–255 into QMR[BAUD]. The QSPI uses a prescaler to derive the QSPI_CLK rate from the system clock, CLKIN, divided by two.

A baud rate value of zero turns off the QSPI_CLK. The desired QSPI_CLK baud rate is related to CLKIN and QMR[BAUD] by the following expression:

QMR[BAUD] = CLKIN / [2 × (desired QSPI_CLK baud rate)]

Table 14-2. QSPI_CLK Frequency as Function of CPU Clock and Baud Rate

QMR [BAUD]	CPU Clock			
	66 MHz	48 MHz	33 MHz	20 MHz
2	16,500,000	12,000,000	8,250,000	5,000,000
4	8,250,000	6,000,000	4,125,000	2,500,000
8	4,125,000	3,000,000	2,062,500	1,250,000
16	2,062,500	1,500,000	1,031,250	625,000
32	1,031,250	750,000	515,625	312,500
255	129,412	94,118	64,706	39,216

14.4.3 Transfer Delays

The QSPI supports programmable delays for the QSPI_CS signals before and after a transfer. The time between QSPI_CS assertion and the leading QSPI_CLK edge, and the time between the end of one transfer and the beginning of the next, are both independently programmable.

The chip select to clock delay enable (DSCK) bit in command RAM, QCR[DSCK], enables the programmable delay period from QSPI_CS assertion until the leading edge of QSPI_CLK. QDLYR[QCD] determines the period of delay before the leading edge of QSPI_CLK. The following expression determines the actual delay before the QSPI_CLK leading edge:

QSPI_CS-to-QSPI_CLK delay = QCD/CLKIN frequency

QCD has a range of 1–127.

When QCD or DSCK equals zero, the standard delay of one-half the QSPI_CLK period is used.

The delay after transmit enable (DT) bit in command RAM enables the programmable delay period from the negation of the QSPI_CS signals until the start of the next transfer. The delay after transfer can be used to provide a peripheral deselect interval. A delay can also be inserted between consecutive transfers to allow serial A/D converters to complete conversion. There are two transfer delay options: the user can choose to delay a standard period after serial transfer is complete or can specify a delay period. Writing a value to QDLYR[DTL] specifies a delay period. The DT bit in command RAM determines whether the standard delay period (DT = 0) or the specified delay period (DT = 1) is used. The following expression is used to calculate the delay:

Delay after transfer = 32 × QDLYR[DTL] /CLKIN frequency (DT = 1)

where QDLYR[DTL] has a range of 1–255.

A zero value for DTL causes a delay-after-transfer value of 8192/CLKIN frequency.

Standard delay after transfer = 17/CLKIN frequency (DT = 0)

Receiving devices need at least the standard delay (DT=0) between successive transfers for long data streams because the QSPI module requires time to load a transmit RAM entry for transfer. If CLKIN is operating at a slower rate, the delay between transfers must be increased proportionately.

14.4.4 Transfer Length

There are two transfer length options. The user can choose a default value of 8 bits or a programmed value of 8 to 16 bits inclusive. The programmed value must be written into QMR[BITS]. The bits per transfer enable (BITSE) field in the command RAM determines whether the default value (BITSE = 0) or the BITS[3–0] value (BITSE = 1) is used. QMR[BITS] gives the required number of bits to be transferred, with 0b0000 representing 16.

14.4.5 Data Transfer

Operation is initiated by setting QDLYR[SPE]. Shortly after QDLYR[SPE] is set, the QSPI executes the command at the command RAM address pointed to by QWR[NEWQP]. Data at the pointer address in transmit RAM is loaded into the data serializer and transmitted. Data that is simultaneously received is stored at the pointer address in receive RAM.

When the proper number of bits has been transferred, the QSPI stores the working queue pointer value in QWR[CPTQP], increments the working queue pointer, and loads the next data for transfer from the transmit RAM. The command pointed to by the incremented working queue pointer is executed next unless a new value has been written to QWR[NEWQP]. If a new queue pointer value is written while a transfer is in progress, then that transfer is completed normally.

When the CONT bit in the command RAM is set, the QSPI_CS signals are asserted between transfers. When CONT is cleared, QSPI_CS[0:3] are negated between transfers. The QSPI_CS signals are not high impedance.

When the QSPI reaches the end of the queue, it asserts the SPIF flag, QIR[SPIF]. If QIR[SPIFE] is set, an interrupt request is generated when QIR[SPIF] is asserted. Then the QSPI clears QDLYR[SPE] and stops, unless wraparound mode is enabled.

Wraparound mode is enabled by setting QWR[WREN]. The queue can wrap to pointer address 0x0, or to the address specified by QWR[NEWQP], depending on the state of QWR[WRTO].

In wraparound mode, the QSPI cycles through the queue continuously, even while requesting interrupt service. QDLYR[SPE] is not cleared when the last command in the queue is executed. New receive data overwrites previously received data in the receive RAM. Each time the end of the queue is reached, QIR[SPIFE] is set. QIR[SPIF] is not automatically reset. If interrupt driven QSPI service is used, the service routine must clear QIR[SPIF] to abort the current request. Additional interrupt requests during servicing can be prevented by clearing QIR[SPIFE].

There are two recommended methods of exiting wraparound mode: clearing QWR[WREN] or setting QWR[HALT]. Exiting wraparound mode by clearing QDLYR[SPE] is not recommended because this may abort a serial transfer in progress. The QSPI sets SPIF, clears QDLYR[SPE], and stops the first time it reaches the end of the queue after QWR[WREN] is cleared. After QWR[HALT] is set, the QSPI finishes the current transfer, then stops executing commands. After the QSPI stops, QDLYR[SPE] can be cleared.

14.5 Programming Model

The programming model for the QSPI consists of six registers. They are the QSPI mode register (QMR), QSPI delay register (QDLYR), QSPI wrap register (QWR), QSPI interrupt register (QIR), QSPI address register (QAR), and the QSPI data register (QDR).

There are a total of 80 bytes of memory used for transmit, receive, and control data. This memory is accessed indirectly using QAR and QDR.

Registers and RAM are written and read by the CPU.

14.5.1 QSPI Mode Register (QMR)

The QMR register, shown in Figure 14-3, determines the basic operating modes of the QSPI module. Parameters such as clock polarity and phase, baud rate, master mode operation, and transfer size are determined by this register. The data output high impedance enable, DOHIE, controls the operation of QSPI_Dout between data transfers. When DOHIE is cleared, QSPI_Dout is actively driven between transfers. When DOHIE is set, QSPI_Dout assumes a high impedance state.

NOTE

Because the QSPI does not operate in slave mode, the master mode enable bit, QMR[MSTR], must be set for the QSPI module to operate correctly.

	15	14	13 … 10	9	8	7 … 0
Field	MSTR	DOHIE	BITS	CPOL	CPHA	BAUD
Reset	0000_0001_0000_0100					
R/W	R/W					
Address	MBAR + 0x00A0					

Figure 14-3. QSPI Mode Register (QMR)

Table 14-3 gives QMR field descriptions.

Table 14-3. QMR Field Descriptions

Bits	Name	Description
15	MSTR	Master mode enable. 0 Reserved, do not use. 1 The QSPI is in master mode. Must be set for the QSPI module to operate correctly.
14	DOHIE	Data output high impedance enable. Selects QSPI_Dout mode of operation. 0 Default value after reset. QSPI_Dout is actively driven between transfers. 1 QSPI_Dout is high impedance between transfers.

Table 14-3. QMR Field Descriptions (continued)

Bits	Name	Description
13–10	BITS	Transfer size. Determines the number of bits to be transferred for each entry in the queue. Value Bits per transfer 0000 16 0001– 0111 Reserved 1000 8 1001 9 1010 10 1011 11 1100 12 1101 13 1110 14 1111 15
9	CPOL	Clock polarity. Defines the clock polarity of SCK. 0 The inactive state value of QSPI_CLK is logic level 0. 1 The inactive state value of QSPI_CLK is logic level 1.
8	CPHA	Clock phase. Defines the QSPI_CLK clock-phase. 0 Data captured on the leading edge of QSPI_CLK and changed on the following edge of QSPI_CLK. 1 Data changed on the leading edge of QSPI_CLK and captured on the following edge of QSPI_CLK.
7–0	BAUD	Baud rate divider. The baud rate is selected by writing 0, or a value in the range 2–255. 1 is not a valid value. A value of zero disables the QSPI. The desired QSPI_CLK baud rate is related to CLKIN and QMR[BAUD] by the following expression: QMR[BAUD] = SystemClock / [2 × (desired QSPI_CLK baud rate)]

Figure 14-4 shows an example of a QSPI clocking and data transfer.

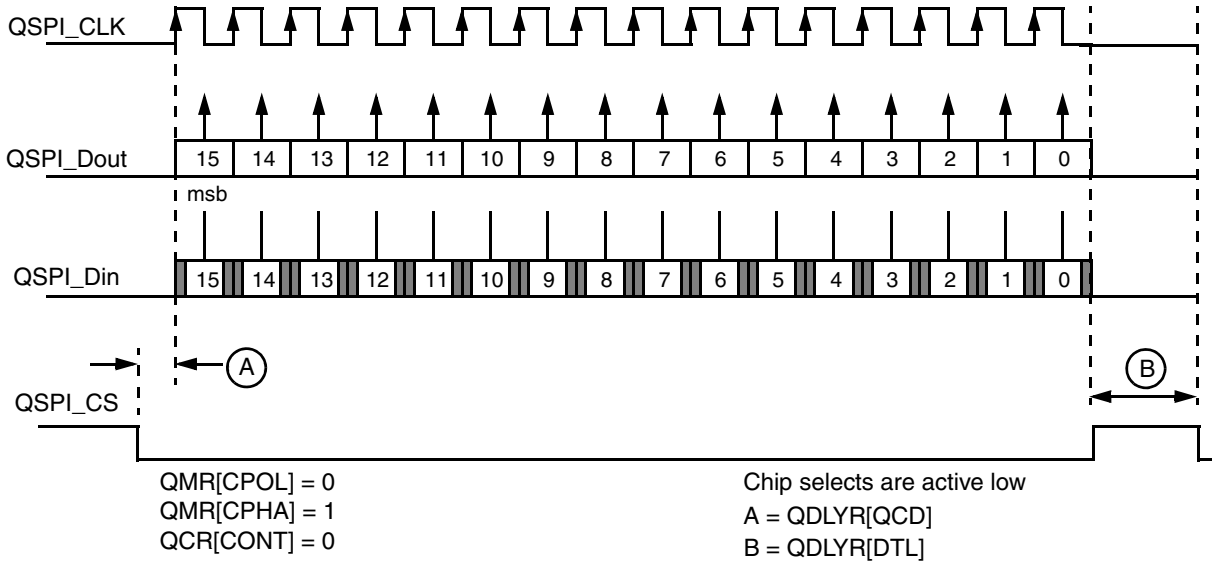

Figure 14-4. QSPI Clocking and Data Transfer Example

Figure 14-5 shows the timing of the four SPI modes.

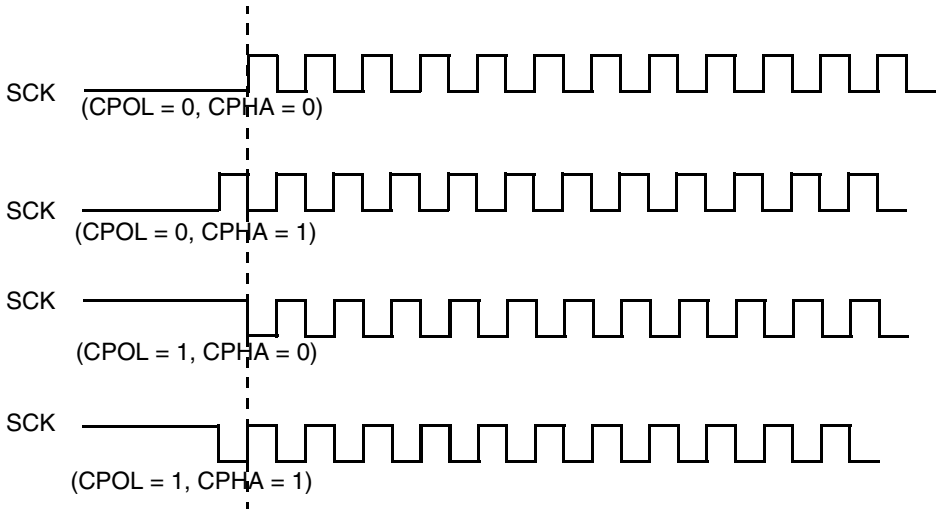

Figure 14-5. SPI Modes Timing

14.5.2 QSPI Delay Register (QDLYR)

Figure 14-6 shows the QSPI delay register.

	15	14 … 8	7 … 0
Field	SPE	QCD	DTL
Reset	0000_0100_0000_0100		
R/W	R/W		
Address	MBAR + 0x00A4		

Figure 14-6. QSPI Delay Register (QDLYR)

Table 14-4 gives QDLYR field descriptions.

Table 14-4. QDLYR Field Descriptions

Bits	Name	Description
15	SPE	QSPI enable. When set, the QSPI initiates transfers in master mode by executing commands in the command RAM. Automatically cleared by the QSPI when a transfer completes.The user can also clear this bit to abort transfer unless QIR[ABRTL] is set. The recommended method for aborting transfers is to set QWR[HALT].
14–8	QCD	QSPILCK Delay. When the DSCK bit in the command RAM, is set this field determines the length of the delay from assertion of the chip selects to valid QSPI_CLK transition.
7–0	DTL	Delay after transfer.When the DT bit in the command RAM sets this field determines the length of delay after the serial transfer.

14.5.3 QSPI Wrap Register (QWR)

	15	14	13	12	11 8	7 4	3 0
Field	HALT	WREN	WRTO	CSIV	ENDQP	–	NEWQP
Reset	0000_0000_0000_0000						
R/W	R/W						
Address	MBAR + 0x00A8						

Figure 14-7. QSPI Wrap Register (QWR)

Table 14-5 gives QWR field descriptions.

Table 14-5. QWR Field Descriptions

Bits	Name	Description
15	HALT	Halt transfers. Assertion of this bit causes the QSPI to stop execution of commands once it has completed execution of the current command.
14	WREN	Wraparound enable. Enables wraparound mode. 0 Execution stops after executing the command pointed to by QWR[ENDQP]. 1 After executing command pointed to by QWR[ENDQP], wrap back to entry zero, or the entry pointed to by QWR[NEWQP] and continue execution.
13	WRTO	Wraparound location. Determines where the QSPI wraps to in wraparound mode. 0 Wrap to RAM entry zero. 1 Wrap to RAM entry pointed to by QWR[NEWQP].
12	CSIV	QSPI_CS inactive level. 0 QSPI chip select outputs return to zero when not driven from the value in the current command RAM entry during a transfer (that is, inactive state is 0, chip selects are active high). 1 QSPI chip select outputs return to one when not driven from the value in the current command RAM entry during a transfer (that is, inactive state is 1, chip selects are active low).
11–8	ENDQP	End of queue pointer. Points to the RAM entry that contains the last transfer description in the queue.
7–4	CPTQP	Completed queue entry pointer. Points to the RAM entry that contains the last command to have been completed. This field is read only.
3–0	NEWQP	Start of queue pointer. This 4-bit field points to the first entry in the RAM to be executed on initiating a transfer.

14.5.4 QSPI Interrupt Register (QIR)

Figure 14-8 shows the QSPI interrupt register.

	15	14	13	12	11	10	9	8	7 4	3	2	1	0
Field	WCEFB	ABRTB	—	ABRTL	WCEFE	ABRTE	—	SPIFE	—	WCEF	ABRT	—	SPIF
Reset	0000_0000_0000_0000												
R/W	R/W												
Address	MBAR + 0x00AC												

Figure 14-8. QSPI Interrupt Register (QIR)

Table 14-6 describes QIR fields.

Table 14-6. QIR Field Descriptions

Bits	Name	Description
15	WCEFB	Write collision access error enable. A write collision occurs during a data transfer when the RAM entry containing the command currently being executed is written to by the CPU with the QDR. When this bit is asserted, the write access to QDR results in an access error.
14	ABRTB	Abort access error enable. An abort occurs when QDLYR[SPE] is cleared during a transfer. When set, an attempt to clear QDLYR[SPE] during a transfer results in an access error.
13	—	Reserved, should be cleared.
12	ABRTL	Abort lock-out. When set, QDLYR[SPE] cannot be cleared by writing to the QDLYR. QDLYR[SPE] is only cleared by the QSPI when a transfer completes.
11	WCEFE	Write collision interrupt enable. Interrupt enable for WCEF. Setting this bit enables the interrupt, and clearing it disables the interrupt.
10	ABRTE	Abort interrupt enable. Interrupt enable for ABRT flag. Setting this bit enables the interrupt, and clearing it disables the interrupt.
9	—	Reserved, should be cleared.
8	SPIFE	QSPI finished interrupt enable. Interrupt enable for SPIF. Setting this bit enables the interrupt, and clearing it disables the interrupt.
7–4	—	Reserved, should be cleared.
3	WCEF	Write collision error flag. Indicates that an attempt has been made to write to the RAM entry that is currently being executed. Writing a 1 to this bit clears it and writing 0 has no effect.
2	ABRT	Abort flag. Indicates that QDLYR[SPE] has been cleared by the user writing to the QDLYR rather than by completion of the command queue by the QSPI. Writing a 1 to this bit clears it and writing 0 has no effect.
1	—	Reserved, should be cleared.
0	SPIF	QSPI finished flag. Asserted when the QSPI has completed all the commands in the queue. Set on completion of the command pointed to by QWR[ENDQP], and on completion of the current command after assertion of QWR[HALT]. In wraparound mode, this bit is set every time the command pointed to by QWR[ENDQP] is completed. Writing a 1 to this bit clears it and writing 0 has no effect.

The command and data RAM in the QSPI is indirectly accessible with QDR and QAR as 48 separate locations that comprise 16 words of transmit data, 16 words of receive data and 16 bytes of commands.

A write to QDR causes data to be written to the RAM entry specified by QAR[ADDR]. This also causes the value in QAR to increment.

Correspondingly, a read at QDR returns the data in the RAM at the address specified by QAR[ADDR]. This also causes QAR to increment. A read access requires a single wait state.

NOTE

The QAR does not wrap after the last queue entry within each section of the RAM.

14.5.5 QSPI Address Register (QAR)

The QAR, shown in Figure 14-9, is used to specify the location in the QSPI RAM that read and write operations affect.

	15 … 6	5 … 0
Field	—	ADDR
Reset	0000_0000_0000_0000	
R/W	R/W	
Address	MBAR + 0x00B0	

Figure 14-9. QSPI Address Register

14.5.6 QSPI Data Register (QDR)

The QDR, shown in Figure 14-10, is used to access QSPI RAM indirectly. The CPU reads and writes all data from and to the QSPI RAM through this register. A read or write to QDR causes the value in QAR to increment.

	15 … 0
Field	DATA
Reset	0000_0000_0000_0000
R/W	R/W
Address	MBAR + 0x00B4

Figure 14-10. QSPI Data Register

14.5.7 Command RAM Registers (QCR0–QCR15)

The command RAM is accessed using the upper byte of QDR. The QSPI cannot modify information in command RAM.

There are 16 bytes in the command RAM. Each byte is divided into two fields. The chip select field enables external peripherals for transfer. The command field provides transfer operations.

NOTE

The command RAM is accessed only using the most significant byte of QDR and indirect addressing based on QAR[ADDR].

Figure 14-11 shows the command RAM register.

	15	14	13	12	11 … 8	7 … 0
Field	CONT	BITSE	DT	DSCK	QSPI_CS	–
Reset	Undefined					
R/W	Write Only					
Address	QAR[ADDR]					

Figure 14-11. Command RAM Registers (QCR0–QCR15)

Table 14-7 gives QCR field descriptions.

Table 14-7. QCR0–QCR15 Field Descriptions

Bits	Name	Description
15	CONT	Continuous. 0 Chip selects return to inactive level defined by QWR[CSIV] when transfer is complete. 1 Chip selects remain asserted between transfers for a transfer of up to 16 words of data.[1]
14	BITSE	Bits per transfer enable. 0 Eight bits 1 Number of bits set in QMR[BITS]
13	DT	Delay after transfer enable. 0 Default reset value. 1 The QSPI provides a variable delay at the end of serial transfer to facilitate interfacing with peripherals that have a latency requirement. The delay between transfers is determined by QDLYR[DTL].
12	DSCK	Chip select to QSPI_CLK delay enable. 0 Chip select valid to QSPI_CLK transition is one-half QSPI_CLK period. 1 QDLYR[QCD] specifies the delay from QSPI_CS valid to QSPI_CLK.
11–8	QSPI_CS	Peripheral chip selects. Used to select an external device for serial data transfer. More than one chip select may be active at once, and more than one device can be connected to each chip select. Bits 11–8 map directly to QSPI_CS[3:0], respectively. If it is desired to use those bits as a chip select value, then an external demultiplexor must be connected to the QSPI_CS[3:0] pins.
7–0	—	Reserved, should be cleared.

[1] In order to keep the chip setects asserted for all transfers, the QWR[CSIV] bit must be set to control the level that the chip selects return to after the first transfer.

14.5.8 Programming Example

The following steps are necessary to set up the QSPI 12-bit data transfers and a QSPI_CLK of 4.125 MHz. The QSPI RAM is set up for a queue of 16 transfers. All four QSPI_CS signals are used in this example.

1. Enable all QSPI_CS pins on the MCF5272. Write PACNT with 0x0080_4000 to enable QSPI_CS1 and QSPI_CS3.Write PDCNT with 0x0000_0030 to enable QSPI_CS2.
2. Write the QMR with 0xB308 to set up 12-bit data words with the data shifted on the falling clock edge, and a clock frequency of 4.125 MHz (assuming a 66-MHz CLKIN).
3. Write QDLYR with the desired delays.
4. Write QIR with 0xD00D to enable write collision, abort bus errors, and clear any interrupts.
5. Write QAR with 0x0020 to select the first command RAM entry.
6. Write QDR with 0x7E00, 0x7E00, 0x7E00, 0x7E00, 0x7D00, 0x7D00, 0x7D00, 0x7D00, 0x7B00, 0x7B00, 0x7B00, 0x7B00, 0x7700, 0x7700, 0x7700, and 0x7700 to set up four transfers for each chip select. The chip selects are active low in this example.
7. Write QAR with 0x0000 to select the first transmit RAM entry.
8. Write QDR with sixteen 12-bit words of data.
9. Write QWR with 0x0F00 to set up a queue beginning at entry 0 and ending at entry 15.
10. Set QDLYR[SPE] to enable the transfers.
11. Wait until the transfers are complete. QIR[SPIF] is set when the transfers are complete.
12. Write QAR with 0x0010 to select the first receive RAM entry.
13. Read QDR to get the received data for each transfer.
14. Repeat steps 5 through 13 to do another transfer.

Chapter 15
Timer Module

This chapter describes configuration and operation of the four general-purpose timer modules, timer 0, 1, 2 and 3.

15.1 Overview

The timer module has four identical general-purpose 16-bit timers and a software watchdog timer, described in Chapter 6, “System Integration Module (SIM).”

Each general-purpose timer consists of a timer mode register (TMR*n*), a timer capture register (TCAP*n*), a 16-bit timer counter (TCN*n*), a timer reference register (TRR*n*), and a timer event register (TER*n*). The TMRs contain the prescaler value programmed by the user. The four timer units have the following features:

- Maximum period of 4 seconds at 66 MHz
- 15-nS resolution at 66 MHz
- Programmable sources for the clock input, including external clock
- Input capture capability with programmable trigger edge on input pins
- Output compare with programmable mode for the output pins
- Free run and restart modes

15.2 Timer Operation

The timer units consist of four identical, independent 16-bit timers, timers 0–3. For timers 0 and 1, the clock input to the prescaler is selected from the main clock (divided by 1 or 16) or from the corresponding timer input (TIN0 or TIN1) pin. For timers 2 and 3, the clock input to the prescaler can be selected only from the main clock (divided by 1 or 16). TIN is internally synchronized to the internal clock, with a synchronization delay between two and three main clocks. The clock input source is selected by the CLK bits of the corresponding timer mode register (TMR0–TMR3). The prescaler is programmed to divide the clock input by values from 1 to 256. The output of the prescaler is used as an input to the 16-bit counter.

The maximum timer resolution is one system clock cycle (15 nS at 66 MHz). The maximum period (the reference value is all ones) is 268,435,456 cycles = $2^4 \times 2^8 \times 2^{16}$ (4 seconds at 66 MHz).

The timer can be configured to count until a reference is reached at which point it can either start a new time count immediately or continue to run. The free run/restart bit, TMR*n*[FRR], selects each mode. Upon reaching the reference value, the TER0 or TER1 bit is set, and an interrupt is issued if the output reference interrupt enable bit, TMR[ORI], is set.

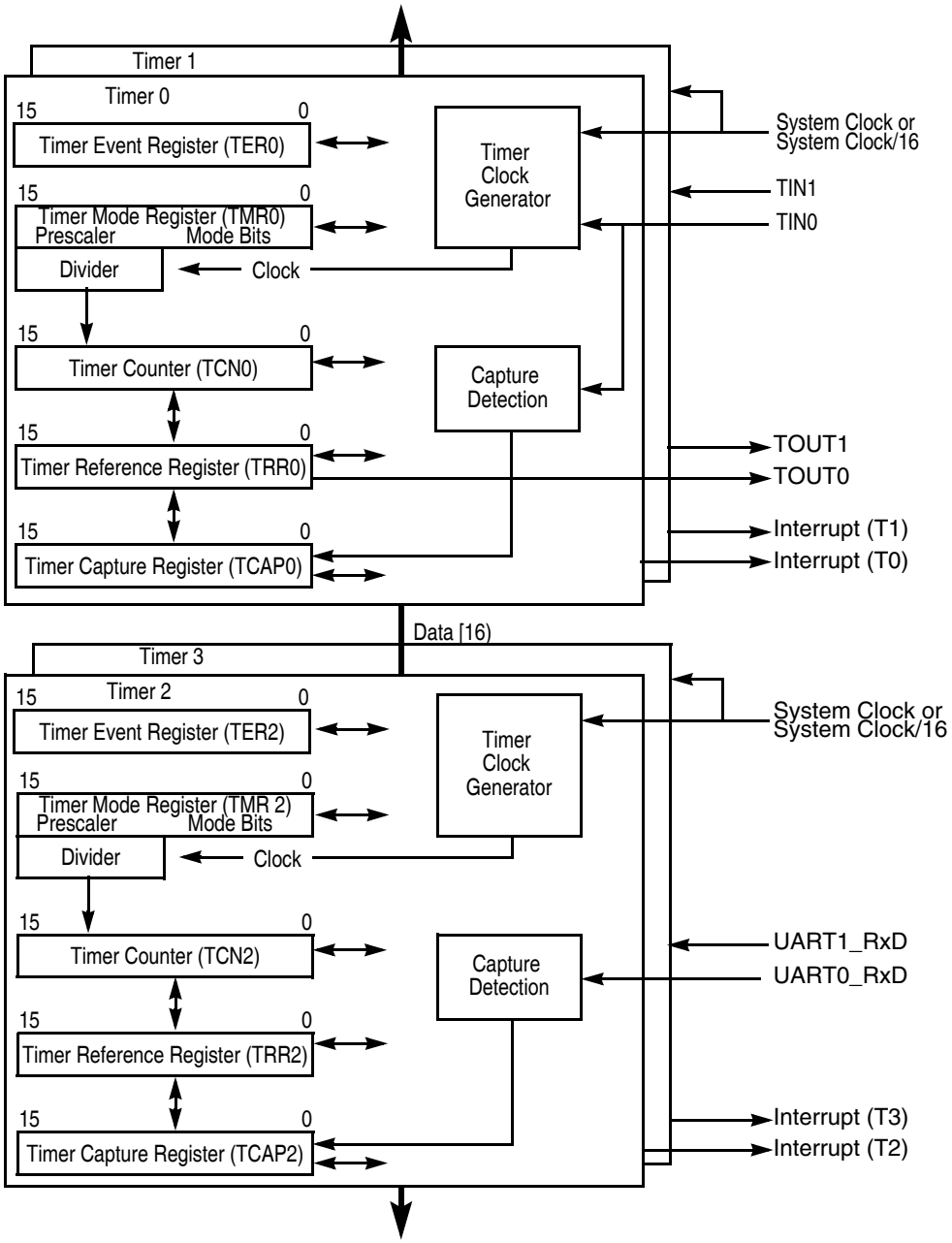

Figure 15-1. Timer Block Diagram

Timers 0 and 1 may output a signal on the timer outputs (TOUT0 or TOUT1) when the reference value is reached, as selected by the output mode bit, TMR[OM]. This signal can be an active-low pulse or a toggle of the current output, under program control.

The TCAPs are used to latch counter values when the corresponding input capture edge detector detects a defined transition (of TIN0, TIN1, URT0_RxD, or URT1_RxD). The type of transition triggering the capture is selected by the capture edge bits, TMR[CE].A capture or reference event sets the TER bit and generates a maskable interrupt.

15.3 General-Purpose Timer Registers

The following sections describe the timer registers.

15.3.1 Timer Mode Registers (TMR0–TMR3)

The TMRs, Table 15-2, have fields for choosing a prescaler, a clock edge, and other parameters.

	15 8	7 6	5	4	3	2 1	0
Field	PRESCALER (PS)	CE	OM[1]	ORI	FRR	CLK	RST
Reset	0000_0000_0000_0000						
R/W	Read/Write						
Addr	MBAR + 0x200 (TMR0); 0x220 (TMR1); 0x240 (TMR2); 0x260 (TMR3)						

[1] Not implemented (reserved) in TMR2 and TMR3.

Figure 15-2. Timer Mode Registers (TMR0–TMR3)

TMR*n* fields are described in Table 15-1.

Table 15-1. TMR*n* Field Descriptions

Bits	Name	Description
15–8	PS	Prescaler. Programmed to divide the clock input by values from 1 to 256. The value 0000_0000 divides the clock by 1; the value 1111_1111 divides the clock by 256.
7–6	CE	Capture edge and enable interrupt. 00 Disable capture and interrupt on capture event 01 Capture on rising edge only and generate interrupt on capture event 10 Capture on falling edge only and generate interrupt on capture event 11 Capture on any edge and generate interrupt on capture event
5	OM	Output mode (TMR0 and TMR1 only. Reserved in TMR2 and TMR3) 0 Active-low pulse for one system clock cycle (15 nS at 66 MHz) 1 Toggle output TOUT*n* is high at reset but is unavailable externally until the appropriate port control register is configured for this function. See Section 17.2, “Port Control Registers.”
4	ORI	Output reference interrupt enable 0 Disable interrupt for reference reached (does not affect interrupt on capture function) 1 Enable interrupt upon reaching the reference value If ORI is 1 when the TER[REF] is set, an immediate interrupt occurs.
3	FRR	Free run/restart 0 Free run. Timer count continues to increment after the reference value is reached. 1 Restart. Timer count is reset immediately after the reference value is reached.
2–1	CLK	Input clock source for the timer 00 Stop count 01 Master system clock 10 Master system clock divided by 16. TIN0 and TIN1 are external to the MCF5272 and are not synchronized to the system clock, so successive timeout lengths may vary slightly. 11 Corresponding TIN pin, TIN0 or TIN1 (falling edge), unused in TMR2 and TMR3 The minimum high and low periods for TIN as the clock source is 1 system clock, which gives a maximum TIN frequency of clock/2.

Table 15-1. TMR*n* Field Descriptions (continued)

Bits	Name	Description
0	RST	Reset timer. 0 A transition from 1 to 0 resets the timer. Other register values can be written. The counter/timer/prescaler are not clocked unless the timer is enabled. 1 Enable timer

15.3.2 Timer Reference Registers (TRR0–TRR3)

Each TRR holds a 16-bit reference value that is compared with the free-running TCN as part of the output compare function. A match occurs when TCN increments to equal TRR.

	15 … 0
Field	REF (16-bit reference value)
Reset	1111_1111_1111_1111
R/W	Read/Write
Addr	MBAR + 0x204 (TRR0); 0x224 (TRR1); 0x244 (TRR2); 0x264 (TRR3)

Figure 15-3. Timer Reference Registers (TRR0–TRR3)

15.3.3 Timer Capture Registers (TCAP0–TCAP3)

Each TCAP is used to latch the TCN value during a capture operation when an edge occurs on the respective TIN0, TIN1, UART0_RxD, or UART1_RxD, as programmed in TMR*n*.

	15 … 0
Field	CAP (16-bit capture counter value)
Reset	0000_0000_0000_0000
R/W	Read Only
Addr	MBAR + 0x208 (TCAP0); 0x228 (TCAP1); 0x248 (TCAP2); 0x268 (TCAP3)

Figure 15-4. Timer Capture Registers (TCAP0–TCAP3)

15.3.4 Timer Counters (TCN0–TCN3)

TCN registers are 16-bit up counters. Reading a TCN*n* gives the current counter value without affecting counting. A write cycle to a TCN register causes it to be cleared.

	15 … 0
Field	COUNT (16-bit timer counter value)
Reset	0000_0000_0000_0000
R/W	Read/Write
Addr	MBAR + 0x20C (TCN0); 0x22C (TCN1); 0x24C (TCN2); 0x26C (TCN3)

Figure 15-5. Timer Counter (TCN0–TCN3)

15.3.5 Timer Event Registers (TER0–TER3)

TERs are used to report events recognized by the timer. On recognition of an event, the timer sets the appropriate TER*n* bit, regardless of the corresponding interrupt enable bits (ORI and CE) in the TMR*n*. Writing a 1 to a bit clears it; writing 0 has no effect. Both bits must be cleared before the timer can negate the request to the interrupt controller. Both bits may be cleared simultaneously.

	15 … 2	1	0
Field	—	REF	CAP
Reset	0000_0000_0000_0000		
R/W	Read/Write		
Addr	MBAR + 0x210 (TER0); 0x230 (TER1); 0x250 (TER2); 0x270 (TER3)		

Figure 15-6. Timer Event Registers (TER0–TER3)

Table 15-2 describes TER*n* fields.

Table 15-2. TER*n* Field Descriptions

Bits	Name	Description
15–2	—	Reserved, should be cleared.
1	REF	Output reference event. 0 The counter has not reached the TRR value 1 The counter reached the TRR value. TMR[ORI] is used to enable the interrupt request caused by this event. Write a 1 to this bit to clear the event condition.
0	CAP	Capture event. 0 The counter value has not been latched into the TCAP. 1 The counter value is latched in the TCAP. TMR[CE] is used to enable capture and the interrupt request caused by this event. Write a 1 to this bit to clear the event condition.

Chapter 16
UART Modules

This chapter describes the use of the universal asynchronous/synchronous receiver/transmitters (UARTs) implemented on the MCF5272 and includes programming examples. All references to UART refer to one of these modules.

16.1 Overview

The MCF5272 contains two independent UARTs. Each UART can be clocked by either URT_CLK or CLKIN, eliminating the need for an external crystal. As Figure 16-1 shows, each UART module interfaces directly to the CPU and consists of the following:

- Serial communication channel
- Programmable transmitter and receiver clock generation
- Internal channel control logic
- Interrupt control logic

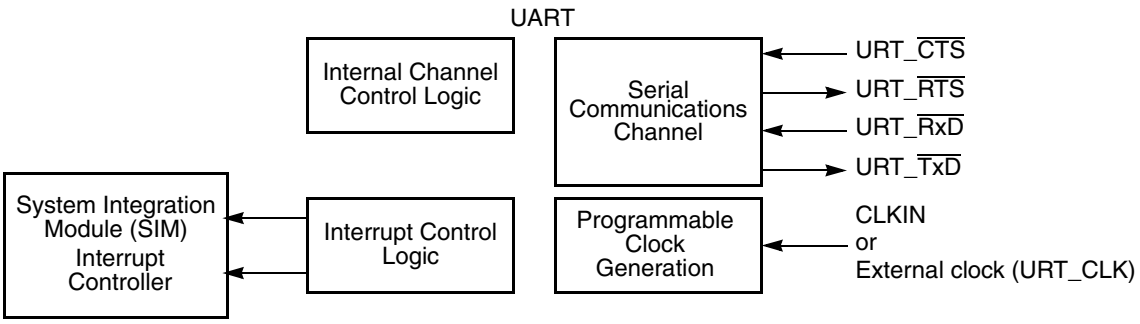

Figure 16-1. Simplified Block Diagram

The serial communication channel provides a full-duplex asynchronous/synchronous receiver and transmitter deriving an operating frequency from CLKIN or an external clock of the correct frequency (URT_CLK). The transmitter converts parallel data from the CPU to a serial bit stream, inserting appropriate start, stop, and parity bits. It outputs the resulting stream on the channel transmitter serial data output (TxD). See Section 16.5.2.1, “Transmitting.”

The receiver converts serial data from the channel receiver serial data input (RxD) to parallel format, checks for a start, stop, and parity bits, or break conditions, and transfers the assembled character onto the bus during read operations. The receiver may be polled- or interrupt-driven. See Section 16.5.2.2, “Receiver.”

16.2 Serial Module Overview

The MCF5272 contains two independent UART modules, whose features are as follows:

- Each clocked by either URT_CLK or CLKIN, eliminating a need for an external crystal
- Full-duplex asynchronous/synchronous receiver/transmitter channel
- 24-byte FIFO receiver
  - — $\overline{\text{CTS}}$ receiver FIFO control
  - — Receiver FIFO timeout
- 24-byte FIFO transmitter
- Independently programmable receiver and transmitter clock sources
- Programmable data format:
  - — 5–8 data bits plus parity
  - — Odd, even, no parity, or force parity
  - — One, one-and-a-half, or two stop bits
- Each channel programmable to normal (full-duplex), automatic echo, local loop-back, or remote loop-back mode
- Automatic wake-up mode for multidrop applications
- Eight maskable interrupt conditions
- Parity, framing, and overrun error detection
- False-start bit detection
- Line-break detection and generation
- Detection of breaks originating in the middle of a character
- Start/end break interrupt/status
- Autobaud capability

The MCF5272 UART modules are identical to those on other ColdFire devices, such as the MCF5206e, with the following exceptions:

- The MCF5272 receiver and transmitter FIFOs have been expanded to 24 bytes.
- Interrupts can be programmed to occur at various levels of FIFO fullness on both the receiver and transmitter.
- Autobaud capability has been added to automatically calculate the character transmission rate from the first received character.
- Registers have been added to increase accuracy in clock generation.

16.3 Register Descriptions

This section contains a detailed description of each register and its specific function. Flowcharts in Section 16.5.6, “Programming,” describe basic UART module programming. The operation of the UART module is controlled by writing control bytes into the appropriate registers. Table 16-1 is a memory map for UART module registers.

Table 16-1. UART Module Programming Model

MBAR Offset		[31:24]	[23:16]	[15:8]	[7:0]
UART0	UART1				
0x100	0x140	UART mode registers[1]—(UMR1*n*) [p. 16-4], (UMR2*n*) [p. 16-6]	—		
0x104	0x144	(Read) UART status registers—(USR*n*) [p. 16-7]	—		
		(Write) UART clock-select register[1]—(UCSR*n*) [p. 16-8]	—		
0x108	0x148	(Read) Do not access.[2]	—		
		(Write) UART command registers—(UCR*n*) [p. 16-9]	—		
0x10C	0x14C	(UART/Read) UART receiver buffers—(URB*n*) [p. 16-10]	—		
		(UART/Write) UART transmitter buffers—(UTB*n*) [p. 16-11]	—		
0x110	0x150	(Read) UART input port change registers—(UIPCR*n*) [p. 16-11]	—		
		(Write) UART auxiliary control registers[1]—(UACR*n*) [p. 16-12]	—		
0x114	0x154	(Read) UART interrupt status registers—(UISR*n*) [p. 16-12]	—		
		(Write) UART interrupt mask registers—(UIMR*n*) [p. 16-12]	—		
0x118	0x158	(Read) Do not access.[2]	—		
		UART divider upper registers—(UDU*n*) [p. 16-14]	—		
0x11C	0x15C	(Read) Do not access.[2]	—		
		UART divider lower registers—(UDL*n*) [p. 16-14]	—		
0x120	0x160	(Read) UART autobaud register MSB—(UABU*n*) [p. 16-17]	—		
		(Write) Do not access.[2]	—		
0x124	0x164	(Read) UART autobaud register LSB—(UABL*n*) [p. 16-17]	—		
		(Write) Do not access[2]	—		
0x128	0x168	UART Transmitter FIFO registers—(UTF*n*) [p. 16-4]	—		

Table 16-1. UART Module Programming Model (continued)

MBAR Offset		[31:24]	[23:16]	[15:8]	[7:0]
UART0	UART1				
0x12C	0x16C	UART Receiver FIFO registers—(URF*n*) [p. 16-4]	—		
0x130	0x170	UART Fractional Precision Divider Control registers (UFPD*n*) [p. 16-17]	—		
0x134	0x174	(Read) UART input port registers—(UIP*n*) [p. 16-17]	—		
		(Write) Do not access.[2]	—		
0x138	0x178	(Read) Do not access.[2]	—		
		(Write) UART output port bit set command registers—(UOP1*n*[3]) [p. 16-18]	—		
0x13C	0x17C	(Read) Do not access.[2]	—		
		(Write) UART output port bit reset command registers—(UOP0*n*[3]) [p. 16-18]	—		

1 UMR1*n*, UMR2*n*, and UCSR*n* should be changed only after the receiver/transmitter is issued a software reset command. That is, if channel operation is not disabled, undesirable results may occur.

2 This address is for factory testing. Reading this location results in undesired effects and possible incorrect transmission or reception of characters. Register contents may also be changed.

3 Address-triggered commands

NOTE

UART registers are accessible only as bytes.

16.3.1 UART Mode Registers 1 (UMR1*n*)

The UART mode registers 1 (UMR1*n*) control configuration. UMR1*n* can be read or written when the mode register pointer points to it, at RESET or after a RESET MODE REGISTER POINTER command using UCR*n*[MISC]. After UMR1*n* is read or written, the pointer points to UMR2*n*.

	7	6	5	4	3	2	1	0
Field	RxRTS	RxIRQ/FFULL	ERR	PM		PT	B/C	
Reset	0000_0000							
R/W	R/W							
Address	MBAR + 0x100 (UART0), 0x140 (UART1). After UMR1*n* is read or written, the pointer points to UMR2*n*.							

Figure 16-2. UART Mode Registers 1 (UMR1*n*)

Table 16-2 describes UMR1*n* fields.

Table 16-2. UMR1*n* Field Descriptions

<table>
<tr><th>Bits</th><th>Name</th><th>Description</th></tr>
<tr><td>7</td><td>RxRTS</td><td>Receiver request-to-send. Allows the $\overline{\text{RTS}}$ output to control the $\overline{\text{CTS}}$ input of the transmitting device to prevent receiver overrun. If both the receiver and transmitter are incorrectly programmed for $\overline{\text{RTS}}$ control, $\overline{\text{RTS}}$ control is disabled for both. Transmitter RTS control is configured in UMR2n[TxRTS].
0 The receiver has no effect on $\overline{\text{RTS}}$.
1 When a valid start bit is received, $\overline{\text{RTS}}$ is negated if the UART's FIFO is full. $\overline{\text{RTS}}$ is reasserted when the FIFO has an empty position available.
If RTS is controlled by the fill level of the receiver FIFO via UACRn[RTSL], this bit should be cleared.</td></tr>
<tr><td>6</td><td>RxIRQ/FFULL</td><td>Receiver interrupt select.
0 RxRDY is the source that generates IRQ.
1 FFULL is the source that generates IRQ.
If more detail on the status of the FIFO is required, UISRn{RxFIFO] indicates a change in the FIFO status as programmed in URFn[RXS].</td></tr>
<tr><td>5</td><td>ERR</td><td>Error mode. Configures the FIFO status bits, USRn[RB,FE,PE].
0 Character mode. The USRn values reflect the status of the character at the top of the FIFO. ERR must be 0 for correct A/D flag information when in multidrop mode.
1 Block mode. The USRn values are the logical OR of the status for all characters reaching the top of the FIFO because the last RESET ERROR STATUS command for the channel was issued. See Section 16.3.5, “UART Command Registers (UCRn).”</td></tr>
<tr><td>4–3</td><td>PM</td><td>Parity mode. Selects the parity or multidrop mode for the channel. The parity bit is added to the transmitted character, and the receiver performs a parity check on incoming data. The value of PM affects PT, as shown below.</td></tr>
<tr><td>2</td><td>PT</td><td>Parity type. PM and PT together select parity type (PM = 0x) or determine whether a data or address character is transmitted (PM = 11).
<table>
<tr><th>PM</th><th>Parity Mode</th><th>Parity Type (PT= 0)</th><th>Parity Type (PT= 1)</th></tr>
<tr><td>00</td><td>With parity</td><td>Even parity</td><td>Odd parity</td></tr>
<tr><td>01</td><td>Force parity</td><td>Low parity</td><td>High parity</td></tr>
<tr><td>10</td><td>No parity</td><td colspan="2">n/a</td></tr>
<tr><td>11</td><td>Multidrop mode</td><td>Data character</td><td>Address character</td></tr>
</table></td></tr>
<tr><td>1–0</td><td>B/C</td><td>Bits per character. Select the number of data bits per character to be sent. The values shown do not include start, parity, or stop bits.
00 5 bits
01 6 bits
10 7 bits
11 8 bits</td></tr>
</table>

16.3.2 UART Mode Register 2 (UMR2*n*)

UART mode registers 2 (UMR2*n*) control UART module configuration. UMR2*n* can be read or written when the mode register pointer points to it, which occurs after any access to UMR1*n*. UMR2*n* accesses do not update the pointer.

	7	6	5	4	3	0
Field	CM		TxRTS	TxCTS	SB	
Reset	0000_0000					
R/W	R/W					
Address	MBAR + 0x100, 0x140. After UMR1*n* is read or written, the pointer points to UMR2*n*.					

Figure 16-3. UART Mode Register 2 (UMR2*n*)

Table 16-3 describes UMR2*n* fields.

Table 16-3. UMR2*n* Field Descriptions

Bits	Name	Description
7–6	CM	Channel mode. Selects a channel mode. Section 16.5.3, "Looping Modes," describes individual modes. 00 Normal 01 Automatic echo 10 Local loop-back 11 Remote loop-back
5	TxRTS	Transmitter ready-to-send. Controls negation of $\overline{RTS}$ to automatically terminate a message transmission when the transmitter is disabled after completion of a transmission. Attempting to program a receiver and transmitter in the same channel for $\overline{RTS}$ control is not permitted and disables $\overline{RTS}$ control for both. 0 The transmitter has no effect on $\overline{RTS}$. 1 When the transmitter is disabled after transmission completes, setting this bit automatically clears UOP[RTS] one bit time after any characters in the channel transmitter shift and holding registers are completely sent, including the programmed number of stop bits.
4	TxCTS	Transmitter clear-to-send. If both TxCTS and TxRTS are enabled, TxCTS controls the operation of the transmitter. 0 $\overline{CTS}$ has no effect on the transmitter. 1 Enables clear-to-send operation. The transmitter checks the state of $\overline{CTS}$ each time it is ready to send a character. If $\overline{CTS}$ is asserted, the character is sent; if it is negated, the channel TxD remains in the high state and transmission is delayed until $\overline{CTS}$ is asserted. Changes in $\overline{CTS}$ as a character is being sent do not affect its transmission.
3–0	SB	Stop-bit length control. Selects the length of the stop bit appended to the transmitted character. Stop-bit lengths of 9/16th to 2 bits are programmable for 6–8 bit characters. Lengths of 1 1/16th to 2 bits are programmable for 5-bit characters. In all cases, the receiver checks only for a high condition at the center of the first stop-bit position, that is, one bit time after the last data bit or after the parity bit, if parity is enabled. If an external 1x clock is used for the transmitter, clearing bit 3 selects one stop bit and setting bit 3 selects 2 stop bits for transmission.

SB	5 Bits	6–8 Bits	SB	5 Bits	6–8 Bits	SB	5–8 Bits	SB	5–8 Bits
0000	1.063	0.563	0100	1.313	0.813	1000	1.563	1100	1.813
0001	1.125	0.625	0101	1.375	0.875	1001	1.625	1101	1.875
0010	1.188	0.688	0110	1.438	0.938	1010	1.688	1110	1.938
0011	1.250	0.750	0111	1.500	1.000	1011	1.750	1111	2.000

16.3.3 UART Status Registers (USR*n*)

The USR*n*, Figure 16-4, shows status of the transmitter, the receiver, and the FIFO.

	7	6	5	4	3	2	1	0
Field	RB	FE	PE	OE	TxEMP	TxRDY	FFULL	RxRDY
Reset	0000_0000							
R/W	Read only							
Address	MBAR + 0x104 (USR0), 0x144 (USR1)							

Figure 16-4. UART Status Registers (USR*n*)

Table 16-4 describes USR*n* fields.

Table 16-4. USR*n* Field Descriptions

Bits	Name	Description
7	RB	Received break. The received break circuit detects breaks that originate in the middle of a received character. However, a break in the middle of a character must persist until the end of the next detected character time. 0 No break was received. 1 An all-zero character of the programmed length was received without a stop bit. RB is valid only when RxRDY = 1. Only a single FIFO position is occupied when a break is received. Further entries to the FIFO are inhibited until RxD returns to the high state for at least one-half bit time, which is equal to two successive edges of the UART clock.
6	FE	Framing error. 0 No framing error occurred. 1 No stop bit was detected when the corresponding data character in the FIFO was received. The stop-bit check occurs in the middle of the first stop-bit position. FE is valid only when RxRDY = 1.
5	PE	Parity error. Valid only if RxRDY = 1. 0 No parity error occurred. 1 If UMR1*n*[PM] = 0x (with parity or force parity), the corresponding character in the FIFO was received with incorrect parity. If UMR1*n*[PM] = 11 (multidrop), PE stores the received A/D bit.
4	OE	Overrun error. Indicates whether an overrun occurs. 0 No overrun occurred. 1 One or more characters in the received data stream have been lost. OE is set upon receipt of a new character when the FIFO is full and a character is already in the shift register waiting for an empty FIFO position. When this occurs, the character in the receiver shift register and its break detect, framing error status, and parity error, if any, are lost. OE is cleared by the RESET ERROR STATUS command in UCR*n*.
3	TxEMP	Transmitter empty. 0 The transmitter buffer is not empty. Either a character is being shifted out, or the transmitter is disabled. The transmitter is enabled/disabled by programming UCR*n*[TC]. 1 The transmitter has underrun (both the transmitter holding register and transmitter shift registers are empty). This bit is set after transmission of the last stop bit of a character if there are no characters in the transmitter holding register awaiting transmission.
2	TxRDY	Transmitter ready. 0 The CPU loaded the transmitter holding register or the transmitter is disabled. 1 The transmitter holding register is empty and ready for a character. TxRDY is set when a character is sent to the transmitter shift register and when the transmitter is first enabled. If the transmitter is disabled, characters loaded into the transmitter holding register are not sent.

Table 16-4. USR*n* Field Descriptions (continued)

Bits	Name	Description
1	FFULL	FIFO full. This bit is equivalent to URF[FULL]. 0 The FIFO is not full but may hold unread characters. 1 A character was received and the receiver FIFO is now full. Any characters received when the FIFO is full are lost.
0	RxRDY	Receiver ready 0 The CPU has read the receiver buffer and no characters remain in the FIFO after this read. 1 One or more characters were received and are waiting in the receiver buffer FIFO.

16.3.4 UART Clock-Select Registers (UCSR*n*)

The UART clock-select registers (UCSR*n*) select an external clock on the URT_CLK input (divided by 1 or 16) or a prescaled CLKIN as the clocking source for the transmitter and receiver. See Section 16.5.1, "Transmitter/Receiver Clock Source." The transmitter and receiver can use different clock sources. To use CLKIN for both, set UCSR*n* to 0xDD.

	7 4	3 0
Field	RCS	TCS
Reset	0000_0000	
R/W	Write only	
Address	MBAR + 0x104 (UCSR0), 0x144 (UCSR1)	

Figure 16-5. UART Clock-Select Registers (UCSR*n*)

Table 16-5 describes UCSR*n* fields.

Table 16-5. UCSR*n* Field Descriptions

Bits	Name	Description
7–4	RCS	Receiver clock select. Selects the clock source for the receiver channel. 1101 Prescaled CLKIN 1110 URT_CLK divided by 16 1111 URT_CLK
3–0	TCS	Transmitter clock select. Selects the clock source for the transmitter channel. 1101 Prescaled CLKIN 1110 URT_CLK divided by 16 1111 URT_CLK

16.3.5 UART Command Registers (UCR*n*)

The UART command registers (UCR*n*), Figure 16-6, supply commands to the UART. Only multiple commands that do not conflict can be specified in a single write to a UCR*n*. For example, RESET TRANSMITTER and ENABLE TRANSMITTER cannot be specified in one write.

	7	6	4	3	2	1	0
Field	ENAB	MISC		TC		RC	
Reset	0000_0000						
R/W	Write only						
Address	MBAR + 0x108, 0x148						

Figure 16-6. UART Command Registers (UCR*n*)

Table 16-6 describes UCR*n* fields and commands. Examples in Section 16.5.2, "Transmitter and Receiver Operating Modes," show how these commands are used.

Table 16-6. UCR*n* Field Descriptions

Bits	Value	Command	Description
7	ENAB	—	Enable autobaud 0 Autobaud disabled. 1 Autobaud enabled. The transmission rate is calculated from the first received character. If the rate must be recalculated, ENAB must first be cleared and reset. UISR*n*[ABC] indicates a transmission rate has been calculated and loaded into the UART divider registers. UDU*n* and UDUL*n* must be initialized to 0x00 before enabling autobaud.
6–4	**MISC Field** (This field selects a single command.)		
	000	no command	—
	001	reset mode register pointer	Causes the mode register pointer to point to UMR1*n*.
	010	reset receiver	Immediately disables the receiver, clears USR*n*[FFULL,RxRDY], and reinitializes the receiver FIFO pointer. No other registers are altered. Because it places the receiver in a known state, use this command instead of RECEIVER DISABLE when reconfiguring the receiver.
	011	reset transmitter	Disables the transmitter and clears USR*n*[TxEMP,TxRDY]. No other registers are altered. Because it places the transmitter in a known state, use this command instead of TRANSMITTER DISABLE when reconfiguring the transmitter.
	100	reset error status	Clears USR*n*[RB,FE,PE,OE]. Also used in block mode to clear all error bits after a data block is received.
	101	reset break– change interrupt	Clears the delta break bit, UISR*n*[DB].
	110	start break	Forces TxD low. If the transmitter is empty, the break may be delayed up to one bit time. If the transmitter is active, the break starts when character transmission completes. The break is delayed until any character in the transmitter shift register is sent. Any character in the transmitter holding register is sent after the break. The transmitter must be enabled for the command to be accepted. This command ignores the state of $\overline{\text{CTS}}$.
	111	stop break	Causes TxD to go high (mark) within two bit times. Any characters in the transmitter buffer are sent.

Table 16-6. UCR*n* Field Descriptions (continued)

Bits	Value	Command	Description
3–2	**TC Field** (This field selects a single command)		
	00	no action taken	Causes the transmitter to stay in its current mode: if the transmitter is enabled, it remains enabled; if the transmitter is disabled, it remains disabled.
	01	transmitter enable	Enables operation of the channel's transmitter. USR*n*[TxEMP,TxRDY] are set. If the transmitter is already enabled, this command has no effect.
	10	transmitter disable	Terminates transmitter operation and clears USR*n*[TxEMP,TxRDY]. If a character is being sent when the transmitter is disabled, transmission completes before the transmitter becomes inactive. If the transmitter is already disabled, the command has no effect.
	11	—	Reserved, do not use.
1–0	**RC** (This field selects a single command)		
	00	no action taken	Causes the receiver to stay in its current mode. If the receiver is enabled, it remains enabled; if disabled, it remains disabled.
	01	receiver enable	If the UART module is not in multidrop mode (UMR1*n*[PM] ¦ 11), RECEIVER ENABLE enables the channel's receiver and forces it into search-for-start-bit state. If the receiver is already enabled, this command has no effect.
	10	receiver disable	Disables the receiver immediately. Any character being received is lost. The command does not affect receiver status bits or other control registers. If the UART module is programmed for local loop-back or multidrop mode, the receiver operates even though this command is selected. If the receiver is already disabled, the command has no effect.
	11	—	Reserved, do not use.

16.3.6 UART Receiver Buffers (URB*n*)

The receiver buffers contain one serial shift register and a 24-byte FIFO. RxD is connected to the serial shift register. The CPU reads from the top of the stack while the receiver shifts and updates from the bottom when the shift register is full (see Figure 16-24). RB contains the character in the receiver.

	7 … 0
Field	RB
Reset	0000_0000
R/W	Read only
Address	MBAR + 0x10C,0x14C

Figure 16-7. UART Receiver Buffer (URB*n*)

16.3.7 UART Transmitter Buffers (UTB*n*)

The transmitter buffers consist of a 24-byte FIFO and the transmitter shift register. The FIFO accepts characters from the bus master if the channel's USR*n*[TxRDY] is set. A write to the transmitter buffer clears TxRDY, inhibiting any more characters until the FIFO can accept more data. When the shift register is empty, it checks if the holding register has a valid character to be sent (TxRDY = 0). If there is a valid character, the shift register loads it and sets USR*n*[TxRDY] again. Writes to the transmitter buffer have no effect when the channel's TxRDY = 0 and when the transmitter is disabled.

Figure 16-8 shows UTB*n*. TB contains the character in the transmitter buffer.

	7 … 0
Field	TB
Reset	0000_0000
R/W	Write only
Address	MBAR + 0x10C,0x14C

Figure 16-8. UART Transmitter Buffers (UTB*n*)

16.3.8 UART Input Port Change Registers (UIPCR*n*)

The input port change registers (UIPCR*n*), Figure 16-9, hold the current state and the change-of-state for $\overline{\text{CTS}}$.

	7 … 5	4	3 … 1	0
Field	—	COS	111	CTS
Reset	0000_011			CTS
R/W	Read only			
Address	MBAR + 0x110 (UIPCR0), 0x150 (UIPCR1)			

Figure 16-9. UART Input Port Change Registers (UIPCR*n*)

Table 16-7 describes UIPCR*n* fields.

Table 16-7. UIPCR*n* Field Descriptions

Bits	Name	Description
7–5	—	Reserved, should be cleared.
4	COS	Change of state (high-to-low or low-to-high transition). 0 No change-of-state since the CPU last read UIPCR*n*. Reading UIPCR*n* clears UISR*n*[COS]. 1 A change-of-state longer than 25–50 μs occurred on the $\overline{\text{CTS}}$ input. UACR*n* can be programmed to generate an interrupt to the CPU when a change of state is detected.
3–1	—	Reserved, should be cleared.
0	CTS	Current state. Starting two serial clock periods after reset, CTS reflects the state of $\overline{\text{CTS}}$. If $\overline{\text{CTS}}$ is detected asserted at that time, COS is set, which initiates an interrupt if UACR*n*[IEC] is enabled. 0 The current state of the $\overline{\text{CTS}}$ input is asserted. 1 The current state of the $\overline{\text{CTS}}$ input is negated.

16.3.9 UART Auxiliary Control Registers (UACR*n*)

The UART auxiliary control registers (UACR*n*), Figure 16-10, control the input enable as well as the $\overline{\text{RTS}}$ control based on the receiver FIFO level.

	7	3	2	1	0
Field	—		RTSL		IEC
Reset	0000_0000				
R/W	Write only				
Address	MBAR + 0x110 (UACR0), 0x150 (UACR1)				

Figure 16-10. UART Auxiliary Control Registers (UACR*n*)

Table 16-8 describes UACR*n* fields.

Table 16-8. UACR*n* Field Descriptions

Bits	Name	Description
7–3	—	Reserved, should be cleared.
2–1	RTSL	$\overline{\text{RTS}}$ level. Determines when $\overline{\text{RTS}}$ is negated by the receiver relative to the fullness of the receiver FIFO. Note that $\overline{\text{RTS}}$ must first be manually asserted by a write to UOP0*n*. 00 FIFO level control disabled 01 Receiver FIFO Š 25% full 10 Receiver FIFO Š 50% full 11 Receiver FIFO Š 75% full Receiver overrun can be prevented by using the $\overline{\text{RTS}}$ output to control the $\overline{\text{CTS}}$ input of the transmitting device. Attempting to program a receiver and transmitter in the same channel for $\overline{\text{RTS}}$ control is not permitted and disables $\overline{\text{RTS}}$ control for both.
0	IEC	Input enable control. 0 Setting the corresponding UIPCR*n* bit has no effect on UISR*n*[COS]. 1 UISR*n*[COS] is set and an interrupt is generated when the UIPCR*n*[COS] is set by an external transition on the $\overline{\text{CTS}}$ input (if UIMR*n*[COS] = 1).

16.3.10 UART Interrupt Status/Mask Registers (UISR*n*/UIMR*n*)

The UART interrupt status registers (UISR*n*), Figure 16-11, provide status for all potential interrupt sources. UISR*n* contents are masked by UIMR*n*. If corresponding UISR*n* and UIMR*n* bits are set, the internal interrupt output is asserted. If a UIMR*n* bit is cleared, the state of the corresponding UISR*n* bit has no effect on the output.

NOTE

True status is provided in the UISR*n* regardless of UIMR*n* settings. UISR*n* is cleared when the UART module is reset.

	7	6			3	2	1	0
Field	COS	ABC	RXFIFO	TXFIFO	RXFTO	DB	FFULL/RxRDY	TxRDY
Reset	0000_0000							
R/W	Read only for status, write only for mask.							
Address	MBAR + 0x114 (UISR0), 0x154 (UISR1); MBAR + 0x114 (UIMR0), 0x154 (UIMR1)							

Figure 16-11. UART Interrupt Status/Mask Registers (UISR*n*/UIMR*n*)

Table 16-9 describes UISR*n* and UIMR*n* fields.

Table 16-9. UISR*n*/UIMR*n* Field Descriptions

Bits	Name	Description
7	COS	Change-of-state. 0 UIPCR*n*[COS] is not selected. 1 Change-of-state occurred on $\overline{\text{CTS}}$ and was programmed in UACR*n*[IEC] to cause an interrupt.
6	ABC	Autobaud calculation. 0 Autobaud is disabled or is waiting for the first receiver character. 1 The baud rate has been calculated and loaded into the clock source divider (UDU*n* and UDL*n*). After being set, this bit is cleared by writing to UCR*n*[ENAB].
5	RxFIFO	Receiver FIFO status. After being set, this bit is cleared by reading URB*n*. 0 FIFO status indication is disabled or the receiver status has not changed. 1 The receiver status has changed as programmed in URF*n*[RXS].
4	TxFIFO	Transmitter FIFO status. After being set, this bit is cleared by writing UTB*n*. 0 FIFO status indication is disabled or the transmitter status has not changed. 1 The transmitter status has changed as programmed in UTF*n*[TXS].
3	RxFTO	Receiver FIFO timeout. 0 No receiver FIFO timeout. This bit is cleared by reading all remaining data in the receiver FIFO, by receiving another character into the FIFO, or if the receiver is disabled. The count to timeout is restarted when RxFTO is cleared. 1 The receiver FIFO has timed out at 64 baud with unread data below the FIFO fullness level.
2	DB	Delta break. 0 No new break-change condition to report. Section 16.3.5, "UART Command Registers (UCRn)," describes the RESET BREAK-CHANGE INTERRUPT command. 1 The receiver detected the beginning or end of a received break.
1	FFULL/RxRDY	RxRDY (receiver ready) if UMR1*n*[FFULL/RxRDY] = 0; FIFO full (FFULL) if UMR1*n*[FFULL/RxRDY] = 1. Duplicate of USR*n*[FFULL/RxRDY].
0	TxRDY	Transmitter ready. This bit is the duplication of USR*n*[TxRDY]. 0 The transmitter holding register was loaded by the CPU or the transmitter is disabled. Characters loaded into the transmitter holding register when TxRDY = 0 are not sent. 1 The transmitter holding register is empty and ready to be loaded with a character.

16.3.11 UART Divider Upper/Lower Registers (UDU*n*/UDL*n*)

The UDU*n* registers (formerly called UBG1*n*) hold the MSB, and the UDL*n* registers (formerly UBG2*n*) hold the LSB of the preload value. UDU*n* and UDL*n* concatenate to provide a divider to CLKIN for transmitter/receiver operation, as described in Section 16.5.1.2.1, "CLKIN Baud Rates."

	7	0
Field	Divider MSB	
Reset	0000_0000	
R/W	Write only	
Address	MBAR + 0x118 (UDU0), 0x158 (UDU1)	

Figure 16-12. UART Divider Upper Registers (UDU*n*)

	7	0
Field	Divider LSB	
Reset	0000_0000	
R/W	Write only	
Address	MBAR + 0x11C (UDL0), 0x15C (UDL1)	

Figure 16-13. UART Divider Lower Registers (UDL*n*)

NOTE

The minimum value that can be loaded on the concatenation of UDU*n* with UDL*n* is 0x0002. Both UDU*n* and UDL*n* are write-only and cannot be read by the CPU.

16.3.12 UART Autobaud Registers (UABU*n*/UABL*n*)

The UABU*n* registers hold the MSB, and the UABL*n* registers hold the LSB of the calculated baud rate. If UCR*n*[ENAB] is set, the value in these registers is automatically loaded into UDU*n* and UDL*n*.

	7	0
Field	Autobaud MSB	
Reset	0000_0000	
R/W	Read only	
Address	MBAR + 0x120 (UABU0), 0x160 (UABU1)	

Figure 16-14. UART Autobaud Upper Registers (UABU*n*)

	7	0
Field	Autobaud LSB	
Reset	0000_0000	
R/W	Read only	
Address	MBAR + 0x124 (UABL0), 0x164 (UABL1)	

Figure 16-15. UART Autobaud Lower Registers (UABL*n*)

16.3.13 UART Transmitter FIFO Registers (UTF*n*)

The UTF*n* registers contain control and status bits for the transmitter FIFO. Note that some bits are read-only.

	7	6	5	4	0
Field	TXS		FULL	TXB	
Reset	1100_0000				
R/W	R/W		R	R	
Address	MBAR + 0x128 (UTF0), 0x168 (UTF1)				

Figure 16-16. UART Transmitter FIFO Registers (UTF*n*)

Table 16-10 describes UTF*n* fields.

Table 16-10. UTF*n* Field Descriptions

Bits	Name	Description
7–6	TXS	Transmitter status. When written to, these bits control the meaning of UISR*n*[TxFIFO]. 00 Inhibit transmitter FIFO status indication in UISR*n*. 01 Transmitter FIFO Š 25% empty 10 Transmitter FIFO Š 50% empty 11 Transmitter FIFO Š 75% empty When read, these bits indicate the emptiness level of the FIFO. 00 Transmitter FIFO < 25% empty 01 Transmitter FIFO Š 25% empty 10 Transmitter FIFO Š 50% empty 11 Transmitter FIFO Š 75% empty
5	FULL	Transmitter FIFO full. 0 Transmitter FIFO is not full and can be loaded with a character. 1 Transmitter FIFO is full. Characters loaded into the transmitter FIFO when it is full are not transmitted.
4–0	TXB	Transmitter buffer data level. Indicates the number of bytes, between 0 and 24, stored in the transmitter FIFO.

16.3.14 UART Receiver FIFO Registers (URF*n*)

The URF*n* registers contain control and status bits for the receiver FIFO. Note that some bits are read only.

	7	6	5	4	0
Field	RXS		FULL	RXB	
Reset	0000_0000				
R/W	R/W		R	R	
Address	MBAR + 0x12C (URF0), 0x16C (URF1)				

Figure 16-17. UART Receiver FIFO Registers (URF*n*)

Table 16-11 describes URF*n* fields.

Table 16-11. URF*n* Field Descriptions

Bits	Name	Description
7–6	RXS	$\overline{\text{Receiver status}}$. When written to, these bits control the meaning of UISR*n*[RxFIFO]. 00 Inhibit receiver FIFO status indication in UISR*n*. 01 Receiver FIFO Š 25% full 10 Receiver FIFO Š 50% full 11 Receiver FIFO Š 75% full When read, these bits indicate the emptiness level of the FIFO. 00 Receiver FIFO < 25% full 01 Receiver FIFO Š 25% full 10 Receiver FIFO Š 50% full 11 Receiver FIFO Š 75% full
5	FULL	Receiver $\overline{\text{FIFO full}}$. 0 Receiver FIFO is not full and can be loaded with a character. 1 Receiver FIFO is full. Characters loaded from the receiver when the FIFO is full are lost. This bit is identical to USR*n*[FFULL].
4–0	RXB	Receiver buffer data level. Indicates the number of bytes, between 0 and 24, stored in the receiver FIFO.

16.3.15 UART Fractional Precision Divider Control Registers (UFPD*n*)

The UFPD*n* registers allow greater accuracy when deriving a transmitter/receiver clock source from CLKIN. The use of the UFPD*n* registers is optional; if the contents are left in the reset state, code written for other ColdFire devices containing UART modules will not be affected by the addition of these registers. The contents of these registers allow the frequency to be divided by a factor of up to 16. When autobaud is used, these registers are updated automatically to reflect the clock rate being used. Host software can write to these registers to make fine adjustments to the clock rate. See Section 16.5.1.2, "Calculating Baud Rates," for an example of UFPD*n* programming.

	7	4	3	0
Field	—		FD	
Reset	0000_0000			
R/W	R/W			
Address	MBAR + 0x130 (UFPD0), 0x170 (UFPD1)			

Figure 16-18. UART Fractional Precision Divider Control Registers (UFPD*n*)

Table 16-12 describes UFPD*n* fields.

Table 16-12. UFPD*n* Field Descriptions

Bits	Name	Description
7–4	—	Reserved, should be cleared.
3–0	FD	Fractional divider. The value of these bits, from 0 to 15, determine the scale factor by which the clocking source for the transmitter and/or receiver is scaled.

16.3.16 UART Input Port Registers (UIP*n*)

The UIP registers, Figure 16-19, show the current state of the $\overline{\text{CTS}}$ input.

	7	1	0
Field	—		CTS
Reset	1111_1111		
R/W	Read only		
Address	MBAR + 0x134 (UIP0), 0x174 (UIP1)		

Figure 16-19. UART Input Port Registers (UIP*n*)

Table 16-13 describes UIP*n* fields.

Table 16-13. UIP*n* Field Descriptions

Bits	Name	Description
7–1	—	Reserved, should be cleared.
0	CTS	$\overline{\text{CTS}}$ state.The $\overline{\text{CTS}}$ value is latched and reflects the state of the input pin when UIP*n* is read. Note: This bit has the same function and value as UIPCR*n*[RTS]. 0 The current state of the $\overline{\text{CTS}}$ input is logic 0. 1 The current state of the $\overline{\text{CTS}}$ input is logic 1.

16.3.17 UART Output Port Command Registers (UOP1*n*/UOP0*n*)

The $\overline{\text{RTS}}$ output can be asserted by writing a 1 to UOP1*n*[RTS] and negated by writing a 1 to UOP0*n*[RTS]. See Figure 16-20.

	7	1	0
Field	—		RTS
Reset	0000_0000		
R/W	Write only		
Addr	UART0: MBAR + 0x138 (UOP1), 0x13C (UOP0); UART1 0x178 (UOP1), 0x17C (UOP0)		

Figure 16-20. UART Output Port Command Registers (UOP1/UOP0)

Table 16-14 describes UOP1 and UOP0 fields.

Table 16-14. UOP1/UOP0 Field Descriptions

Bits	Name	Description
7–1	—	Reserved, should be cleared.
0	RTS	Output port parallel output. Controls assertion (UOP1)/negation (UOP0) of $\overline{\text{RTS}}$ output. 0 Not affected. 1 Asserts $\overline{\text{RTS}}$ (UOP1). Negates $\overline{\text{RTS}}$ (UOP0).

16.4 UART Module Signal Definitions

Figure 16-21 shows both the external and internal signal groups.

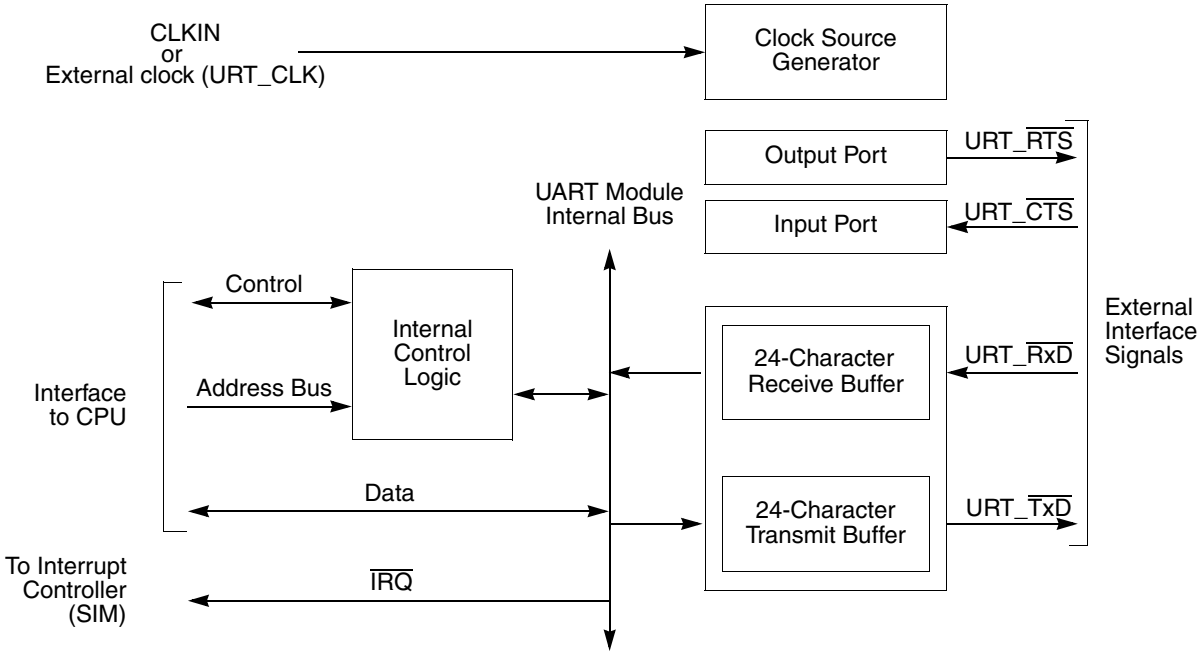

Figure 16-21. UART Block Diagram Showing External and Internal Interface Signals

An internal interrupt request signal ($\overline{IRQ}$) is provided to notify the interrupt controller of an interrupt condition. The output is the logical NOR of unmasked UISR*n* bits. The interrupt levels of the UART modules are programmed in SIM register ICR2. See Section 7.2, “Interrupt Controller Registers.”

Table 16-15 briefly describes the UART module signals.

NOTE

The terms ‘assertion’ and ‘negation’ are used to avoid confusion between active-low and active-high signals. ‘Asserted’ indicates that a signal is active, independent of the voltage level; ‘negated’ indicates that a signal is inactive.

Table 16-15. UART Module Signals

Signal	Description
Transmitter Serial Data Output (URT_TxD)	URT_TxD is held high (mark condition) when the transmitter is disabled, idle, or operating in the local loop-back mode. Data is shifted out on URT_TxD on the falling edge of the clock source, with the least significant bit (lsb) sent first.
Receiver Serial Data Input (URT_RxD)	Data received on URT_RxD is sampled on the rising edge of the clock source, with the lsb received first.
Clear-to-Send ($\overline{URT_CTS}$)	This input can generate an interrupt on a change of state.
Request-to-Send ($\overline{URT_RTS}$)	This output can be programmed to be negated or asserted automatically by either the receiver or the transmitter. It can control serial data flow when connected to a transmitter’s $\overline{CTS}$.
Clock (URT_CLK)	The UART’s external clock source. It can be used in 1x or 16x mode. When both the transmitter and receiver use the timer as the clock source (UCR = 0xDD), the 16x clock is driven out on UARTCLK. If either the transmitter or receiver use an external clock (1x or 16x), URT_CLK is an input.

Figure 16-22 shows a signal configuration for a UART/RS-232 interface.

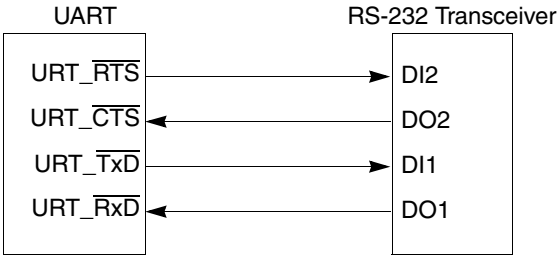

Figure 16-22. UART/RS-232 Interface

16.5 Operation

This section describes operation of the clock source generator, transmitter, and receiver.

16.5.1 Transmitter/Receiver Clock Source

CLKIN serves as the basic timing reference for the clock source generator logic, which consists of a clock generator and a programmable 16+4-bit divider (UDU, UDL, UFPD) dedicated to the UART. The clock generator cannot produce standard baud rates if CLKIN is used, so the 16-bit divider should be used.

16.5.1.1 Programmable Divider

As Figure 16-23 shows, the UART transmitter and receiver can use the following clock sources:

- An external clock signal on the URT_CLK pin that can be divided by 16. When not divided, URT_CLK provides a synchronous clock mode; when divided by 16, it is asynchronous.
- CLKIN supplies an asynchronous clock source that is prescaled by 32 and then divided by the 16-bit value programmed in UDU*n* and UDL*n*. See Section 16.3.11, "UART Divider Upper/Lower Registers (UDUn/UDLn)." The precision of this clock source can be tuned using the 4-bit value programmed in UFPD*n*.

Note that when autobaud mode is enabled, the UFPD*n*, UDU*n*, and UDL*n* are automatically loaded with the calculated baud rate. However, the calculated value can be overridden by a programmed value at any time.

The choice of URT_CLK or CLKIN is programmed in the UCSR.

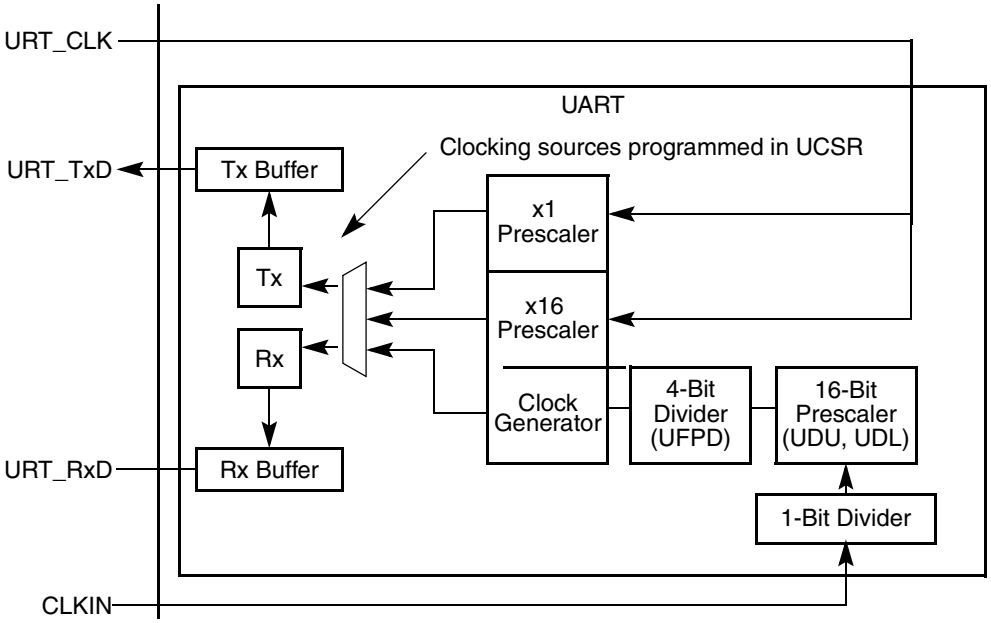

Figure 16-23. Clocking Source Diagram

16.5.1.2 Calculating Baud Rates

The following sections describe how to calculate baud rates.

16.5.1.2.1 CLKIN Baud Rates

When CLKIN is the UART clocking source, it goes through a divide-by-32 prescaler and then passes through the 16-bit divider of the concatenated UDU*n* and UDL*n* registers. The UFPD register can be used

to improve the accuracy of the clock source as shown in the following example using a 48 MHz CLKIN and 230kbs UART baud rate:

1. UART Divider= CLKIN / (16 x 2 x UART Baud Rate)
   = 48E06 / (32 x 230E03)
   = 6.52
   = 6 (truncate to lowest whole number)
   UDU = 0x00, UDL = 0x06
2. The truncation has resulted in an effective 8.7% error (0.52/6)
3. Using the formula Fractional Divider = (truncated remainder * 16)
   = 0.52 * 16
   = 8.32
   = 8 (truncate to nearest whole number)
   UFPD = 0x08
4. This now gives an effective total error in the baud rate as:
   %Error = 100 x (Truncated remainder) / (16 x (UD + UFPD/16)]
   = 100 x 0.32 / (16 x (6 + 8/16))
   = 32 / 104
   = 0.31%

16.5.1.2.2 External Clock

An external source clock (URT_CLK) can be used as is or divided by 16.

$$\text{Baudrate} = \frac{\text{Externalclockfrequency}}{\text{16or1}}$$

16.5.1.2.3 Autobaud Detection

The UART can determine the clock rate of a received character stream from the timing of the received pattern. If UCR*n*[ENAB] is set, the autobaud detector searches for a low level on URT_RxD, indicating a start bit. Start-bit length is measured until URT_RxD returns to a high level, then the transmission rate is calculated and loaded into UDU*n*, UDL*n*, and UFPD*n*.

The calculated transmission rate can be determined by reading UABU*n* and UABL*n*. Errors may occur in the calculation of high transmission rates due to distortion effects from the external drivers. If the calculated rate is inaccurate, UDU*n*, UDL*n*, and UFPD*n* must be written with the appropriate value as soon as possible to ensure that characters are properly received by the UART. The first character is always correctly captured, even though the transmission rate is not yet calculated.

The first character must be an odd character such as ‘a’ or ‘A’ to ensure that it contains an isolated start bit. The parity mode can be determined by monitoring subsequent characters.

The process for using the autobaud detector is as follows:

- UDU*n*, UDL*n*, and UFPD*n* must be initialized to 0x00.
- The receiver and transmitter clock sources must be set to TIMER (UCSR = 0xDD).
- Autobaud must be enabled (UCR[ENAB] = 1).
- The receiver must be enabled (UCR[RC] = 01).

Once enabled, the autobaud detector can calculate the transmission rate only once. If a new calculation is required, UCR[ENAB] must first be cleared and then set again. Thus, a new UART connection cannot be hot-plugged into an active UART connection if that connection is operating at a different rate without first reinitializing the autobaud detector.

16.5.2 Transmitter and Receiver Operating Modes

Figure 16-24 is a functional block diagram of the transmitter and receiver showing the command and operating registers, which are described generally in the following sections and described in detail in Section 16.3, "Register Descriptions."

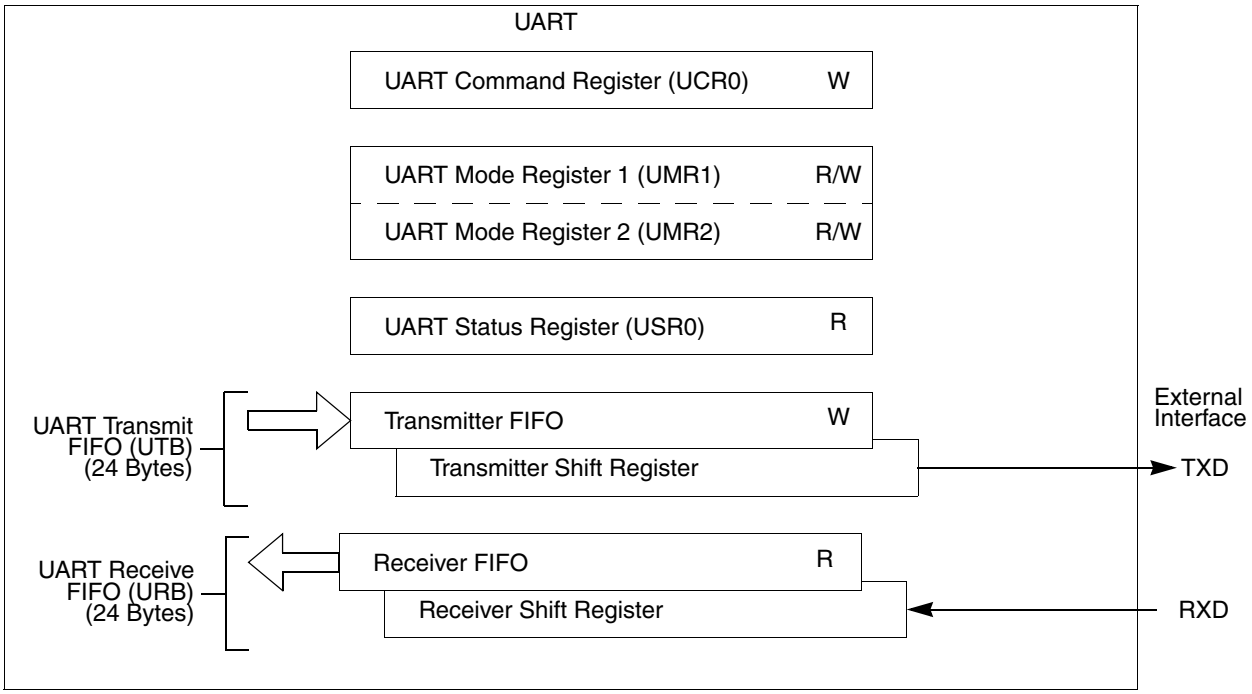

Figure 16-24. Transmitter and Receiver Functional Diagram

16.5.2.1 Transmitting

The transmitter is enabled through the UART command register (UCR*n*). When it is ready to accept a character, the UART sets USR*n*[TxRDY]. The transmitter converts parallel data from the CPU to a serial bit stream on TxD. It automatically sends a start bit followed by the programmed number of data bits, an optional parity bit, and the programmed number of stop bits. The lsb is sent first. Data is shifted from the transmitter output on the falling edge of the clock source.

After the stop bits are sent, if no new character is in the transmitter holding register, the TxD output remains high (mark condition) and the transmitter empty bit, USR*n*[TxEMP], is set. Transmission resumes and TxEMP is cleared when the CPU loads a new character into the UART transmitter buffer (UTB*n*). If the transmitter receives a disable command, it continues until any character in the transmitter shift register is completely sent.

If the transmitter is reset through a software command, operation stops immediately (see Section 16.3.5, “UART Command Registers (UCRn)”). The transmitter is reenabled through the UCR*n* to resume operation after a disable or software reset.

If the clear-to-send operation is enabled, $\overline{\text{CTS}}$ must be asserted for the character to be transmitted. If $\overline{\text{CTS}}$ is negated in the middle of a transmission, the character in the shift register is sent and TxD remains in mark state until $\overline{\text{CTS}}$ is reasserted. If the transmitter is forced to send a continuous low condition by issuing a START BREAK command, the transmitter ignores the state of $\overline{\text{CTS}}$.

If the transmitter is programmed to automatically negate $\overline{\text{RTS}}$ when a message transmission completes, $\overline{\text{RTS}}$ must be asserted manually before a message is sent. In applications in which the transmitter is disabled after transmission is complete and $\overline{\text{RTS}}$ is appropriately programmed, $\overline{\text{RTS}}$ is negated one bit time after the character in the shift register is completely transmitted. The transmitter must be manually reenabled by reasserting $\overline{\text{RTS}}$ before the next message is to be sent.

The transmitter must be enabled prior to accepting a START BREAK command. If the transmitter is disabled while the BREAK is active, the BREAK is not terminated. The BREAK can only be terminated by using the STOP BREAK command.

Figure 16-25 shows the functional timing information for the transmitter.

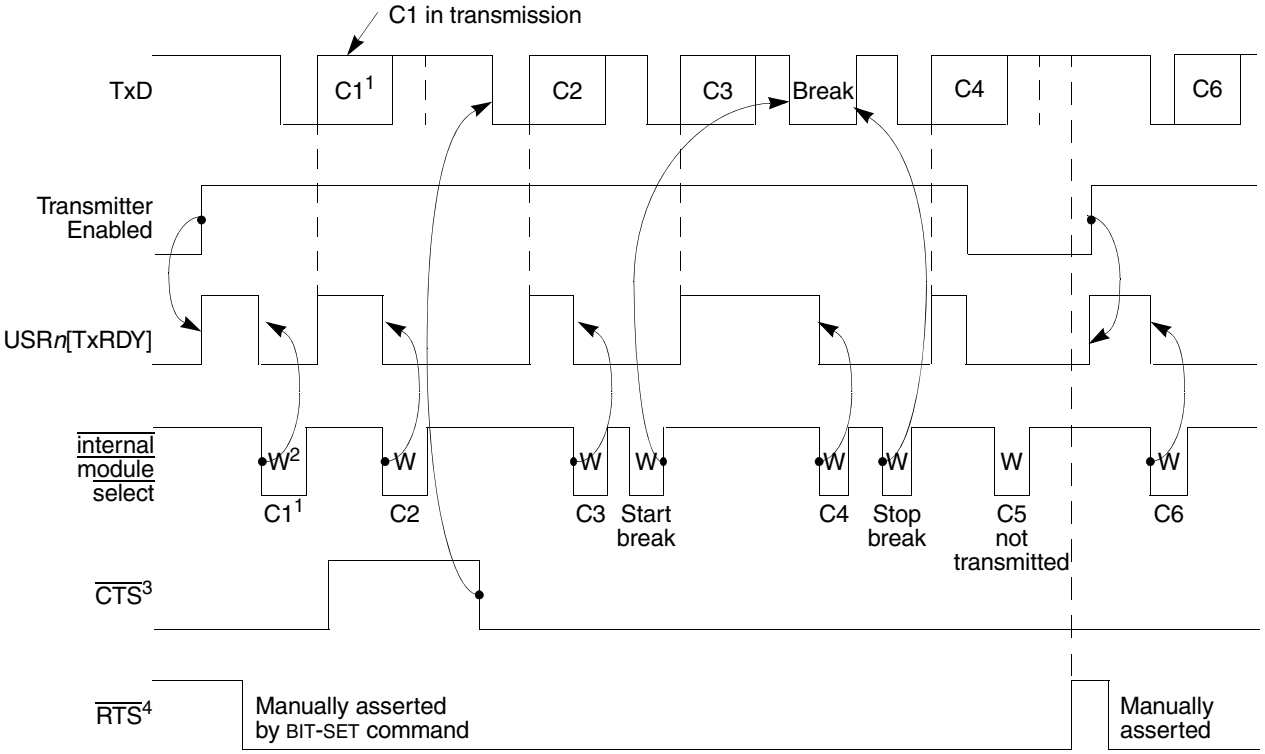

[1] C*n* = transmit characters
[2] W = write
[3] UMR2*n*[TxCTS] = 1
[4] UMR2*n*[TxRTS] = 1

Figure 16-25. Transmitter Timing

16.5.2.2 Receiver

The receiver is enabled through its UCR*n*, as described in Section 16.3.5, "UART Command Registers (UCRn)." Figure 16-26 shows receiver functional timing.

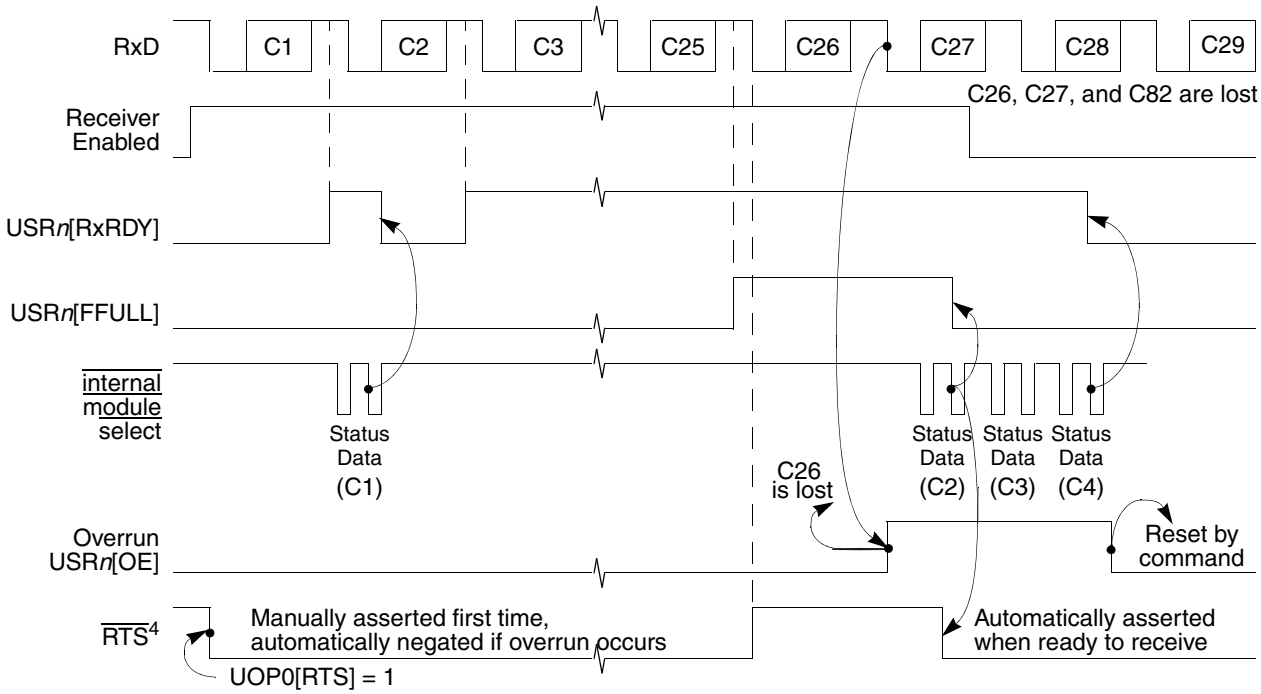

Figure 16-26. Receiver Timing

When the receiver detects a high-to-low (mark-to-space) transition of the start bit on RxD, the state of RxD is sampled each 16× clock for eight clocks, starting one-half clock after the transition (asynchronous operation) or at the next rising edge of the bit time clock (synchronous operation). If RxD is sampled high, the start bit is invalid and the search for the valid start bit begins again.

If RxD is still low, a valid start bit is assumed and the receiver continues sampling the input at one-bit time intervals, at the theoretical center of the bit, until the proper number of data bits and parity, if any, is assembled and one stop bit is detected. Data on the RxD input is sampled on the rising edge of the programmed clock source. The lsb is received first. The data is then transferred to a receiver holding register and USR*n*[RxRDY] is set. If the character is less than eight bits, the most significant unused bits in the receiver holding register are cleared.

After the stop bit is detected, the receiver immediately looks for the next start bit. However, if a non-zero character is received without a stop bit (framing error) and RxD remains low for one-half of the bit period after the stop bit is sampled, the receiver operates as if a new start bit were detected. Parity error, framing error, overrun error, and received break conditions set the respective PE, FE, OE, RB error, and break flags in the USR*n* at the received character boundary and are valid only if USR*n*[RxRDY] is set.

If a break condition is detected (RxD is low for the entire character including the stop bit), a character of all zeros is loaded into the receiver holding register (RHR) and USR*n*[RB,RxRDY] are set. RxD must return to a high condition for at least one-half bit time before a search for the next start bit begins.

The receiver detects the beginning of a break in the middle of a character if the break persists through the next character time. If the break begins in the middle of a character, the receiver places the damaged character in the Rx FIFO stack and sets the corresponding USR*n* error bits and USR*n*[RxRDY]. Then, if the break lasts until the next character time, the receiver places an all-zero character into the Rx FIFO and sets USR*n*[RB,RxRDY].

16.5.2.3 Transmitter FIFO

Whenever the CPU writes a character for transmission into UTB, the character is placed into the 24-byte transmitter FIFO. UTB fills the last spot in the FIFO and holds the last character to be transmitted. Visibility into the status of the FIFO is provided by various bits and interrupts, as shown in Table 16-16.

Table 16-16. Transmitter FIFO Status Bits

Status Bit	Indicated Condition	Interrupt
USR[TxEMP] = 1	The transmitter FIFO and shift register are empty and a data underrun occurred.	
USR[TxRDY] = 1	At least one FIFO stage is available for a character to be transmitted. If this bit is cleared, the FIFO is full and a subsequent write to the FIFO will be ignored.	Yes
USR[FFULL] = 1	The programmed level of emptiness (UTF[TXS]) has been reached.	Yes
UTF[TXS]	Indicates the level of emptiness of the transmitter FIFO	
UTF[TXB]	Indicates the number of characters, 0–24, in the transmitter FIFO	

16.5.2.4 Receiver FIFO

The FIFO stack is used in the UART's receiver buffer logic. The FIFO is 24 bytes deep. The receive buffer consists of the FIFO and a receiver shift register connected to the RxD (see Figure 16-24). Data is assembled in the receiver shift register and loaded into the top empty receiver holding register position of the FIFO. Similar to the transmitter, several status bits and interrupts provide visibility into the status of the FIFO.

In addition to the data byte, three status bits, parity error (PE), framing error (FE), and received break (RB), are appended to each data character in the FIFO; OE (overrun error) is not appended. By programming the ERR bit in the channel's mode register (UMR1*n*), status is provided in character or block modes.

USR*n*[RxRDY] is set when at least one character is available to be read by the CPU. A read of the receiver buffer produces an output of data from the top of the FIFO stack. After the read cycle, the data at the top of the FIFO stack and its associated status bits are popped and the receiver shift register can add new data at the bottom of the stack. The FIFO-full status bit (FFULL) is set if all 24 stack positions are filled with data. Either the RxRDY or FFULL bit can be selected to cause an interrupt.

The two error modes are selected by UMR1*n*[ERR] as follows:

- In character mode (UMR1*n*[ERR] = 0), status is given in the USR*n* for the character at the top of the FIFO.
- In block mode, the USR*n* shows a logical OR of all characters reaching the top of the FIFO stack since the last RESET ERROR STATUS command. Status is updated as characters reach the top of the FIFO stack. Block mode offers a data-reception speed advantage where the software overhead of error-checking each character cannot be tolerated. However, errors are not detected until the check is performed at the end of an entire message—the faulting character in the block is not identified.

In either mode, reading the USR*n* does not affect the FIFO. The FIFO is popped only when the receive buffer is read. The USR*n* should be read before reading the receive buffer. If all 24 receiver holding registers are full, a new character is held in the receiver shift register until space is available. However, if a second new character is received, the character in the receiver shift register is lost, the FIFO is unaffected, and USR*n*[OE] is set when the receiver detects the start bit of the new overrunning character.

Visibility into the status of the FIFO is provided by various bits and interrupts, as shown in Table 16-17.

Table 16-17. Receiver FIFO Status Bits

Status Bit	Indicated Condition	Interrupt
USR[FFULL] = 1	All FIFO positions contain data	Yes
USR[RxRDY] = 1	At least one character is available to be read by the CPU.	Yes
USR[RxFIFO] = 1	The programmed level of fullness (UTF[RXS]) has been reached.	Yes
USR[RxFTO] = 1	The receiver FIFO holds unread data, and the FIFO status has not changed in at least 64 receiver clocks.	Yes
URF[RXS]	Indicates the level of fullness of the receiver FIFO	
URF[RXB]	Indicates the number of characters, 0–24, in the receiver FIFO.	

To support flow control, the receiver can be programmed to automatically negate and assert $\overline{\text{RTS}}$, in which case the receiver automatically negates $\overline{\text{RTS}}$ when a valid start bit is detected and the FIFO stack is full. The receiver asserts $\overline{\text{RTS}}$ when a FIFO position becomes available; therefore, overrun errors can be prevented by connecting $\overline{\text{RTS}}$ to the $\overline{\text{CTS}}$ input of the transmitting device.

NOTE

The receiver can still read characters in the FIFO stack if the receiver is disabled. If the receiver is reset, the FIFO stack, $\overline{\text{RTS}}$ control, all receiver status bits, and interrupt requests are reset. No more characters are received until the receiver is reenabled.

16.5.3 Looping Modes

The UART can be configured to operate in various looping modes as shown in Figure 16-26. These modes are useful for local and remote system diagnostic functions and are described in the following paragraphs and in Section 16.3, “Register Descriptions.”

The UART’s transmitter and receiver should be disabled when switching between modes, as the selected mode is activated immediately upon mode selection, regardless of whether a character is being received or transmitted.

16.5.3.1 Automatic Echo Mode

In automatic echo mode, shown in Figure 16-27, the UART automatically resends received data bit by bit. The local CPU-to-receiver communication continues normally, but the CPU-to-transmitter link is disabled. In this mode, received data is clocked on the receiver clock and resent on TxD. The receiver must be enabled, but the transmitter need not be.

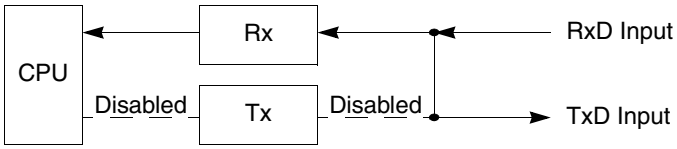

Figure 16-27. Automatic Echo

Because the transmitter is inactive, USR*n*[TxEMP,TxRDY] are inactive and data is sent as it is received. Received parity is checked but is not recalculated for transmission. Character framing is also checked, but stop bits are sent as they are received. A received break is echoed as received until the next valid start bit is detected. Autobaud operation does not affect automatic echo mode; that is, the first character received is correctly echoed back.

16.5.3.2 Local Loop-Back Mode

Figure 16-28 shows how TxD and RxD are internally connected in local loop-back mode. This mode is for testing the operation of a local UART module channel by sending data to the transmitter and checking data assembled by the receiver to ensure proper operations.

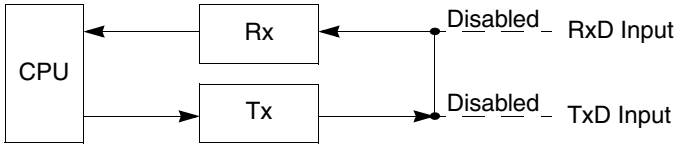

Figure 16-28. Local Loop-Back

Features of this local loop-back mode are as follows:

- Transmitter and CPU-to-receiver communications continue normally in this mode.
- RxD input data is ignored
- TxD is held marking
- The receiver is clocked by the transmitter clock. The transmitter must be enabled, but the receiver need not be.

16.5.3.3 Remote Loop-Back Mode

In remote loop-back mode, shown in Figure 16-29, the channel automatically transmits received data bit by bit on the TxD output. The local CPU-to-transmitter link is disabled. This mode is useful in testing receiver and transmitter operation of a remote channel. For this mode, the transmitter uses the receiver clock.

Because the receiver is not active, received data cannot be read by the CPU and error status conditions are inactive. Received parity is not checked and is not recalculated for transmission. Stop bits are sent as they are received. A received break is echoed as received until the next valid start bit is detected.

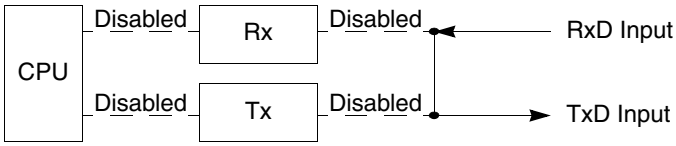

Figure 16-29. Remote Loop-Back

16.5.4 Multidrop Mode

Setting UMR1*n*[PM] programs the UART to operate in a wake-up mode for multidrop or multiprocessor applications. In this mode, a master can transmit an address character followed by a block of data characters targeted for one of up to 256 slave stations.

Although slave stations have their channel receivers disabled, they continuously monitor the master's data stream. When the master sends an address character, the slave receiver channel notifies its respective CPU by setting USR*n*[RxRDY] and generating an interrupt (if programmed to do so). Each slave station CPU then compares the received address to its station address and enables its receiver if it wishes to receive the subsequent data characters or block of data from the master station. Slave stations not addressed continue monitoring the data stream. Data fields in the data stream are separated by an address character. After a slave receives a block of data, its CPU disables the receiver and repeats the process.Functional timing information for multidrop mode is shown in Figure 16-30.

A character sent from the master station consists of a start bit, a programmed number of data bits, an address/data (A/D) bit flag, and a programmed number of stop bits. A/D = 1 indicates an address character; A/D = 0 indicates a data character. The polarity of A/D is selected through UMR1*n*[PT]. UMR1*n* should be programmed before enabling the transmitter and loading the corresponding data bits into the transmit buffer.

In multidrop mode, the receiver continuously monitors the received data stream, regardless of whether it is enabled or disabled. If the receiver is disabled, it sets the RxRDY bit and loads the character into the receiver holding register FIFO stack provided the received A/D bit is a one (address tag). The character is discarded if the received A/D bit is zero (data tag). If the receiver is enabled, all received characters are transferred to the CPU through the receiver holding register stack during read operations.

In either case, the data bits are loaded into the data portion of the stack while the A/D bit is loaded into the status portion of the stack normally used for a parity error (USR*n*[PE]).

Detection of breaks and framing or overrun errors operates normally. The A/D bit replaces the parity bit, so parity is neither calculated nor checked. Messages in this mode may still contain error detection and correction information. If 8-bit characters are not required, software can be used to calculate parity and append it to the 5-, 6-, or 7-bit character.

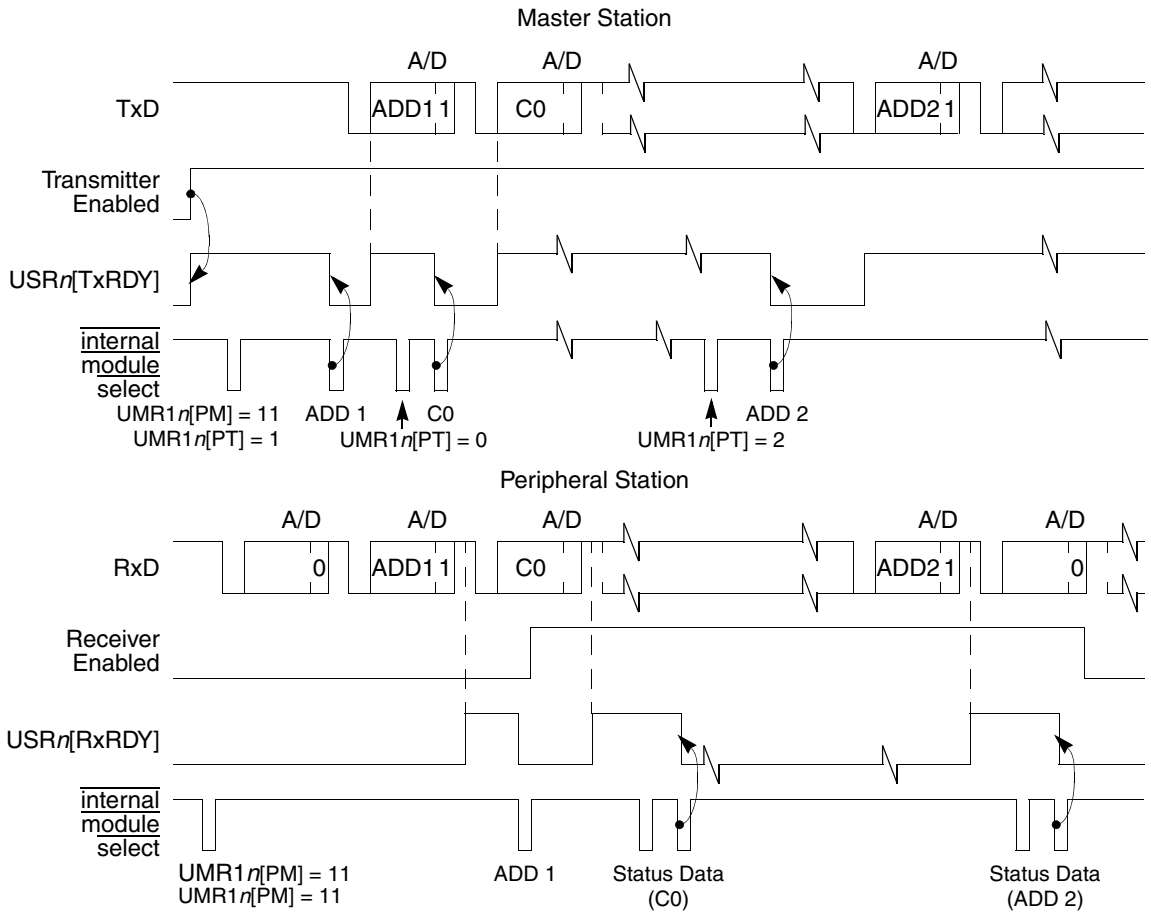

Figure 16-30. Multidrop Mode Timing Diagram

16.5.5 Bus Operation

This section describes bus operation during read, write, and interrupt acknowledge cycles to the UART module.

16.5.5.1 Read Cycles

The UART module responds to reads with byte data. Reserved registers return zeros.

16.5.5.2 Write Cycles

The UART module accepts write data as bytes. Write cycles to read-only or reserved registers complete normally without exception processing, but data is ignored.

16.5.5.3 Interrupt Acknowledge Cycles

An internal interrupt request signal notifies the interrupt controller of any unmasked interrupt conditions. The interrupt priority level is programmed in ICR2.

16.5.6 Programming

The software flowchart, Figure 16-31, consists of the following:

- UART module initialization—These routines consist of SINIT and CHCHK (sheets 1 and 2). Before SINIT is called at system initialization, the calling routine allocates 2 words on the system stack. On return to the calling routine, SINIT passes UART status data on the stack. If SINIT finds no errors, the transmitter and receiver are enabled. SINIT calls CHCHK to perform the checks. When called, SINIT places the UART in local loop-back mode and checks for the following errors:
  - Transmitter never ready
  - Receiver never ready
  - Parity error
  - Incorrect character received
- I/O driver routine—This routine (sheets 4 and 5) consists of INCH, the terminal input character routine which gets a character from the receiver, and OUTCH, which sends a character to the transmitter.
- Interrupt handling—Consists of SIRQ (sheet 4), which is executed after the UART module generates an interrupt caused by a change-in-break (beginning of a break). SIRQ then clears the interrupt source, waits for the next change-in-break interrupt (end of break), clears the interrupt source again, then returns from exception processing to the system monitor.

16.5.6.1 UART Module Initialization Sequence

NOTE

UART module registers can be accessed by word or byte operations, but only data byte D[7:0] is valid.

Figure 16-31 shows the UART module initialization sequence.

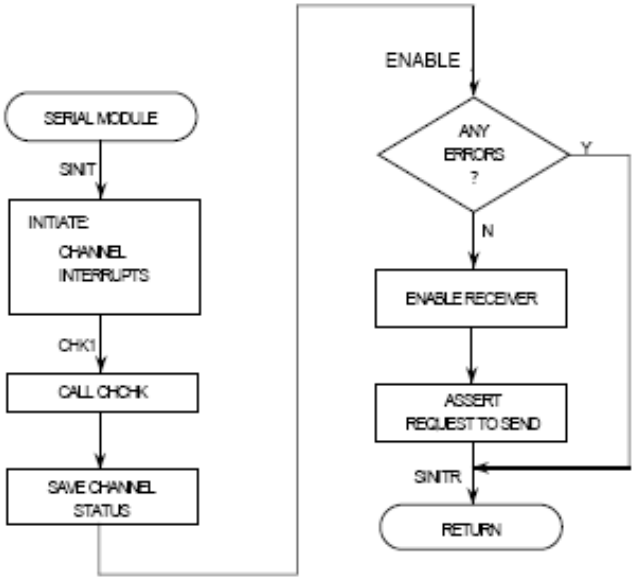

Figure 16-31. UART Mode Programming Flowchart (Sheet 1 of 5)

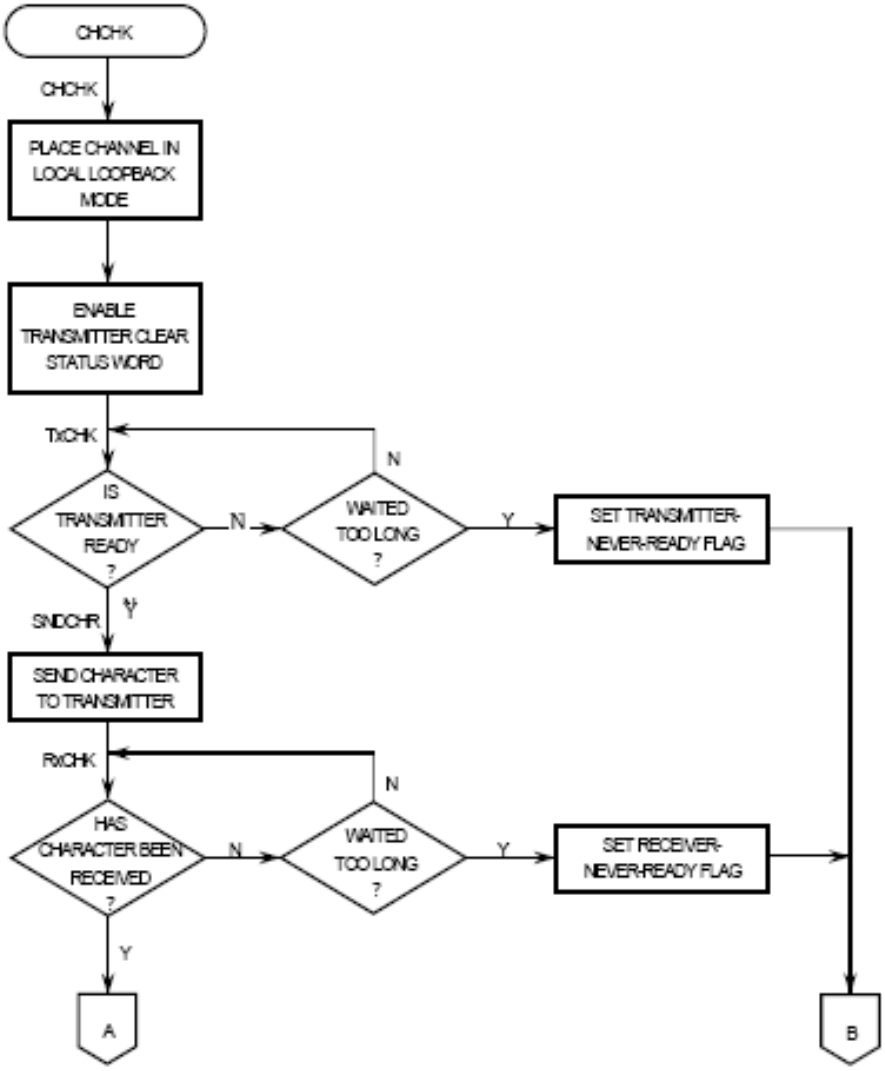

Figure 16-31. UART Mode Programming Flowchart (Sheet 2 of 5)

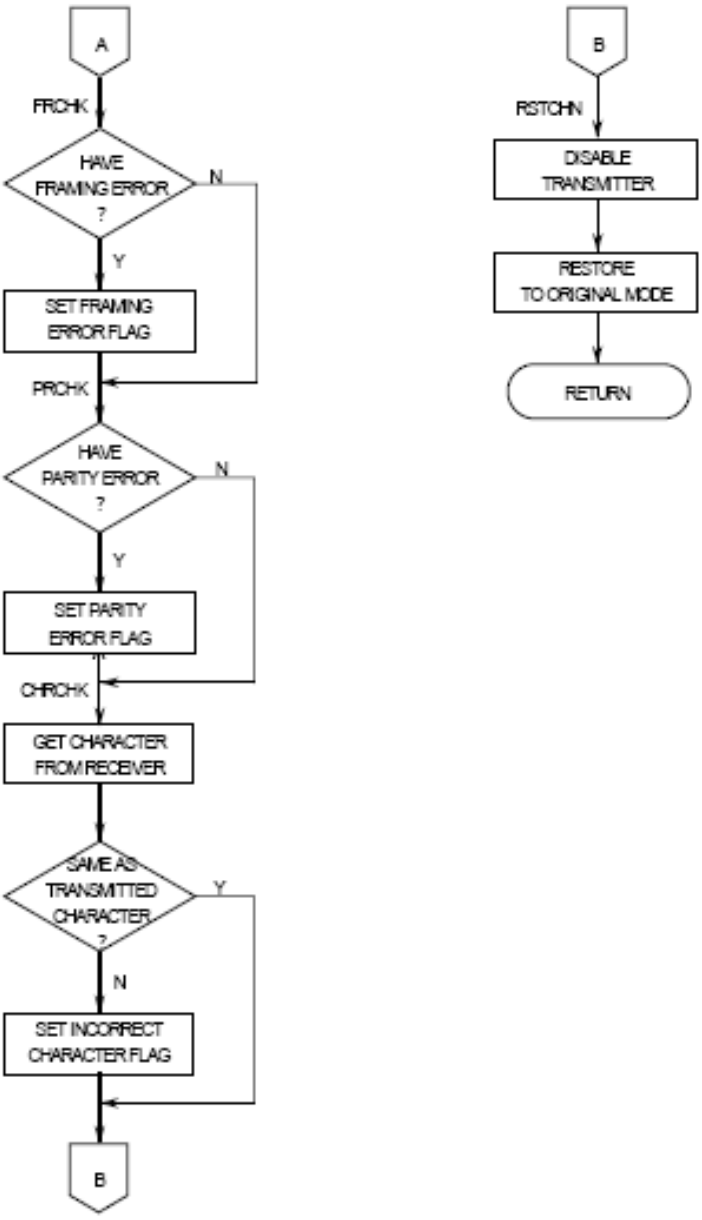

Figure 16-31. UART Mode Programming Flowchart (Sheet 3 of 5)

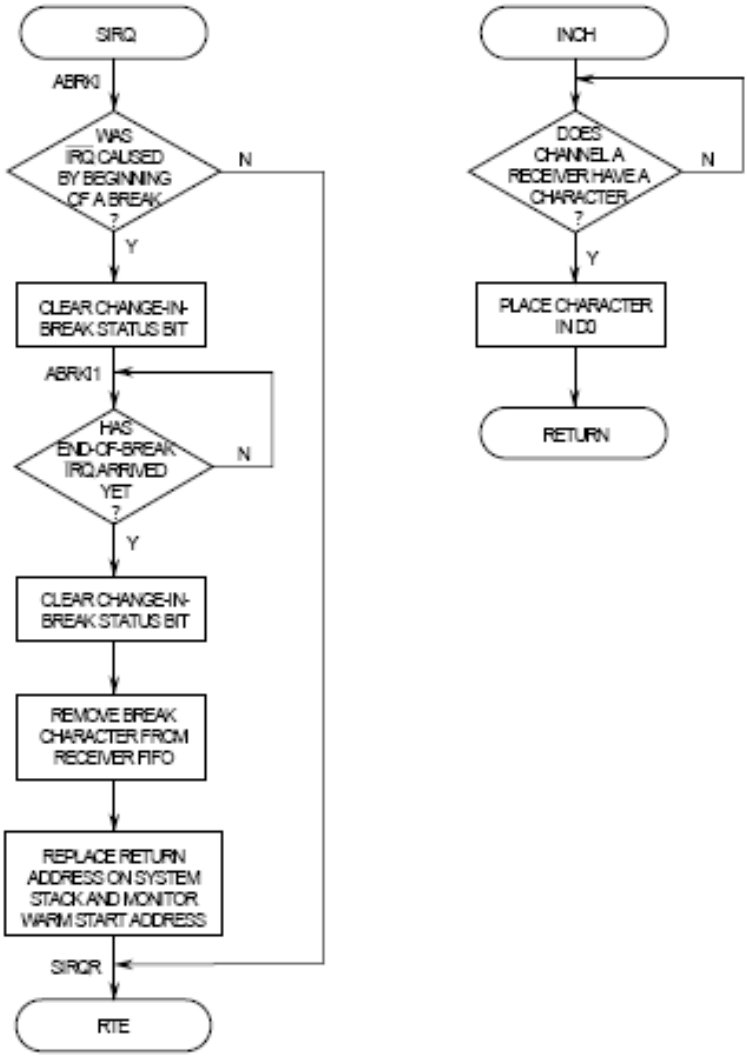

Figure 16-31. UART Mode Programming Flowchart (Sheet 4 of 5)

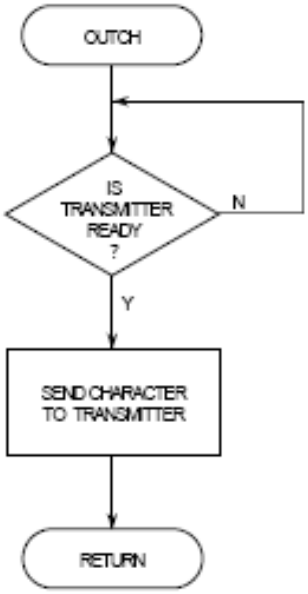

Figure 16-31. UART Mode Programming Flowchart (Sheet 5 of 5)

Chapter 17
General Purpose I/O Module

This chapter describes the operation and programming model of the three general-purpose I/O (GPIO) ports on the MCF5272. It includes details about pin assignment, direction-control, and data registers.

17.1 Overview

The MCF5272 provides up to 48 general-purpose I/O signals. The GPIO signal multiplexing is shown in Table 17-1. All GPIO pins are individually programmable as inputs or outputs. At reset, all configurable multifunction GPIO pins default to general purpose inputs and all multifunction pins that are not shared with a GPIO pin default to high impedance. To avoid indeterminate read values and reduce power consumption, internal pull-up resistors are active immediately upon reset, and remain active until the corresponding port direction registers are programmed.

The general-purpose I/O signals are configured as three ports, each having up to 16 signals. These three general-purpose I/O ports are shared with other signals as follows:

Table 17-1. GPIO Signal Multiplexing

GPIO Signal	Also Multiplexed on the Same Pins
PA[6:0]	External USB transceiver interface signals
PA7	QSPI_CS3 and DOUT3
PA[15:8]	PLIC TDM ports 0 and 1
PB[7:0]	UART1 signals and the bus control signal $\overline{TA}$
PB[15:8]	Ethernet controller signals
PC[15:0]	Data bus signals D[15:0]. These are only available (as GPIO) when the device is configured for 16-bit data bus mode using the WSEL signal

Control registers for each port select the function (GPIO or peripheral pin) assigned to each pin. Pins can have as many as four functions including GPIO. There is no configuration register for GPIO port C because its pins are configured by WSEL during device reset.

An additional port, port D, has only a control register which is used to configure the pins that are not multiplexed with any GPIO signals.

17.2 Port Control Registers

The port control registers are used to configure all pins that carry signals multiplexed from different on-chip modules. Each pin is configured with a two-bit field. Pin functions are referred to as function 0b00–0b11. The function 0 signals corresponding to GPIO ports A and B are immediately available after reset.

Wherever a signal function includes a GPIO port bit, the function defaults to an input after a reset and can be read in the corresponding port data register.

Pin functions are generally grouped logically. For example, all UART1 signals are multiplexed with port B and have the control register function code of 0b01.

There is no port C control register. Port C is enabled when the 16-bit-wide external data bus mode is selected at reset by the input level on QSPI_DOUT/WSEL. The port D control register is used to configure pins that have multiple functions (0b01 through 0b11) but no GPIO function.

CAUTION

Do not attempt to program a pin function that is not defined. Where no function is defined, the function code is labeled ‘Reserved’ and is considered invalid. Programming any control register field with a reserved value has an unpredictable effect on the corresponding pin’s operation.

Reserved function codes cannot be reliably read. Attempts to read them yield undetermined values.

Table 17-2. GPIO Port Register Memory Map

MBAR Offset	[31:24]	[23:16]	[15:8]	[7:0]
0x0080	Port A Control Register (PACNT)			
0x0084	Port A Data Direction Register (PADDR)		Reserved	
0x0086	Reserved		Port A Data Register (PADAT)	
0x0088	Port B Control Register (PBCNT)			
0x008C	Port B Data Direction Register (PBDDR)		Reserved	
0x008E	Reserved		Port B Data Register (PBDAT)	
0x0094	Port C Data Direction Register (PCDDR)		Reserved	
0x0096	Reserved		Port C Data Register (PCDAT)	
0x0098	Port D Control Register (PDCNT)			

17.2.1 Port A Control Register (PACNT)

PACNT is used to configure pins that source signals multiplexed with GPIO port A.

	31 30	29 28	27 26	25 24	23 22	21 20	19 18	17 16
Field	PACNT15	PACNT14	PACNT13	PACNT12	PACNT11	PACNT10	PACNT9	PACNT8
Reset	0000_0000_0000_0000							
R/W	Read/Write							

	15 14	13 12	11 10	9 8	7 6	5 4	3 2	1 0
Field	PACNT7	PACNT6	PACNT5	PACNT4	PACNT3	PACNT2	PACNT1	PACNT0
Reset	0000_0000_0000_0000							
R/W	Read/Write							
Addr	MBAR + 0x0080							

Figure 17-1. Port A Control Register (PACNT)

Table 17-3 describes PACNT fields. Table 17-4 provides the same information organized by function.

Table 17-3. PACNT Field Descriptions

Bits	Name	Description
31–30	PACNT15	Configure pin M3. If this pin is programmed to function as $\overline{\text{INT6}}$, it is not available as a GPIO. 00 PA15 01 DGNT1 1*x* Reserved
29–28	PACNT14	Configure pin M2 00 PA14 01 DREQ1 1*x* Reserved
27–26	PACNT13	Configure pin L3 00 PA13 01 DFSC3 1*x* Reserved
25–24	PACNT12	Configure pin L2 00 PA12 01 DFSC2 1*x* Reserved
23–22	PACNT11	Configure pin L1 00 PA11 01 Reserved 10 QSPI_CS1 11 Reserved
21–20	PACNT10	Configure pin K5 00 PA10 01 DREQ0 1*x* Reserved
19–18	PACNT9	Configure pin J3 00 PA9 01 DGNT0 1*x* Reserved

Table 17-3. PACNT Field Descriptions (continued)

Bits	Name	Description (continued)
17–16	PACNT8	Configure pin J2 00 PA8 01 FSC0/FSR0 1*x* Reserved
15–14	PACNT7	Configure pin P1 00 PA7 01 QSPI_CS3 10 DOUT3 11 Reserved
13–12	PACNT6	Configure pin E1 00 PA6 01 USB_RxD 1*x* Reserved
11–10	PACNT5	Configure pin E2 00 PA5 01 USB_TxEN 1*x* Reserved
9–8	PACNT4	Configure pin E3 00 PA4 01 USB_Susp 1*x* Reserved
7–6	PACNT3	Configure pin E4 00 PA3 01 USB_TN 1*x* Reserved
5–4	PACNT2	Configure pin E5 00 PA2 01 USB_RN 1*x* Reserved
3–2	PACNT1	Configure pin D1 00 PA1 01 USB_RP 1*x* Reserved
1–0	PACNT0	Configure pin D2 00 PA0 01 USB_TP 1*x* Reserved

$\overline{\text{INT6}}$ is always available on pin M3. It can be enabled by programming the appropriate bits in interrupt control register 4, see Section 7.2.2.4, “Interrupt Control Register 4 (ICR4), and the programmable interrupt transition register described in Section 7.2.4, “Programmable Interrupt Transition Register (PITR).

Table 17-4. Port A Control Register Function Bits

Pin Number	PACNT[*xx*] = 00 (Function 0b00)	PACNT[*xx*] = 01 (Function 0b01)	PACNT[*xx*] = 10 (Function 0b10)	PACNT[*xx*] = 11 (Function 0b11)
D2	PA0	USB_TP	—	—
D1	PA1	USB_RP	—	—
E5	PA2	USB_RN	—	—
E4	PA3	USB_TN	—	—
E3	PA4	USB_Susp	—	—
E2	PA5	USB_TxEN	—	—
E1	PA6	USB_RxD	—	—
P1	PA7	QSPI_CS3	DOUT3	—
J2	PA8	FSC0/FSR0	—	—
J3	PA9	DGNT0	—	—
K5	PA10	DREQ0	—	—
L1	PA11	Reserved	QSPI_CS1	—
L2	PA12	DFSC2	—	—
L3	PA13	DFSC3	—	—
M2	PA14	DREQ1	—	—
M3	PA15	DGNT1[1]	—	—

[1] If this pin is programmed to function as $\overline{\text{INT6}}$, it is not available as a GPIO.

17.2.2 Port B Control Register (PBCNT)

PBCNT, shown in Figure 17-2, is used to configure the pins assigned to signals that are multiplexed with GPIO port B.

	31	30	29	28	27	26	25	24	23	22	21	20	19	18	17	16
Field	PBCNT15		PBCNT14		PBCNT13		PBCNT12		PBCNT11		PBCNT10		PBCNT9		PBCNT8	
Reset	0000_0000_0000_0000															
R/W	Read/Write															

	15	14	13	12	11	10	9	8	7	6	5	4	3	2	1	0
Field	PBCNT7		PBCNT6		PBCNT5		PBCNT4		PBCNT3		PBCNT2		PBCNT1		PBCNT0	
Reset	0000_0000_0000_0000															
R/W	Read/Write															
Addr	MBAR + 0x0088															

Figure 17-2. Port B Control Register (PBCNT)

Table 17-5 describes PBCNT fields. Table 17-6 provides the same information organized by function.

Table 17-5. PBCNT Field Descriptions

Bits	Name	Description
31–30	PBCNT15	Configure pin P10 00 PB15 01 E_MDC 1*x* Reserved
29–28	PBCNT14	Configure pin L9 00 PB14 01 E_RxER 1*x* Reserved
27–26	PBCNT13	Configure pin M9 00 PB13 01 E_RxD1 1*x* Reserved
25–24	PBCNT12	Configure pin N9 00 PB12 01 E_RxD2 1*x* Reserved
23–22	PBCNT11	Configure pin P9 00 PB11 01 E_RxD3 10 Reserved 11 Reserved
21–20	PBCNT10	Configure pin L8 00 PB10 01 E_TxD1 1*x* Reserved
19–18	PBCNT9	Configure pin M8 00 PB9 01 E_TxD2 1*x* Reserved
17–16	PBCNT8	Configure pin N8 00 PB8 01 E_TxD3 1*x* Reserved
15–14	PBCNT7	Configure pin M6 00 PB7 01 TOUT0 1*x* Reserved
13–12	PBCNT6	Configure pin G4 00 PB6 01 Reserved 1*x* Reserved
11–10	PBCNT5	Configure pin F3 00 PB5 01 $\overline{\text{TA}}$ 1*x* Reserved

Table 17-5. PBCNT Field Descriptions (continued)

Bits	Name	Description (continued)
9–8	PBCNT4	Configure pin G3 00 PB4 01 URT0_CLK 1*x* Reserved
7–6	PBCNT3	Configure pin H3 00 PB3 01 $\overline{\text{URT0_RTS}}$ 1*x* Reserved
5–4	PBCNT2	Configure pin H2 00 PB2 01 $\overline{\text{URT0_CTS}}$ 1*x* Reserved
3–2	PBCNT1	Configure pin H1. The signal URT0_RxD is always internally connected to TIN2. 00 PB1 01 URT0_RxD/TIN2 1*x* Reserved
1–0	PBCNT0	Configure pin H4 00 PB0 01 URT0_TxD 1*x* Reserved

Table 17-6 provides the same information as Table 17-6, but organized by function instead of register field.

Table 17-6. Port B Control Register Function Bits

Pin Number	PBCNTxx = 00 (Function 0b00)	PBCNTxx = 01 (Function 0b01)	PBCNTxx = 10 (Function 0b10)	PBCNTxx = 11 (Function 0b11)
H4	PB0	URT0_TxD	—	—
H1	PB1	URT0_RxD/TIN2	—	—
H2	PB2	$\overline{\text{URT0_CTS}}$	—	—
H3	PB3	$\overline{\text{URT0_RTS}}$	—	—
G3	PB4	URT0_CLK	—	—
F3	PB5	TA	—	—
G4	PB6	—	—	—
M6	PB7	TOUT0	—	—
N8	PB8	E_TxD3	—	—
M8	PB9	E_TxD2	—	—
L8	PB10	E_TxD1	—	—
P9	PB11	E_RxD3	—	—
N9	PB12	E_RxD2	—	—
M9	PB13	E_RxD1	—	—
L9	PB14	E_RxER	—	—
P10	PB15	E_MDC	—	—

17.2.3 Port C Control Register

There is no port C control register. Port C is enabled only when the external data bus is 16 bits wide. This is done by holding QSPI_DOUT/WSEL high during reset. When QSPI_DOUT/WSEL is low during reset, the external data bus is 32 bits wide and port C is unavailable.

17.2.4 Port D Control Register (PDCNT)

PDCNT, shown in Table 17-8, is used to configure pins that have multiple functions but no associated GPIO capability. Port D has no data register nor data direction register.

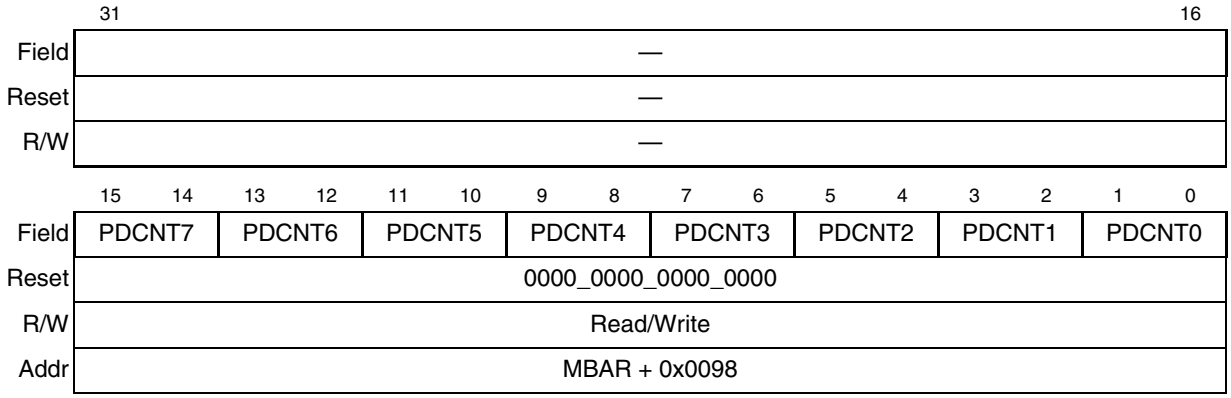

Figure 17-3. Port D Control Register (PDCNT)

Table 17-7 describes PDCNT fields. Table 17-8 provides the same information organized by function.

Table 17-7. PDCNT Field Descriptions

Bits	Name	Description
31–16	—	Reserved
15–14	PDCNT7	Configure pin K6. 00 High impedance 01 PWM_OUT2 10 TIN1 11 Reserved
13–12	PDCNT6	Configure pin P5. 00 High impedance 01 PWM_OUT1 10 TOUT1 11 Reserved
11–10	PDCNT5	Configure pin P2. 00 High impedance 01 Reserved 10 DIN3 11 $\overline{\text{INT4}}$
9–8	PDCNT4	Configure pin K1. 00 High impedance 01 DOUT0 10 URT1_TxD 11 Reserved

Table 17-7. PDCNT Field Descriptions (continued)

Bits	Name	Description (continued)
7–6	PDCNT3	Configure pin K3. 00 High impedance 01 Reserved 10 $\overline{\text{URT1_RTS}}$ 11 $\overline{\text{INT5}}$
5–4	PDCNT2	Configure pin K2. 00 High impedance 01 Reserved 10 $\overline{\text{URT1_CTS}}$ 11 QSPI_CS2
3–2	PDCNT1	Configure pin K1. The signal URT1_RxD is always internally connected to TIN3. 00 High impedance 01 DIN0 10 URT1_RxD/TIN3 11 Reserved
1–0	PDCNT0	Configure pin J4. 00 High impedance 01 DCL0 10 URT1_CLK 11 Reserved

Table 17-8 provides the same information as Table 17-7 but organized by function instead of register field.

Table 17-8. Port D Control Register Function Bits

PIN Number	PDCNTxx = 00 (Function 0b00)	PDCNTxx = 01 (Function 0b01)	PDCNTxx = 10 (Function 0b10)	PDCNTxx = 11 (Function 0b11)
J4	Pin is high Z	DCL0	URT1_CLK	—
K1	Pin is high Z	DIN0	URT1_RxD[1]/TIN3	—
K2	Pin is high Z	—	$\overline{\text{URT1_CTS}}$	QSPI_CS2
K3	Pin is high Z	—	$\overline{\text{URT1_RTS}}$	INT5
K4	Pin is high Z	DOUT0	URT1_TxD	—
P2	Pin is high Z	—	DIN3	INT4
P5	Pin is high Z	PWM_OUT1	TOUT1	—
K6	Pin is high Z	PWM_OUT2	TIN0	—
8-15	—	—	—	—

[1] URT1_RxD is always internally connected to timer 3 (TIN3).

17.3 Data Direction Registers

These registers are used to program GPIO port signals as inputs or outputs. The data direction bit for any line is ignored unless that line is configured for general purpose I/O in the appropriate control register. If a GPIO line changes from an input to an output, the initial data on that pin is the last data written to the latch by the corresponding data register.

At system reset, these register bits are all cleared, configuring all port I/O lines as general purpose inputs. Bootstrap software must write an appropriate value into the data direction register to configure GPIO port signals as outputs. When these registers are first written, any internal pullups on the corresponding I/O pins are disabled.

A detailed description is provided only for data direction register A (PADDR). The control bits in all three registers operate in the same manner.

17.3.1 Port A Data Direction Register (PADDR)

The PADDR determines the signal direction of each parallel port pin programmed as a GPIO port in the PACNT.

	15	0
Field	PADDR	
Reset	0000_0000_0000_0000	
R/W	Read/Write	
Addr	MBAR + 0x0084	

Figure 17-4. Port A Data Direction Register (PADDR)

Table 17-9. PADDR Field Descriptions

Bits	Name	Description
15–0	PADDR	Data direction bits. Each data direction bit selects the direction of the signal as follows: 0 Signal is defined as an input. 1 Signal is defined as an output.

17.3.2 Port B Data Direction Register (PBDDR)

The PBDDR determines the signal direction of each parallel port pin programmed as a GPIO port in the PBCNT.

	15	0
Field	PBDDR	
Reset	0000_0000_0000_0000	
R/W	Read/Write	
Addr	MBAR + 0x008C	

Figure 17-5. Port B Data Direction Register (PBDDR)

17.3.3 Port C Data Direction Register (PCDDR)

The PCDDR determines the signal direction of each parallel port pin programmed as a GPIO port in the PCCNT.

	15	0
Field	PCDDR	
Reset	0000_0000_0000_0000	
R/W	Read/Write	
Addr	MBAR + 0x0094	

Figure 17-6. Port C Data Direction Register (PCDDR)

17.4 Port Data Registers

These 16-bit bidirectional registers are used to read or write the logic states of the GPIO lines. This register has no effect on pins not configured for general-purpose I/O.

After a system reset, these register bits are all cleared. When any port lines are configured as outputs, a logic zero appears on those pins, unless the data register is written with an initial data value prior to setting the pin direction.

The reset values given in the following register diagrams are the port output values written to the registers during reset, and do not reflect the value of a register read cycle. Register reads always return the instantaneous value of the corresponding pins.

17.4.1 Port Data Register (P*x*DAT)

In the following description P*x*DAT refers to PADAT, PBDAT, or PCDAT.

The P*x*DAT value for inputs corresponds to the logic level at the pin; for outputs, the value corresponds to the logic level driven onto the pin. Note that P*x*DAT has no effect on pins which have not been configured for GPIO.

	15	0
Field	P*x*DAT	
Reset	Undefined	
R/W	Read/Write	
Addr	MBAR + 0x0086 (PADAT); 0x008E (PBDAT); 0x0096 (PCDAT)	

Figure 17-7. Port *x* Data Register (PADAT, PBDAT, and PCDAT)

Chapter 18
Pulse-Width Modulation (PWM) Module

This chapter describes the configuration and operation of the pulse-width modulation (PWM) module. It includes a block diagram, programming model, and timing diagram.

18.1 Overview

The PWM module shown in Figure 18-1, generates a synchronous series of pulses having programmable duty cycle. With a suitable low-pass filter, the PWM can be used as a digital-to-analog converter.

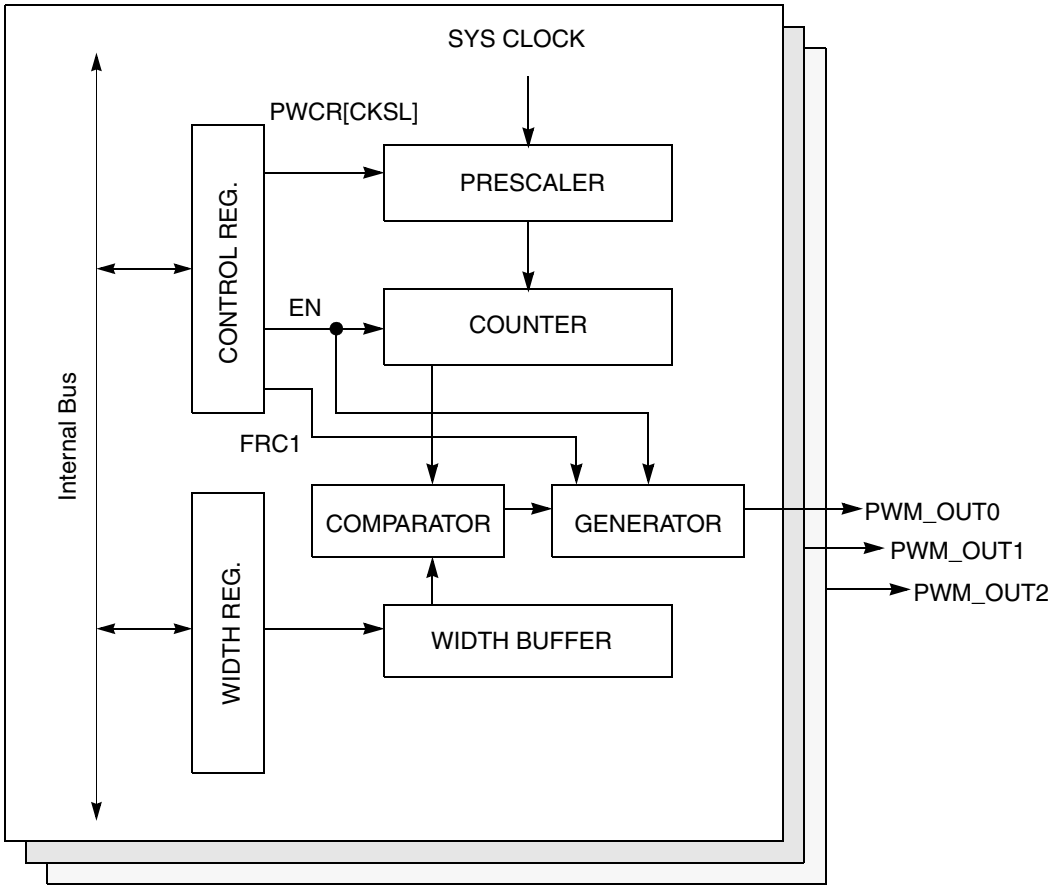

Figure 18-1. PWM Block Diagram (3 Identical Modules)

Summary of the main features include:

- Double-buffered width register
- Variable-divide prescale
- Three independent PWM modules
- Byte-wide width register provides programmable duty cycle control

18.2 PWM Operation

The PWM is a simple free-running counter combined with a pulse-width register and a comparator such that the output is cleared whenever the counter value exceeds the width register value. When the counter overflows, or “wraps around,” its value becomes less than or equal to the value of the width register, and the output is set. With a suitable low-pass filter, the PWM can be used as a digital-to-analog converter.

The width register is double-buffered so that a new value can be loaded for the next cycle without affecting the current cycle. At the beginning of each period, the value of the width buffer register is loaded into the width register, which feeds the comparator. This value is used for comparison during the next cycle. The prescaler contains a variable divider that can reduce the incoming clock frequency by certain values between 1 and 32768.

18.3 PWM Programming Model

This section describes the registers and control bits in the PWM module. There are three independent PWM modules, each with its own control and width registers. The memory map for the PWM is shown in Table 18-1.

Table 18-1. PWM Module Memory Map

MBAR Offset	[31:24]	[23:16]	[15:8]	[7:0]
0x00C0	PWM Control Register 0 (PWCR0)	Reserved		
0x00C4	PWM Control Register 1 (PWCR1)	Reserved		
0x00C8	PWM Control Register 2 (PWCR2)	Reserved		
0x00D0	PWM Pulse-Width Register 0 (PWWD0)	Reserved		
0x00D4	PWM Pulse-Width Register 1 (PWWD1)	Reserved		
0x00D8	PWM Pulse-Width Register 2 (PWWD2)	Reserved		

18.3.1 PWM Control Register (PWCR*n*)

This register, shown in Figure 18-2, controls the overall operation of the PWM. Unless disabled and then re-enabled, writing to PWCR while the PWM is running will not alter its operation until the current output cycle finishes. For example, if the prescale value is changed while the PWM is enabled, the new value will not take effect until after the counter has “wrapped around”. The PWM must be disabled and then re-enabled to affect its operation before the end of the current output cycle.

	7	6	5	4	3 … 0
Field	EN	FRC1	LVL	—	CKSEL
Reset	0010_0000				
R/W	Read/Write				
Address	MBAR + 0x0C0 (PWCR0); + 0x0C4 (PWCR1); + 0x0C8 (PWCR2)				

Figure 18-2. PWM Control Registers (PWCR*n*)

Table 18-2 gives PWCR field descriptions.

Table 18-2. PWCR*n* Field Descriptions

Bits	Name	Description
7	EN	Enable. 0 Disables the PWM. While disabled, the PWM is in low-power mode and the prescaler does not count. When the PWM is disabled, the output is forced to the value of PWCR*n*[LVL]. 1 Enables the PWM.
6	FRC1	Force output high. 0 Default reset value. PWM functions normally. 1 The PWM drives the output high for the entire counter period. PWCR*n*[FRC1] has a lower priority than PWCR*n*[EN], so setting PWCR*n*[FRC1] while PWCR*n*[EN] is cleared has no effect. There are two ways to drive the PWM output high. If PWCR*n*[EN] is cleared, PWM output immediately assumes the value of PWCR*n*[LVL]. If PWCR*n*[FRC1] is set while PWCR*n*[EN] is set, the PWM output does not go high until after the current output cycle completes.
5	LVL	Disable level. Determines the PWM output level whenever the PWM is disabled. 0 The PWM output is low while disabled. 1 The PWM output is high while disabled.
4	—	Reserved, should be cleared.
3–0	CKSL	Prescale clock. These bits select the clock frequency divider, that is, the output of the divider chain, as shown below. CKSL[3:0] Divisor 0000 1 0001 2 0010 4 111132768

18.3.2 PWM Width Register (PWWD*n*)

This register, shown in Figure 18-3, controls the width of the output pulse. When the counter become greater than or equal to the value in this register, the output is cleared for the remainder of the period. When the counter overflows, or wraps around, the counter value becomes less than or equal to the value of the width register and the output is set high.

Writing to the width register while the PWM is enabled will not alter the operation of the PWM until the end of the current output cycle. That is, the width value is not modified until after the counter has wrapped around. The PWM must be disabled and then re-enabled to affect its operation before the end of the current output cycle.

	7	0
Field	PW	
Reset	0000_0000	
R/W	R/W	
Address	MBAR + 0x0D0 (PWWD0); + 0x0D4 (PWWD1); + 0x0D8 (PWWD2)	

Figure 18-3. PWM Width Register (PWWD*n*)

Table 18-3. PWWD*n* Field Descriptions

Bits	Name	Description
7–0	PW	Pulse width. Range 0x00–0xFF. When the counter value become greater than PWWD[PW], the output is cleared for the remainder of the period. When the counter overflows, or wraps around, the counter value becomes less than or equal to PWWD[PW] and the output is set.

Figure 18-4 shows example PWM waveforms and their dependence on PWWD[PW].

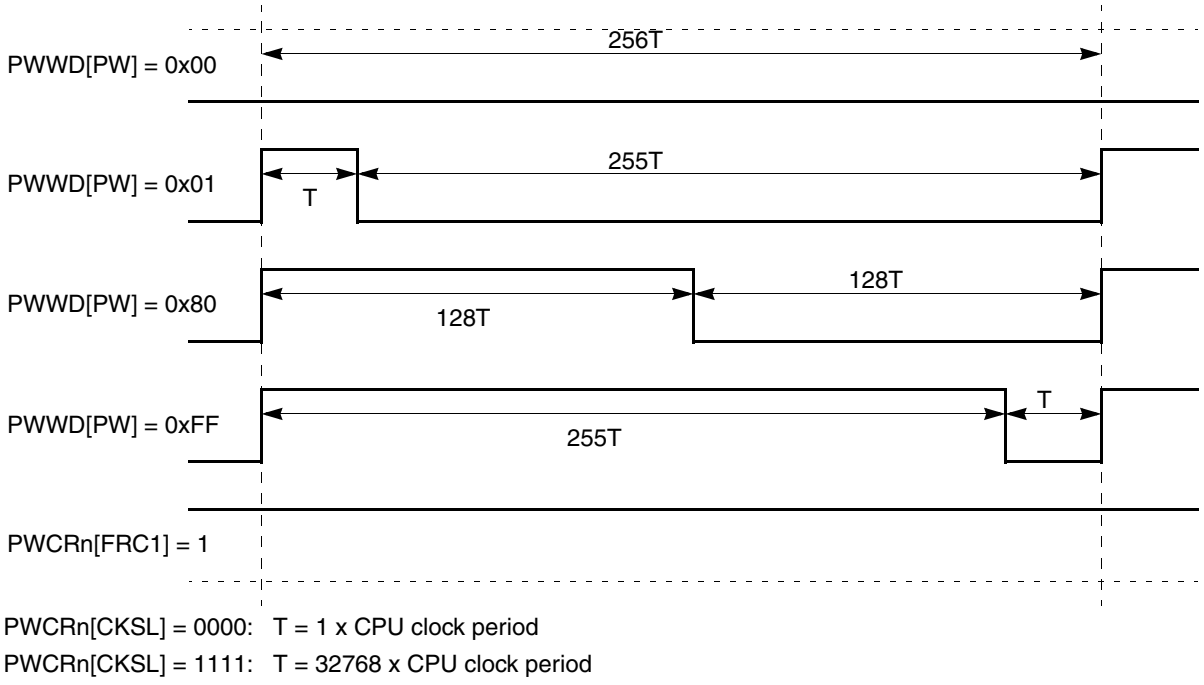

Figure 18-4. PWM Waveform Examples (PWCR*n*[EN] = 1)

Chapter 19
Signal Descriptions

This chapter provides a listing and brief description of all the MCF5272 signals. It shows it shows which are inputs or outputs, how they are multiplexed, and the state of each signal at reset. The first listing is organized by function with signals appearing alphabetically within each functional group. This is followed by a second listing sorted by pin number. Some pins serve as many as four different functions.

19.1 MCF5272 Block Diagram with Signal Interfaces

Figure 19-1 shows the MCF5272 block diagram and how the modules and signals interact. Refer also to Table 19-1 and Table 19-2 for a list of the signals sorted by function and pin number, respectively.

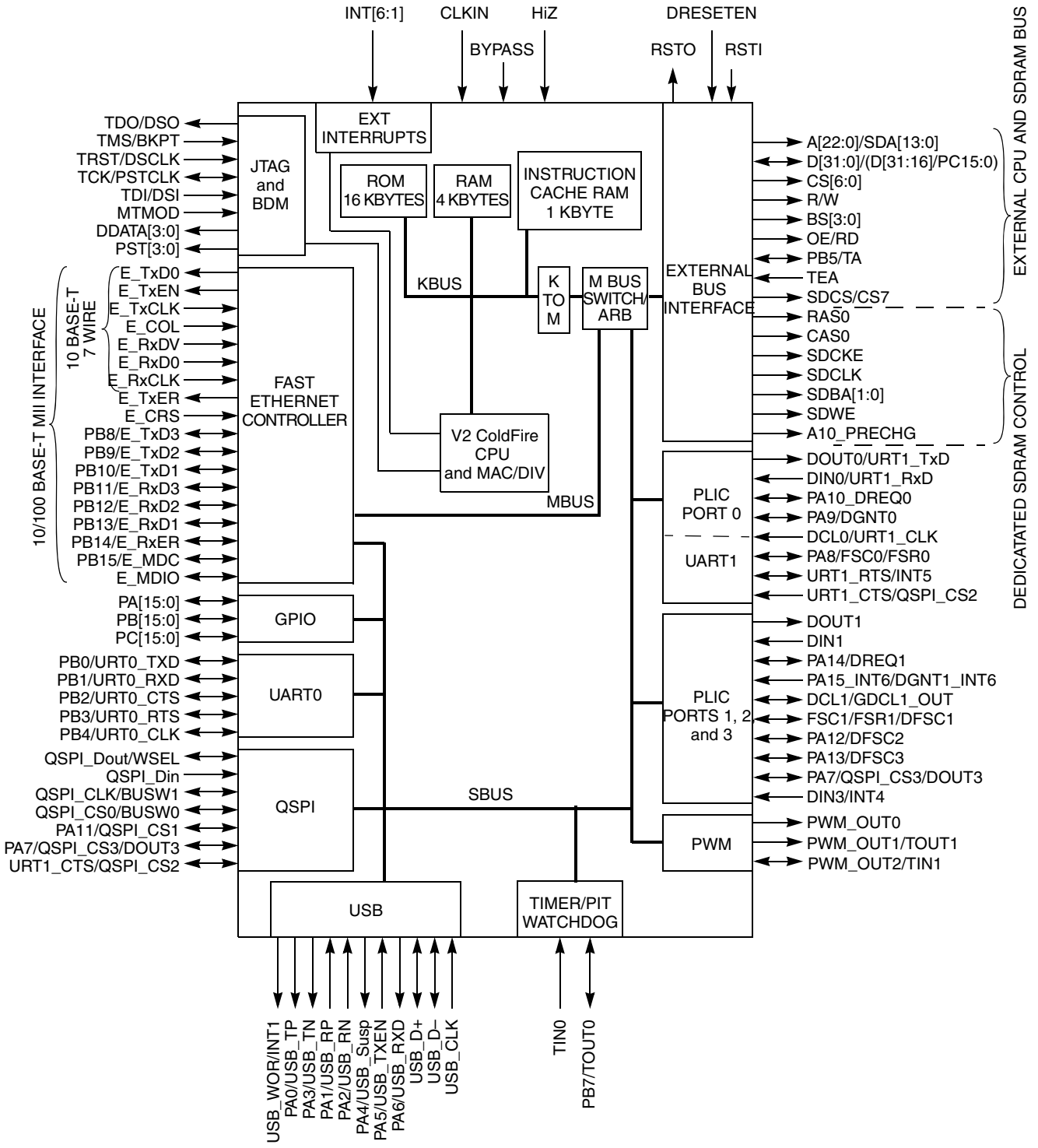

NOTE: GPIO pins shown above are multiplexed with most other signals.

Figure 19-1. MCF5272 Block Diagram with Signal Interfaces

19.2 Signal List

Table 19-1 summarizes the signals, showing default pin functions after system reset. General-purpose port signals all default to inputs after reset. Table 19-2 presents the same information sorted by pin number instead of signal function.

NOTE:

In this manual, the term ‘asserted’ indicates the active signal state; ‘negated’ indicates inactive. Names of active-low signals are given overbars, for example, $\overline{\text{INT1}}$ and $\overline{\text{SDWE}}$.

Table 19-1. Signal Descriptions Sorted by Function (Sheet 1 of 8)

Configured by (see notes)[1]	Pin Functions				Description	Map BGA Pin	I/O	Drive (mA)	Cpf
	0 (Reset)	1	2	3					
	A0	—	—	—	A0	D10	O	6	30
	A1	SDA0	—	—	A1/SDRAM-16bit A0	B12	O	6	30
	A10	SDA9	SDA8	—	A10/SDRAM-16bit A9/SDRAM-32bit A8	D12	O	6	30
	A10_PRECHG	—	—	—	SDRAM A10_Precharge	D14	O	10	30
	A11	—	SDA9	—	A11/SDRAM-32bit A9	C11	O	6	30
	A12	SDA11	–	—	A12/SDRAM-16bit A11	B11	O	6	30
	A13	SDA12	SDA11	—	A13/SDRAM-16bit A12/SDRAM-32bit A11	A11	O	6	30
	A14	SDA13	SDA12	—	A14/SDRAM-16bit A13/SDRAM-32bit A12	C10	O	6	30
	A15	—	—	—	A15	D9	O	6	30
	A16	—	—	—	A16	D8	O	6	30
	A17	—	—	—	A17	D7	O	6	30
	A18	—	—	—	A18	C6	O	6	30
	A19	—	—	—	A19	D6	O	6	30
	A2	SDA1	SDA0	—	A2/SDRAM-16bit A1/SDRAM-32bit A0	A12	O	6	30
	A20	—	—	—	A20	B5	O	6	30
	A21	—	—	—	A21	C5	O	6	30
	A22	—	—	—	A22	E9	O	6	30
	A3	SDA2	SDA1	—	A3/SDRAM-16bit A2/SDRAM-32bit A1	A13	O	6	30
	A4	SDA3	SDA2	—	A4/SDRAM-16bit A3/SDRAM-32bit A2	A14	O	6	30
	A5	SDA4	SDA3	—	A5/SDRAM-16bit A4/SDRAM-32bit A3	B13	O	6	30

Table 19-1. Signal Descriptions Sorted by Function (Sheet 2 of 8)

Configured by (see notes)[1]	Pin Functions				Description	Map BGA Pin	I/O	Drive (mA)	Cpf
	0 (Reset)	1	2	3					
	A6	SDA5	SDA4	—	A6/SDRAM-16bit A5/SDRAM-32bit A4	B14	O	6	30
	A7	SDA6	SDA5	—	A7/SDRAM-16bit A6/SDRAM-32bit A5	C12	O	6	30
	A8	SDA7	SDA6	—	A8/SDRAM-16bit A7/SDRAM-32bit A6	C13	O	6	30
	A9	SDA8	SDA7	—	A9/SDRAM-16bit A8/SDRAM-32bit A7	C14	O	6	30
	BS0	—	—	—	Byte strobe 0	A9	O	6	30
	BS1	—	—	—	Byte strobe 1	C8	O	6	30
	BS2	—	—	—	Byte strobe 2	E12	O	6	30
	BS3	—	—	—	Byte strobe 3	E13	O	6	30
	CAS0	—	—	—	SDRAM column select strobe	C9	O	10	30
	CLKIN	—	—	—	CPU external clock input	M14	I		
BUSW[1:0][2]	$\overline{CS0}$/Boot	—	—	—	Chip select 0	K9	O	6	30
	CS1	—	—	—	Chip select 1	K10	O	6	30
	CS2	—	—	—	Chip select 2	P11	O	6	30
	CS3	—	—	—	Chip select 3	N11	O	6	30
	CS4	—	—	—	Chip select 4	M11	O	6	30
	CS5	—	—	—	Chip select 5	L11	O	6	30
	CS6	—	—	—	Chip select 6	P12	O	6	30
WSEL pin[2]	D0	PC0	—	—	D0/port C bit 0	L12	I/O	6	30
WSEL pin[2]	D1	PC1	—	—	D1/port C bit 1	L13	I/O	6	30
WSEL pin[2]	D10	PC10	—	—	D10/port C bit 10	H11	I/O	6	30
WSEL pin[2]	D11	PC11	—	—	D11/port C bit 11	G11	I/O	6	30
WSEL pin[2]	D12	PC12	—	—	D12/port C bit 12	F11	I/O	6	30
WSEL pin[2]	D13	PC13	—	—	D13/port C bit 13	E11	I/O	6	30
WSEL pin[2]	D14	PC14	—	—	D14/port C bit 14	D11	I/O	6	30
WSEL pin[2]	D15	PC15	—	—	D15/port C bit 15	E10	I/O	6	30
WSEL pin[2]	D16	D0	—	—	D16/D0	A5	I/O	6	30
WSEL pin[2]	D17	D1	—	—	D17/D1	B6	I/O	6	30
WSEL pin[2]	D18	D2	—	—	D18/D2	A6	I/O	6	30
WSEL pin[2]	D19	D3	—	—	D19/D3	C7	I/O	6	30
WSEL pin[2]	D2	PC2	—	—	D2/port C bit 2	L14	I/O	6	30

Table 19-1. Signal Descriptions Sorted by Function (Sheet 3 of 8)

Configured by (see notes)[1]	Pin Functions				Description	Map BGA Pin	I/O	Drive (mA)	Cpf
	0 (Reset)	1	2	3					
WSEL pin[2]	D20	D4	—	—	D20/D4	B7	I/O	6	30
WSEL pin[2]	D21	D5	—	—	D21/D5	A7	I/O	6	30
WSEL pin[2]	D22	D6	—	—	D22/D6	A8	I/O	6	30
WSEL pin[2]	D23	D7	—	—	D23/D7	B8	I/O	6	30
WSEL pin[2]	D24	D8	—	—	D24/D8	F12	I/O	6	30
WSEL pin[2]	D25	D9	—	—	D25/D9	F13	I/O	6	30
WSEL pin[2]	D26	D10	—	—	D26/D10	F14	I/O	6	30
WSEL pin[2]	D27	D11	—	—	D27/D11	G12	I/O	6	30
WSEL pin[2]	D28	D12	—	—	D28/D12	G13	I/O	6	30
WSEL pin[2]	D29	D13	—	—	D29/D13	G14	I/O	6	30
WSEL pin[2]	D3	PC3	—	—	D3/port C bit 3	K11	I/O	6	30
WSEL pin[2]	D30	D14	—	—	D30/D14	H14	I/O	6	30
WSEL pin[2]	D31	D15	—	—	D31/D15	H13	I/O	6	30
WSEL pin[2]	D4	PC4	—	—	D4/port C bit 4	K12	I/O	6	30
WSEL pin[2]	D5	PC5	—	—	D5/port C bit 5	K13	I/O	6	30
WSEL pin[2]	D6	PC6	—	—	D6/port C bit 6	K14	I/O	6	30
WSEL pin[2]	D7	PC7	—	—	D7/port C bit 7	J11	I/O	6	30
WSEL pin[2]	D8	PC8	—	—	D8/port C bit 8	J12	I/O	6	30
WSEL pin[2]	D9	PC9	—	—	D9/port C bit 9	J13	I/O	6	30
	HIZ	—	—	—	High impedance enable	N14	I		30
	DCL1/ GDCL1_OUT	—	—	—	PLIC ports 1, 2, 3 data clock/Generated DCL out	M1	I/O	4	30
	DDATA0	—	—	—	Debug data 0	C3	O	4	30
	DDATA1	—	—	—	Debug data 1	A2	O	4	30
	DDATA2	—	—	—	Debug data 2	B2	O	4	30
	DDATA3	—	—	—	Debug data 3	A1	O	4	30
	DIN1	—	—	—	PLIC ports 1, 2, 3 data input	N2	I		
	DOUT1	—	—	—	PLIC ports 1, 2, 3 data output	N1	O	2	30
	DRESETEN	—	—	—	DRAM controller reset enable	N12	I		
	E_COL	—	—	—	Collision	P6	I		
	E_CRS	—	—	—	Carrier sense (100 base-T Ethernet only)	L10	I		

Table 19-1. Signal Descriptions Sorted by Function (Sheet 4 of 8)

Configured by (see notes)[1]	Pin Functions				Description	Map BGA Pin	I/O	Drive (mA)	Cpf
	0 (Reset)	1	2	3					
	E_MDIO	—	—	—	Management channel serial data (100 base-T only)	N10	I/O	2	
	E_RxCLK	—	—	—	Ethernet Rx clock	N7	I		
	E_RxD0	—	—	—	Ethernet Rx data	P7	I		
	E_RxDV	—	—	—	Ethernet Rx data valid	M7	I		
	E_Tx CLK	—	—	—	Ethernet Tx clock	L7	I		
	E_TxD0	—	—	—	Ethernet Tx data	N6	O	4	30
	E_TxEN	—	—	—	Ethernet Tx enable	P8	O	2	30
	E_TxER	—	—	—	Transmit error (100 base-T Ethernet only)	M10	O	2	30
	FSC1/FSR1/ DFSC1	—	—	—	PLIC port 1 IDL FSR/GCI FSC1/Generated frame sync 1 Out	L4	I/O	2	30
	GND	Ground	—	—		E[7,8] F[7,8] G[6–9] H[6–9] J[7,8]			
Port D Cntl Reg[3]	High Z	DCL0	URT1_CLK	—	Port 0 data clock/UART1 baud clock	J4	I		
Port D Cntl Reg[3]	High Z	DIN0	URT1_RxD	—	IDL/GCI data in/UART1 Rx data	K1	I		
Port D Cntl Reg[3]	High Z	–	$\overline{\text{URT1_CTS}}$	QSPI_ CS2	UART1 CTS/QSPI_CS2	K2	I/O	2	30
Port D Cntl Reg[3]	High Z	–	URT1_RTS	INT5	UART1 RTS/$\overline{\text{INT5}}$	K3	I/O	2	30
Port D Cntl Reg[3]	High Z	DOUT0	URT1_TxD	—	IDL-GCI data Out/UART1 Tx data	K4	O	2	30
Port D Cntl Reg[3]	High Z	–	DIN3	INT4	Interrupt 4 input/PLIC port 3 data input	P2	I		
Port D Cntl Reg[3]	High Z	PWM_ OUT1	TOUT1	—	PWM output compare 1 /Timer 1 output compare	P5	O	4	30
Port D Cntl Reg[3]	High Z	PWM_ OUT2	TIN1	—	PWM output compare 2 /Timer 1 input	K6	I/O	4	30
	$\overline{\text{INT1}}$/ USB_WOR	—	—	—	Interrupt input 1/USB wake-on-ring	M4	I		
	INT2	—	—	—	Interrupt input 1	P3	I		
	INT3	—	—	—	Interrupt input 3	N3	I		

Table 19-1. Signal Descriptions Sorted by Function (Sheet 5 of 8)

Configured by (see notes)[1]	Pin Functions				Description	Map BGA Pin	I/O	Drive (mA)	Cpf
	0 (Reset)	1	2	3					
	MTMOD	—	—	—	0 selects JTAG mode, 1 selects BDM mode	B3	I		
	$\overline{OE}$/RD	—	—	—	Output enable/Read	P13	O	4	30
Port A Cntl Reg[3]	PA0	USB_TP	—	—	Port A bit 0/ USB Tx positive	D2	I/O	2	30
Port A Cntl Reg[3]	PA1	USB_RP	—	—	Port A bit 1/ USB Rx positive	D1	I/O	2	30
Port A Cntl Reg[3]	PA10	DREQ0	—	—	Port A bit 10/IDL DREQ0	K5	I/O	2	30
Port A Cntl Reg[3]	PA11	—	QSPI_CS1	—	Port A bit 11/QSPI chip select 1	L1	I/O	2	30
Port A Cntl Reg[3]	PA12	DFSC2	—	—	Port A bit 12/Delayed frame sync 2	L2	I/O	2	30
Port A Cntl Reg[3]	PA13	DFSC3	—	—	Port A bit 13/Delayed frame sync 3	L3	I/O	2	30
Port A Cntl Reg[3]	PA14	DREQ1	—	—	Port A bit 14/PLIC port 1 IDL D-channel request	M2	I/O	4	30
Port A Cntl Reg[3]	PA15_INT6	DGNT1_INT6	—	—	Port A bit 15/PLIC port 1 D-channel grant/Interrupt 6 input	M3	I/O	2	30
Port A Cntl Reg[3]	PA2	USB_RN	—	—	Port A bit 2/ USB Rx negative	E5	I/O	2	30
Port A Cntl Reg[3]	PA3	USB_TN	—	—	Port A bit 3/ USB Tx negative	E4	I/O	2	30
Port A Cntl Reg[3]	PA4	USB_ Susp	—	—	Port A bit 4/ Suspend USB driver	E3	I/O	2	30
Port A Cntl Reg[3]	PA5	USB_TxEN	—	—	Port A bit 5/USB transmitter enable	E2	I/O	2	30
Port A Cntl Reg[3]	PA6	USB_RxD	—	—	Port A bit 6/USB receive data output	E1	I/O	2	30
Port A Cntl Reg[3]	PA7	QSPI_CS3	DOUT3	—	PA7/QSPI chip select 4/PLIC port 3 data output	P1	I/O	2	30
Port A Cntl Reg[3]	PA8	FSC0/ FSR0	—	—	Port A bit 8/IDL FSR0 & GCI FSC0	J2	I/O	2	30
Port A Cntl Reg[3]	PA9	DGNT0	—	—	Port A bit 9//IDL DGNT0	J3	I/O	2	30
Port B Cntl Reg[3]	PB0	URT0_TxD	—	—	Port B bit 0/UART0 Tx data	H4	I/O	4	30
Port B Cntl Reg[3]	PB1	URT0_RxD	—	—	Port B bit 1/UART0 Rx data	H1	I/O	2	30

Table 19-1. Signal Descriptions Sorted by Function (Sheet 6 of 8)

Configured by (see notes)[1]	Pin Functions				Description	Map BGA Pin	I/O	Drive (mA)	Cpf
	0 (Reset)	1	2	3					
Port B Cntl Reg[3]	PB10	E_TxD1	—	—	Port B bit 10/Tx data bit 1 (100 Base-T Ethernet only)	L8	I/O	4	30
Port B Cntl Reg[3]	PB11	E_RxD3	—	—	Port B bit 11/Rx data bit 3 (100 Base-T Ethernet only)	P9	I/O	2	30
Port B Cntl Reg[3]	PB12	E_RxD2	—	—	Port B bit 12/Rx data bit 2 (100 Base-T Ethernet only)	N9	I/O	2	30
Port B Cntl Reg[3]	PB13	E_RxD1	—	—	Port B bit 13/Rx data bit 1 (100 Base-T Ethernet only)	M9	I/O	2	30
Port B Cntl Reg[3]	PB14	E_RxER	—	—	Port B bit 14/Receive Error (100 Base-T Ethernet only)	L9	I/O	2	30
Port B Cntl Reg[3]	PB15	E_MDC	—	—	Port B bit 15/ Management Channel Clock (100 Base-T only)	P10	I/O	2	30
Port B Cntl Reg[3]	PB2	URT0_ CTS	—	—	Port B bit 2/UART0 CTS	H2	I/O	2	30
Port B Cntl Reg[3]	PB3	URT0_ RTS	—	—	Port B bit 3/UART0 RTS	H3	I/O	4	30
Port B Cntl Reg[3]	PB4	URT0_CLK	—	—	Port B bit 4/UART0 baud clock	G3	I/O	2	30
Port B Cntl Reg[3]	PB5	TA	—	—	Port B bit 5/Transfer acknowledge	F3	I/O	2	
Port B Cntl Reg[3]	PB6	—	—	—	Port B bit 6	G4	I/O	2	30
Port B Cntl Reg[3]	PB7	TOUT0	—	—	Port B bit 7/Timer 0 output compare	M6	I/O	4	30
Port B Cntl Reg[3]	PB8	E_TxD3	—	—	Port B bit 8/Tx data bit 3 (100 Base-T Ethernet only)	N8	I/O	4	30
Port B Cntl Reg[3]	PB9	E_TxD2	—	—	Port B bit 9/Tx data bit 2 (100 Base-T Ethernet only)	M8	I/O	4	30
	PST0	—	—	—	Internal processor status 0	B1	O	4	30
	PST1	—	—	—	Internal processor status 1	C2	O	4	30
	PST2	—	—	—	Internal processor status 2	C1	O	4	30

Table 19-1. Signal Descriptions Sorted by Function (Sheet 7 of 8)

Configured by (see notes)[1]	Pin Functions				Description	Map BGA Pin	I/O	Drive (mA)	Cpf
	0 (Reset)	1	2	3					
	PST3	—	—	—	Internal processor status 3	D3	O	4	30
	PWM_OUT0	—	—	—	PWM output compare 0	N5	O	4	30
	QSPI_CLK/ BUSW1	—	—	—	QSPI serial clock/CS0 bus width bit 1	L5	O	4	30
	QSPI_CS0/ BUSW0	—	—	—	QSPI peripheral chip select 0/$\overline{CS0}$ bus width bit 0	M5	O	2	30
	QSPI_Din	—	—	—	QSPI data input	P4	I		
	QSPI_Dout/ WSEL	—	—	—	QSPI data output/Bus width selection	N4	I/O	4	30
	R/$\overline{W}$	—	—	—	Read/Write	P14	O	10	30
	RAS0	—	—	—	SDRAM row select strobe	A10	O	10	30
	RSTI	—	—	—	Device reset	M12	I		
	RSTO	—	—	—	Reset output strobe	F4	O	4	30
	SDBA0	—	—	—	SDRAM bank 0 select	J14	O	10	30
	SDBA1	—	—	—	SDRAM bank 1 select	H12	O	10	30
	SDCLK	—	—	—	SDRAM (bus) clock, Same frequency as CPU clock	E14	O	10	30
	SDCLKE	—	—	—	SDRAM clock enable	D13	O	10	30
	$\overline{SDCS}$/ $\overline{CS7}$	—	—	—	SDRAM chip select/$\overline{CS7}$	B10	O	10	30
	SDWE	—	—	—	SDRAM write enable	B9	O	10	30
	BYPASS	—	—	—	Bypass internal test mode	M13	O	4	30
MTMOD[4]	TCK	PSTCLK	—	—	JTAG test clock in/ BDM PSTCLK output	C4	I/O	4	30
MTMOD[4]	TDI	DSI	—	—	JTAG test data in/BDM data in	A4	I		
MTMOD[4]	TDO	DSO	—	—	JTAG test data out /BDM data out	D5	O	4	30
	TEA	—	—	—	BDM debug transfer error acknowledge	A3	I		
	TEST	—	—	—	Device test mode enable	E6	I		
	TIN0	—	—	—	Timer 0 input	L6	I		
MTMOD[4]	TMS	BKPT	—	—	JTAG test mode/BDM select breakpoint input	B4	I		

Table 19-1. Signal Descriptions Sorted by Function (Sheet 8 of 8)

Configured by (see notes)[1]	Pin Functions				Description	Map BGA Pin	I/O	Drive (mA)	Cpf
	0 (Reset)	1	2	3					
MTMOD[4]	TRST	DSCLK	—	—	JTAG reset/BDM clock	D4	I		
	USB_CLK	—	—	—	USB external 48-MHz clock input	J1	I		
	USB_D+	—	—	—	USB line driver high, analog[5]	F1	O	–	30
	USB_D–	—	—	—	USB line driver low, analog[5]	F2	O	–	30
	USB_GND	—	—	—	USB transceiver GND	G2	I		
	USB_VDD	—	—	—	USB transceiver VDD	G1	I		
	VDD	+3.3V	—	—		F[5,6] F[9,10] G[5,10] H[5,10] J[5,6] J[9,10] K[7,8] N13			

1 No entry in this column means that after reset the pin is not reconfigurable and has only one definition.

2 WSEL, BUSW1, BUSW0, HIZ, and others, refers to function determined by pull-up or pull-down value as seen by these address pins during reset.

3 “Port x Cntl Reg” refers to pin function programmed by software writing to GPIO port configuration registers.

4 MTMOD means that pin function is determined by state of the MTMOD signal.

5 Requires external protection circuitry to meet USB 1.1 electrical requirements under all conditions (see 12.5.3, “Recommended USB Protection Circuit”).

Table 19-2 presents signal names, functions, and descriptions sorted by pin numbers.

Table 19-2. Signal Name and Description by Pin Number (Sheet 1 of 8)

Map BGA Pin	Pin Functions				Name	Description	I/O
	0 (Reset)	1	2	3			
A1	DDATA3	—	—	—	DDATA3	Debug data 3	O
A2	DDATA1	—	—	—	DDATA1	Debug data 1	O
A3	TEA	—	—	—	TEA	BDM debug transfer error acknowledge	I
A4	TDI	DSI	—	—	TDI/DSI	JTAG test data in/BDM data in	I
A5	D16	D0	—	—	D16/D0	D16/D0	I/O
A6	D18	D2	—	—	D18/D2	D18/D2	I/O
A7	D21	D5	—	—	D21/D5	D21/D5	I/O
A8	D22	D6	—	—	D22/D6	D22/D6	I/O
A9	BS0	—	—	—	BS0	Byte strobe 0	O
A10	RAS0	—	—	—	RAS0	SDRAM row select strobe	O
A11	A13	SDA12	SDA11	—	A13/SDA12/SDA11	A13/SDRAM-16bit A12/SDRAM-32bit A11	O
A12	A2	SDA1	SDA0	—	A2/SDA1/SDA0	A2/SDRAM-16bit A1/SDRAM-32bit A0	O
A13	A3	SDA2	SDA1	—	A3/SDA2/SDA1	A3/SDRAM-16bit A2/SDRAM-32bit A1	O
A14	A4	SDA3	SDA2	—	A4/SDA3/SDA2	A4/SDRAM-16bit A3/SDRAM-32bit A2	O
B1	PST0	—	—	—	PST0	Internal processor status 0	O
B2	DDATA2	—	—	—	DDATA2	Debug data 2	O
B3	MTMOD	—	—	—	MTMOD	0 selects JTAG mode, 1 selects BDM mode	I
B4	TMS	BKPT	—	—	TMS/$\overline{\text{BKPT}}$	JTAG test mode/BDM select breakpoint input	I
B5	A20	—	—	—	A20	A20	O
B6	D17	D1	—	—	D17/D1	D17/D1	I/O
B7	D20	D4	—	—	D20/D4	D20/D4	I/O
B8	D23	D7	—	—	D23/D7	D23/D7	I/O
B9	SDWE	—	—	—	SDWE	SDRAM write enable	O
B10	$\overline{\text{SDCS}}$/ $\overline{\text{CS7}}$	—	—	—	$\overline{\text{SDCS}}$ / $\overline{\text{CS7}}$	SDRAM chip select/$\overline{\text{CS7}}$	O
B11	A12	SDA11	—	—	A12/SDA11	A12/SDRAM-16bit A11	O

Table 19-2. Signal Name and Description by Pin Number (Sheet 2 of 8)

Map BGA Pin	Pin Functions				Name	Description	I/O
	0 (Reset)	1	2	3			
B12	A1	SDA0	—	—	A1/SDA0	A1/SDRAM-16bit A0	O
B13	A5	SDA4	SDA3	—	A5/SDA4/SDA3	A5/SDRAM-16bit A4/SDRAM-32bit A3	O
B14	A6	SDA5	SDA4	—	A6/SDA5/SDA4	A6/SDRAM-16bit A5/SDRAM-32bit A4	O
C1	PST2	—	—	—	PST2	Internal processor status 2	O
C2	PST1	—	—	—	PST1	Internal processor status 1	O
C3	DDATA0	—	—	—	DDATA0	Debug data 0	O
C4	TCK	PSTCLK	—	—	TCK/PSTCLK	JTAG test clock in/ BDM PSTCLK output	I/O
C5	A21	—	—	—	A21	A21	O
C6	A18	—	—	—	A18	A18	O
C7	D19	D3	—	—	D19/D3	D19/D3	I/O
C8	BS1	—	—	—	$\overline{BS1}$	Byte strobe 1	O
C9	CAS0	—	—	—	CAS0	SDRAM column select strobe	O
C10	A14	SDA13	SDA12	—	A14/SDA13/SDA12	A14/SDRAM-16bit A13/SDRAM-32bit A12	O
C11	A11	—	SDA9	—	A11/SDA9	A11/SDRAM-32bit A9	O
C12	A7	SDA6	SDA5	—	A7/SDA6/SDA5	A7/SDRAM-16bit A6/SDRAM-32bit A5	O
C13	A8	SDA7	SDA6	—	A8/SDA7/SDA6	A8/SDRAM-16bit A7/SDRAM-32bit A6	O
C14	A9	SDA8	SDA7	—	A9/SDA8/SDA7	A9/SDRAM-16bit A8/SDRAM-32bit A7	O
D1	PA1	USB_RP	—	—	PA1/USB_RP	Port A bit 1/ USB Rx positive	I/O
D2	PA0	USB_TP	—	—	PA0/USB_TP	Port A bit 0/ USB Tx positive	I/O
D3	PST3	—	—	—	PST3	Internal processor status 3	O
D4	TRST	DSCLK	—	—	$\overline{TRST}$/DSCLK	JTAG reset/BDM clock	I
D5	TDO	DSO	—	—	TDO/DSO	JTAG test data out /BDM data out	O
D6	A19	—	—	—	A19	A19	O
D7	A17	—	—	—	A17	A17	O

Table 19-2. Signal Name and Description by Pin Number (Sheet 3 of 8)

Map BGA Pin	Pin Functions				Name	Description	I/O
	0 (Reset)	1	2	3			
D8	A16	—	—	—	A16	A16	O
D9	A15	—	—	—	A15	A15	O
D10	A0	—	—	—	A0	A0	O
D11	D14	PC14	—	—	D14/PC14	D14/port C bit 14	I/O
D12	A10	SDA9	SDA8	—	A10/SDA9/SDA8	A10/SDRAM-16bit A9/SDRAM-32bit A8	O
D13	SDCLKE	—	—	—	SDCLKE	SDRAM clock enable	O
D14	A10_PRECHG	—	—	—	A10_PRECHG	SDRAM A10_Precharge	O
E1	PA6	USB_RxD	—	—	PA6/USB_RxD	Port A bit 6/USB receive data output	I/O
E2	PA5	USB_TxEN	—	—	PA5/USB_TxEN	Port A bit 5/USB transmitter enable	I/O
E3	PA4	USB_ Susp	—	—	PA4/USB_Susp	Port A bit 4/ Suspend USB driver	I/O
E4	PA3	USB_TN	—	—	PA3/USB_TN	Port A bit 3/ USB Tx negative	I/O
E5	PA2	USB_RN	—	—	PA2/USB_RN	Port A bit 2/ USB Rx negative	I/O
E6	TEST	–	—	—	TEST	Device test mode enable	I
E7	GND	Ground	—	—	GND		
E8	GND	Ground	—	—	GND		
E9	A22	–	—	—	A22	A22	O
E10	D15	PC15	—	—	D15/PC15	D15/port C bit 15	I/O
E11	D13	PC13	—	—	D13/PC13	D13/port C bit 13	I/O
E12	BS2	—	—	—	BS2	Byte strobe 2	O
E13	BS3	—	—	—	BS3	Byte strobe 3	O
E14	SDCLK	—	—	—	SDCLK	SDRAM (bus) clock, Same frequency as CPU clock	O
F1	USB_D+	—	—	—	USB_D+	USB line driver high, analog	O
F2	USB_D-	—	—	—	USB_D-	USB line driver low, analog	O
F3	PB5	TA	—	—	PB5/$\overline{TA}$	Port B bit 5/Transfer acknowledge	I/O
F4	RSTO	—	—	—	RSTO	Reset output strobe	O
F5	VDD	+3.3V	—	—	VDD		

Table 19-2. Signal Name and Description by Pin Number (Sheet 4 of 8)

Map BGA Pin	Pin Functions				Name	Description	I/O
	0 (Reset)	1	2	3			
F6	VDD	+3.3V	—	—	VDD		
F7	GND	Ground	—	—	GND		
F8	GND	Ground	—	—	GND		
F9	VDD	+3.3V	—	—	VDD		
F10]	VDD	+3.3V	—	—	VDD		
F11	D12	PC12	—	—	D12/PC12	D12/port C bit 12	I/O
F12	D24	D8	—	—	D24/D8	D24/D8	I/O
F13	D25	D9	—	—	D25/D9	D25/D9	I/O
F14	D26	D10	—	—	D26/D10	D26/D10	I/O
G1	USB_VDD	—	—	—	USB_VDD	USB transceiver VDD	I
G2	USB_GND	—	—	—	USB_GND	USB transceiver GND	I
G3	PB4	URT0_CLK	—	—	PB4/URT0_CLK	Port B bit 4/UART0 baud clock	I/O
G4	PB6	—	—	—	PB6	Port B bit 6	I/O
G5	VDD	+3.3V	—	—	VDD		
G6	GND	Ground	—	—	GND		
G7	GND	Ground	—	—	GND		
G8	GND	Ground	—	—	GND		
G9	GND	Ground	—	—	GND		
G10	VDD	+3.3V	—	—	VDD		
G11	D11	PC11	—	—	D11/PC11	D11/port C bit 11	I/O
G12	D27	D11	—	—	D27/D11	D27/D11	I/O
G13	D28	D12	—	—	D28/D12	D28/D12	I/O
G14	D29	D13	—	—	D29/D13	D29/D13	I/O
H1	PB1	URT0_RxD	—	—	PB1/URT0_RxD	Port B bit 1/UART0 Rx data	I/O
H2	PB2	URT0_ CTS	—	—	PB2/$\overline{\text{URT0_CTS}}$	Port B bit 2/UART0 CTS	I/O
H3	PB3	URT0_ RTS	—	—	PB3/$\overline{\text{URT0_RTS}}$	Port B bit 3/UART0 RTS	I/O
H4	PB0	URT0_TxD	—	—	PB0/URT0_TxD	Port B bit 0/UART0 Tx data	I/O
H5	VDD	+3.3V	—	—	VDD		
H6	GND	Ground	—	—	GND		
H7	GND	Ground	—	—	GND		

Table 19-2. Signal Name and Description by Pin Number (Sheet 5 of 8)

Map BGA Pin	Pin Functions				Name	Description	I/O
	0 (Reset)	1	2	3			
H8	GND	Ground	—	—	GND		
H9	GND	Ground	—	—	GND		
H10	VDD	+3.3V	—	—	VDD		
H11	D10	PC10	—	—	D10/PC10	D10/port C bit 10	I/O
H12	SDBA1	—	—	—	SDBA1	SDRAM bank 1 select	O
H13	D31	D15	—	—	D31/D15	D31/D15	I/O
H14	D30	D14	—	—	D30/D14	D30/D14	I/O
J1	USB_CLK	—	—	—	USB_CLK	USB external 48-MHz clock input	I
J2	PA8	FSC0/ FSR0	—	—	PA8/FSC0/FSR0	Port A bit 8/IDL FSR0 & GCI FSC0	I/O
J3	PA9	DGNT0	—	—	PA9/DGNT0	Port A bit 9//IDL DGNT0	I/O
J4	High Z	DCL0	URT1_CLK	—	DCL0/URT1_CLK	Port 0 data clock/UART1 baud clock	I
J5	VDD	+3.3V	—	—	VDD		
J6	VDD	+3.3V	—	—	VDD		
J7	GND	Ground	—	—	GND		
J8	GND	Ground	—	—	GND		
J9	VDD	+3.3V	—	—	VDD		
J10	VDD	+3.3V	—	—	VDD		
J11	D7	PC7	—	—	D7/PC7	D7/port C bit 7	I/O
J12	D8	PC8	—	—	D8/PC8	D8/port C bit 8	I/O
J13	D9	PC9	—	—	D9/PC9	D9/port C bit 9	I/O
J14	SDBA0	—	—	—	SDBA0	SDRAM bank 0 select	O
K1	High Z	DIN0	URT1_RxD	—	DIN0/URT1_RxD	IDL/GCI data in/UART1 Rx data	I
K2	High Z	—	$\overline{\text{URT1_CTS}}$	QSPI_ CS2	$\overline{\text{URT1_CTS}}$/QSPI_CS2	UART1 CTS/QSPI_CS2	I/O
K3	High Z	—	URT1_RTS	INT5	$\overline{\text{URT1_RTS}}$/$\overline{\text{INT5}}$	UART1 RTS/$\overline{\text{INT5}}$	I/O
K4	High Z	DOUT0	URT1_TxD	—	DOUT0/URT1_TxD	IDL-GCI data Out/UART1 Tx data	O
K5	PA10	DREQ0	—	—	PA10/DREQ0	Port A bit 10/IDL DREQ0	I/O
K6	High Z	PWM_ OUT2	TIN1	—	PWM_OUT2/TIN1	PWM output compare 2 /Timer 1 input	I/O
K7	VDD	+3.3V	—	—	VDD		
K8	VDD	+3.3V	—	—	VDD		

Table 19-2. Signal Name and Description by Pin Number (Sheet 6 of 8)

Map BGA Pin	Pin Functions				Name	Description	I/O
	0 (Reset)	1	2	3			
K9	$\overline{CS0}$/Boot	—	—	—	$\overline{CS0}$/Boot	Chip select 0	O
K10	CS1	—	—	—	CS1	Chip select 1	O
K11	D3	PC3	—	—	D3/PC3	D3/port C bit 3	I/O
K12	D4	PC4	—	—	D4/PC4	D4/port C bit 4	I/O
K13	D5	PC5	—	—	D5/PC5	D5/port C bit 5	I/O
K14	D6	PC6	—	—	D6/PC6	D6/port C bit 6	I/O
L1	PA11	—	QSPI_CS1	—	PA11/QSPI_CS1	Port A bit 11/QSPI chip select 1	I/O
L2	PA12	DFSC2	—	—	PA12/DFSC2	Port A bit 12/Delayed frame sync 2	I/O
L3	PA13	DFSC3	—	—	PA13/DFSC3	Port A bit 13/Delayed frame sync 3	I/O
L4	FSC1/FSR1/ DFSC1	—	—	—	FSC1/FSR1/DFSC1	PLIC port 1 IDL FSR/GCI FSC1/Generated frame sync 1 Out	I/O
L5	QSPI_CLK/ BUSW1	—	—	—	QSPI_CLK / BUSW1	QSPI serial clock/CS0 bus width bit 1	O
L6	TIN0	—	—	—	TIN0	Timer 0 input	I
L7	E_Tx CLK	—	—	—	E_Tx CLK	Ethernet Tx clock	I
L8	PB10	E_TxD1	—	—	PB10/E_TxD1	Port B bit 10/Tx data bit 1 (100 Base-T Ethernet only)	I/O
L9	PB14	E_RxER	—	—	PB14/E_RxER	Port B bit 14/Receive Error (100 Base-T Ethernet only)	I/O
L10	E_CRS	—	—	—	E_CRS	Carrier sense (100 base-T Ethernet only)	I
L11	CS5	—	—	—	CS5	Chip select 5	O
L12	D0	PC0	—	—	D0/PC0	D0/port C bit 0	I/O
L13	D1	PC1	—	—	D1/PC1	D1/port C bit 1	I/O
L14	D2	PC2	—	—	D2/PC2	D2/port C bit 2	I/O
M1	DCL1/ GDCL1_OUT	—	—	—	DCL1/GDCL1_OUT	PLIC ports 1, 2, 3 data clock/Generated DCL out	I/O
M2	PA14	DREQ1	—	—	PA14/DREQ1	Port A bit 14/PLIC port 1 IDL D-channel request	I/O
M3	PA15_INT6	DGNT1_$\overline{INT6}$	—	—	PA15_$\overline{INT6}$/DGNT1_$\overline{INT6}$	Port A bit 15/PLIC port 1 D-channel grant/Interrupt 6 input	I/O

Table 19-2. Signal Name and Description by Pin Number (Sheet 7 of 8)

Map BGA Pin	Pin Functions				Name	Description	I/O
	0 (Reset)	1	2	3			
M4	$\overline{\text{INT1}}$/ USB_WOR	—	—	—	$\overline{\text{INT1}}$/ USB_WOR	Interrupt input 1/USB wake-on-ring	I
M5	QSPI_CS0/ BUSW0	—	—	—	QSPI_CS0 / BUSW0	QSPI peripheral chip select 0/$\overline{\text{CS0}}$ bus width bit 0	O
M6	PB7	TOUT0	—	—	PB7/TOUT0	Port B bit 7/Timer 0 output compare	I/O
M7	E_RxDV	—	—	—	E_RxDV	Ethernet Rx data valid	I
M8	PB9	E_TxD2	—	—	PB9/E_TxD2	Port B bit 9/Tx data bit 2 (100 Base-T Ethernet only)	I/O
M9	PB13	E_RxD1	—	—	PB13/E_RxD1	Port B bit 13/Rx data bit 1 (100 Base-T Ethernet only)	I/O
M10	E_TxER	—	—	—	E_TxER	Transmit error (100 base-T Ethernet only)	O
M11	CS4	—	—	—	CS4	Chip select 4	O
M12	RSTI	—	—	—	RSTI	Device reset	I
M13	BYPASS	—	—	—	BYPASS	Bypass internal test mode	O
M14	CLKIN	—	—	—	CLKIN	CPU external clock input	I
N1	DOUT1	—	—	—	DOUT1	PLIC ports 1, 2, 3 data output	O
N2	DIN1	—	—	—	DIN1	PLIC ports 1, 2, 3 data input	I
N3	INT3	—	—	—	INT3	Interrupt input 3	I
N4	QSPI_Dout/ WSEL	—	—	—	QSPI_Dout / WSEL	QSPI data output/Bus width selection	I/O
N5	PWM_OUT0	—	—	—	PWM_OUT0	PWM output compare 0	O
N6	E_TxD0	—	—	—	E_TxD0	Ethernet Tx data	O
N7	E_RxCLK	—	—	—	E_RxCLK	Ethernet Rx clock	I
N8	PB8	E_TxD3	—	—	PB8/E_TxD3	Port B bit 8/Tx data bit 3 (100 Base-T Ethernet only)	I/O
N9	PB12	E_RxD2	—	—	PB12/E_RxD2	Port B bit 12/Rx data bit 2 (100 Base-T Ethernet only)	I/O
N10	E_MDIO	—	—	—	E_MDIO	Management channel serial data (100 base-T only)	I/O

Table 19-2. Signal Name and Description by Pin Number (Sheet 8 of 8)

Map BGA Pin	Pin Functions				Name	Description	I/O
	0 (Reset)	1	2	3			
N11	CS3	—	—	—	CS3	Chip select 3	O
N12	DRESETEN	—	—	—	DRESETEN	DRAM controller reset enable	I
N13	VDD	+3.3V	—	—			
N14	HIZ	—	—	—	HiZ	High impedance enable	I
P1	PA7	QSPI_CS3	DOUT3	—	PA7/QSPI_CS3/DOUT3	PA7/QSPI chip select 4/PLIC port 3 data output	I/O
P2	High Z	—	DIN3	INT4	DIN3/$\overline{\text{INT4}}$	Interrupt 4 input/PLIC port 3 data input	I
P3	INT2	—	—	—	INT2	Interrupt input 1	I
P4	QSPI_Din	—	—	—	QSPI_Din	QSPI data input	I
P5	High Z	PWM_ OUT1	TOUT1	—	PWM_OUT1/TOUT1	PWM output compare 1 /Timer 1 output compare	O
P6	E_COL	—	—	—	E_COL	Collision	I
P7	E_RxD0	—	—	—	E_RxD0	Ethernet Rx data	I
P8	E_TxEN	—	—	—	E_TxEN	Ethernet Tx enable	O
P9	PB11	E_RxD3	—	—	PB11/E_RxD3	Port B bit 11/Rx data bit 3 (100 Base-T Ethernet only)	I/O
P10	PB15	E_MDC	—	—	PB15/E_MDC	Port B bit 15/ Management Channel Clock (100 Base-T only)	I/O
P11	CS2	—	—	—	CS2	Chip select 2	O
P12	CS6	—	—	—	$\overline{\text{CS6}}$/AEN	Chip select 6	O
P13	$\overline{\text{OE}}$/RD	—	—	—	$\overline{\text{OE}}$/RD	Output enable/Read	O
P14	R/$\overline{\text{W}}$	—	—	—	R/$\overline{\text{W}}$	Read/Write	O

19.3 Address Bus (A[22:0]/SDA[13:0])

The 23 dedicated address signals, A[22:0], define the address of external byte, word, and longword accesses. These three-state outputs are the 23 lsbs of the internal 32-bit address bus and are multiplexed with the SDRAM controller row and column addresses (SDA[13:0]).

Fourteen address signals are used for connecting to SDRAM devices as large as 256 Mbits.

The MCF5272 supports SDRAM widths of 16 or 32 bits. For a 32-bit width, SDRAM address signals are multiplexed starting with A2. For a 16-bit width, address signals are multiplexed starting with A1.

19.4 Data Bus (D[31:0])

The 32-bit, three-state, bidirectional, non-multiplexed data bus transfers data to and from the MCF5272. A read or write operation can transfer 8, 16, or 32 bits in one bus cycle. When a 16-bit data bus is used, mode parallel port C pins can be multiplexed onto D[15:0].

Data read from or written to on-chip peripherals is visible on the external data bus when the device's external bus width is 32 bits. When the device is configured for external 16-bit wide data bus and the data access is 32 bits wide, the lower 16 bits of on-chip data are not visible externally. On-chip cache, ROM, and SRAM accesses are not visible externally.

19.4.1 Dynamic Data Bus Sizing

When the device is in normal mode, dynamic bus sizing lets the programmer change data bus width between 8, 32, and 16 bits for each chip select. The initial width for the bootstrap program chip select, $\overline{CS0}$, is determined by the state of BUSW[1:0]. The program should select bus widths for the other chip selects before accessing the associated memory space.

19.5 Chip Selects ($\overline{CS7}$/$\overline{SDCS}$, $\overline{CS}$[6:0])

The eight chip selects, $\overline{CS}$[7:0], allow the MCF5272 to interface directly to SRAM, EPROM, EEPROM, and external memory-mapped peripherals. These signals can be programmed for an address location, with masking capabilities, port size, burst capability indication, and wait-state generation.

$\overline{CS0}$ provides a special function as a global chip select that allows access to boot ROM at reset. $\overline{CS0}$ can have its address redefined after reset. $\overline{CS0}$ is the only chip select initialized and enabled during reset. All other chip selects are disabled at reset and must be initialized by device initialization software.

$\overline{CS7}$/$\overline{SDCS}$ can be configured to access RAM or ROM or one physical bank of SDRAM. Only $\overline{CS7}$ can be used for SDRAM chip select.

19.6 Bus Control Signals

This section describes bus control signals.

19.6.1 Output Enable/Read ($\overline{OE}$/RD)

The output enable/read signal ($\overline{OE}$/RD) defines the data transfer direction for the data bus D[31:0] for accesses to SRAM, ROM or external peripherals. A low (logic zero) level indicates a read cycle while a high (logic one) indicates a write cycle.

This signal is normally connected to the $\overline{OE}$ pins of external SRAM, ROM, or FLASH.

19.6.2 Byte Strobes ($\overline{BS}$[3:0])

The byte strobes ($\overline{BS}$[3:0]) define the flow of data on the data bus. During SRAM and peripheral accesses, these outputs indicate that data is to be latched or driven onto a byte of the data when driven low. $\overline{BS}n$ signals are asserted only to the memory bytes used during a read or write access.

$\overline{BS}n$ signals are asserted during accesses to on-chip peripherals but not to on-chip SRAM, cache, or ROM. During SDRAM accesses, these signals indicate a byte transfer between SDRAM and the MCF5272 when driven high.

For SRAM or FLASH devices, $\overline{BS}$[3:0] outputs should be connected to individual byte strobe signals.

For SDRAM devices, $\overline{BS}$[3:0] should be connected to individual SDRAM DQM signals. Note that most SDRAMs associate DQM3 with the MSB, in which case $\overline{BS3}$ should be connected to the SDRAM's DQM3 input.

Table 19-3. Byte Strobe Operation for 32-Bit Data Bus

$\overline{BS3}$	$\overline{BS2}$	$\overline{BS1}$	$\overline{BS0}$	Access Type	Access Size	Data Located On
1	1	1	1	None	None	—
1	1	1	0	FLASH/SRAM	Byte	D[31:24]
1	1	0	1	FLASH/SRAM		D[23:16]
1	0	1	1	FLASH/SRAM		D[15:8]
0	1	1	1	FLASH/SRAM		D[7:0]
1	1	0	0	FLASH/SRAM	Word	D[31:16]
0	0	1	1	FLASH/SRAM		D[15:0]
0	0	0	0	FLASH/SRAM	Longword	D[31:0]
1	1	1	0	SDRAM	Byte	D[7:0]
1	1	0	1	SDRAM		D[15:8]
1	0	1	1	SDRAM		D[23:16]
0	1	1	1	SDRAM		D[31:24]
1	1	0	0	SDRAM	Word	D[15:0]
0	0	1	1	SDRAM		D[31:16]
0	0	0	0	SDRAM	Longword	D[31:0]

Table 19-4. Byte Strobe Operation for 16-Bit Data Bus—SRAM Cycles

BS1	BS0	Access Size	Data Located On
1	1	None	—
1	0	Byte	D[31:24]
0	1	Byte	D[23:16]
0	0	Word	D[31:16]

Table 19-5. Byte Strobe Operation for 16-Bit Data Bus—SDRAM Cycles

$\overline{BS3}$	$\overline{BS2}$	Access Type	Data Located On
1	1	None	—
1	0	Byte	D[23:16]
0	1	Byte	D[31:24]
0	0	Word	D[31:16]

NOTE

In 16-bit bus mode, longword accesses are performed as two sequential word accesses.

Table 19-6 shows how $\overline{BS}$[3:0] should be connected to DQM*x* for 16- and 32-bit SDRAM configurations.

Table 19-6. Connecting $\overline{BS}$[3:0] to DQM*x*

5272		SDRAM			Data Signals
16 Bit	32 Bit	16 Bit	32 Bit (2 x 16)	32 Bit (1 x 32)	
BS3	BS3	DQMH	DQMH	DQM3	D[31:24]
BS2	BS2	DQML	DQML	DQM2	D[23:16]
NC	BS1	NC	DQMH	DQM1	D[15:8]
NC	BS0	NC	DQML	DQM0	D[7:0]

19.6.3 Read/Write (R/$\overline{W}$)

R/$\overline{W}$ is programmed on a per-chip-select basis for use with SRAM and external peripheral write accesses. It should be connected to the external peripheral or memory write enable signal.

R/$\overline{W}$ acts as a write strobe to external SRAM when the decoded chip select is configured for either of the two SRAM/ROM modes. It is asserted during on-chip peripherals accesses and negated during on-chip SRAM accesses.

19.6.4 Transfer Acknowledge ($\overline{TA}$/PB5)

Assertion of the transfer acknowledge ($\overline{TA}$/PB5) input terminates an external bus cycle. It is enabled on a per chip select basis by programming the wait state field to 0x1F in the corresponding chip select option register (CSOR*n*[WS]). This pin requires a 4.7-K¾ pull-up resistor or external logic that drives inactive high.

$\overline{TA}$ must always be returned high before it can be detected again. Asserting $\overline{TA}$ into the next bus cycle has no effect and does not terminate the bus cycle.

NOTE:

Even though EBI modes set to SDRAM require setting the wait state field in the chip select option register to 31, a low signal should never be applied to $\overline{TA}$ during such accesses. For SDRAM accesses the bus cycle is terminated internally by circuitry in the SDRAM module.

19.6.5 Hi-Z

$\overline{HiZ}$ is a test signal. When it is connected to GND during reset, all output pins are driven to high impedance. A 4.7-K¾ pullup resistor should be connected to this signal if the Hi-Z function is not used. Hi-Z configuration input is sampled on the rising edge of Reset Output ($\overline{RSTO}$).

19.6.6 Bypass

Bypass is a Freescale test mode signal. This signal should be left unconnected.

19.6.7 SDRAM Row Address Strobe ($\overline{RAS0}$)

$\overline{RAS0}$ is the SDRAM row address strobe output.

19.6.8 SDRAM Column Address Strobe ($\overline{CAS0}$)

$\overline{CAS0}$ is the SDRAM column address strobe output.

19.6.9 SDRAM Clock (SDCLK)

The SDRAM clock output (SDCLK) is the same frequency as the CPU clock.

19.6.10 SDRAM Write Enable ($\overline{SDWE}$)

This output is the SDRAM write enable.

19.6.11 SDRAM Clock Enable (SDCLKE)

This output is the SDRAM clock enable.

19.6.12 SDRAM Bank Selects (SDBA[1:0])

These outputs are the SDRAM bank select signals.

19.6.13 SDRAM Row Address 10 (A10)/A10 Precharge (A10_PRECHG)

This output is the SDRAM row address 10 and the precharge strobe.

19.7 CPU Clock and Reset Signals

This section describes clock and reset signals in the CPU.

19.7.1 $\overline{\text{RSTI}}$

$\overline{\text{RSTI}}$ is the primary reset input to the device. Asserting $\overline{\text{RSTI}}$ immediately resets the CPU and peripherals. However, the reset of the SDRAM controller and hence SDRAM contents depend on $\overline{\text{DRESETEN}}$. Asserting $\overline{\text{RSTI}}$ also causes $\overline{\text{RSTO}}$ to be asserted for 32K CPU clock cycles.

19.7.2 $\overline{\text{DRESETEN}}$

$\overline{\text{DRESETEN}}$ is asserted to indicate that the SDRAM controller is to be reset whenever $\overline{\text{RSTI}}$ asserts. If $\overline{\text{DRESETEN}}$ is high, $\overline{\text{RSTI}}$ does not affect the SDRAM controller, which continues to refresh external memory. This is useful for debug situations where a reset of the device is required without losing data located in SDRAM. $\overline{\text{DRESETEN}}$ is normally tied high or low depending on system requirements. It should never be tied to $\overline{\text{RSTI}}$ or $\overline{\text{RSTO}}$.

19.7.3 CPU External Clock (CLKIN)

CLKIN should be connected to an external clock oscillator. The CLKIN input frequency can range from DC to 66 MHz. The frequency input to this signal must be greater than twice the frequency applied at E_Tx CLK. The clock frequency applied to CLKIN must exceed 24 MHz when the system uses a USB peripheral.

19.7.4 Reset Output ($\overline{\text{RSTO}}$)

Reset output ($\overline{\text{RSTO}}$) is driven low for 128 CPU clocks when the soft reset bit of the system configuration register (SCR[SOFTRST]) is set. It is driven low for 32K CPU clocks when the software watchdog timer times out or when a low input level is applied to $\overline{\text{RSTI}}$.

19.8 Interrupt Request Inputs ($\overline{\text{INT}}$[6:1])

The six interrupt request inputs ($\overline{\text{INT}}$[6:1]) can generate separate, maskable interrupts on negative edge (high to low) or positive edge (low to high) transitions. In addition to the triggering edge being programmable, the priority can also be programmed. Each interrupt input has a separate programmable interrupt level.

After a device reset, $\overline{\text{INT}}$[4:1] are enabled but the function is masked. $\overline{\text{INT4}}$/DIN3 function can be changed by software. $\overline{\text{INT}}$[3:1] functions are always assigned to dedicated pins.

Interrupts $\overline{\text{INT}}$[6:4] are multiplexed with other functions as follows:

- $\overline{\text{DGNT1_INT6}}$/$\overline{\text{PA15_INT6}}$
- $\overline{\text{INT5}}$/$\overline{\text{URT1_RTS}}$
- $\overline{\text{INT4}}$/DIN3

$\overline{\text{INT1}}$ is also internally connected to the USC_WOR function.

The $\overline{\text{INT6}}$ function is always available regardless of the other functions enabled on this pin.

19.9 General-Purpose I/O (GPIO) Ports

Each of the three GPIO ports is 16 bits wide. Each port line can be individually configured as input or output. Except where indicated, each pin function is independently selectable between the corresponding port pin or the other functions that may be multiplexed onto the pin. After reset all pins multiplexed with GPIO signals default to inputs.

Port A general purpose I/O, PA[15:8] are multiplexed with PLIC TDM port 1 pins.

Port A general purpose I/O, PA[6:0] are multiplexed with USB module signals. PA7 is multiplexed with QSPI_CS3 and DOUT3.

Port B general purpose I/O, PB[4:0] are multiplexed with the UART0 interface pins. If the UART0 interface is enabled, PB[4:0] are unavailable. PB5 is multiplexed with $\overline{\text{TA}}$. PB6 is dedicated. PB7 is multiplexed with TOUT0.

Port B general purpose I/O, PB[15:8] are multiplexed with the Ethernet interface pins. If the Ethernet interface is enabled, PB[15:8] are unavailable.

Port C general purpose I/O, PC[15:0] are multiplexed with D[15:0]. When 32-bit wide bus mode is selected, port C is unavailable.

19.10 UART0 Module Signals and PB[4:0]

The UART0 module uses the signals in this section for data and clock signals.

These signals are multiplexed with the GPIO port B signals PB[4:0].

19.10.1 Transmit Serial Data Output (URT0_TxD/PB0)

UART0 mode: URT0_TxD is the transmitter serial data output for the UART0 module. The output is held high (mark condition) when the transmitter is disabled, idle, or in the local loopback mode. Data is shifted out, lsb first, on this pin at the falling edge of the serial clock source.

Port B mode: This pin can also be configured as the PB0 I/O.

19.10.2 Receive Serial Data Input (URT0_RxD/PB1)

UART0 mode: URT0_RxD is the receiver serial data input for the UART0 module. Data received on this pin is sampled on the rising edge of the serial clock source lsb first. When the UART0 clock is stopped for power-down mode, any transition on this pin restarts it.

Port B mode: This pin can also be configured as the PB1 I/O.

19.10.3 Clear-to-Send ($\overline{\text{URT0_CTS}}$/PB2)

UART0 mode: Asserting the $\overline{\text{URT0_CTS}}$ input is the clear-to-send (CTS) input, indicating to the UART0 module that it can begin data transmission.

Port B mode: This pin can also be configured as the PB2 I/O.

19.10.4 Request to Send ($\overline{\text{URT0_RTS}}$/PB3)

UART0 mode: Asserting $\overline{\text{URT0_RTS}}$ output is an automatic request to send output from the UART0 module. $\overline{\text{URT0_RTS}}$ can also be configured to be asserted and negated as a function of the RxFIFO level.

Port B mode: This pin can also be configured as the PB3 I/O.

19.10.5 Clock (URT0_CLK/PB4)

UART0 mode: URT0_CLK provides a clock input that can be a 1x or 16x baud rate clock.

Port B mode: This pin can also be configured as the PB4 I/O.

19.11 USB Module Signals and PA[6:0]

The USB module uses the signals in this section for data and clock signals. These signals are multiplexed with the GPIO port A signals PA[6:0].

19.11.1 USB Transmit Serial Data Output (USB_TP/PA0)

USB mode: USB_TP is the non-inverted data transmit output.

Port A mode: This pin can also be configured as the PA0 I/O.

19.11.2 USB Receive Serial Data Input (USB_RP/PA1)

USB mode: USB_RP is the non-inverted receive data input.

Port A mode: This pin can also be configured as the PA1 I/O.

19.11.3 USB Receive Data Negative (USB_RN/PA2)

USB mode: USB_RN is the inverted receive data input.

Port A mode: This pin can also be configured as the PA2 I/O.

19.11.4 USB Transmit Data Negative (USB_TN/PA3)

USB mode: USB_TN is the inverted data transmit output.

Port A mode: This pin can also be configured as the PA3 I/O.

19.11.5 USB Suspend Driver (USB_SUSP/PA4)

USB mode: USB_SUSP is used to put the USB driver in suspend operation.

Port A mode: This pin can also be configured as the PA4 I/O.

19.11.6 USB Transmitter Output Enable ($\overline{\text{USB_TxEN}}$/PA5)

USB mode: $\overline{\text{USB_TxEN}}$ enables the transceiver to transmit data on the bus. It requires a 4.7-K¾ pullup resistor to ensure that the external USB Tx driver is off between the MCF5272 coming out of reset and initializing the port A pin configuration register.

Port A mode: This pin can also be configured as the PA5 I/O.

19.11.7 USB Rx Data Output (USB_RxD/PA6)

USB mode: USB_RxD is the receive data output from the differential receiver inputs USB_RN and USB_RP.

Port A mode: This pin can also be configured as the PA6 I/O.

19.11.8 USB_D+ and USB_D-

USB_D+ and USB_D- are the on-chip USB interface transceiver signals. When these signals are enabled, the USB module uses them to communicate to an external USB bus. When not used, each signal should be pulled to VDD using a 4.7-K¾ resistor.

19.11.9 USB_CLK

USB_CLK is used to connect an external 48-MHz oscillator to the USB module. When this pin is tied to GND or VDD, the USB module automatically uses the internal CPU clock. In this case the CLKIN must be 48 MHz if the system is to use the USB function.

19.11.10 $\overline{\text{INT1}}$/USB Wake-on-Ring (USB_WOR)

The USB module allows for $\overline{\text{INT1}}$ to generate the USB wake-on-ring signal to the USB host controller. This function is enabled by a control bit in the USB module. WOR is provided to allow the CPU and the USB interface to be woken up when in power down mode. This occurs when the USB controller detects a resume state at the USB inputs.

The interrupt output of an ISDN transceiver, such as the MC145574, can be connected to $\overline{\text{INT1}}$/USB_WOR. Before putting the device into sleep mode, the USB module's wake on ring function

can be enabled, the $\overline{\text{INT1}}$ interrupt can be disabled, and USB power-down modes can be enabled along with its interrupt. Then when the ISDN transceiver is activated, its interrupt request can generate the USB wake on ring signal, which causes the host controller on the PC to initiate USB traffic to the device. This in turn causes the USB module to wake up the CPU. Note that USB_WOR, when configured by setting USBEPCTL0[WOR_EN], is level-sensitive.

19.12 Timer Module Signals

This section describes timer module signals.

19.12.1 Timer Input 0 (TIN0)

The timer input (TIN0) can be programmed to cause events to occur in timer counter 1. It can either clock the event counter or provide a trigger to the timer value capture logic.

19.12.2 Timer Output (TOUT0)/PB7

Timer mode: Timer output (TOUT0) is the output from timer 0.

Port B mode: This pin can also be configured as I/O pin PB7.

19.12.3 Timer Input 1 (TIN1)/PWM Mode Output 2 (PWM_OUT2)

Timer mode: Timer input 1 (TIN1) can be programmed as an input that causes events to occur in timer counter 2. This can either clock the event counter or provide a trigger to the timer value capture logic.

PWM mode: Pulse-width modulator 2 (PWM_OUT2) compare output.

19.12.4 Timer Output 1 (TOUT1)/PWM Mode Output 1 (PWM_OUT1)

Timer mode: Timer output (TOUT1) is the output from timer 1.

PWM mode: Pulse-width modulator 1 (PWM_OUT1) compare output.

19.13 Ethernet Module Signals

The following signals are used by the Ethernet module for data and clock signals.

These signals are multiplexed with the parallel port B PB15–PB8 signals.

19.13.1 Transmit Clock (E_TxCLK)

This is an input clock which provides a timing reference for E_TxEN, E_TxD[3:0] and E_TxER.

19.13.2 Transmit Data (E_TxD0)

E_TxD0 is the serial output Ethernet data and is only valid during the assertion of Tx_EN. This signal is used for 10-Mbps Ethernet data. This signal is also used for MII mode data in conjunction with E_TxD[3:1].

19.13.3 Collision (E_COL)

The E_COL input is asserted upon detection of a collision and remains asserted while the collision persists. This signal is not defined for full-duplex mode.

19.13.4 Receive Data Valid (E_RxDV)

Asserting the receive data valid (E_RxDV) input indicates that the PHY has valid nibbles present on the MII. E_RxDV should remain asserted from the first recovered nibble of the frame through to the last nibble. Assertion of E_RxDV must start no later than the SFD and exclude any EOF.

19.13.5 Receive Clock (E_RxCLK)

The receive clock (E_RxCLK) input provides a timing reference for E_RxDV, E_RxD[3:0], and E_RxER.

19.13.6 Receive Data (E_RxD0)

E_RxD0 is the Ethernet input data transferred from the PHY to the media-access controller when E_RxDV is asserted. This signal is used for 10-Mbps Ethernet data. This signal is also used for MII mode Ethernet data in conjunction with E_RxD[3:1].

19.13.7 Transmit Enable (E_TxEN)

The transmit enable (E_TxEN) output indicates when valid nibbles are present on the MII. This signal is asserted with the first nibble of a preamble and is negated before the first E_TxCLK following the final nibble of the frame.

19.13.8 Transmit Data (E_TxD[3:1]/PB[10:8])

Ethernet mode: These pins contain the serial output Ethernet data and are valid only during assertion of E_TxEN in MII mode.

Port B mode: These pins can also be configured as I/O pins PB[10:8].

19.13.9 Receive Data (E_RxD[3:1]/PB[13:11])

Ethernet mode: These pins contain the Ethernet input data transferred from the PHY to the media-access controller when E_RxDV is asserted in MII mode operation.

Port B mode: These pins can also be configured as I/O pins PB[13:11].

19.13.10 Receive Error (E_RxER/PB14)

Ethernet mode: E_RxER is an input signal which when asserted along with E_RxDV signals that the PHY has detected an error in the current frame. When E_RxDV is not asserted E_RxER has no effect. Applies to MII mode operation.

Port B mode: This pin can also be configured as PB14 I/O.

19.13.11 Management Data Clock (E_MDC/PB15)

Ethernet mode: E_MDC is an output clock which provides a timing reference to the PHY for data transfers on the E_MDIO signal. Applies to MII mode operation.

Port B mode: This pin can also be configured as I/O pin PB15.

19.13.12 Management Data (E_MDIO)

The bidirectional E_MDIO signal transfers control information between the external PHY and the media-access controller. Data is synchronous to E_MDC. Applies to MII mode operation. This signal is an input after reset. When the FEC is operated in 10Mbps 7-wire interface mode, this signal should be connected to Vss.

19.13.13 Transmit Error (E_TxER)

Ethernet mode: When the E_TxER output is asserted for one or more clock cycles while E_TxEN is also asserted, the PHY sends one or more illegal symbols. E_TxER has no effect at 10 Mbps or when E_TxEN is negated. Applies to MII mode operation.

19.13.14 Carrier Receive Sense (E_CRS)

E_CRS is an input signal which when asserted signals that transmit or receive medium is not idle. Applies to MII mode operation.

19.14 PWM Module Signals (PWM_OUT0–PWM_OUT2])

PWM_OUT0–PWM_OUT2 are the outputs of the compare logic within the pulse-width modulator (PWM) modules.

- PWM_OUT0 is always available.
- PWM_OUT1 is multiplexed with TOUT1.
- PWM_OUT2 is multiplexed with TIN1.

19.15 Queued Serial Peripheral Interface (QSPI) Signals

This section describes signals used by the queued serial peripheral interface (QSPI) module. Four QSPI chip selects, QSPI_CS[3:0], are multiplexed with the physical layer interface pins and GPIO port A. QSPI_CS0 is always available. QSPI_CS3 is multiplexed with DOUT3 and PA7.

19.15.1 QSPI Synchronous Serial Data Output (QSPI_Dout/WSEL)

The QSPI synchronous serial data output (QSPI_Dout) can be programmed to be driven on the rising or falling edge of SCK. Each byte is sent msb first.

WSEL configuration input is sampled on the rising edge of Reset Output ($\overline{\text{RSTO}}$).

19.15.2 QSPI Synchronous Serial Data Input (QSPI_Din)

The QSPI synchronous serial data input (QSPI_Din) can be programmed to be sampled on the rising or falling edge of QSPI_CLK. Each byte is written to RAM lsb first.

19.15.3 QSPI Serial Clock (QSPI_CLK/BUSW1)

The QSPI serial clock (QSPI_CLK/BUSW1) provides the serial clock from the QSPI. The polarity and phase of QSPI_CLK are programmable. The output frequency is programmed according to the following formula, in which *n* can be any value between 1 and 255:

$$\text{QSPI_CLK} = \text{CLKIN}/(2 \times n)$$

At reset, QSPI_CLK/BUSW1 is used to configure the width of memory connected to $\overline{\text{CS0}}$.

BUSW1 configuration input is sampled on the rising edge of Reset Output ($\overline{\text{RSTO}}$).

19.15.4 Synchronous Peripheral Chip Select 0 (QSPI_CS0/BUSW0)

The synchronous peripheral chip select 0 (QSPI_CS0) output provides a QSPI peripheral chip select that can be programmed to be active high or low. During reset, this pin is used to configure the width of memory connected to $\overline{\text{CS0}}$.

BUSW0 configuration input is sampled on the rising edge of Reset Output ($\overline{\text{RSTO}}$).

19.15.5 Synchronous Peripheral Chip Select 1 (QSPI_CS1/PA11)

See Section 19.16.1.9, “QSPI Chip Select 1 (QSPI_CS1/PA11).”

QSPI_CS1 can be programmed to be active high or low.

19.15.6 Synchronous Peripheral Chip Select 2 (QSPI_CS2/$\overline{\text{URT1_CTS}}$)

See Section 19.16.1.5, “UART1 CTS (URT1_CTS/QSPI_CS2).”

19.15.7 Synchronous Peripheral Chip Select 3 (PA7/DOUT3/QSPI_CS3)

See Section 19.16.3.3, “QSPI_CS3, Port 3 GCI/IDL Data Out 3, PA7 (PA7/DOUT3/QSPI_CS3).” See description for GPIO ports.

19.16 Physical Layer Interface Controller TDM Ports and UART 1

The MCF5272 has four dedicated physical layer interface ports for connecting to external ISDN transceivers, CODECs and other peripherals. There are three sets of pins for these interfaces. Port 0 has its own dedicated set of pins. Ports 1, 2, and 3 share a set of pins. Port 3 can also be configured to use a dedicated pin set. Ports 1, 2, and 3 always share the same data clock (DCL).

19.16.1 GCI/IDL TDM Port 0.

This section describes signals used by the PLIC module port 0 interface.

19.16.1.1 Frame Sync (FSR0/FSC0/PA8)

IDL mode: FSR0 is an input for the 8-KHz frame sync for port 0.

GCI mode: FSC0 is an input for the 8-KHz frame sync for port 0. It is active high in this mode. Normally the GCI FSC signal is two clocks wide and is aligned with the first B-channel bit of the GCI frame. Many U-interface devices including the MC145572 and MC145576 change the width of FSC to one clock every 12 mS. This indicates U-interface super frame boundary.

Port A mode: This pin can be independently configured as PA8.

19.16.1.2 D-Channel Grant (DGNT0/PA9)

IDL mode: This pin can be independently configured as the input, DGNT0, used by a layer-one ISDN S/T transceiver to indicate that D-channel access has been granted.

Port A mode: This pin can be independently configured as I/O pin PA9.

19.16.1.3 Data Clock (DCL0/URT1_CLK)

IDL mode: This pin is the clock used to clock data in and out of DIN0 and DOUT0 for IDL port 0. Data is clocked into DIN0 on the falling edge and clocked out of DOUT0 on the rising edge of DCL0.

GCI mode: This pin is used to clock data in and out of DIN0 and DOUT0 for GCI port 0. DCL0 is twice the bit rate (two clocks per data bit).

UART1: URT1_CLK provides a clock input which can be the baud rate clock.

19.16.1.4 Serial Data Input (DIN0/URT1_RxD)

IDL mode: The DIN0 input is for clocking data into IDL port 0. Data is clocked into DIN0 on the falling edge of DCL0.

GCI mode: The DIN0 input is for clocking data into GCI port 0. DCL0 is twice the bit rate (two clocks per data bit).

UART1: URT1_RxD is the receiver serial data input for the UART1 module. Data received on this pin is sampled on the rising edge of the serial clock source with the least significant bit first. When the UART1 clock is stopped for power-down mode, any transition on this pin restarts it.

19.16.1.5 UART1 CTS ($\overline{\text{URT1_CTS}}$/QSPI_CS2)

UART1: $\overline{\text{URT1_CTS}}$ is the clear-to-send input indicating to the UART1 module that it can begin data transmission.

QSPI mode: This output pin provides a QSPI peripheral chip select, QSPI_CS2, when in Master mode. QSPI_CS2 can be programmed to be active high or low.

19.16.1.6 UART1 RTS ($\overline{\text{URT1_RTS}}$/$\overline{\text{INT5}}$)

Interrupt mode: This pin can be used as $\overline{\text{INT5}}$.

UART1: The $\overline{\text{URT1_RTS}}$ output is an automatic request to send output from the UART1 module. It can be configured to be asserted and negated as a function of the RxFIFO level.

19.16.1.7 Serial Data Output (DOUT0/URT1_TxD)

IDL mode: The DOUT0 output is for clocking data out of IDL port 0. Data is clocked out of DOUT0 on the rising edge of DCL0.

GCI mode: The DOUT0 output is for clocking data out of GCI port 0. DCL0 is twice the bit rate (two clocks per data bit).

UART1: URT1_TxD is the transmitter serial data output for the UART1 module. The output is held high ('mark' condition) when the transmitter is disabled, idle, or operating in the local loop back mode. Data is shifted out, least significant bit first, on this pin at the falling edge of the serial clock source.

19.16.1.8 D-Channel Request(DREQ0/PA10)

IDL mode: This pin can be independently configured as the DREQ0 output for signaling to a layer-1 S/T transceiver that a frame of data is ready to be sent on the port 0 D channel.

Port A mode: In GCI or IDL modes this pin can be independently configured as PA10.

19.16.1.9 QSPI Chip Select 1 (QSPI_CS1/PA11)

QSPI mode: QSPI_CS1 is a QSPI peripheral chip select.

Port A mode: In GCI or IDL modes this pin can be independently configured as PA11.

19.16.2 GCI/IDL TDM Port 1

Physical Layer Interface port 1 is an additional GCI/IDL port. Also internally connected to these pins are GCI/IDL serial ports 2 and 3.

19.16.2.1 GCI/IDL Data Clock (DCL1/GDCL1_OUT)

IDL mode: DCL1 is the data clock used to clock data in and out of the DIN1 and DOUT1 pins for IDL port 1. Data is clocked in to DIN1 on the falling edge of DCL1. Data is clocked out of DOUT1 on the rising edge of DCL1.

GCI mode: GDCL1_OUT is used to clock data in and out of DIN1 and DOUT1 for GCI port 1. DCL1 is twice the bit rate; that is, two clocks per data bit.

When this pin is configured as an output, the GDCL1_OUT clock signal from the on-chip synthesizer clock generator is output on this pin. Also GDCL1_OUT is used to internally drive all ports and delayed sync generators associated with ports 1, 2, and 3.

19.16.2.2 GCI/IDL Data Out (DOUT1)

IDL mode: The DOUT1 output is for clocking data out of IDL port 1. Data is clocked out of DOUT1 on the rising edge of DCL1. DOUT1 is also used for clocking data from ports 2 and 3.

GCI mode: The DOUT1 output is for clocking data out of GCI port 1. DCL1 is twice the bit rate, that is, two clocks per data bit.

19.16.2.3 GCI/IDL Data In (DIN1)

IDL mode: The DIN1 input is for clocking data into IDL port 1. Data is clocked into DIN1 on the falling edge of DCL1. DIN1 is also used for clocking data into ports 2 and 3.

GCI mode: The DIN1 input is for clocking data into GCI port 1. DCL1 is twice the bit rate, that is, two clocks per data bit. DIN1 is also used for clocking data into ports 2 and 3.

19.16.2.4 GCI/IDL Frame Sync (FSC1/FSR1/DFSC1)

IDL mode: FSR1 is an input for the 8-KHz frame sync for port 1.

GCI mode: FSC1 is an input for the 8-KHz frame sync for port 1. Normally the GCI FSC signal is two clocks wide and is aligned with the first B channel bit of the GCI frame. Many U-interface devices including the MC145572 and MC145576 change the width of FSC to one clock every 12 mS, indicating a U-interface super frame boundary. The MCF5272 can accept either frame sync width.

When this pin is configured as an output, the DFSC1 sync signal from the on-chip clock synthesizer is output on this pin. Also DFSC1 is used to internally drive the port 1 frame sync and the delayed sync generators associated with ports 2 and 3. The width of DFSC1 can be configured for 1, 2, 8, or 16 DCL clocks duration. The location of DFSC1 is programmable in single clock increments up to a maximum count of 0x3FF.

19.16.2.5 D-Channel Request (DREQ1/PA14)

IDL mode: This pin can be configured as the DREQ1 output in IDL mode for signalling to a layer 1 S/T transceiver that a frame of data is ready to be sent on the port 1 D channel.

Port A mode: I/O pin PA14.

19.16.2.6 D-Channel Grant ($\overline{\text{DGNT1_INT6}}$/$\overline{\text{PA15_INT6}}$)

This pin can be independently configured as the input, DGNT1, used by a Layer one ISDN S/T transceiver to indicate that D-channel access has been granted.

Port A mode: I/O pin PA15.

Special interrupt mode: The $\overline{\text{INT6}}$ interrupt can be enabled independently of the pin being configured for DGNT1 or PA15. This is particularly useful when configured for PA15 operation because $\overline{\text{INT6}}$ can be used to signal a change of data on the PAx pins.

19.16.3 GCI/IDL TDM Ports 2 and 3

Physical Layer Interface port 2 is an additional GCI/IDL port. This Physical Layer Interface shares the DIN1, DOUT1, and DCL1 pins of Physical Layer Interface port 1. The operating mode is selected by the same register control bit that selects the operating mode for port 1.

Physical Layer Interface port 3 is an additional GCI/IDL port. This Physical Layer Interface shares the DIN1, DOUT1, and DCL1 pins of Physical Layer Interface port 1. The operating mode is selected by the same register control bit that selects the operating mode for port 1.

Port 3 can also have its input and output signals redirected to DIN3 and DOUT3 respectively.

19.16.3.1 GCI/IDL Delayed Frame Sync 2 (DFSC2/PA12)

IDL/GCI Modes: DFSC2 is used as a programmable delayed frame sync for external IDL/GCI devices that use port 2 but are connected to the port 1 data pins. Port 2 uses the DFSC2 frame sync internally to ensure alignment with external devices synchronized with DFSC2. The width of this signal can be configured for 1, 2, 8, or 16 DCL clocks duration. The location of this frame sync is programmable in single clock increments up to a maximum count of 0x3FF.

Port A mode: I/O pin PA12.

19.16.3.2 GCI/IDL Delayed Frame Sync 3 (DFSC3/PA13)

Output pin DFSC3. This active high signal is used as a programmable delayed frame sync for external IDL/GCI devices that use port 3 but are connected to the port 1 or port 3 data pins. Port 3 uses the DFSC3 frame sync internally to ensure alignment with external devices synchronized with DFSC3. The width of this signal can be configured for 1, 2, 8, or 16 DCL clocks duration. The location of this frame sync is programmable in single clock increments up to a maximum count of 0x3FF.

Port A mode: I/O pin PA13.

19.16.3.3 QSPI_CS3, Port 3 GCI/IDL Data Out 3, PA7 (PA7/DOUT3/QSPI_CS3)

QSPI mode: The QSPI chip select, QSPI_CS3, is the default configuration after device reset. QSPI_CS3 can be programmed to be active high or low.

IDL mode: This pin can be configured as a dedicated output for clocking data out of IDL port 3. Data is clocked out of DOUT3 on the rising edge of DCL1. After device reset port 3 is connected to DOUT1 by setting a bit in the PLIC module configuration register, this pin can be configured as a dedicated output for IDL/GCI port 3.

GCI mode: This pin can be configured as a dedicated output for clocking data out of GCI port 3. Data is clocked out of DOUT3 on the rising edge of DCL1. DCL1 is twice the bit rate, that is, two clocks per data bit. This is done by setting a bit in the PLIC module configuration register this pin can be configured as a dedicated output for IDL/GCI port 3.

Port A mode: I/O pin PA7.

19.16.3.4 $\overline{\text{INT4}}$ and Port 3 GCI/IDL Data In ($\overline{\text{INT4}}$/DIN3)

IDL mode: This pin can be configured as a dedicated input, DIN3, for clocking data into IDL port 3. Data is clocked into DIN3 on the falling edge of DCL1. Data is clocked into DIN3 on the falling edge of DCL1. This is done by setting a bit in the PLIC module configuration register. Note that the appropriate bits must be set in the pin configuration register to reassign this pin from the interrupt module to the PLIC module.

GCI mode: This pin can be configured as a dedicated input, DIN3, for clocking data into GCI port 3. DCL1 is twice the bit rate, that is, two clocks per data bit. This is done by setting a bit in the PLIC module configuration register. Note that the appropriate bits must be set in the pin configuration register to reassign this spin from the interrupt module to the PLIC module.

Interrupt mode: This signal can be configured as interrupt input 4.

19.17 JTAG Test Access Port and BDM Debug Port

The MCF5272 supports the Freescale background debug mode (BDM) for ColdFire processors. It also supports a JTAG test interface.

The following signals do not support JTAG due to the critical timing required to support SDRAM memory: $\overline{\text{BS}}$[3:0], $\overline{\text{RAS0}}$, $\overline{\text{CAS0}}$, SDCLK, SDCLKE, $\overline{\text{SDRAMCS}}$/$\overline{\text{CS7}}$, $\overline{\text{SDWE}}$, A10_PRECHG, SDBA[1:0], D[31:0], A[15:0].

19.17.1 Test Clock (TCK/PSTCLK)

JTAG mode: TCK is the dedicated JTAG test logic clock, independent of the CPU system clock. This input provides a clock for on-board test logic defined by the IEEE 1149.1 standard.

TCK should be grounded if the JTAG port is not used and MTMOD is tied low.

BDM mode: PSTCLK is an output at the same frequency as the CPU clock. It is used for indicating valid processor status data on the PST and DDATA pins.

19.17.2 Test Mode Select and Force Breakpoint (TMS/$\overline{\text{BKPT}}$)

JTAG mode: The TMS input controls test mode operations for on-board test logic defined by the IEEE 1149.1 standard. Connecting TMS to VDD disables the test controller, making all JTAG circuits transparent to the system.

BDM mode: The hardware breakpoint input, $\overline{\text{BKPT}}$, requires a 10-K¾ pullup resistor.

19.17.3 Test and Debug Data Out (TDO/DSO)

JTAG mode: The TDO output is for shifting data out of the serial data port logic. Shifting out of data depends on the state of the JTAG controller state machine and the instructions currently in the instruction register. This data shift occurs on the falling edge of TCK. When TDO is not outputting data it is placed in a high-impedance state. TDO can also be three-stated to allow bussed or parallel connections to other devices having JTAG test access ports.

BDM mode: DSO is the debug data output.

19.17.4 Test and Debug Data In (TDI/DSI)

JTAG mode: The TDI input is for loading the serial data port shift registers (boundary scan registers, bypass register and instruction register). Shifting in of data depends on the state of the JTAG controller state machine and the instruction currently in the instruction register. Data is shifted in on the rising edge of TCK.

BDM mode: DSI is the debug serial data input. This signal requires a 10-K¾ pullup resistor.

19.17.5 JTAG $\overline{\text{TRST}}$ and BDM Data Clock ($\overline{\text{TRST}}$/DSCLK)

JTAG mode: $\overline{\text{TRST}}$ asynchronously resets the JTAG TAP logic when low.

BDM mode: DSCLK is the BDM serial data clock input. It requires a 10-K¾ pullup resistor.

19.17.6 Freescale Test Mode Select (MTMOD)

MTMOD: When the MTMOD input is low, JTAG mode is enabled. When it is high, BDM mode is enabled.

19.17.7 Debug Transfer Error Acknowledge ($\overline{\text{TEA}}$)

An external slave asserts the $\overline{\text{TEA}}$ input to indicate an error condition for the current bus transfer. It is provided to allow full debug port capability. The assertion of $\overline{\text{TEA}}$ causes the MCF5272 to abort the current bus cycle. If a 10-K¾ pullup resistor is not connected, external logic must drive $\overline{\text{TEA}}$ high when it is inactive. $\overline{\text{TEA}}$ has no effect during SDRAM accesses. If high parasitic capacitance occurs on the printed circuit board, a lower value pullup resistor may be needed.

19.17.8 Processor Status Outputs (PST[3:0])

PST[3:0] outputs indicate core status, as shown in Table 19-7. Debug mode timing is synchronous with the processor clock; status is unrelated to the current bus transfer.

Table 19-7. Processor Status Encoding

PST[3:0]	Definition
0000	Continue execution
0001	Begin execution of an instruction
0010	Begin execution of PULSE instruction or WDDATA.
0011	Entry into user mode
0100	Begin execution of PULSE instruction
0101	Begin execution of taken branch
0110	Reserved
0111	Begin execution of RTE instruction
1000	Begin 1 byte transfer on DDATA
1001	Begin 2 byte transfer on DDATA
1010	Begin 3 byte transfer on DDATA
1011	Begin 4 byte transfer on DDATA
1100 [1]	Exception processing
1101 [1]	Emulator mode entry exception processing
1110 [1]	Processor is stopped, waiting for an interrupt
1111 [1]	Processor is halted

[1] These encodings are asserted for multiple cycles.

19.17.9 Debug Data (DDATA[3:0])

Debug data signals (DDATA[3:0]) display captured processor data and breakpoint status.

19.17.10 Device Test Enable ($\overline{\text{TEST}}$)

$\overline{\text{TEST}}$ is used to put the device into various manufacturing test modes. It should be tied to VDD for normal operation.

19.18 Operating Mode Configuration Pins

The MCF5272 has four mode-select signals, some of which are shared with output signals used during normal device operation. These signals are HI-Z, QSPI_Dout/WSEL, QSPI_CLK/BUSW1, and QSPI_CS0/BUSW0. BYPASS is a Freescale test mode signal and should never have a pull-down resistor. The remaining three mode-select signals must each have a 4.7-K¾ pull-up or pull-down resistor. These signals are sampled on the rising edge of Reset Output ($\overline{\text{RSTO}}$).

Table 19-8. MCF5272 Bus Width Selection

WSEL	Data Bus Width
0	32 bits
1	16 Bits

Table 19-9. MCF5272 $\overline{CS0}$ Memory Bus Width Selection

BUSW1	BUSW0	$\overline{CS0}$ Bus Width
0	0	32 bits
0	1	8 bits
1	0	16 bits
1	1	Reserved, do not use.

Table 19-10. MCF5272 High Impedance Mode Selection

HI-Z	Data Bus Width
0	Enable HI-Z mode, all pins are high impedance
1	Normal operation

19.19 Power Supply Pins

The VDD/GND pins are connected to 3.3 V supply and associated ground. When the on-chip USB transceiver is used, the USB_VDD and USB_GND pins are connected to the 3.3 V device supply and associated ground. When the on-chip USB transceiver is not used, USB_GND should be connected to the device GND and USB_VDD left unconnected. Refer to Section 12.2.1.1 USB Transceiver Interface.

Chapter 20
Bus Operation

The MCF5272 bus interface supports synchronous data transfers that can be terminated synchronously or asynchronously and also can be burst or burst-inhibited between the MCF5272 and other devices in the system. This chapter describes the functioning of the bus for data-transfer operations, error conditions, bus arbitration, and reset operations. It includes detailed timing diagrams showing signal interaction. Refer also to Figure 19-1 for an overview of how the signals interact with each module of the MCF5272.

Operation of the bus is defined for transfers initiated by the MCF5272 as a bus master. The MCF5272 does not support external bus masters. The MCF5272 has three on-chip bus masters—the CPU, the Ethernet controller, and the memory-to-memory DMA controller.

20.1 Features

The following list summarizes the key bus operation features:

- 23 bits of address and 32 bits of data
- Device physical data bus width configurable for 16 or 32 bits
- Accesses 8-, 16-, and 32-bit port sizes
- Generates byte, word, longword, and line size transfers
- Burst and burst-inhibited transfer support
- Internal termination generation

20.2 Bus and Control Signals

Table 20-1 summarizes MCF5272 bus signals described in Chapter 19, “Signal Descriptions.”

Table 20-1. ColdFire Bus Signal Summary

Signal Name	Description	I/O
A[22:0]	Address bus	O
BS[3:0]	Byte strobes	O
$\overline{\text{CS}}$[7:0]	Chip selects	O
D[31:0]	Data bus	I/O
$\overline{\text{INT}}$[6:1]	Interrupt request	I
$\overline{\text{OE}}$	Output enable	O
R/$\overline{\text{W}}$	Read/write	O
TA	Transfer acknowledge	I
TEA	Transfer error acknowledge	I

20.2.1 Address Bus (A[22:0])

These output signals provide the location of a bus transfer. The address can be external SRAM, ROM, FLASH, SDRAM, or peripherals.

NOTE

The ColdFire core outputs 32 bits of address to the internal bus controller. Of these 32 bits, only A[22:0] are output to pins on the MCF5272.

20.2.2 Data Bus (D[31:0])

These three-state bidirectional signals provide the general-purpose data path between the MCF5272 and all other devices. The data bus can transfer 8, 16, 32, or 128 bits of data per bus transfer. The MCF5272 can be configured for an external physical data bus of 32- or 16-bits width. When configured for 16-bit external data bus width, D[15:0] become GPIO port C. A write cycle drives all 32 or 16 bits of the data bus regardless of the chip select port width and operand size.

20.2.3 Read/Write (R/$\overline{W}$)

This output signal defines the data transfer direction for the current bus cycle. A high (logic one) level indicates a read cycle; a low (logic zero) level indicates a write cycle. During SDRAM bus cycles R/$\overline{W}$ is driven high. When the CPU is in SLEEP or STOP modes, this signal is driven high.

NOTE

Use the $\overline{OE}$ signal to control any external data bus transceivers. In systems containing numerous external peripherals, the chip selects should be used to qualify any external transceivers. This ensures the transceivers are active only when the desired peripheral is accessed. Using only the R/$\overline{W}$ signal to control an external transceiver may lead to data bus conflicts in some system architectures.

20.2.4 Transfer Acknowledge ($\overline{TA}$)

This active-low synchronous input signal indicates the successful completion of a requested data transfer operation. During MCF5272-initiated transfers, transfer acknowledge ($\overline{TA}$) is an asynchronous input signal from the referenced slave device indicating completion of the transfer.

The MCF5272 edge-detects and retimes the $\overline{TA}$ input. This means that an additional wait state may or may not be inserted. For example if the active chip select is used to immediately generate the $\overline{TA}$ input, one or two wait states may be inserted in the bus access.

The $\overline{TA}$ signal function is not available after reset. It must be enabled by configuring the appropriate pin configuration register bits along with the value of CSOR*n*[WS]. If $\overline{TA}$ is not used, it should either have a pullup resistor or be driven through gating logic that always ensures the input is inactive. $\overline{TA}$ should be negated on the negating edge of the active chip select.

$\overline{TA}$ must always be negated before it can be recognized as asserted again. If held asserted into the following bus cycle, it has no effect and does not terminate the bus cycle.

NOTE

For the MCF5272 to accept the transfer as successful with a transfer acknowledge, $\overline{TEA}$ must be negated throughout the transfer.

$\overline{TA}$ is not used for termination during SDRAM accesses.

20.2.5 Transfer Error Acknowledge ($\overline{TEA}$)

An external slave asserts this active-low input signal to abort a transfer. The assertion of $\overline{TEA}$ immediately aborts the bus cycle. The assertion of $\overline{TEA}$ has precedence over the assertion of $\overline{TA}$.

The MCF5272 edge-detects and retimes the $\overline{TEA}$ input. $\overline{TEA}$ is an asynchronous input signal.

The $\overline{TEA}$ signal function is available after reset. If $\overline{TEA}$ is not used, a pullup resistor or gating logic must be used to ensure the input is inactive. $\overline{TEA}$ should be negated on the negating edge of the active chip select. $\overline{TEA}$ must always be negated before it can be recognized as asserted again. If held asserted into the following bus cycle, it has no effect and does not abort the bus cycle.

$\overline{TEA}$ has no affect during SDRAM accesses.

20.3 Bus Exception: Double Bus Fault

When a bus error or an address error occurs during the exception processing sequence for a previous bus error, a previous address error, or a reset exception, the bus or address error causes a double bus fault. If the MCF5272 experiences a double bus fault, it enters the halted state. To exit the halt state, reset the MCF5272.

20.4 Bus Characteristics

The MCF5272 uses the address bus (A[22:0]) to specify the location for a data transfer and the data bus (D[31:0] or D[31:16]) to transfer the data. Control signals indicate the direction of the transfer. The selected device or the number of wait states programmed in the chip select base registers (CSBRs), the chip select option registers (CSORs), the SDRAM configuration and SDRAM timing registers (SDCR, SDTR) control the length of the cycle.

The MCF5272 clock is distributed internally to provide logic timing. All SRAM and ROM mode bus signals should be considered as asynchronous with respect to CLKIN. SDCR[INV] allows the SDRAM control signals to be asserted and negated synchronous with the rising or falling edge of SDCLK. The SDRAM control signals are $\overline{BS}$[3:0], SDBA[1:0], $\overline{RAS0}$, $\overline{CAS0}$, $\overline{SDWE}$, A10_PRECHG, SDCLKE, and $\overline{CS7}$/$\overline{SDCS}$.

The asynchronous $\overline{INT}$[6:1] signals are internally synchronized to resolve the input to a valid level before being used.

20.5 Data Transfer Mechanism

The MCF5272 supports byte, word, and longword operands and allows accesses to 8-, 16-, and 32-bit data ports. The MCF5272 supports port sizes of the specific memory, enables internal generation of transfer termination, and sets the number of wait states for the external slave being accessed by programming the CSBRs, CSORs, SDCR, and SDTR. For more information on programming these registers, refer to the SIM, chip select, and SDRAM controller chapters.

NOTE

The MCF5272 compares the address for the current bus transfer with the address and mask bits in the CSBRs and CSORs looking for a match. The priority is listed in Table 20-2 (from highest priority to lowest priority):

Table 20-2. Chip Select Memory Address Decoding Priority

Priority	Chip Select
Highest	Chip Select 0
	Chip Select 1
	Chip Select 2
	Chip Select 3
	Chip Select 4
	Chip Select 5
	Chip Select 6
Lowest	Chip Select 7

20.5.1 Bus Sizing

The MCF5272 can be configured for an external physical data bus width of 16 bits by pulling QSPI_Dout/WSEL high, or for 32 bits by pulling QSPI_Dout/WSEL low during reset. When the external physical address bus size is configured for 16 bits, the signals D[15:0] become general purpose I/O port C.

The MCF5272 determines the port size for each transfer from the CSBRs at the start of each bus cycle. This allows the MCF5272 to transfer operands from 8-, 16-, or 32-bit ports. The size of the transfer is adjusted to accommodate the port size indicated. A 32-bit port must reside on data bus bits D[31:0], a 16-bit port must reside on data bus bits D[31:16], and an 8-bit port must reside on data bus bits D[31:24]. This requirement ensures that the MCF5272 correctly transfers valid data to 8-, 16-, and 32-bit ports.

The bytes of operands are designated as shown in Figure 20-1. The most significant byte of a longword operand is OP0; OP3 is the least significant byte. The two bytes of a word length operand are OP2 (most significant) and OP3. The single byte of a byte length operand is OP3. These designations are used in the figures and descriptions that follow.

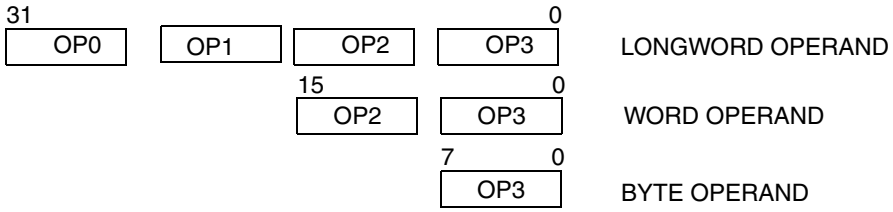

Figure 20-1. Internal Operand Representation

Figure 20-2 shows the required organization of data ports on the MCF5272 for 8-, 16-, and 32 bit devices. The four bytes shown are connected through the internal data bus and data multiplexer to the external data bus. This path is how the MCF5272 supports programmable port sizing and operand misalignment. The data multiplexer establishes the necessary connections for different combinations of address and data sizes.

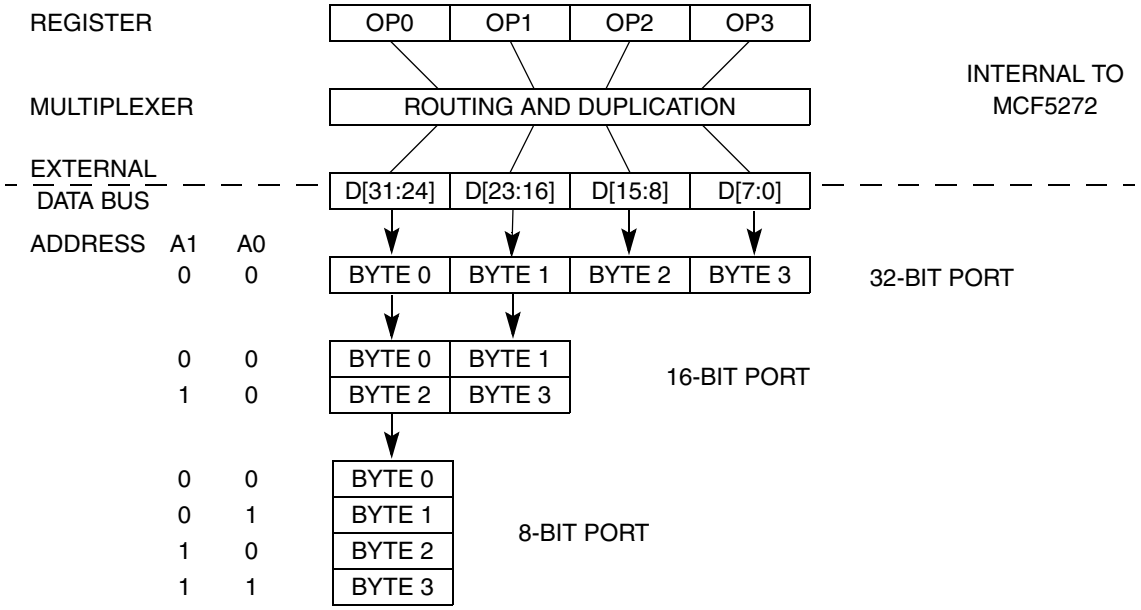

Figure 20-2. MCF5272 Interface to Various Port Sizes

The multiplexer takes the four bytes of the 32-bit bus and routes them to their required positions. For example, OP3 can be routed to D[7:0], as would be the normal case when interfacing to a 32-bit port. OP3 can be routed to D[23:16] for interfacing to a 16-bit port, or it can be routed to D[31:24] for interfacing to an 8-bit port. The operand size, address, and port size of the memory being accessed determines the positioning of bytes.

Table 20-3 through Table 20-5 describe data bus byte strobes. Note that most SDRAMs associate DQM3 with the MSB, thus $\overline{BS3}$ should be connected to the SDRAM's DQM3 input.

Table 20-3. Byte Strobe Operation for 32-Bit Data Bus

$\overline{BS3}$	$\overline{BS2}$	$\overline{BS1}$	$\overline{BS0}$	Access Type	Access Size	Data Located On
1	1	1	1	None	None	—
1	1	1	0	FLASH/SRAM	Byte	D[31:24]
1	1	0	1	FLASH/SRAM		D[23:16]
1	0	1	1	FLASH/SRAM		D[15:8]
0	1	1	1	FLASH/SRAM		D[7:0]
1	1	0	0	FLASH/SRAM	Word	D[31:16]
0	0	1	1	FLASH/SRAM		D[15:0]
0	0	0	0	FLASH/SRAM	Longword	D[31:0]
1	1	1	0	SDRAM	Byte	D[7:0]
1	1	0	1	SDRAM		D[15:8]
1	0	1	1	SDRAM		D[23:16]
0	1	1	1	SDRAM		D[31:24]
1	1	0	0	SDRAM	Word	D[15:0]
0	0	1	1	SDRAM		D[31:16]
0	0	0	0	SDRAM	Longword	D[31:0]

Table 20-4. Byte Strobe Operation for 16-Bit Data Bus—SRAM Cycles

BS1	BS0	Access Size	Data Located On
1	1	None	—
1	0	Byte	D[31:24]
0	1	Byte	D[23:16]
0	0	Word	D[31:16]

Table 20-5. Byte Strobe Operation for 16-Bit Data Bus—SDRAM Cycles

$\overline{BS3}$	$\overline{BS2}$	Access Type	Data Located On
1	1	None	—
1	0	Byte	D[23:16]
0	1	Byte	D[31:24]
0	0	Word	D[31:16]

Table 20-6 lists the bytes that should be driven on the data bus during read cycles by the external peripheral device being accessed, and the pattern of the data transfer for write cycles to the external data bus.

For read cycles, the entries shown as Byte X are portions of the requested operand that are read. The operand being read is defined by the size of the transfer and A[1:0] for the bus cycle. Bytes labeled “X” are don’t cares and are not required during that read cycle. Bytes labeled “–” are not valid transfers.

For write cycles from the internal multiplexer of the MCF5272 to the external data bus A[1:0] is incremented according to the transfer size. For example, if a longword transfer is generated to a 16-bit port, the MCF5272 starts the cycle with A[1:0] set to 0x0 and reads the first word. The address in then incremented to 0x2 and the second word is read. The data for both word reads is taken from D[31:16]. Bytes labeled “X” are don’t cares.

Table 20-6. Data Bus Requirement for Read/Write Cycles

Transfer Size	A[1:0]	External Data Bytes Required						
		32-Bit Port				16-Bit Port		8-Bit Port
		D[31:24]	D[23:16]	D[15:8]	D[7:0]	D[31:24]	D[23:16]	D[31:24]
Byte	00	Byte 0	X	X	X	Byte 0	X	Byte 0
	01	X	Byte 1	X	X	X	Byte 1	Byte 1
	10	X	X	Byte 2	X	Byte 2	X	Byte 2
	11	X	X	X	Byte 3	X	Byte 3	Byte 3
Word	00	Byte 0	Byte 1	X	X	Byte 0	Byte 1	Byte 0
	01	—	—	—	—	—	—	Byte 1
	10	X	X	Byte2	Byte 3	Byte 2	Byte 3	Byte 2
	11	—	—	—	—	—	—	Byte 3
Longword	00	Byte 0	Byte 1	Byte 2	Byte 3	Byte 0	Byte 1	Byte 0
	01	—	—	—	—	—	—	Byte 1
	10	—	—	—	—	Byte 2	Byte 3	Byte 2
	11	—	—	—	—	—	—	Byte 3
Line	00	Byte 0	Byte 1	Byte 2	Byte 3	Byte 0	Byte 1	Byte 0
	01	—	—	—	—	—	—	Byte 1
	10	—	—	—	—	Byte 2	Byte 3	Byte 2
	11	—	—	—	—	—	—	Byte 3

20.6 External Bus Interface Types

The MCF5272 supports three types of external bus interfaces. The interface type is programmed using CSBR*n*[EBI]. The EBI codes are summarized in Table 20-7.

Table 20-7. External Bus Interface Codes for CSBRs

A0	CSBR*n*[EBI]	Applicable Chip Select	Note
16-/32-bit SRAM/ROM	00	All	For 16/32 bit wide memory devices with byte strobe inputs. $\overline{BS}$[3:0] are byte read/write enables in this mode. CSBR0[EBI] = 00 at reset.
SDRAM	01	$\overline{CS7}$/$\overline{SDCS}$ only	One physical bank of SDRAM consisting of 16–256 Mbit devices. The $\overline{CS7}$/$\overline{SDCS}$ CSORn[WS] must be set to 0x1F.
Reserved	10	—	—
8-bit SRAM/ROM	11	All	SRAM/ROM timing for 8 bit wide memory devices without byte strobe inputs. $\overline{BS}$[3:0] function as byte write enables in this mode.

20.6.1 Interface for FLASH/SRAM Devices with Byte Strobes

CSBR*n*[EBI] is 00 for FLASH/SRAM devices and peripherals having 16- or 32-bit data bus widths. These memory devices have separate pins for independent byte strobes, write enable, chip select, and output enable. All chip selects support this EBI mode.

The number of wait states required for the external memory or peripheral is programmed through CSOR*n*[WS]. The external transfer acknowledge signal, $\overline{TA}$, is provided to allow off-chip control of wait states. External control of wait states is enabled when CSOR*n*[WS] is 0x1F. When $\overline{TA}$ is used to terminate the bus cycle, the bus cycle will have a minimum of one wait states. Additional wait states can be added by delaying the assertion of $\overline{TA}$.

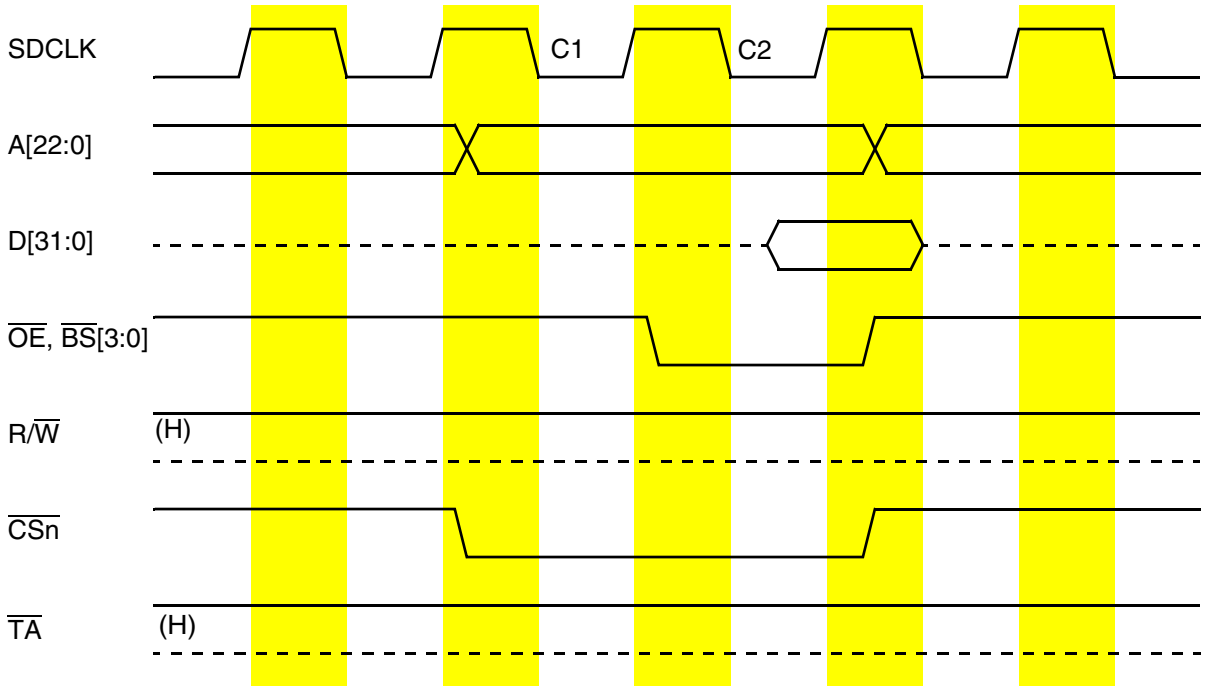

Figure 20-3. Longword Read; EBI = 00; 32-Bit Port; Internal Termination

NOTE

Wait states, if needed, are added immediately after C2 in Figure 20-3.

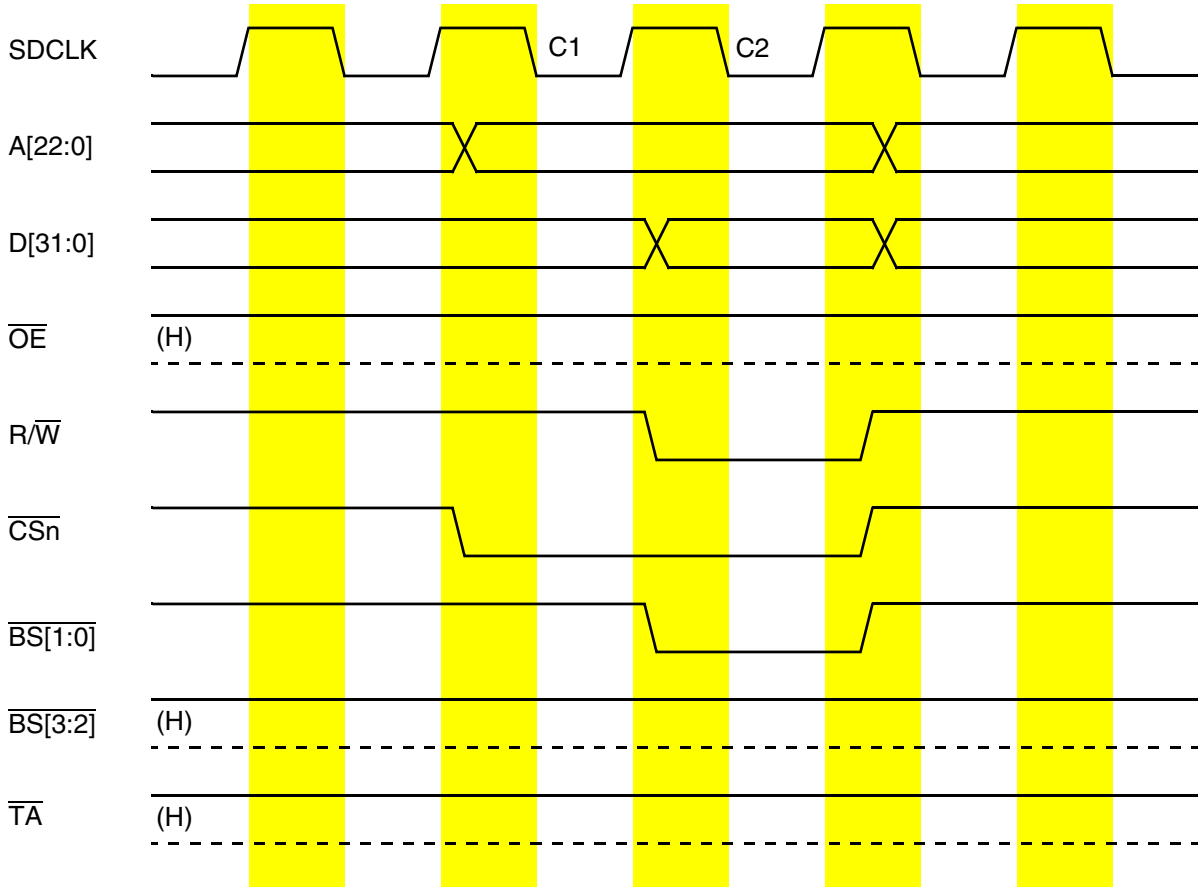

Figure 20-4. Word Write; EBI = 00; 16-/32-Bit Port; Internal Termination

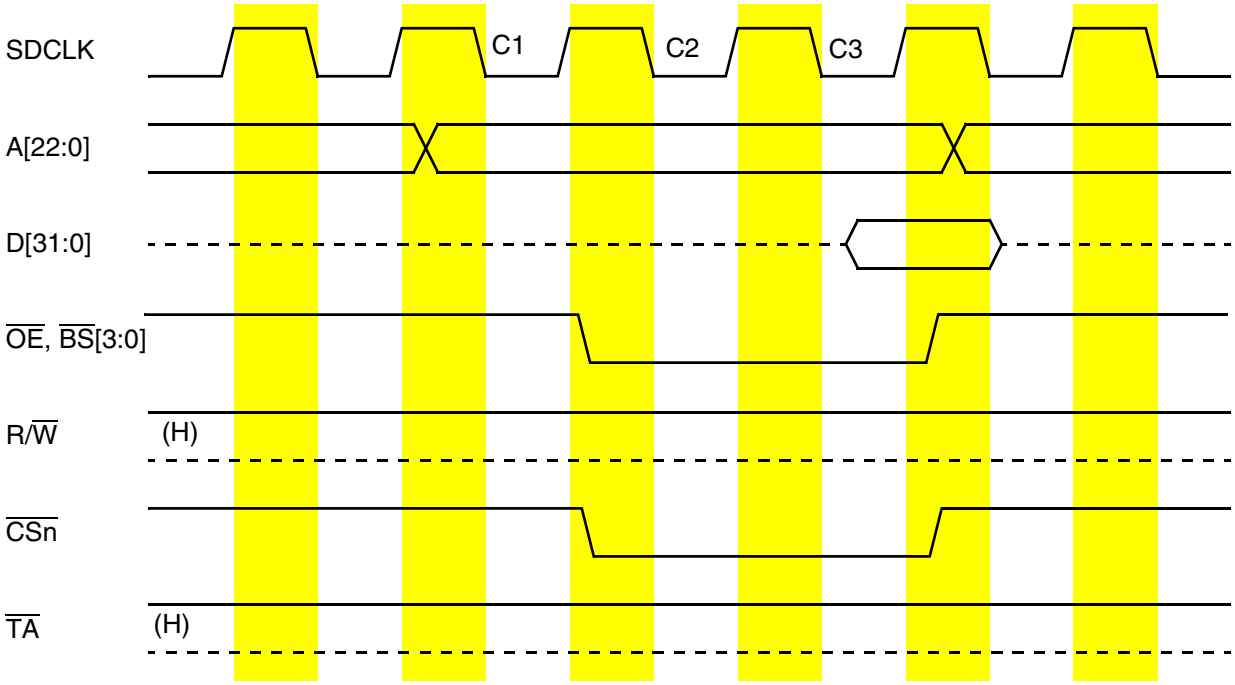

Figure 20-5. Longword Read with Address Setup; EBI = 00; 32-Bit Port; Internal Termination

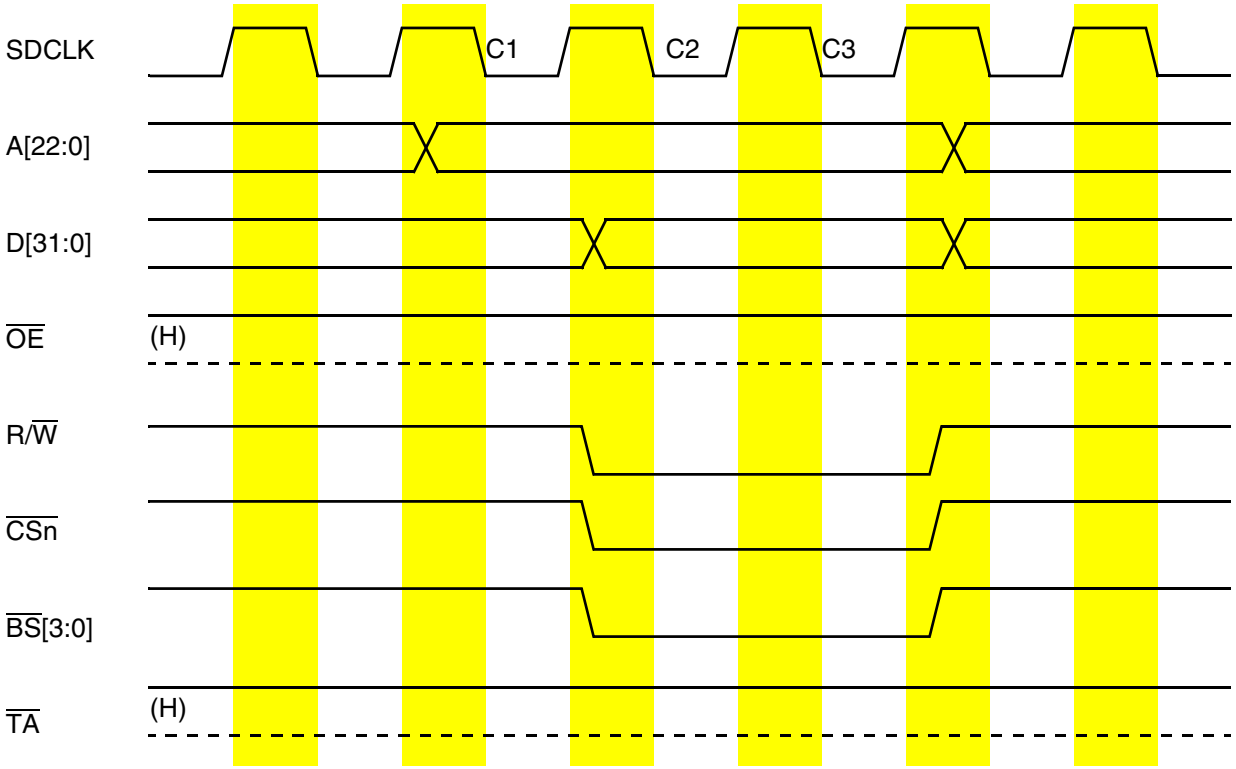

Figure 20-6. Longword Write with Address Setup; EBI = 00; 32-Bit Port; Internal Termination

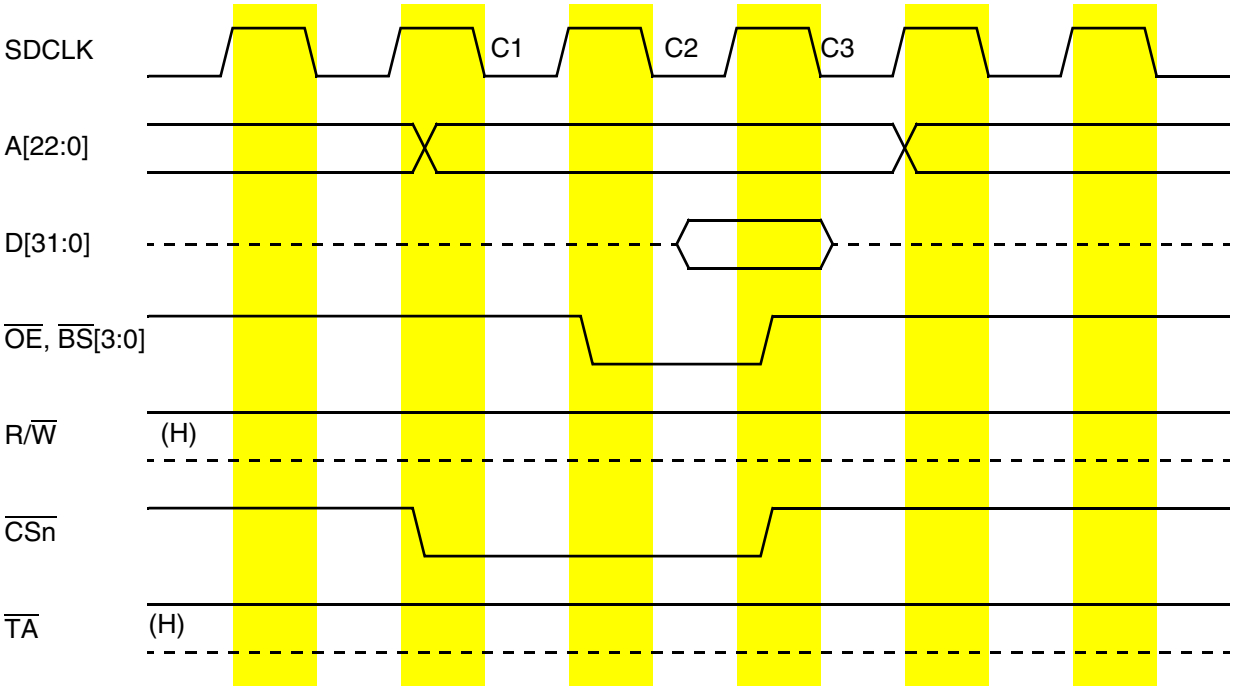

Figure 20-7. Longword Read with Address Hold; EBI = 00; 32-Bit Port; Internal Termination

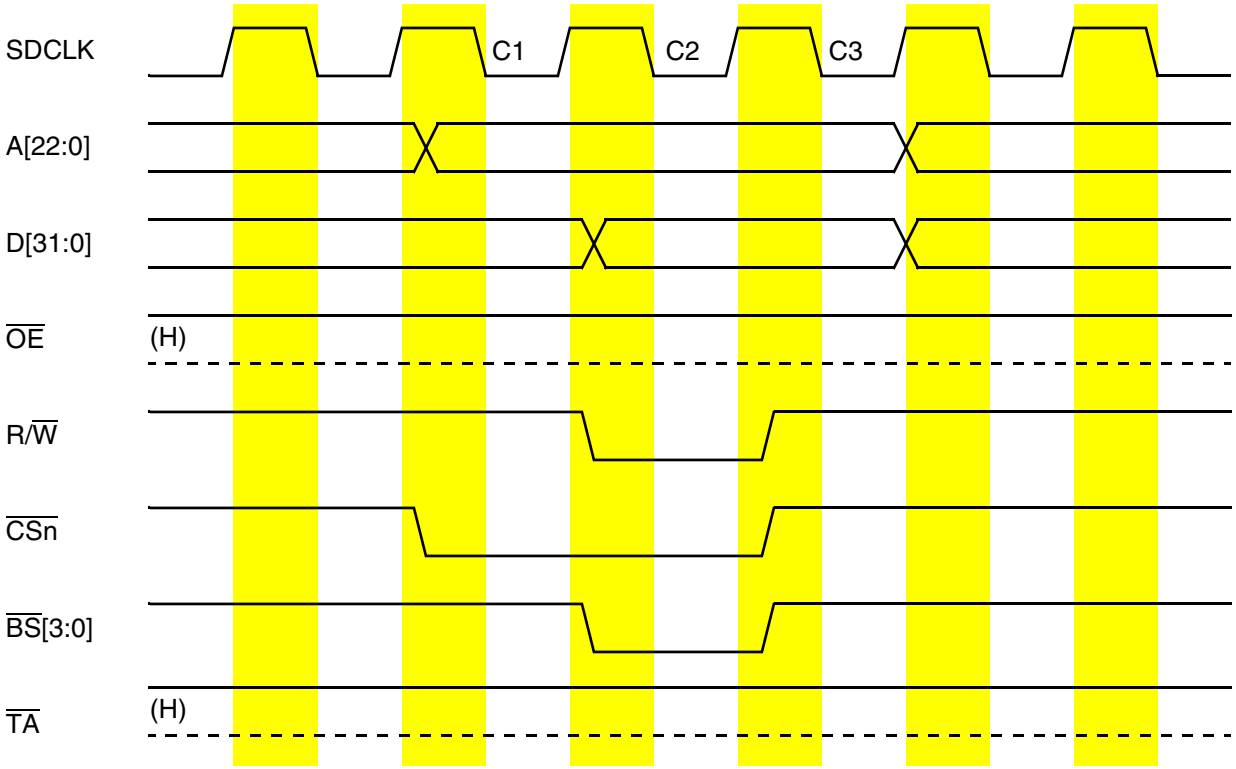

Figure 20-8. Longword Write with Address Hold; EBI = 00; 32-Bit Port; Internal Termination

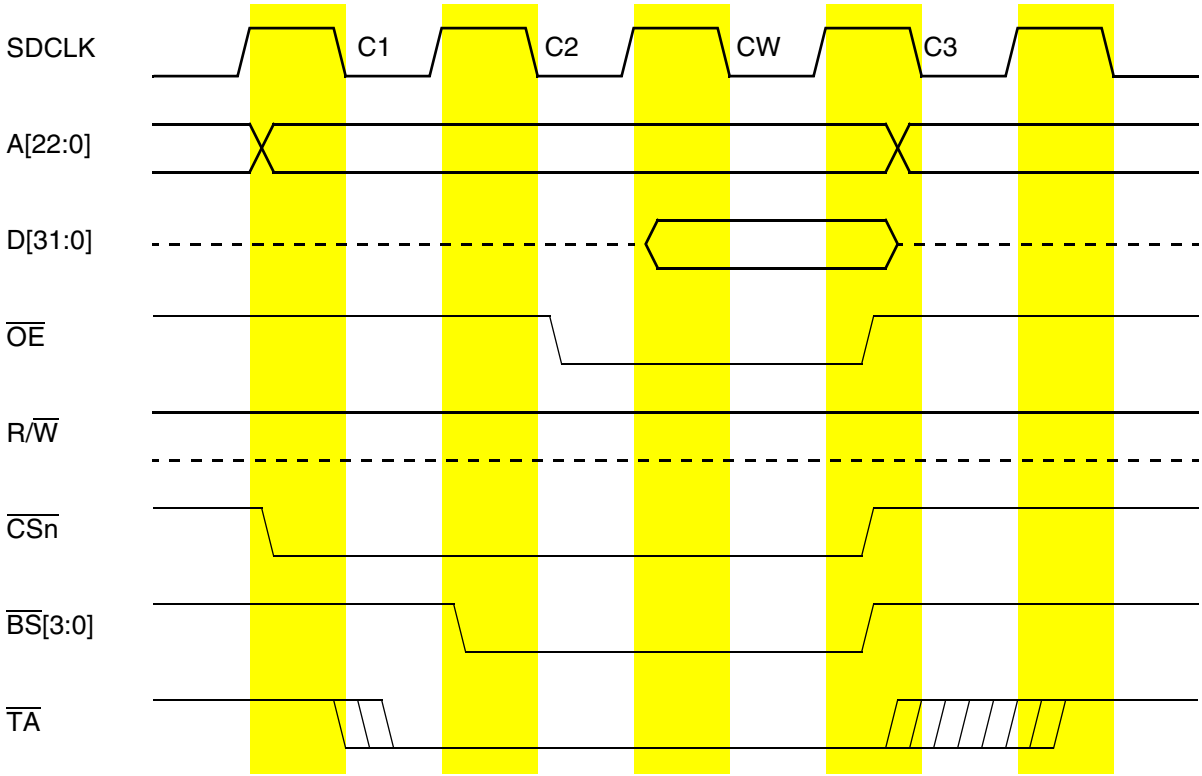

Figure 20-9. Longword Read; EBI = 00; 32-Bit Port; Terminated by TA with One Wait State

20.6.2 Interface for FLASH/SRAM Devices without Byte Strobes

CSBR*n*[EBI] is 11 for FLASH/SRAM devices and for peripherals having 8-bit data bus widths and no byte strobe inputs. These type of memory devices have separate pins for write enable, chip select, and output enable. All chip selects support this EBI mode.

The key difference between EBI = 11 and EBI = 00 is that $\overline{BS}$[3:0] can be directly connected to the R/$\overline{W}$ inputs of the 8-bit wide SRAM devices and the R/$\overline{W}$ output from the MCF5272 can be left unconnected.

The number of wait states required for the external memory or peripheral can be programmed in CSOR*n*[WS]. The external transfer acknowledge signal, $\overline{TA}$, is provided to allow off-chip control of wait states. External control of wait states is enabled when CSOR*n*[WS] is 0x1F.

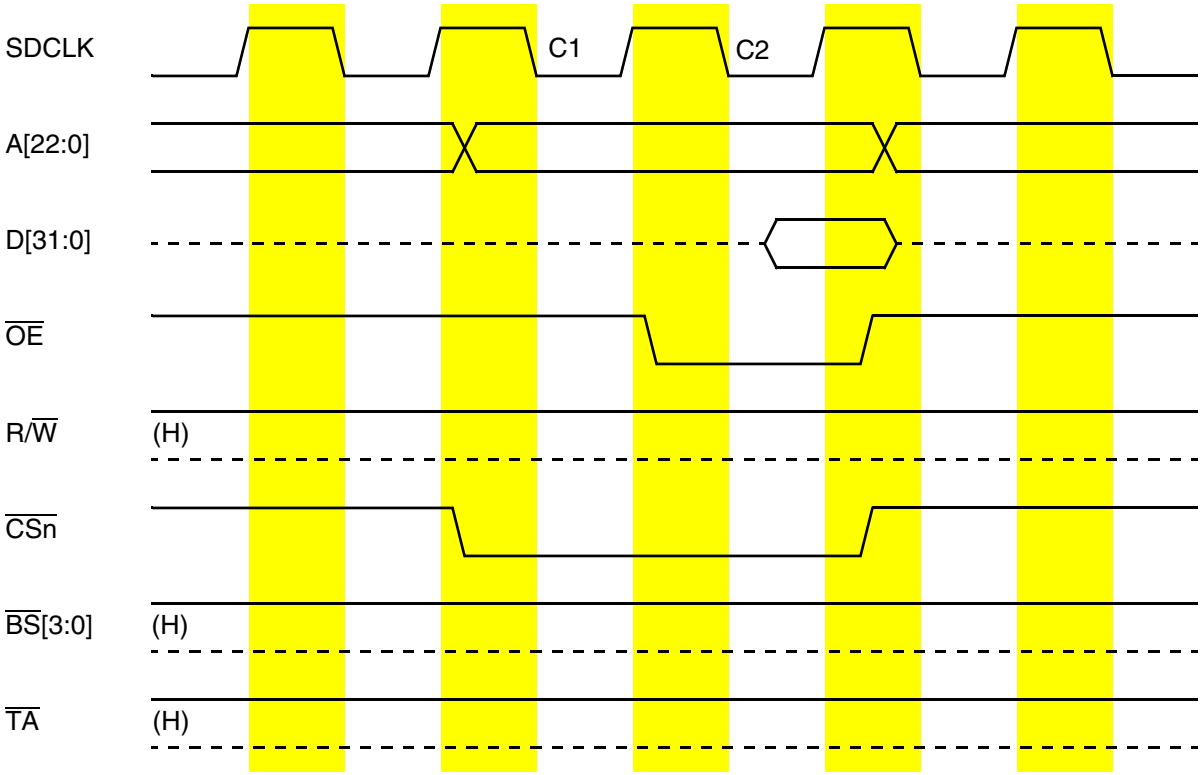

Figure 20-10. Longword Read; EBI=11; 32-Bit Port; Internal Termination

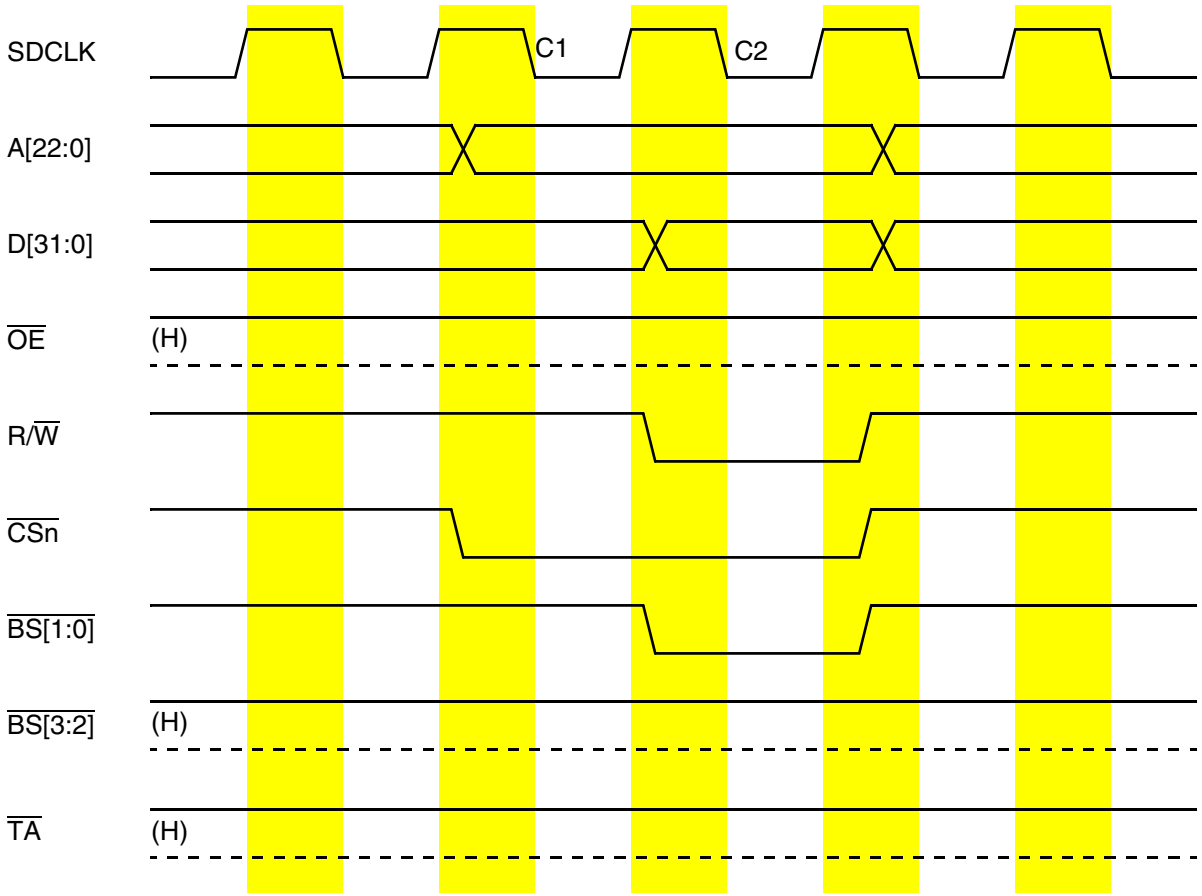

Figure 20-11. Word Write; EBI=11; 16/32-Bit Port; Internal Termination

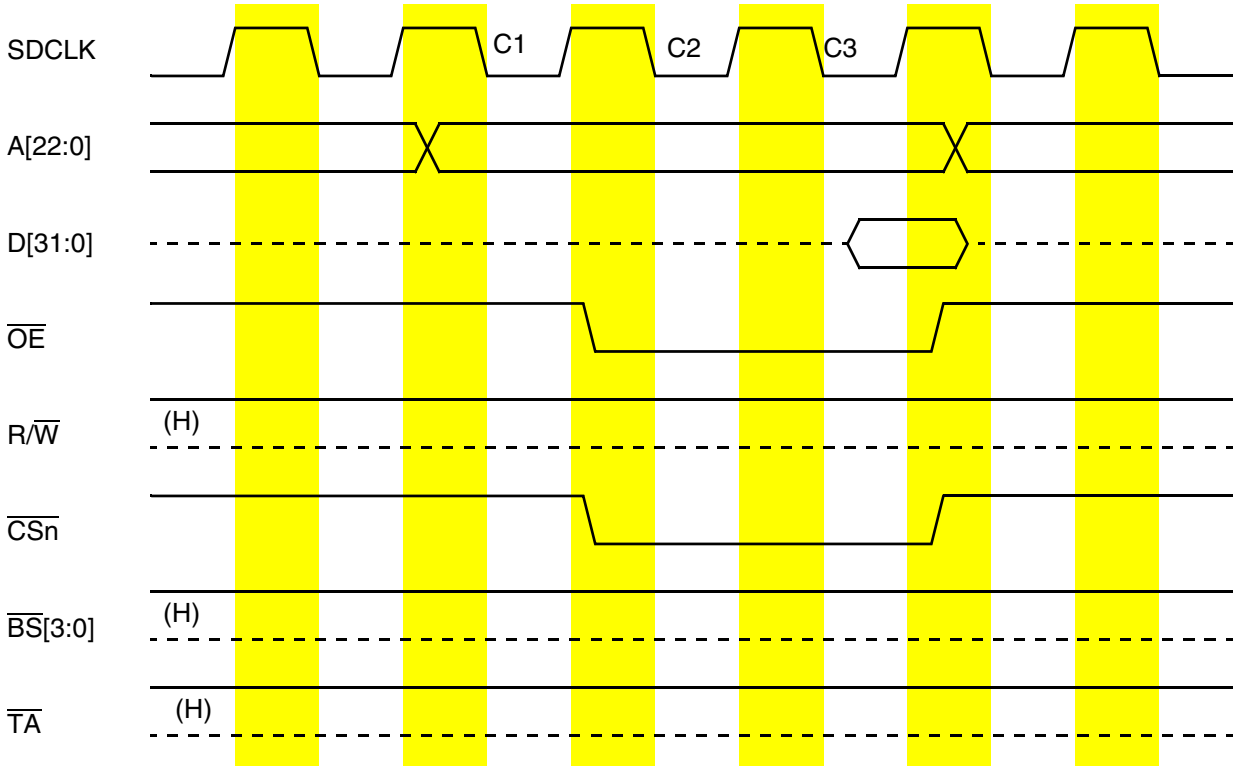

Figure 20-12. Read with Address Setup; EBI=11; 32-Bit Port; Internal Termination

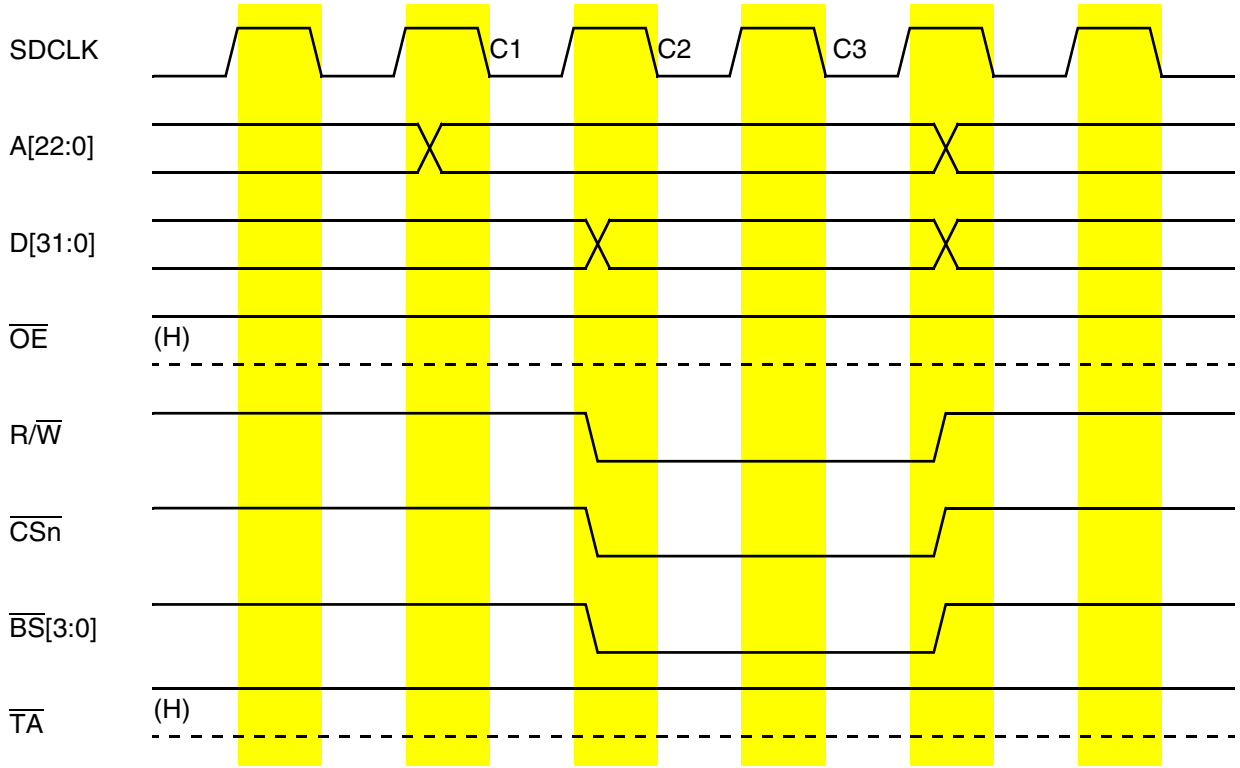

Figure 20-13. Longword Write with Address Setup; EBI=11; 32-Bit Port; Internal Termination

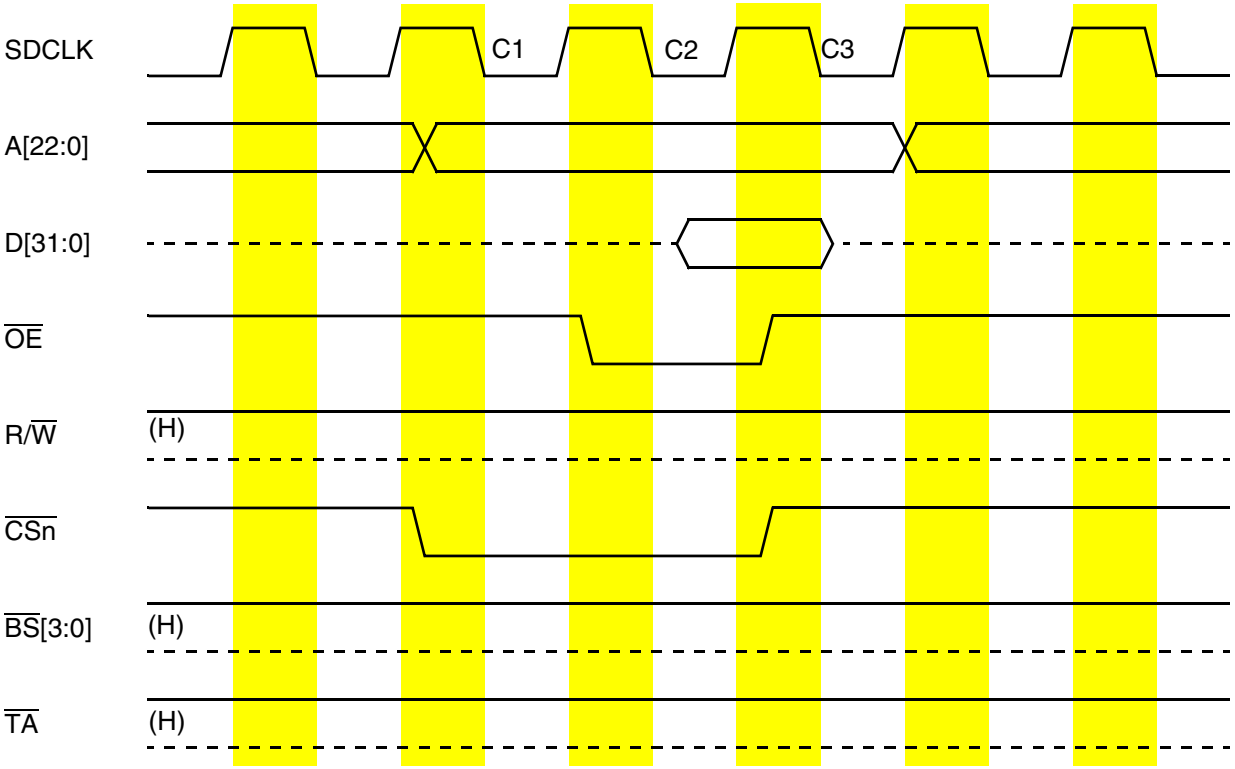

Figure 20-14. Read with Address Hold; EBI=11; 32-Bit Port; Internal Termination

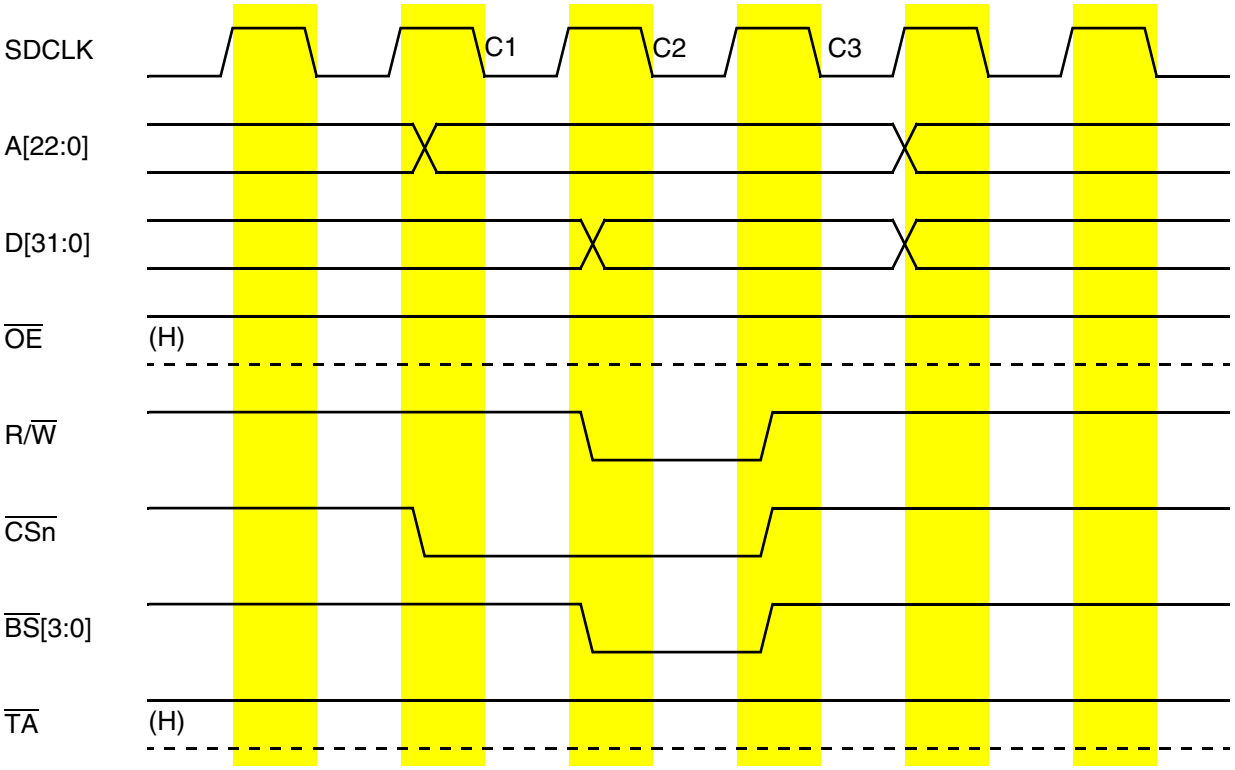

Figure 20-15. Longword Write with Address Hold; EBI=11; 32-Bit Port; Internal Termination

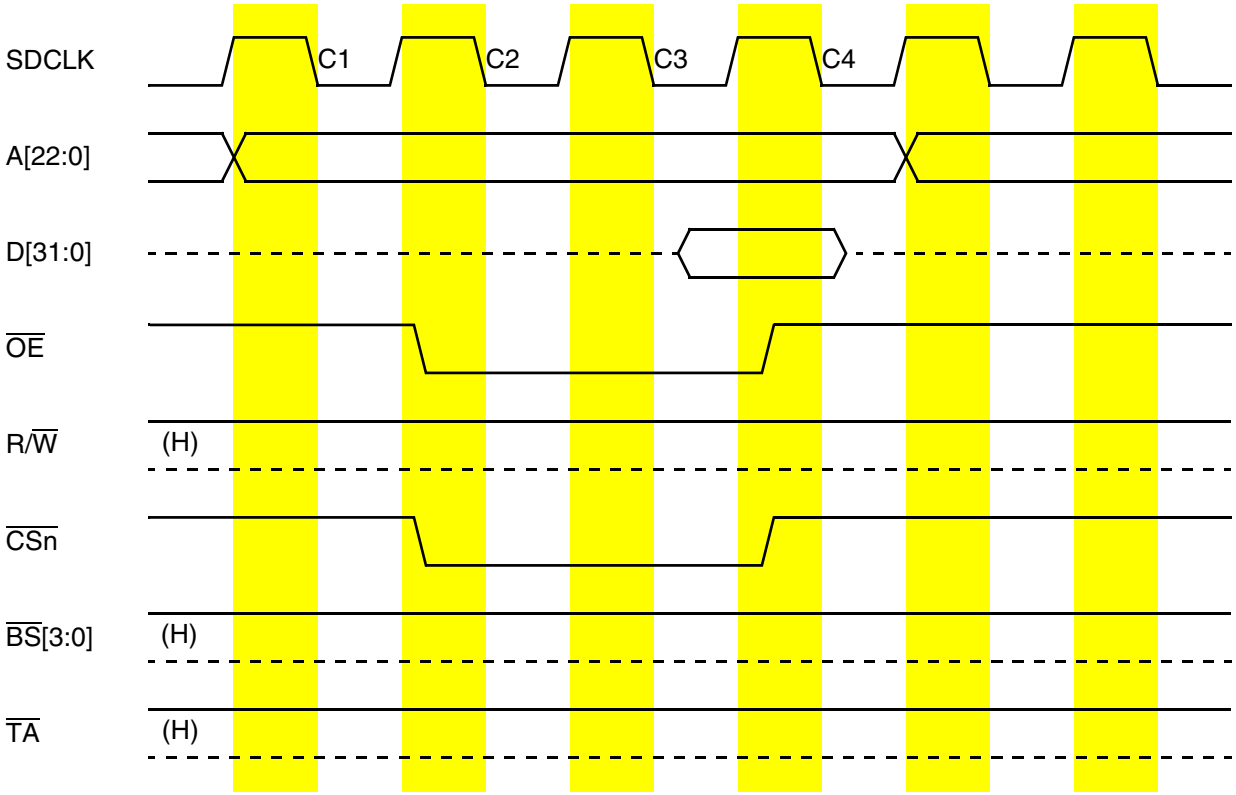

Figure 20-16. Longword Read with Address Setup and Address Hold; EBI = 11; 32-Bit Port, Internal Termination

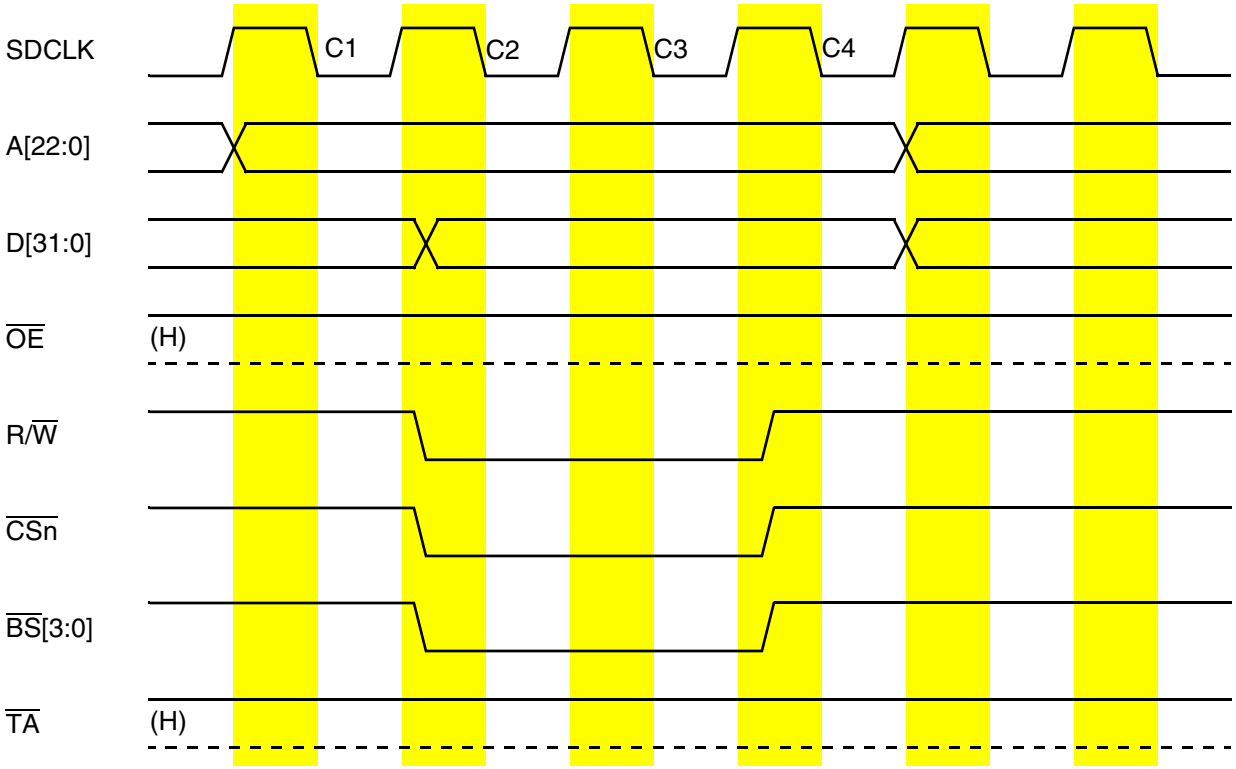

Figure 20-17. Longword Write with Address Setup and Address Hold; EBI = 11; 32-Bit Port, Internal Termination

20.7 Burst Data Transfers

The MCF5272 uses line read transfers to access 16 bytes to support cache line filling DMA transfers, and MOVEM instructions, when appropriate. A cache line read accesses a block of four longwords, aligned to a longword memory boundary, by supplying a starting address that points to one of the longwords and incrementing A[3:0] of the supplied address for each transfer. A longword read accesses a single longword aligned to a longword boundary and increments A1 and A0 if the accessed port size is smaller than 32 bits. A word read accesses a single word of data, aligned to a word boundary and increments A0 if the accessed port size is smaller than 16 bits.

The MCF5272 uses line write transfers to access a 16-byte operand for MOVEM instructions and DMA transfers, when appropriate. A line write accesses a block of four longwords, aligned to a longword memory boundary, by supplying a starting address that points to one of the longwords and increments A[3:0] of the supplied address for each transfer. A longword write accesses a single longword aligned to a longword boundary and increments A1 and A0 if the accessed port size is smaller than 32 bits. A word write accesses a single word of data, aligned to a word boundary and increments A0 if the accessed port size is smaller than 16 bits.

The MCF5272 hardware supports the following types of burst transfers.

- Sixteen byte cache line read bursts from 32-bit wide SDRAM with access times of *n*-1-1-1. The value of *n* depends on read, write, page miss, page hit, etc. See Chapter 9, “SDRAM Controller,”

for complete details of access times. To enable this type of transfer, CSOR7[EXTBURST] must be cleared, CSBR7[EBI] must be 01, and CSBR7[BW] must be 11.

- Sixteen byte cache line read bursts from 16-bit wide SDRAM with access times of n-1-1-1-1-1-1-1. CSOR7[EXTBURST] must be set, CSBR7[EBI] must be 01, and CSBR7[BW] must be 10.
- Sixteen byte read or write bursts during Ethernet DMA transfers to/from SDRAM with access times of n-1-1-1 or n-1-1-1-1-1-1-1 depending on 32 or 16 bit SDRAM port width as described in the previous two paragraphs.

All bursts to and from SRAM or from ROM appear as a sequence of four single longword accesses in the case of 32-bit wide memory. In the case of 16-bit wide SRAM or ROM memory, a burst appears as a sequence of eight single word accesses. In the case of 8 bit wide SRAM or ROM memory a burst appears as a sequence of sixteen single byte accesses. It is never necessary to set CSOR*n*[EXTBURST] when CSOR*n*[EBI] = 00 or 11. CSBR*n*[BW] = 11 is invalid for SRAM/ROM; it should be programmed with the port size.

20.8 Misaligned Operands

All MCF5272 data formats can be located in memory on any byte boundary. A byte operand is properly aligned at any address; a word operand is misaligned at an odd address; and a longword is misaligned at an address that is not evenly divisible by four. However, because operands can reside at any byte boundary, they can be misaligned.

Although the MCF5272 does not enforce any alignment restrictions for data operands (including program counter (PC) relative data addressing), significant performance degradation can occur when additional bus cycles are required for longword or word operands that are misaligned. For maximum performance, data items should be aligned on their natural boundaries. All instruction words and extension words must reside on word boundaries. An address error exception occurs with any attempt to prefetch an instruction word at an odd address.

The MCF5272 converts misaligned operand accesses to a sequence of aligned accesses. Figure 20-18 illustrates the transfer of a longword operand from a byte address to a 32-bit port, requiring more than one bus cycle. Figure 20-19 is similar to the example illustrated in Figure 20-18 except that the operand is word-sized and the transfer requires only two bus cycles.

	31 24	23 16	15 8	7 0	A[2:0]
Transfer 1	—	Byte 0	—	—	001
Transfer 2	—	—	Byte 1	Byte 2	010
Transfer 3	Byte 3	—	—	—	100

Figure 20-18. Example of a Misaligned Longword Transfer

	31 24	23 16	15 8	7 0	A[2:0]
Transfer 1	—	—	—	Byte 0	001
Transfer 2	Byte 1	—	—	—	100

Figure 20-19. Example of a Misaligned Word Transfer

20.9 Interrupt Cycles

All interrupt vectors are internally generated. The MCF5272 does not support external interrupt acknowledge cycles. The System Integration Module prioritizes all interrupt requests and issues the appropriate vector number in response to an interrupt acknowledge cycle. Refer to the System Integration chapter for details on the interrupt vectors and their priorities.

When an external peripheral device requires the services of the CPU, it can signal the ColdFire core to take an interrupt exception. The external peripheral devices use the interrupt request signals ($\overline{\text{INTx}}$) to signal an interrupt condition to the MCF5272. The interrupt exception transfers control to a routine that responds appropriately.

There are a total of six external interrupt inputs, $\overline{\text{INT}}$[6:1]. Depending on the pin configuration between three and six of these pins are available. Each interrupt input pin is dedicated to an external peripheral. It is possible to have multiple external peripherals share an $\overline{\text{INT}}x$ pin but software must then determine which peripheral caused the interrupt. The interrupt priority level and the signal level of each interrupt pin are individually programmable.

The MCF5272 continuously samples the external interrupt input signals and synchronizes and debounces these signals. An interrupt request must be held constant for at least two consecutive CLK periods to be considered a valid input. MCF5272 latches the interrupt and the interrupt controller responds as programmed. The interrupt service routine must clear the latch in the ICR registers.

NOTE

All internal interrupts are level sensitive only. External interrupts are edge-sensitive as programmed in the PITR. Interrupts must remain stable and held valid for two clock cycles while they are internally synchronized and latched.

The MCF5272 takes an interrupt exception for a pending interrupt within one instruction boundary after processing any other pending exception with a higher priority. Thus, the MCF5272 executes at least one instruction in an interrupt exception handler before recognizing another interrupt request.

20.10 Bus Errors

The system hardware can use the transfer error acknowledge ($\overline{\text{TEA}}$) signal to abort the current bus cycle when a fault is detected. A bus error is recognized during a bus cycle when $\overline{\text{TEA}}$ is asserted.

NOTE

The signal $\overline{\text{TEA}}$ is not intended for use in normal operation since each chip select can be programmed to automatically terminate a bus cycle at a time defined by the bits programmed into the wait state field of the Chip Select Option Register. There is an on chip bus monitor which can be configured to generate an internal $\overline{\text{TEA}}$ signal.

When the MCF5272 recognizes a bus error condition for an access, the access is terminated immediately. An access that requires more than one transfer aborts without completing the remaining transfers if $\overline{\text{TEA}}$ is asserted, regardless of whether the access uses burst or non-burst transfers.

Figure 20-20 shows a longword write access to a 32-bit port with a transfer error.

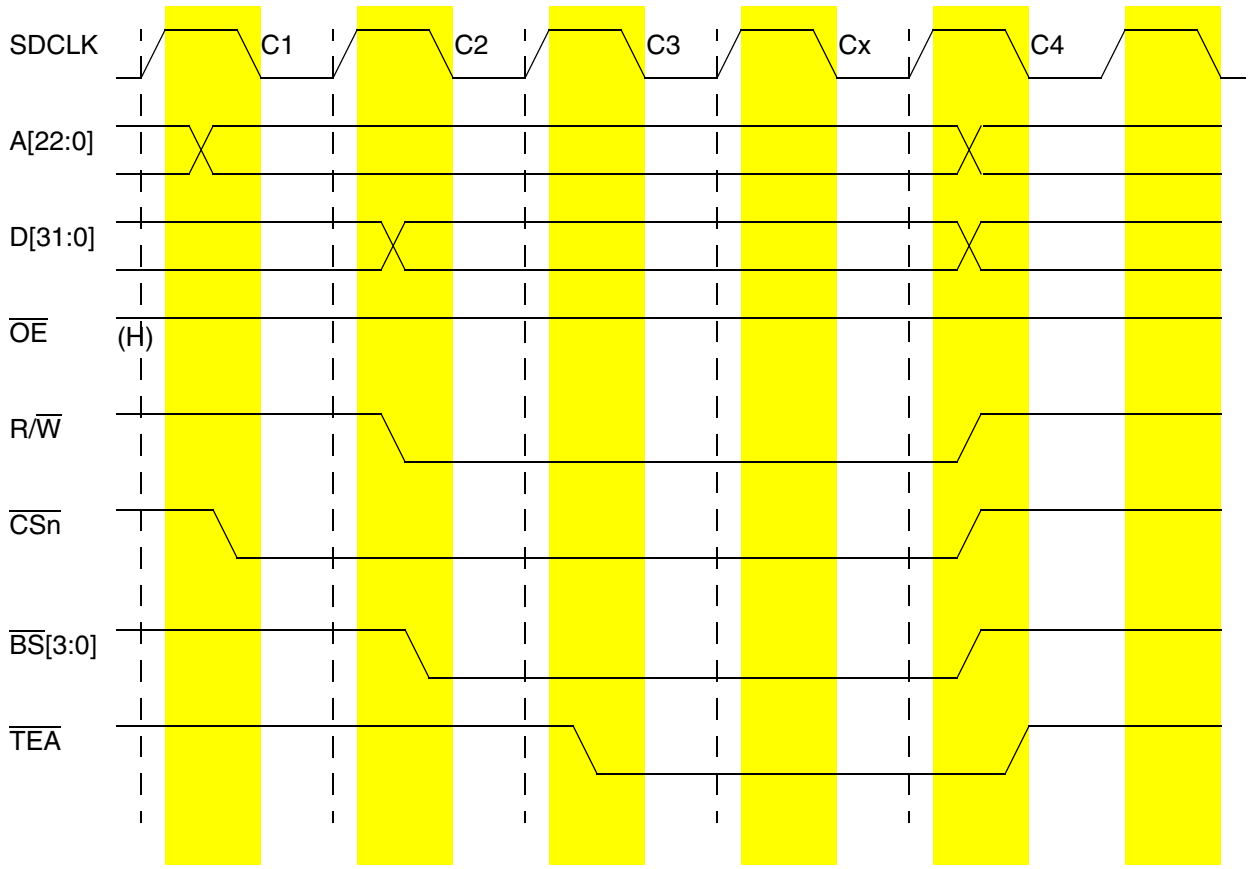

Figure 20-20. Longword Write Access To 32-Bit Port Terminated with TEA Timing

Clock 1 (C1)

The write cycle starts in C1. During C1, the MCF5272 places valid values on the address bus (A[22:0]) and the chip select signal.

Clock 2 (C2)

During C2, the MCF5272 drives the data bus, the byte strobes, and R/W.

Clock 3 (C3)

During C3, the selected device detects an error and asserts TEA. At the end of C3 or Cx, the MCF5272 samples the level of TEA. If it is asserted, the transfer of the longword is aborted and the transfer terminates.

NOTE

This example shows TEA being asserted during C3. TEA can be asserted earlier or later than C3.

NOTE

If TA is asserted when debug transfer error-acknowledge (TEA) is asserted, the transfer is terminated with a bus error.

NOTE

$\overline{TEA}$ normally should be asserted for no more than three CLKIN periods. The minimum is two clock periods.

NOTE

$\overline{TEA}$ is internally synchronized on the rising edge of CLKIN. Depending on when this synchronization takes place, the Cx cycle may not occur.

20.11 Bus Arbitration

The MCF5272 does not allow external bus masters. There are three on-chip bus masters. These are the ColdFire core, the Fast Ethernet Controller, and the memory-to-memory DMA Controller.

20.12 Reset Operation

The MCF5272 supports four types of reset, two of which are external hardware resets (master reset and normal reset), a soft reset, which is generated by setting SCR[SOFTRST], and the software watchdog reset.

There are two reset input pins, $\overline{RSTI}$ and $\overline{DRESETEN}$. When $\overline{DRESETEN}$ is asserted, any of the reset sources reset the SDRAM controller. When $\overline{DRESETEN}$ is negated, the SDRAM controller is not reset. This is useful during software debugging since it is preferable to retain SDRAM data in the case of catastrophic system failure. In a production system, if may be preferable to tie $\overline{DRESETEN}$ low.

Master reset resets the entire MCF5272 including the SDRAM controller. Master reset occurs when both $\overline{RSTI}$ and $\overline{DRESETEN}$ are asserted simultaneously. This is the reset that should be applied to the MCF5272 device at power up.

Normal reset resets all of the MCF5272 with the exception of the SDRAM controller. Normal reset occurs when $\overline{RSTI}$ is asserted and $\overline{DRESETEN}$ is negated. Normal reset allows DRAM refresh cycles to continue at the programmed rate and with the programmed waveform timing while the remainder of the system is being reset, maintaining the data stored in DRAM.

SCR[SOFTRST] resets all on-chip peripherals and devices connected to $\overline{RSTO}$. It resets the SDRAM controller only when $\overline{DRESETEN}$ is asserted.

The software watchdog reset acts as an internally generated normal reset when $\overline{DRESETEN}$ is negated. It resets the SDRAM controller only when $\overline{DRESETEN}$ is asserted.

NOTE

Master reset must be asserted for all power-on resets. This is done by driving $\overline{RSTI}$ and $\overline{DRESETEN}$ low simultaneously. Failure to assert master reset during power-on sequences results in unpredictable DRAM controller behavior.

20.12.1 Master Reset

To perform a master reset, an external device asserts RSTI and DRESETEN simultaneously for a minimum of six CLKIN cycles after VDD is within tolerance. This should always be done when power is initially applied. A master reset resets the entire device including the SDRAM controller.

Figure 20-21 is a functional timing diagram of the master reset operation, illustrating relationships among VDD, RSTI, DRESETEN, RSTO, mode selects, and bus signals.

CLKIN must be stable by the time VDD reaches the minimum operating specification. RSTI and DRESETEN are internally synchronized on consecutive rising and falling clocks before being used. They must meet the specified setup and hold times to the falling edge of CLKIN only if recognition by a specific falling edge is required

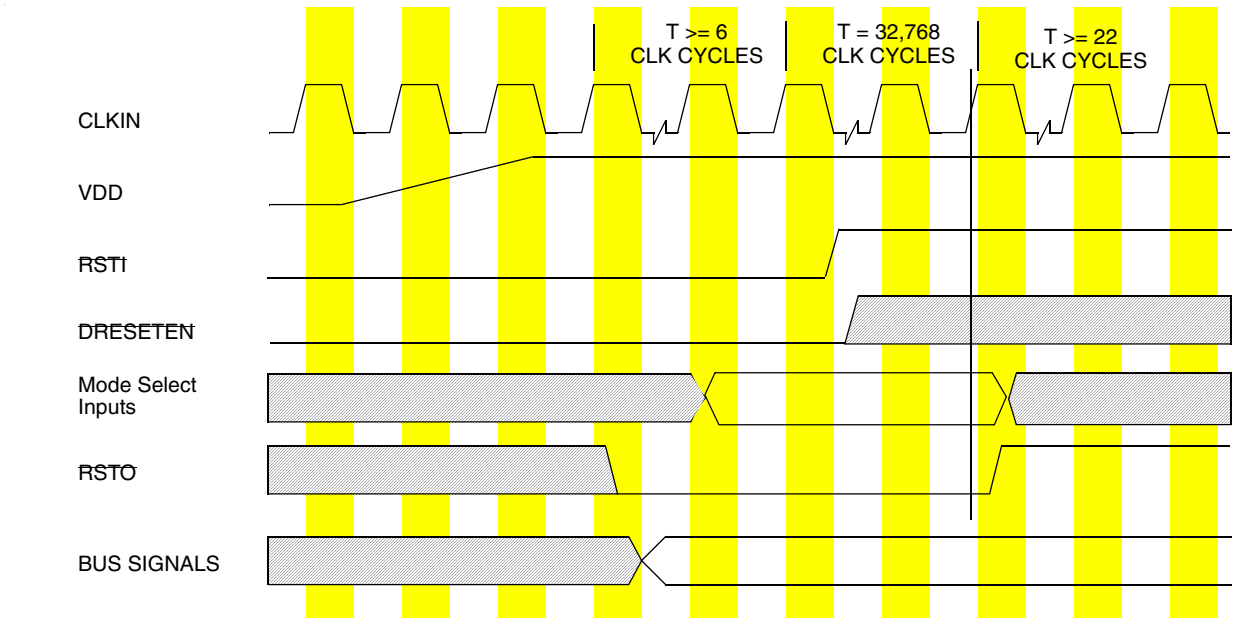

Figure 20-21. Master Reset Timing

When the assertion of RSTI is recognized internally, the MCF5272 asserts the reset out pin (RSTO). The RSTO pin is asserted as long as RSTI is asserted and remains asserted for 32,768 CLKIN cycles after RSTI is negated.

During the master reset period, all outputs are driven to their default levels. Once RSTO negates, all bus signals continue to remain in this state until the ColdFire core begins the first bus cycle for reset exception processing.

The levels of the mode select inputs, QSPI_Dout/WSEL, QSPI_CLK/BUSW1, and QSPI_CS0/BUSW0, are sampled when RSTO negates and they select the port size of CS0 and the physical data bus width after a master reset occurs. The INTx signals are synchronized and are registered on the last falling edge of CLKIN where RSTI is asserted.

A master reset causes any bus cycle (including SDRAM refresh cycles) to terminate. In addition, master reset initializes registers appropriately for a reset exception. During an external master reset, SCR[RSTSRC] is set to 0b11 to indicate that assertion of RSTI and DRESETEN caused the previous reset.

20.12.2 Normal Reset

External normal resets should be performed anytime it is important to maintain the data stored in SDRAM during a reset. An external normal reset is performed when an external device asserts RSTI while negating DRESETEN. At power on reset both RSTI and DRESETEN must be asserted simultaneously. If DRESETEN is not asserted at the same time as RSTI at power up, the SDRAMC cannot be initialized by software.

During an external normal reset, RSTI must be asserted for a minimum of six CLKINs. Figure 20-22 is a functional timing diagram of external normal reset operation, illustrating relationships among RSTI, DRESETEN, RSTO, mode selects, and bus signals. RSTI and DRESETEN are internally synchronized on consecutive falling and rising clocks before being used and must meet the specified setup and hold times to the falling edge of CLKIN only if recognition by a specific falling edge is required

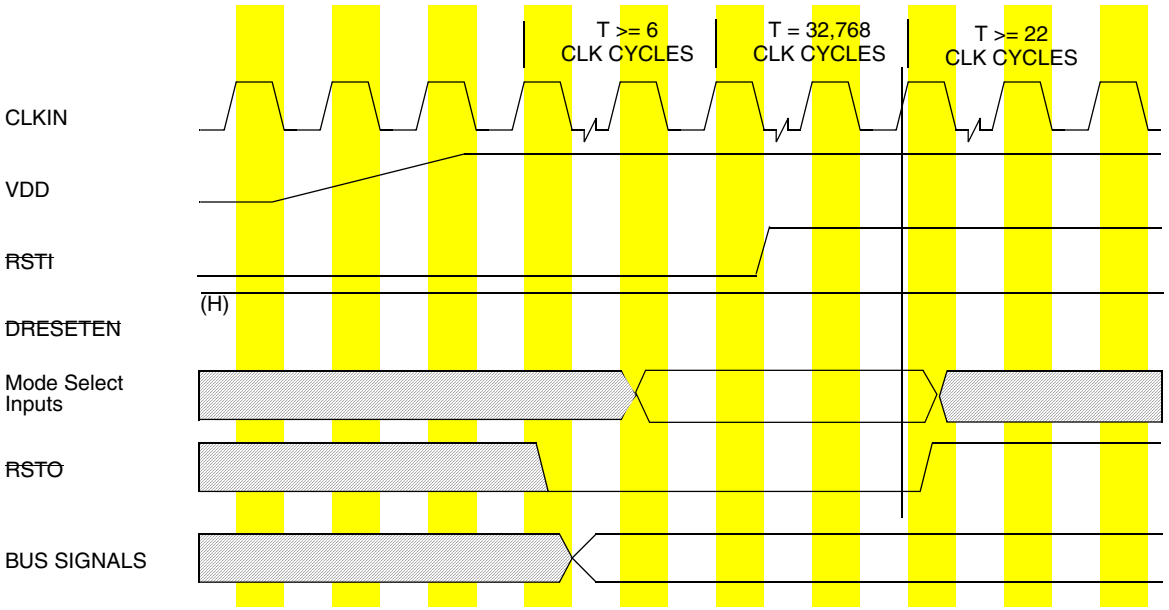

Figure 20-22. Normal Reset Timing

The levels of the mode select inputs, QSPI_Dout/WSEL, QSPI_CLK/BUSW1, QSPI_CS0/BUSW0, and HiZ are sampled when RSTO negates and they select the port size of CS0 and the physical data bus width after a master reset occurs. RSTO is asserted as long as RSTI is asserted and remains asserted for 32,768 CLKIN cycles after RSTI is negated. For proper normal reset operation, DRESETEN must be negated as long as RSTI is asserted.

The levels of the mode select inputs, QSPI_Dout/WSEL, QSPI_CLK/BUSW1, and QSPI_CS0/BUSW0, are sampled when RSTO negates and they select the port size of CS0 and the physical data bus width after a master reset occurs. The INTx signals are synchronized and are registered on the last falling edge of CLKIN where RSTI is asserted.

During the normal reset period, all outputs are driven to their default levels. Once RSTO negates, all bus signals continue to remain in this state until the ColdFire core begins the first bus cycle for reset exception processing.

A normal reset causes all bus activity except SDRAM refresh cycles to terminate. During a normal reset, SDRAM refresh cycles continue to occur at the programmed rate and with the programmed waveform timing. In addition, normal reset initializes registers appropriately for a reset exception. During a normal reset, SCR[RSTSRC] is set to 0b01 to indicate assertion of $\overline{\text{RSTI}}$ with $\overline{\text{DRESETEN}}$ negated caused the previous reset.

20.12.3 Software Watchdog Timer Reset Operation

A software watchdog timer is provided to allow periodic monitoring of software activity. If the software watchdog is not periodically accessed by software it can programmed to generate a reset after a timeout period. When the timeout occurs, an internal reset is asserted for 32K clocks, resetting internal registers as with a normal reset. The $\overline{\text{RSTO}}$ pin simultaneously asserts for 32K clocks after the software watchdog timeout. Figure 20-23 illustrates the timing of $\overline{\text{RSTO}}$ when asserted by a software watchdog timeout.

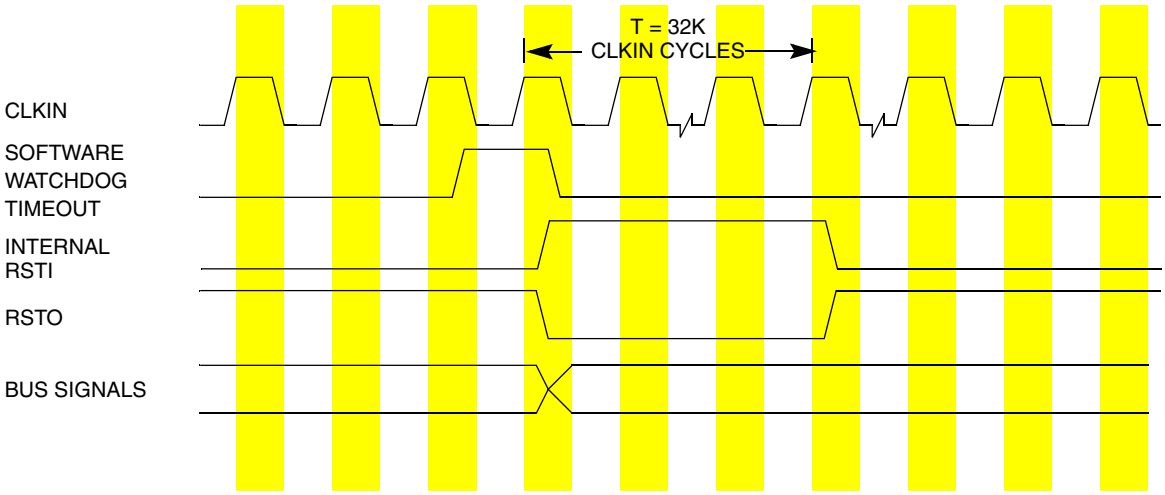

Figure 20-23. Software Watchdog Timer Reset Timing

NOTE

Like the normal reset, the internal reset generated by a software watchdog timeout does not reset the SDRAM controller unless $\overline{\text{DRESETEN}}$ is low during the reset. When $\overline{\text{DRESETEN}}$ is high, SDRAM refreshes continue to be generated during and after the reset at the programmed rate and with the programmed waveform timing.

During the software watchdog timer reset period, all outputs are driven to their default levels. Once $\overline{\text{RSTO}}$ negates, all bus signals continue to remain in this state until the ColdFire core begins the first bus cycle for reset exception processing.

During a software watchdog timer reset, SCE[RSTSRC] is set to 0b10 to indicate the software watchdog as the source of the previous reset.

NOTE

The levels of the mode pins are not sampled during a software watchdog reset. If the port size and acknowledge features of $\overline{CS0}$ are different from the values programmed in CSBR0 and CSOR0 at the time of the software watchdog reset, you must assert $\overline{RSTI}$ during software watchdog reset to cause the mode pins to be resampled.

20.12.4 Soft Reset Operation

If the soft reset bit, SCR[SOFTRST], is programmed to generate a reset, $\overline{RSTO}$ is asserted for 128 clocks, resetting all external devices as with a normal or master reset. All internal peripherals with the exception of the SIM, chip select, interrupt controller, GPIO module, and SDRAM controller are reset also. The SDRAM controller is reset only when $\overline{DRESETEN}$ is tied low.

SCR[SOFTRST] is automatically cleared at the end of the 128 clock period. Software can monitor this bit to determine the end of the soft reset. Figure 20-24 shows the timing of $\overline{RSTO}$ when asserted by SCR[SOFTRST].

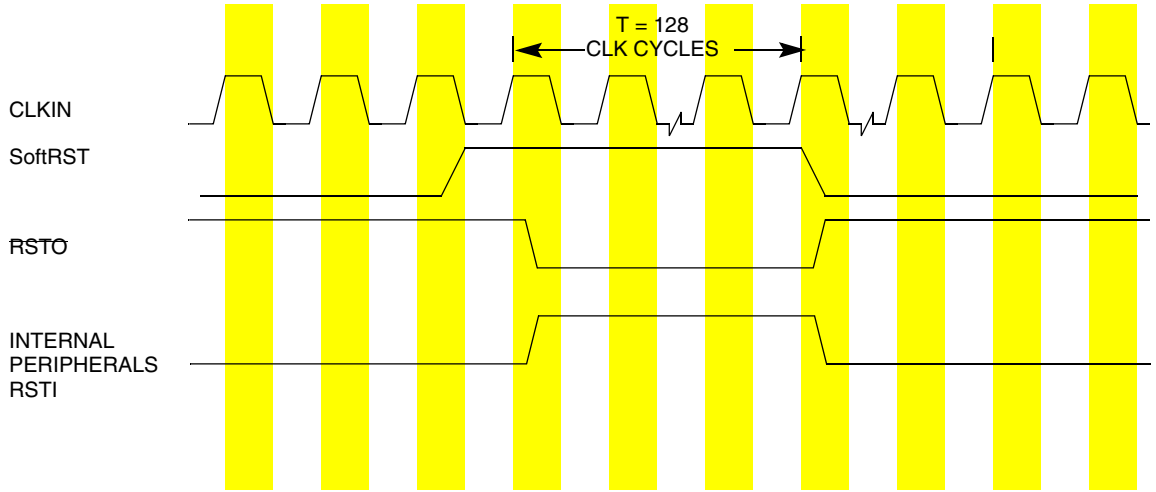

Figure 20-24. Soft Reset Timing

NOTE

Like the normal reset, the soft reset does not reset the SDRAM controller unless $\overline{DRESETEN}$ is asserted during the reset. When $\overline{DRESETEN}$ is negated, SDRAM refreshes continue to be generated during and after reset at the programmed rate and with the programmed waveform timing.

During the soft reset period, all bus signals continue to operate normally.

Chapter 21
IEEE 1149.1 Test Access Port (JTAG)

This chapter describes the dedicated user-accessible test logic implemented on the MCF5272. This test logic complies fully with the IEEE 1149.1 Standard Test Access Port and Boundary Scan Architecture. This chapter describes those items required by the standard and provides additional information specific to the MCF5272 implementation. For internal details and sample applications, see the IEEE 1149.1 document.

21.1 Overview

Problems with testing high-density circuit boards led to development of this standard under the sponsorship of the Test Technology Committee of IEEE and the Joint Test Action Group (JTAG). The MCF5272 supports circuit board test strategies based on this standard.

The test logic includes a test access port (TAP) consisting a 16-state controller, an instruction register, and three test registers (a 1-bit bypass register, a 265-bit boundary-scan register, and a 32-bit ID register). The boundary scan register links the device's pins into one shift register. The contents of this register can be found at the ColdFire website at http://www.freescale.com. Test logic, implemented using static logic design, is independent of the device system logic. The TAP includes the following dedicated signals:

- TCK—Test clock input to synchronize the test logic.
- TMS—Test mode select input (with an internal pullup resistor) that is sampled on the rising edge of TCK to sequence the TAP controller's state machine.
- TDI—Test data input (with an internal pull-up resistor) that is sampled on the rising edge of TCK.
- TDO—three-state test data output that is actively driven in the shift-IR and shift-DR controller states. TDO changes on the falling edge of TCK.

These signals, described in detail in Table 21-1, are enabled by negating the Freescale test mode signal (MTMOD).

The MCF5272 implementation can do the following:

- Perform boundary scan operations to test circuit board electrical continuity
- Sample MCF5272 system pins during operation and transparently shift out the result in the boundary scan register
- Bypass the MCF5272 for a given circuit board test by effectively reducing the boundary-scan register to a single bit
- Disable the output drive to pins during circuit-board testing
- Drive output pins to stable levels

NOTE

Precautions to ensure that the IEEE 1149.1 test logic does not interfere with non-test operation are described in Section 21.7, "Non-IEEE 1149.1 Operation."

Figure 21-1 shows the MCF5272 implementation of IEEE 1149.1.

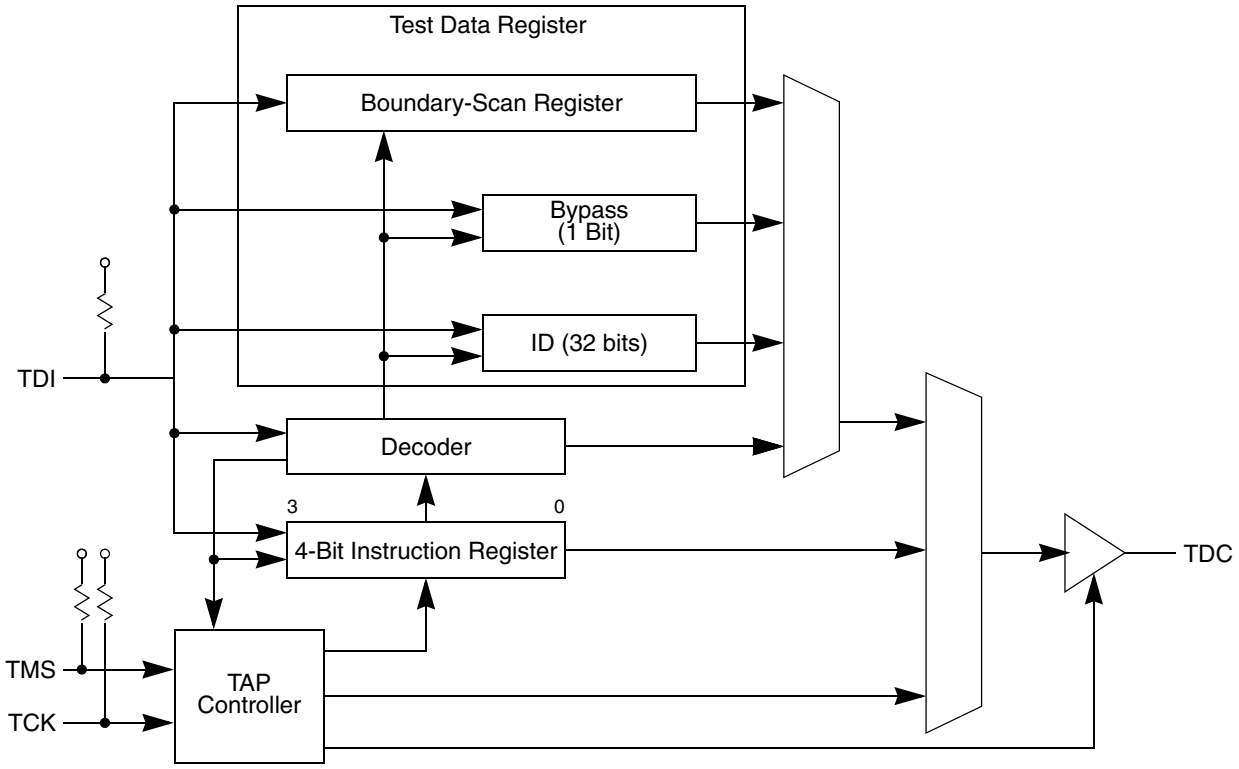

Figure 21-1. Test Access Port Block Diagram

21.2 JTAG Test Access Port and BDM Debug Port

The JTAG test interface shares pins with the debug modules (see Table 21-1).

Table 21-1. JTAG Signals

Signal	Description
TCK/ PSTCLK	Test clock. TCK is the dedicated JTAG test logic clock input, independent of the CPU system clock. It provides a clock for on-board test logic defined by the IEEE 1149.1 standard. TCK should be grounded if the JTAG port is not used and MTMOD is tied low.
$\overline{\text{TMS}}$/ $\overline{\text{BKPT}}$	Test mode select. This input controls test mode operations for on-board test logic defined by the IEEE 1149.1 standard. Connecting TMS to VDD disables the test controller, making all JTAG circuits transparent to the system.
TDO/ DSO	Test and debug data out. Output for shifting data out of serial data port logic. Shifting out data depends on the state of the JTAG controller state machine and the instructions in the instruction register. The shift occurs on the falling edge of TCK. When not outputting data, TDO is placed in high-impedance state. TDO can also be three-stated to allow bused or parallel connections to other devices having JTAG test access ports.

Table 21-1. JTAG Signals (continued)

Signal	Description
TDI/DSI	Test and debug data in. Input provided for loading serial data port shift registers (boundary-scan, bypass, and instruction registers). Shifting in of data depends on the state of the JTAG controller state machine and the instruction currently in the instruction register. Data is shifted in on the rising edge of TCK.
$\overline{\text{TRST}}$/ DSCLK	JTAG test reset. $\overline{\text{TRST}}$ asynchronously resets the JTAG TAP logic when low.
MTMOD	Freescale test mode select. Negating MTMOD enables JTAG mode; asserting it enables BDM mode.

21.3 TAP Controller

The TAP controller is a synchronous state machine that controls JTAG logic and interprets the sequence of logical values on TMS. The value adjacent to each arrow in the state machine in Figure 21-2 reflects the value of TMS sampled on the rising edge of TCK. For a description of the TAP controller states, refer to the IEEE 1149.1 document.

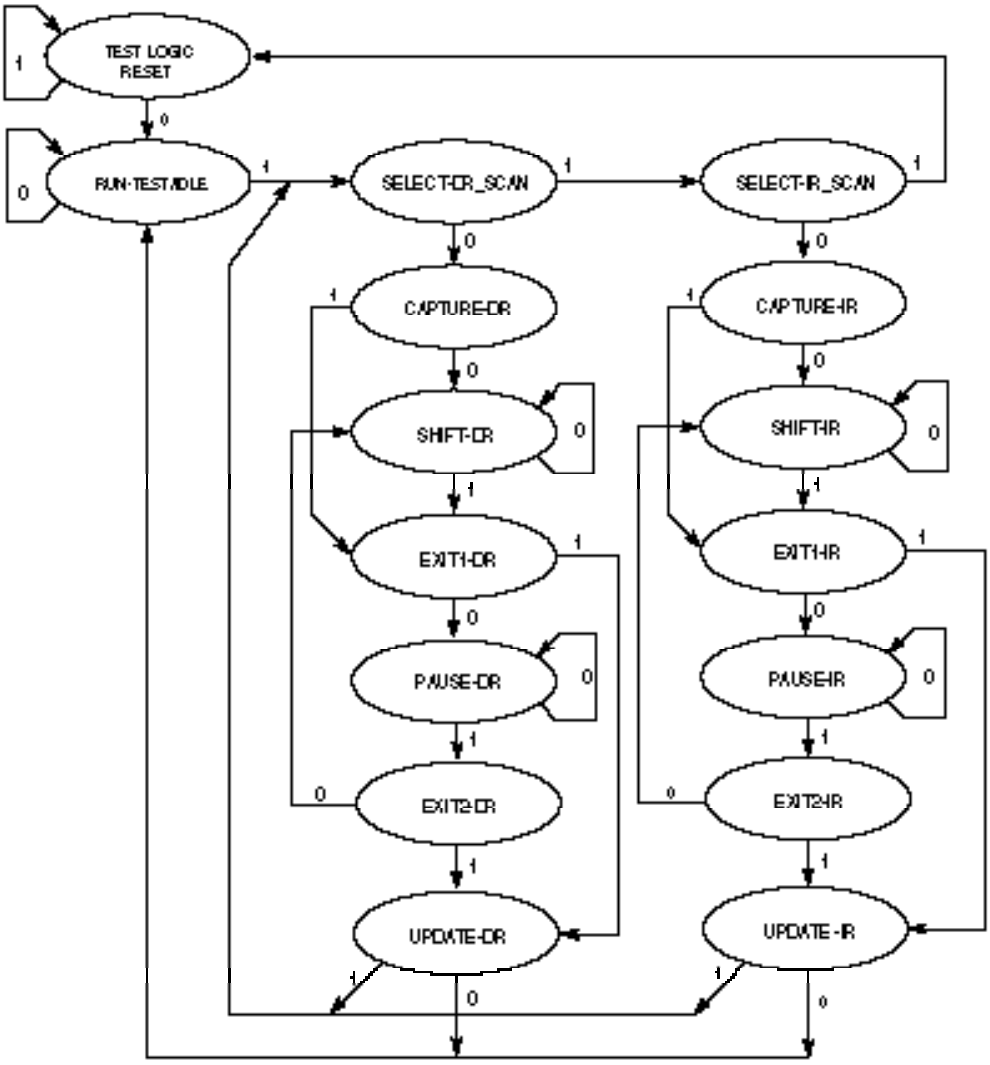

Figure 21-2. TAP Controller State Machine

21.4 Boundary Scan Register

The boundary scan register contains bits for all device signal and clock pins and associated control signals. Bidirectional pins include a single scan bit for data (IO.Cell) as shown in Figure 21-6. These bits are controlled by an enable cell, shown in Figure 21-5. The control bit value determines whether the bidirectional pin is an input or an output. One or more bidirectional data bits can be serially connected to a control bit as shown in Figure 21-7. Note that when bidirectional data bits are sampled, bit data can be interpreted only after examining the I/O control bit to determine pin direction.

Open-drain bidirectional bits require separate input and output cells as no direction control is available from which to determine signal direction. Programmable open-drain signals also have an enable cell (XXX.de) to select whether the pin is open drain or push-pull. Signals with pull-up or pull-down resistors have an associated enable cell (XXX.pu); one enable cell can control multiple resistors.

Figure 21-3 to Figure 21-8 show the four MCF5272 cell types.

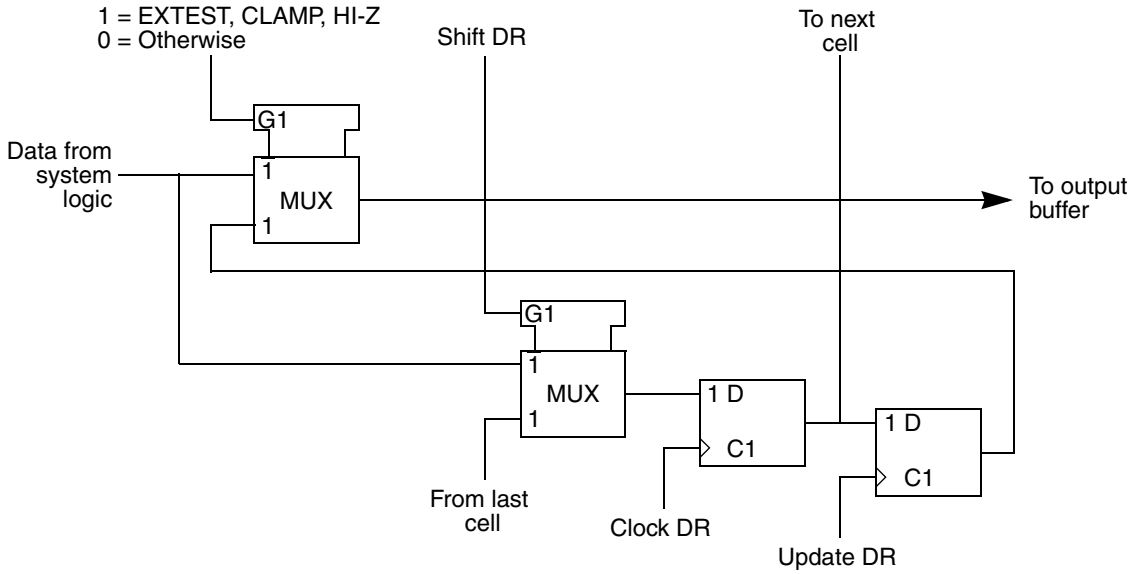

Figure 21-3. Output Cell (O.Cell) (BC–1)

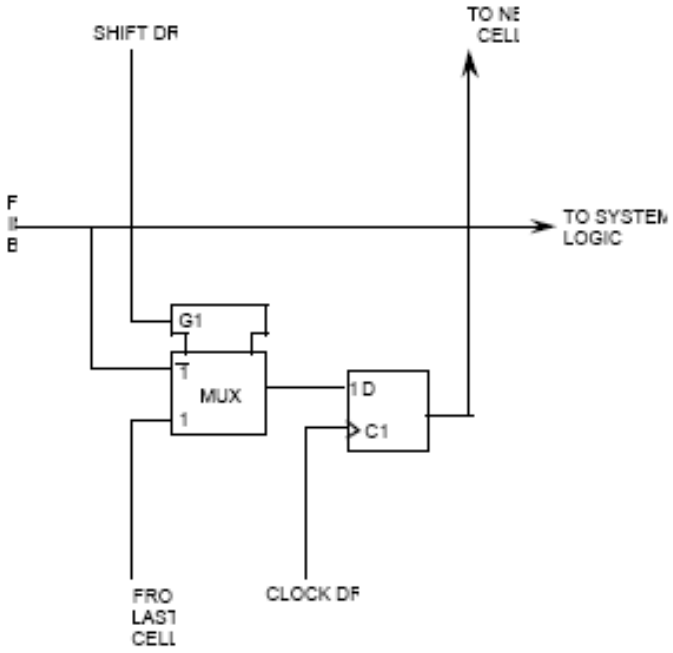

Figure 21-4. Input Cell (I.Cell). Observe only (BC–4)

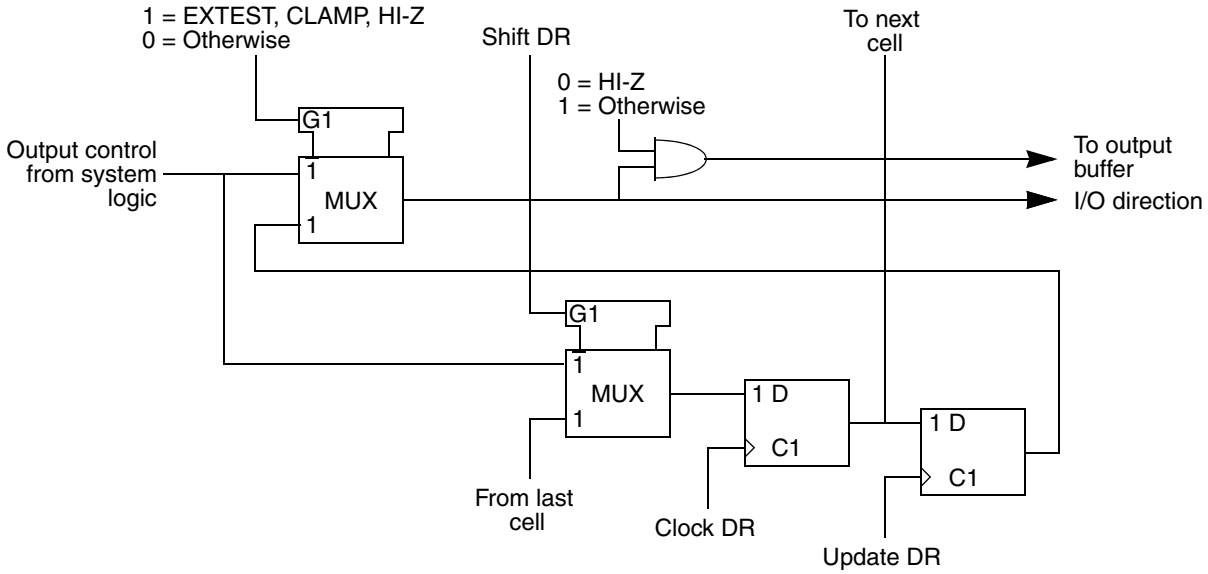

Figure 21-5. Output Control Cell (En.Cell) (BC–4)

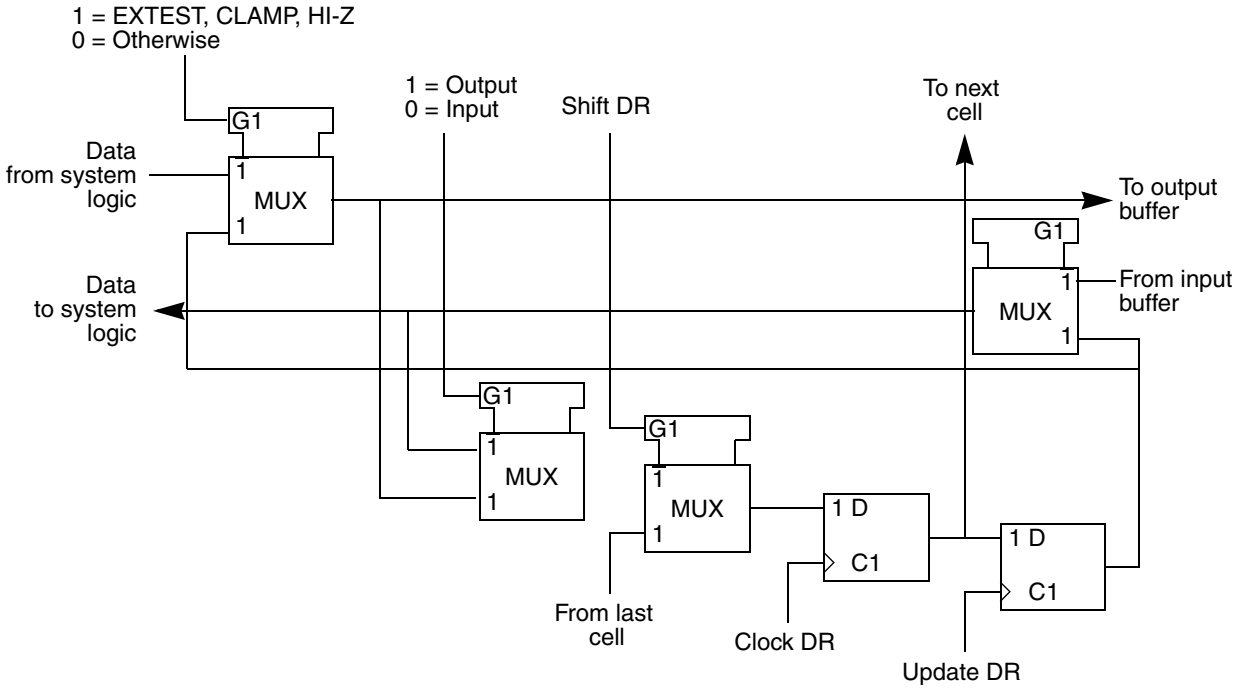

Figure 21-6. Bidirectional Cell (IO.Cell) (BC–6)

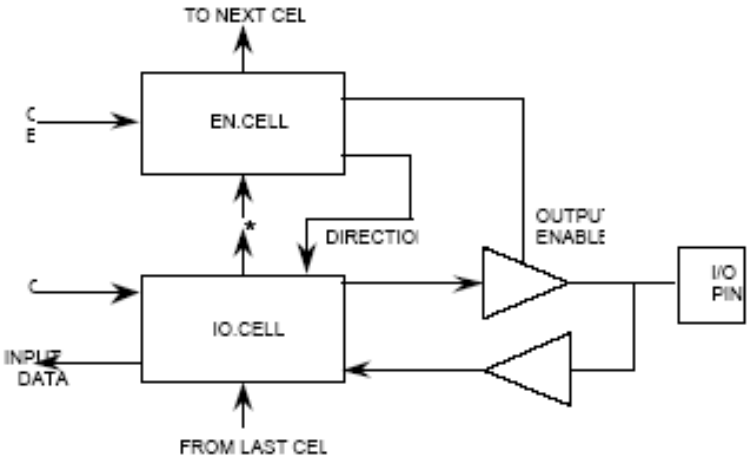

NOTE: More than one IO.Cell could be serially connected and controlled by a single En.Cell.

Figure 21-7. General Arrangement for Bidirectional Pins

21.5 Instruction Register

The MCF5272 IEEE 1149.1 implementation includes the three mandatory public instructions (EXTEST, SAMPLE/PRELOAD, and BYPASS), the optional public ID instruction, plus two additional public instructions (CLAMP and HI-Z) defined by IEEE 1149.1. The MCF5272 includes a 4-bit instruction register without parity, consisting of a shift register with four parallel outputs. Data is transferred from the shift register to the parallel outputs during the update-IR controller state. The 4 bits are used to decode the instructions in Table 21-2.

The parallel output of the instruction register is reset to 0001 in the test-logic-reset controller state. Note that this preset state is equivalent to the ID instruction.

Table 21-2. Instructions

B[3:0]	Instruction	Description
0000	EXTEST	The external test (EXTEST) instruction selects the boundary scan register. EXTEST asserts internal reset for the MCF5272 system logic to force a predictable benign internal state while performing external boundary scan operations. By using the TAP, the register is capable of a) scanning user-defined values into the output buffers, b) capturing values presented to input pins, c) controlling the direction of bidirectional pins, and d) controlling the output drive of three-state output pins. For more details on the function and uses of EXTEST, please refer to the IEEE 1149.1 document.
0001	ID	During the capture-IR controller state, the parallel inputs to the instruction shift register are loaded with the 4-bit binary value (0001). The parallel outputs, however, remain unchanged by this action since an update-IR signal is required to modify them.
0010	SAMPLE/ PRELOAD	The SAMPLE/PRELOAD instruction selects the boundary scan register and provides two separate functions. First, it provides a means to obtain a snapshot of system data and control signals. The snapshot occurs on the rising edge of TCK in the capture-DR controller state. The data can be observed by shifting it transparently through the boundary scan register. Because there is no internal synchronization between the IEEE 1149.1 clock (TCK) and the system clock (CLKOUT), the user must provide some form of external synchronization to achieve meaningful results. The second function of SAMPLE/PRELOAD is to initialize the boundary scan register output bits prior to selection of EXTEST. This initialization ensures that known data appears on the outputs when entering the EXTEST instruction.
1001	HI-Z	The HI-Z instruction anticipates the need to backdrive the output pins and protect the input pins from random toggling during circuit board testing. The HIGHZ instruction selects the bypass register, forcing all output and bidirectional pins to the high-impedance state. The HI-Z instruction goes active on the falling edge of TCK in the update-IR state when the data held in the instruction shift register is equivalent to octal 5.
1100	CLAMP	When the CLAMP instruction is invoked, the boundary scan multiplexer control signal EXTEST is asserted, and the BYPASS register is selected. CLAMP should be invoked after valid data has been shifted into the boundary scan register, e.g., by SAMPLE/PRELOAD. CLAMP allows static levels to be presented at the MCF5272 output and bidirectional pins, like EXTEST, but without the shift latency of the boundary scan register from TDI to TDO.
1101	Reserved	Reserved
1111	BYPASS	The BYPASS instruction selects the single-bit bypass register as shown in Figure 21-8. This creates a shift register path from TDI to the bypass register and, finally, to TDO, circumventing the boundary scan register. This instruction is used to enhance test efficiency when a component other than the MCF5272 becomes the device under test. When the bypass register is selected by the current instruction, the shift register stage is set to a logic zero on the rising edge of TCK in the capture-DR controller state. Therefore, the first bit to be shifted out after selecting the bypass register is always a logic zero.

Figure 21-8 shows the structure of the bypass register.

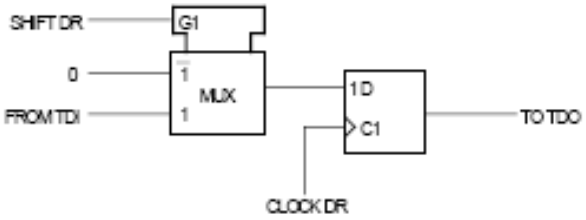

Figure 21-8. Bypass Register

21.6 Restrictions

The control afforded by the output enable signals using the boundary scan register and the EXTEST instruction requires a compatible circuit board test environment to avoid configurations that could damage the device. The user must avoid situations in which the MCF5272 output drivers are enabled into actively driven networks. Overdriving the TDO driver when it is active is not recommended.

21.7 Non-IEEE 1149.1 Operation

In non-IEEE 1149.1 operation, IEEE 1149.1 test logic must be made transparent to system logic by forcing the TAP controller into test-logic-reset state, which takes at least five consecutive TCK rising edges with TMS high. TMS has an internal pull-up resistor and may be left unconnected.

If TMS is unconnected or connected to V_{CC}, the TAP controller cannot exit test-logic-reset state, regardless of the TCK state. This requires the TMS, TCK, and TDI inputs to be high.

Chapter 22
Mechanical Data

This chapter contains drawings showing the pinout and the packaging and mechanical characteristics of the MCF5272.

22.1 Pinout

Figure 22-1 shows a pinout of the MCF5272.

	1	2	3	4	5	6	7	8	9	10	11	12	13	14
A	DDATA3	DDATA1	$\overline{\text{TEA}}$	TDI/ DSI	D16/ D0	D18/ D2	D21/ D5	D22/ D6	$\overline{\text{BS0}}$	$\overline{\text{RAS0}}$	A13/ SDA12/ SDA11	A2/ SDA1/ SDA0	A3/ SDA2/ SDA1	A4/ SDA3/ SDA2
B	PST0	DDATA2	MTMOD	$\overline{\text{TMS}}$/ $\overline{\text{BKPT}}$	A20	D17/ D1	D20/ D4	D23/ D7	$\overline{\text{SDWE}}$	$\overline{\text{SDCS}}$/ $\overline{\text{CS7}}$	A12/ SDA11	A1/ SDA0	A5/ SDA4/ SDA3	A6/ SDA5/ SDA4
C	PST2	PST1	DDATA0	TCK/ PSTCLK	A21	A18	D19/ D3	$\overline{\text{BS1}}$	$\overline{\text{CAS0}}$	A14/ SDA13/ SDA12	A11/ SDA9	A7/ SDA6/ SDA5	A8/ SDA7/ SDA6	A9/ SDA8/ SDA7
D	PA1/ USB_RP	PA0/ USB_TP	PST3	$\overline{\text{TRST}}$/ DSCLK	TDO/ DSO	A19	A17	A16	A15	A0	D14/ PC14	A10/ SDA9/ SDA8	SDCLKE	A10_PRECHG
E	PA6/ USB_RXD	PA5/ USB_TXEN	PA4/ USB_SUSP	PA3/ USB_TN	PA2/ USB_RN	$\overline{\text{TEST}}$	GND	GND	A22	D15/ PC15	D13/ PC13	$\overline{\text{BS2}}$	$\overline{\text{BS3}}$	SDCLK
F	USB_D+	USB_D-	PB5/ TA	$\overline{\text{RSTO}}$	VDD	VDD	GND	GND	VDD	VDD	D12/ PC12	D24/ D8	D25/ D9	D26/ D10
G	USB_VDD	USB_GND	PB4/ URT0_CLK	PB6	VDD	GND	GND	GND	GND	VDD	D11/ PC11	D27/ D11	D28/ D12	D29/ D13
H	PB1/ URT0_RXD	$\overline{\text{PB2}}$/ URT0_CTS	$\overline{\text{PB3}}$/ URT0_RTS	PB0/ URT0_TXD	VDD	GND	GND	GND	GND	VDD	D10/ PC10	SDBA1	D31/ D15	D30/ D14
J	USB_CLK	PA8/ FSC0/ FSR0	PA9/ DGNT0	DCL0/ URT1_CLK	VDD	VDD	GND	GND	VDD	VDD	D7	D8	D9	SDBA0
K	DIN0/ URT1_RXD	$\overline{\text{URT1_CTS}}$/ QSPI_CS2	$\overline{\text{URT1_RTS}}$/ $\overline{\text{INT5}}$	DOUT0/ URT1_TXD	PA10/ DREQ0	PWM_OUT2/ TIN1	VDD	VDD	$\overline{\text{CS0}}$/ BOOT	$\overline{\text{CS1}}$	D3/ PC3	D4/ PC4	D5/ PC5	D6/ PC6
L	PA11/ QSPI_CS1	PA12/ DFSC2	PA13/ DFSC3	FSC1/ FSR1/ DFSC1	QSPI_CLK/ BUSW1	TIN0	E_TXCLK	PB10/ E_TXD1	PB14/ E_RXER	E_CRS	$\overline{\text{CS5}}$	D0/ PC0	D1/ PC1	D2/ PC2
M	DCL1/ GDCL1_OUT	PA14/ DREQ1	$\overline{\text{PA15_INT6}}$/ $\overline{\text{DGNT1_INT6}}$	$\overline{\text{INT1}}$/ USB_WOR	QSPI_CS0/ BUSW0	PB7/ TOUT0	E_RXDV	PB9/ E_TXD2	PB13/ E_RXD1	E_TXER	$\overline{\text{CS4}}$	$\overline{\text{RSTI}}$	BYPASS	CLKIN
N	DOUT1	DIN1	$\overline{\text{INT3}}$	QSPI_DOUT/ WSEL	PWM_OUT0	E_TXD0	E_RXCLK	PB8/ E_TXD3	PB12/ E_RXD2	E_MDIO	$\overline{\text{CS3}}$	$\overline{\text{DRESE}}$ $\overline{\text{TEN}}$	VDD	$\overline{\text{HiZ}}$
P	PA7/ QSPI_CS3/ DOUT3	$\overline{\text{DIN3}}$/ INT4	$\overline{\text{INT2}}$	QSPI_DIN	PWM_OUT1/ TOUT1	E_COL	E_RXD0	E_TXEN	PB11/ E_RXD3	PB15/ E_MDC	$\overline{\text{CS2}}$	$\overline{\text{CS6}}$	$\overline{\text{OE}}$/ RD	R/$\overline{\text{W}}$

Figure 22-1. MCF5272 Pinout (196 MAPBGA)

22.2 Package Dimensions

Figure 22-2 shows MCF5272 package dimensions.

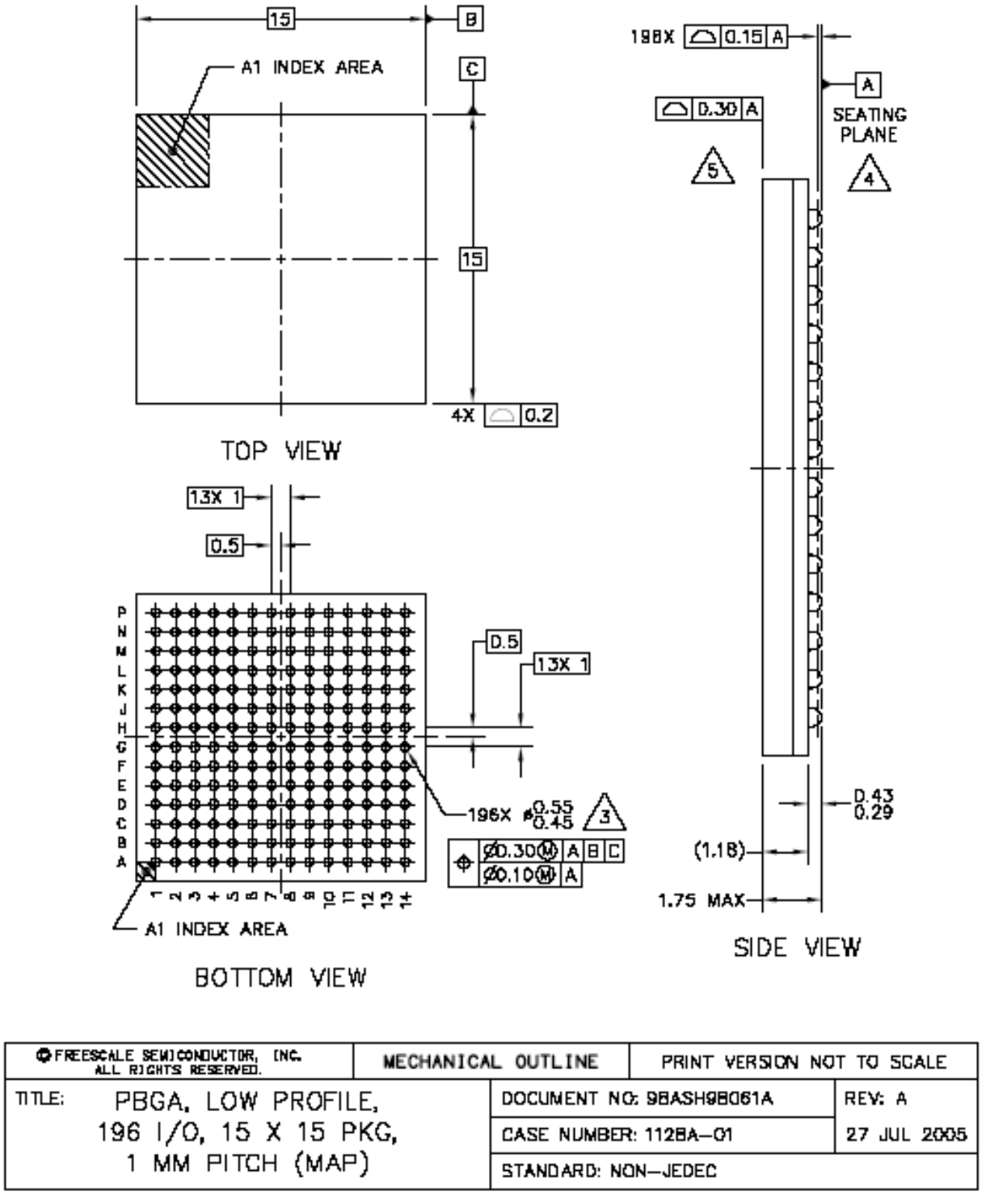

Figure 22-2. 196 MAPBGA Package Dimensions (Case No. 1128A-01)

Chapter 23
Electrical Characteristics

This chapter describes AC and DC electrical specifications and thermal characteristics for the MCF5272 microcontroller. Because additional speeds may have become available since the publication of this book, consult Freescale's ColdFire web page, http://www.freescale.com, to confirm that this is the latest information.

23.1 Maximum Ratings

This section contains information on the maximum ratings of the MCF5272 microcontroller.

23.1.1 Supply, Input Voltage, and Storage Temperature

Table 23-1 lists maximum voltages and temperatures.

Table 23-1. Maximum Supply, Input Voltage and Storage Temperature

Rating	Symbol	Value	Unit
Supply voltage	V_{DD}	–0.3 to + 4.0	V
Maximum operating voltage	V_{DD}	+3.6	V
Minimum operating voltage	V_{DD}	+3.0	V
Input voltage	V_{in}	–0.5 to +5.5	V
Storage temperature range	T_{stg}	–55 to 150	°C

The ratings in Table 23-1 define maximum conditions to which the MCF5272 may be subjected without being damaged. However, the device cannot operate normally while exposed to these electrical extremes.

This device contains circuitry that protects against damage from high static voltages or electrical fields; however, normal precautions should be taken to avoid application of voltages higher than maximum-rated voltages to this high-impedance circuit. Reliability improves when unused inputs are tied to an appropriate logic voltage level (GND or V_{DD}).

23.1.2 Operating Temperature

Table 23-2 lists operating temperatures.

Table 23-2. Operating Temperature

Characteristic	Symbol	Value		Unit
		Standard	Extended	
Maximum operating junction temperature	T_J	100	115	°C
Maximum operating ambient temperature	T_{Amax}	70[1]	85[1]	°C
Minimum operating ambient temperature	T_{Amin}	0	-40	°C

1 Use this maximum operating ambient temperature only as a system design guideline. All device operating parameters are guaranteed only when the junction temperature lies within the specified range.

23.1.3 Resistance

Table 23-3 lists thermal resistance values.

Table 23-3. Thermal Resistance

Characteristic		Symbol	Value	Unit
Junction to ambient, natural convection	Single layer board (1s)	θ_{JA}	51[1,2]	°C/W
Junction to ambient, natural convection	Four layer board (2s2p)	θ_{JMA}	26[1,3]	°C/W
Junction to ambient (@200 ft/min)	Single layer board (1s)	θ_{JMA}	41[1,3]	°C/W
Junction to ambient (@200 ft/min)	Four layer board (2s2p)	θ_{JMA}	23[1,3]	°C/W
Junction to board		θ_{JB}	15[4]	°C/W
Junction to case		θ_{JC}	10[5]	°C/W
Junction to top of package	Natural convection	Ψ_{jt}	2[1,6]	°C/W

1 θ_{JA} and Ψ_{jt} parameters are simulated in accordance with EIA/JESD Standard 51-2 for natural convection. Freescale recommends the use of θ_{JA} and power dissipation specifications in the system design to prevent device junction temperatures from exceeding the rated specification. System designers should be aware that device junction temperatures can be significantly influenced by board layout and surrounding devices. Conformance to the device junction temperature specification can be verified by physical measurement in the customer's system using the Ψ_{jt} parameter, the device power dissipation, and the method described in EIA/JESD Standard 51-2.

2 Per SEMI G38-87 and JEDEC JESD51-2 with the single layer board horizontal.

3 Per JEDEC JESD51-6 with the board horizontal.

4 Thermal resistance between the die and the printed circuit board per JEDEC JESD51-8. Board temperature is measured on the top surface of the board near the package.

5 Thermal resistance between the die and the case top surface as measured by the cold plate method (MIL SPEC-883 Method 1012.1).

6 Thermal characterization parameter indicating the temperature difference between package top and the junction temperature per JEDEC JESD51-2. When Greek letters are not available, the thermal characterization parameter is written as Psi-JT.

23.2 DC Electrical Specifications

Table 23-4 lists DC electrical temperatures.

Table 23-4. DC Electrical Specifications

Characteristic	Symbol	Min	Max	Unit
Operation voltage range	V_{DD}	3.0	3.6	V
Input high voltage	V_{IH}	2. 0	5.0	V
Input low voltage	V_{IL}	GND	0.8	V
Input signal undershoot	—	—	0.8	V
Input signal overshoot	—	—	0.8	V
Input leakage current @ GND, V_{DD} CLKIN, D[31:0], PA[15:0], PB[15:0], TIN[1:0], $\overline{IRQ}$[6:1], CLK, $\overline{TEA}$, PST[3:0], DDATA[3:0], $\overline{RSTI}$, $\overline{DRESETEN}$, TDI, TCK, $\overline{HIZ}$, $\overline{MTMOD}$	I_{in}	—	20	µA
HI-Z (three-state) leakage current @GND, V_{DD}, A[22:0], D[31:0], $\overline{OE}$/RD, R/$\overline{W}$, TDO/DSO	I_{TSI}	—	20	µA
Signal low input current, V_{IL} = 0.8 V, TMS/$\overline{BKPT}$, TDI/DSI, $\overline{TRST}$/DSCLK	I_{IL}	0	1	mA
Signal high input current, V_{IH} = 2.0 V TMS/$\overline{BKPT}$, TDI/DSI, $\overline{TRST}$/DSCLK	I_{IH}	0	1	mA
Output high voltage	V_{OH}	2.4	—	V
Output low voltage	V_{OL}	—	0.5	V
Pin capacitance[1]	C_{in}	—	10	pF

1 This specification periodically sampled but not 100% tested.

23.2.1 Output Driver Capability and Loading

Table 23-5 lists values for drive capability and output loading.

Table 23-5. I/O Driver Capability

Signal	Drive Capability	Output Load (C_L)
A[22:0]	6 mA	30 pF
D[31:0]	6 mA	30 pF
$\overline{CS}$[6:0]	6 mA	30 pF
$\overline{BS}$	6 mA	30 pF
$\overline{OE}$/RD	4 mA	30 pF
DACK/HIZ	4 mA	30 pF
TC/BYPASS	4 mA	30 pF
A10_PRECHG	10 mA	30 pF
R/W	10 mA	30 pF
SDBA[1:0]	10 mA	30 pF
RAS0	10 mA	30 pF
CAS0	10 mA	30 pF
SDCLK	10 mA	30 pF

Table 23-5. I/O Driver Capability (continued)

Signal	Drive Capability	Output Load ($C_{L)}$
SDWE	10 mA	30 pF
SDCLKE	10 mA	30 pF
$\overline{SDCS}$/$\overline{CS7}$	10 mA	30 pF
TDO/DSO	4 mA	30 pF
TCK/PSTCLK	4 mA	30 pF
DDATA[3:0]	4 mA	30 pF
PST[3:0]	4 mA	30 pF
RSTO	4 mA	30 pF
PA[13:0]	2 mA	30 pF
PA14	4 mA	30 pF
PA15_INT6	2 mA	30 pF
PB0,PB3,PB7	4 mA	30 pF
PB[2:1],PB[6:4]	2 mA	30 pF
PB[10:8]	4 mA	30 pF
PB[15:11]	2 mA	30 pF
USB_D+ [1]	—	
USB_D- [1]	—	
DOUT1	2 mA	30 pF
FSC1	2 mA	30 pF
DCL1	4 mA	30 pF
URT2_CTS	2 mA	30 pF
URT2_RTS	2 mA	30 pF
URT2_TxD	2 mA	30 pF
QSPI_Dout	4 mA	30 pF
QSPI_CLK	4 mA	30 pF
QSPI_CS0	2 mA	30 pF
PWM_OUT[3:1]	4 mA	30 pF
E_TxD0	4 mA	30 pF
E_TxEN	2 mA	30 pF
E_MDIO	2 mA	30 pF
E_TxERR	2 mA	30 pF

[1] Requires external protection circuitry to meet USB 1.1 electrical requirements under all conditions (see 12.5.3, “Recommended USB Protection Circuit”).

23.3 AC Electrical Specifications

NOTE

AC timing specifications may be subject to change during ongoing qualification.

AC timing specifications assume maximum output load capacitance on all output pins including SDCLK. If this value is different, the input and output timing specifications would need to be adjusted to match the clock load.

AC timing specifications referenced to SDCLK assume SDRAM control register bit 3 is 0. After reset this bit is set.

23.3.1 Clock Input and Output Timing Specifications

Table 23-6 lists clock input and output timings.

Table 23-6. Clock Input and Output Timing Specifications

Name	Characteristic	0–66 MHz		Unit
		Min	Max	
	Frequency of operation	0	66.00	MHz
C1	CLKIN period (T) [1]	15	—	nS
C2 [2]	CLKIN fall time (from V_h = 2.4 V to V_l = 0.5 V)	—	2	nS
C3 [2]	CLKIN rise time (from V_l = 0.5 V to V_h = 2.4 V)	—	2	nS
C4	CLKIN duty cycle (measured at 1.5 V)	45	55	%
C4a [3]	CLKIN pulse-width high (measured at 1.5 V)	6.75	8.25	nS
C4b [3]	CLKIN pulse-width low (measured at 1.5 V)	6.75	8.25	nS

1 The clock period is referred to as T in the electrical specifications. The time for T is always in nS. Timing specifications can be given in terms of T. For example, 2T+5 nS

2 Specification values are not tested.

3 Specification values listed are for maximum frequency of operation.

Clock input and output timings listed in Table 23-6 are shown in Figure 23-1.

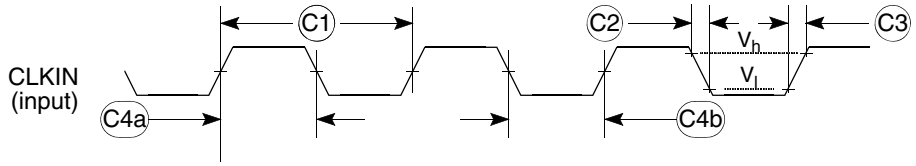

Figure 23-1. Clock Input Timing Diagram

23.3.2 Processor Bus Input Timing Specifications

Table 23-7 lists processor bus input timings.

NOTE

All processor bus timings are synchronous; that is, input setup/hold and output delay with respect to the rising edge of a reference clock. The reference clock is the SDCLK output.

All other timing relationships can be derived from these values.

Table 23-7. Processor Bus Input Timing Specifications

Name	Characteristic[1]	0–66 MHz		Unit
		Min	Max	
Control Inputs				
B1a [2]	$\overline{\text{RSTI}}$ valid to SDCLK (setup)	6.5	—	nS
B1b [2]	$\overline{\text{TA}}$ valid to SDCLK (setup)	8	—	nS
B1c [2]	$\overline{\text{TEA}}$ valid to SDCLK (setup)	8	—	nS
B1d [2]	$\overline{\text{INT}}$x valid to SDCLK (setup)	8	—	nS
B1e [2]	$\overline{\text{BKPT}}$ valid to PSTCLK (setup)	10	—	nS
B1f	Mode selects (BUSW[1:0], WSEL, $\overline{\text{HiZ}}$) valid to SDCLK (setup) (when $\overline{\text{RSTI}}$ asserted)	8	—	nS
B2d	SDCLK to asynchronous control inputs ($\overline{\text{RSTI}}$, $\overline{\text{TA}}$, $\overline{\text{TEA}}$, $\overline{\text{INT}}$x) invalid (hold)	2	—	nS
B2e	SDCLK to mode selects (BUSW[1,0], WSEL, $\overline{\text{HIZ}}$) invalid (hold) (when $\overline{\text{RSTI}}$ asserted)	2	—	nS
B2f	PSTCLK to asynchronous control input $\overline{\text{BKPT}}$ invalid (hold)	0	—	nS
B3	$\overline{\text{RSTI}}$ width low	10T	—	nS
Data Inputs				
B4	Data input (D[31:0]) valid to SDCLK (setup)	14	—	nS
B5	SDCLK to data input (D[31:0]) invalid (hold)	0	—	nS

1 All timing references to SDCLK are given to its rising edge when bit 3 of the SDRAM control register is 0.

2 $\overline{\text{RSTI}}$, $\overline{\text{TA}}$, $\overline{\text{TEA}}$, and $\overline{\text{INT}}$*x* are synchronized internally. The setup time must be met only if recognition is needed on a particular clock edge.

Timings listed in Table 23-7 are shown in Figure 23-2.

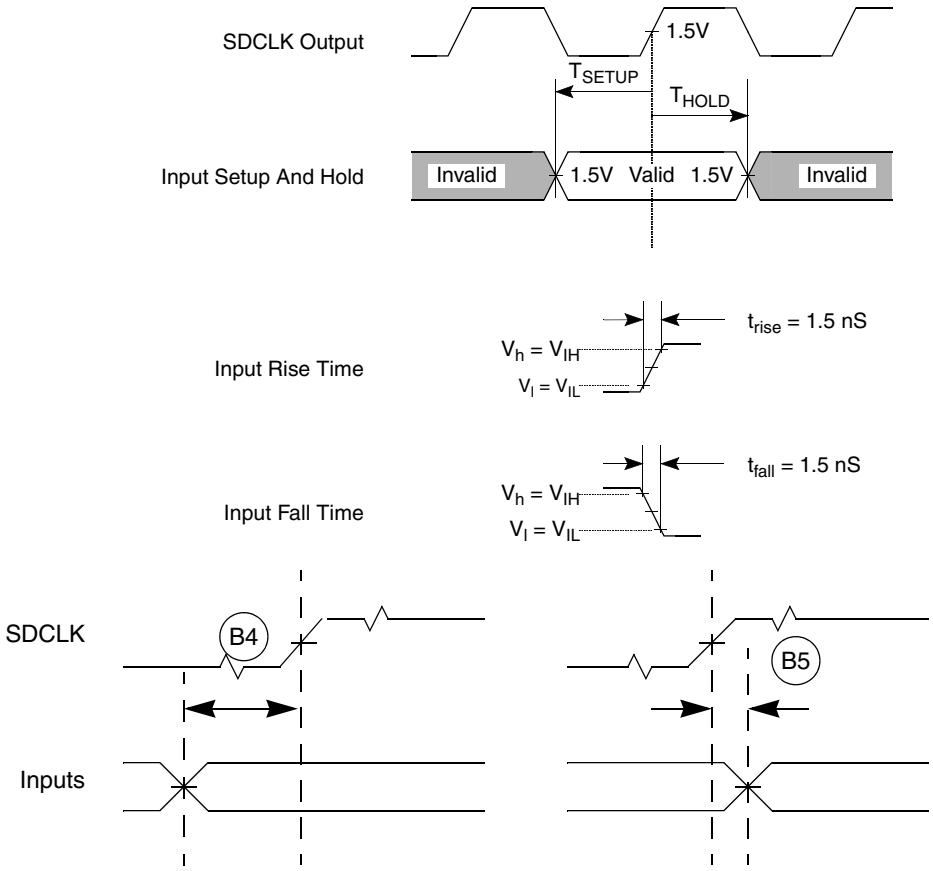

* The timings are also valid for inputs sampled on the negative clock edge.

Figure 23-2. General Input Timing Requirements

23.3.3 Processor Bus Output Timing Specifications

Table 23-8 lists processor bus output timings.

Table 23-8. Processor Bus Output Timing Specifications

Name	Characteristic [1]	0–66 MHz		Unit
		Min	Max	
Control Outputs				
B6a	SDCLK to chip selects ($\overline{CS}$[6:0]) valid	—	12	nS
B6b	SDCLK to byte enables ($\overline{BS}$[3:0]) valid	—	9.5	nS
B6c	SDCLK to output enable ($\overline{OE}$) valid	—	9.0	nS
B6d	SDCLK to write enable (R/$\overline{W}$) valid	—	8	nS
B6e	SDCLK to reset output ($\overline{RSTO}$) valid	—	13.5	nS
B7a	SDCLK to control output ($\overline{CS}$[6:0], $\overline{OE}$) invalid (output hold)	1.5	—	nS
B7b	SDCLK to control output ($\overline{BS}$[3:0], R/$\overline{W}$) invalid (output hold)	1.0	—	nS
B7c	SDCLK to reset output ($\overline{RSTO}$) invalid (output hold)	4	—	nS
Address and Attribute Outputs				
B8	SDCLK to address (A[22:0]) valid	—	13.0	nS
B9	SDCLK to address (A[22:0]) invalid (output hold)	1.5	—	nS
Data Outputs				
B11	SDCLK to data output (D[31:0]) valid	—	11	nS
B12[2]	SDCLK to data output (D[31:0]) invalid (output hold)	1	—	nS
B13	SDCLK to data output (D[31:0]) high impedance	—	6	nS

1 All timing references to SDCLK are given to its rising edge when bit 3 of the SDRAM control register is 0.

2 Data output is held valid for one CPU clock period after deassertion of BS[3:0]

NOTE

Above 48 MHz, the memory bus may need to be configured for one wait state. It is the responsibility of the user to determine the actual frequency at which to insert a wait state since this depends on the access time of SRAM or SDRAM used in a particular system implementation.

Wait states are inserted for SRAM accesses by programming bits 6–2 of the chip select option registers.

A wait state is added for SDRAM read accesses by setting bit 4 of the SDRAM control register.

Read/write SRAM bus timings listed in Table 23-8 are shown in Figure 23-3, Figure 23-4, Figure 23-5, and Figure 23-6.

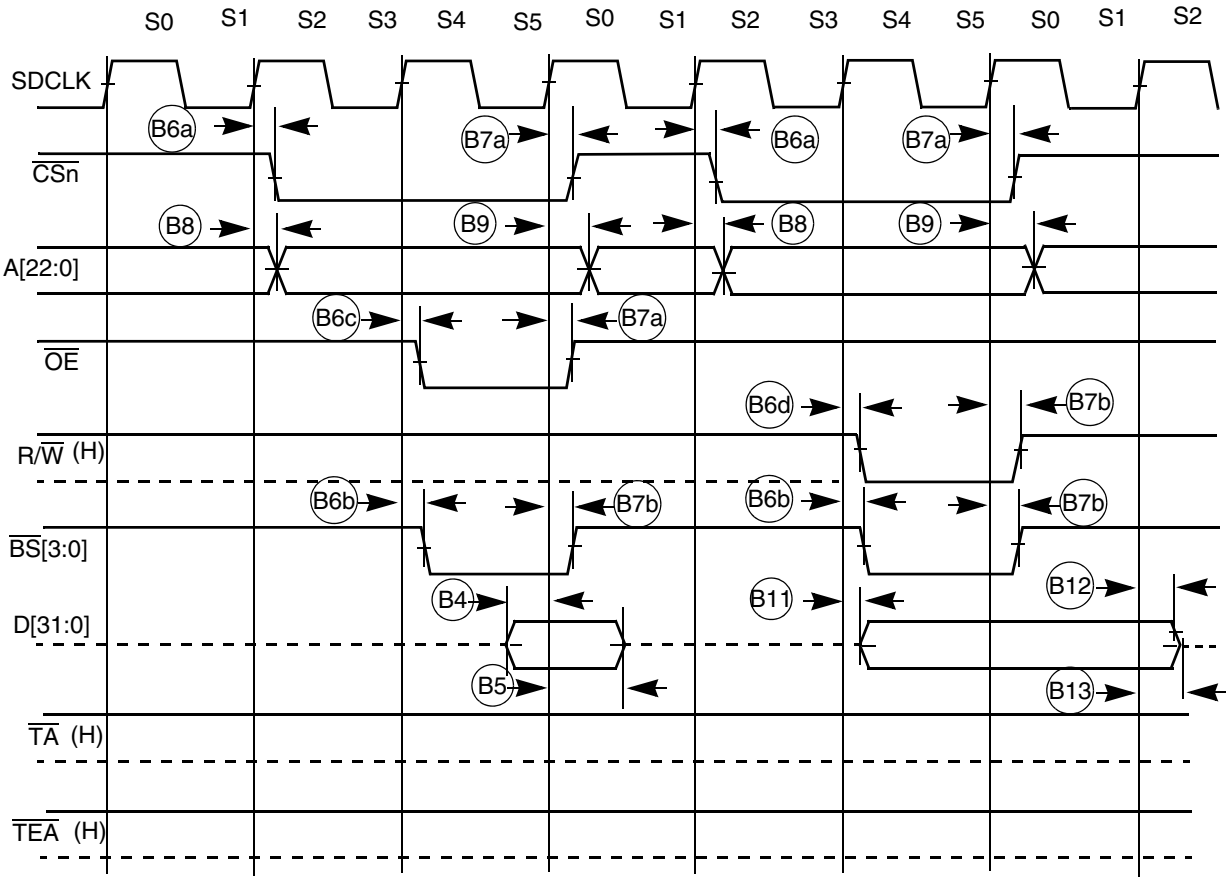

Figure 23-3. Read/Write SRAM Bus Timing

Figure 23-4 shows an SRAM bus cycle terminated by $\overline{TA}$ showing timings listed in Table 23-8.

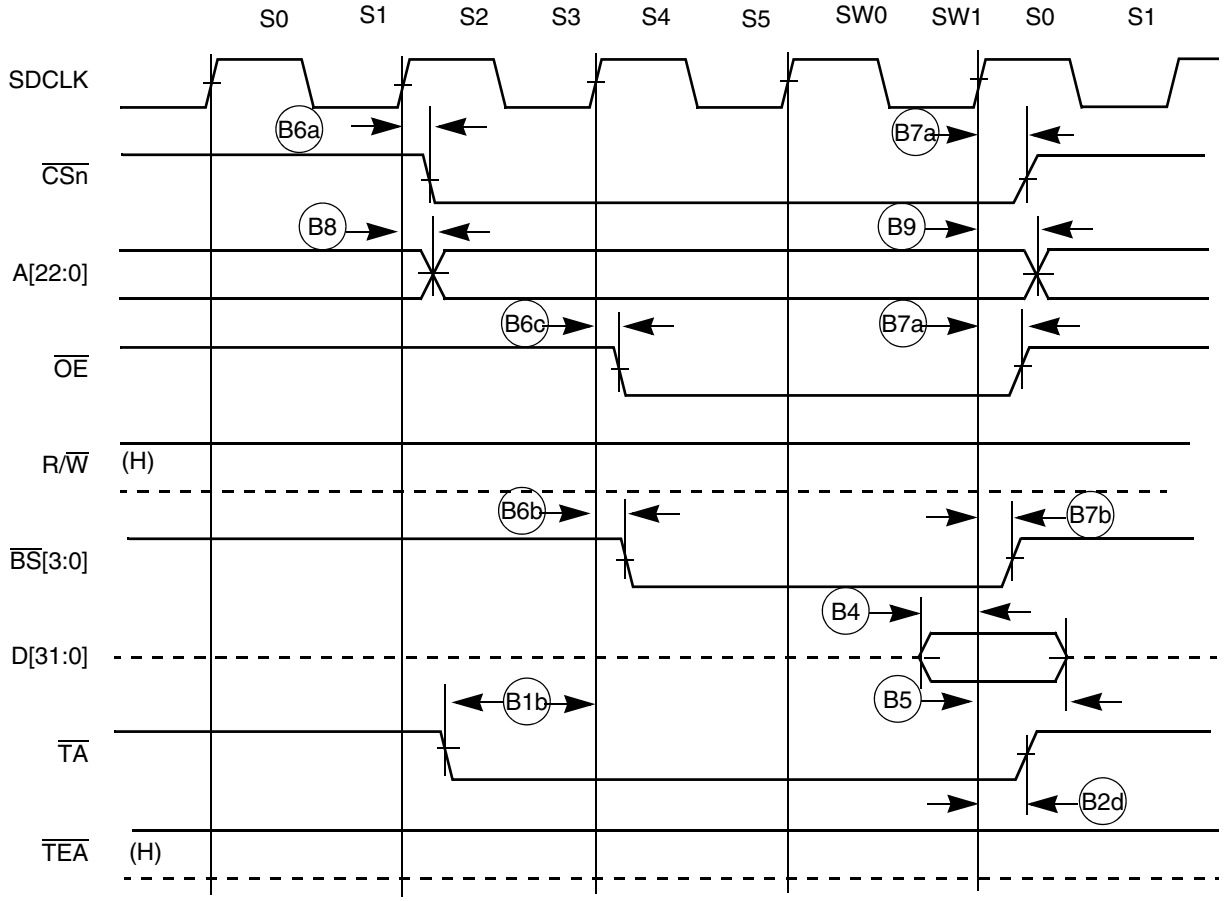

Figure 23-4. SRAM Bus Cycle Terminated by $\overline{TA}$

Figure 23-5 shows an SRAM bus cycle terminated by $\overline{\text{TEA}}$ showing timings listed in Table 23-8.

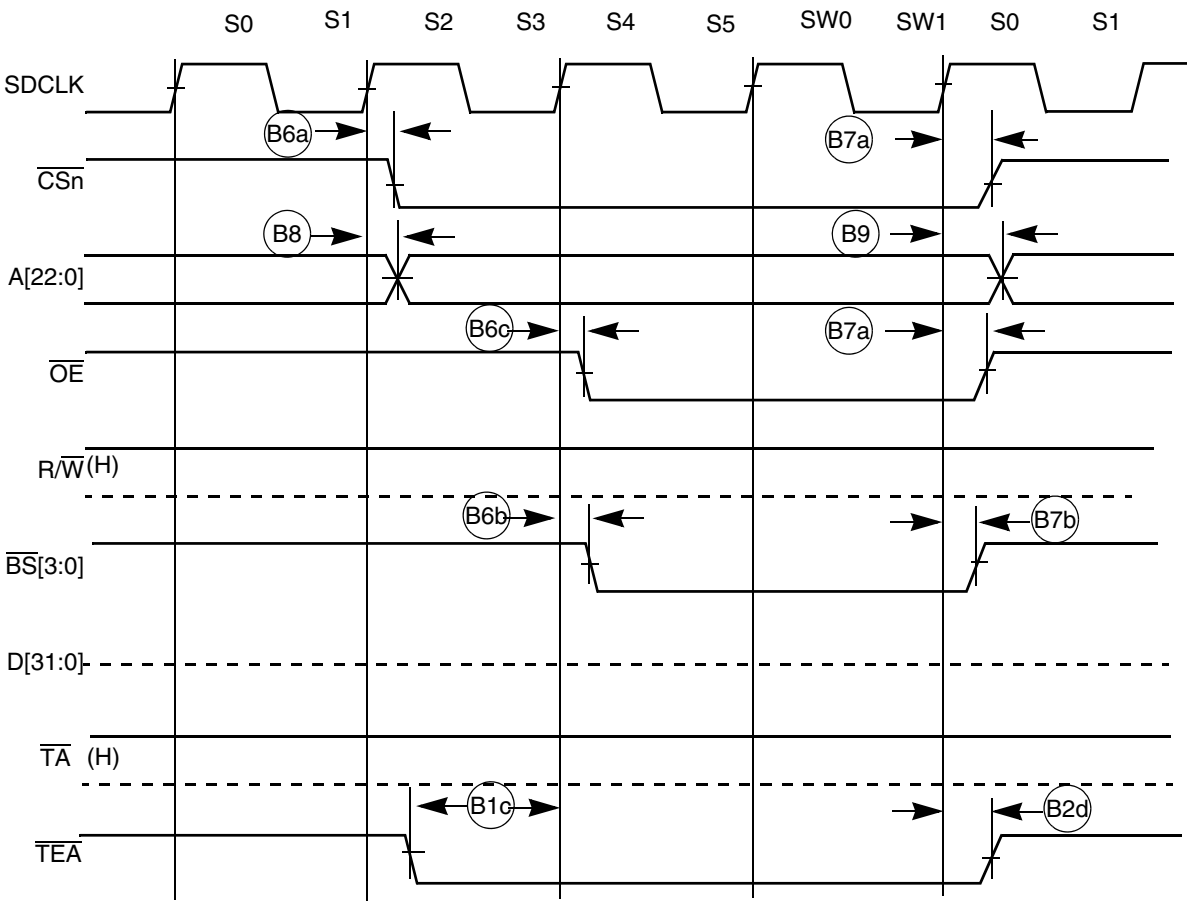

Figure 23-5. SRAM Bus Cycle Terminated by $\overline{\text{TEA}}$

Figure 23-6 shows reset and mode Select/HIZ configuration timing showing parameters listed in Table 23-8.

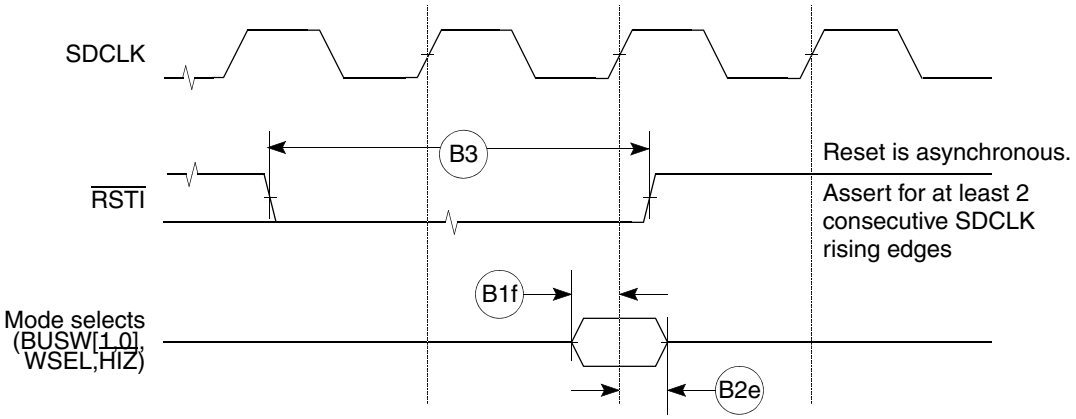

Figure 23-6. Reset and Mode Select/HIZ Configuration Timing

23.4 Debug AC Timing Specifications

Table 23-9 lists specifications for the debug AC timing parameters shown in Figure 23-8.

Table 23-9. Debug AC Timing Specification

Num	Characteristic	0-66 MHz		Units
		Min	Max	
D1	PST[3:0], DDATA[3:0] to PSTCLK valid	—	8.5	nS
D2	PSTCLK to PST[3:0], DDATA[3:0] hold	1	—	nS
D3	DSI-to-DSCLK setup	1	—	PSTCLKs
D4 [1]	DSCLK-to-DSO hold	4	—	PSTCLKs
D5	DSCLK cycle time	5	—	PSTCLKs

[1] DSCLK and DSI are synchronized internally. D4 is measured from the synchronized DSCLK input relative to the rising edge of PSTCLK.

Figure 23-7 shows real-time trace timing for the values in Table 23-9.

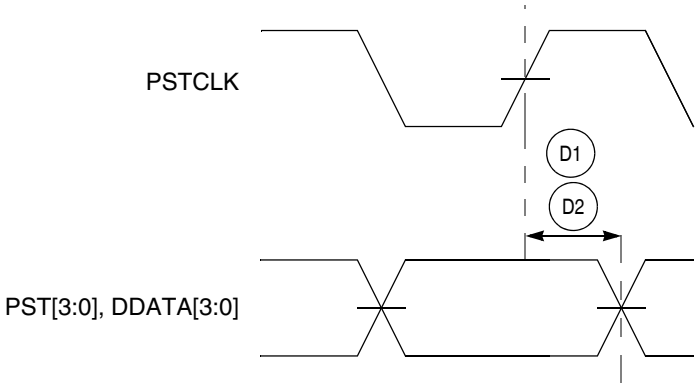

Figure 23-7. Real-Time Trace AC Timing

Figure 23-8 shows BDM serial port AC timing for the values in Table 23-9.

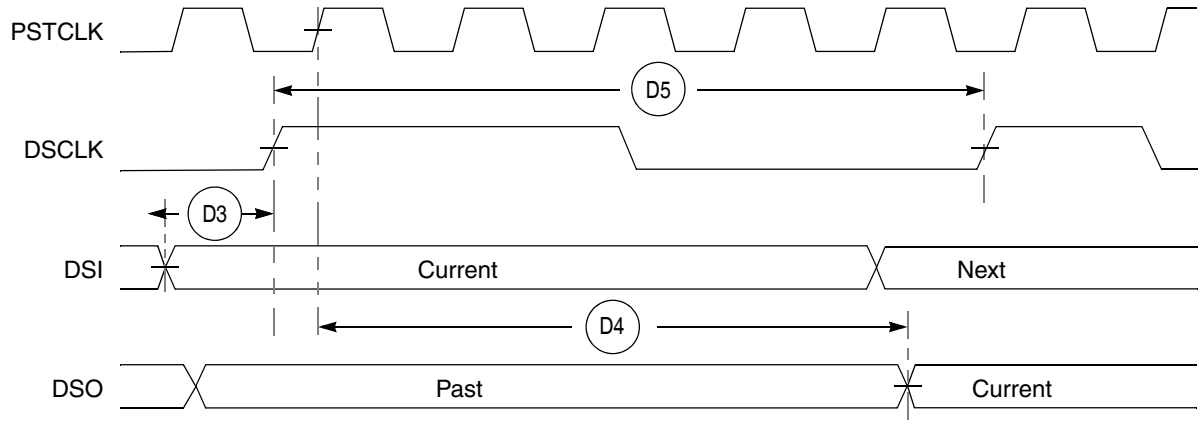

Figure 23-8. BDM Serial Port AC Timing

23.5 SDRAM Interface Timing Specifications

Table 23-10 lists SDRAM interface timings.

Table 23-10. SDRAM Interface Timing Specifications

Name	Characteristic [1]	0–66 MHz		Unit
		Min	Max	
Control Inputs				
SD1	SDCLK to address output A[22:0] valid	—	13.0	nS
SD2	SDCLK to address output A[22:0] invalid (output hold)	1	—	
SD3	SDCLK to $\overline{\text{DQM}}$[3:0] valid	—	9	nS
SD4	SDCLK to $\overline{\text{DQM}}$[3:0] invalid (output hold)	1.0	—	
SD5	SDCLK to data output (D[31:0]) valid (signal from driven or three-state)	—	13.0	nS
SD6	SDCLK to data output (D[31:0]) invalid (output hold)	1	—	
SD7	SDCLK to $\overline{\text{CAS0}}$, $\overline{\text{RAS0}}$, SDBA[1:0], $\overline{\text{SDCLKE}}$, $\overline{\text{SDRAMWE}}$, valid	—	7	nS
SD8	SDCLK to $\overline{\text{CAS0}}$, $\overline{\text{RAS0}}$, SDBA[1:0], $\overline{\text{SDCLKE}}$, $\overline{\text{SDRAMWE}}$, invalid (output hold)	1	—	
SD9	SDCLK to $\overline{\text{SDCS}}$ valid	—	8	nS
SD10	SDCLK to $\overline{\text{SDCS}}$ invalid (output hold)	1.0	—	
SD11	SDCLK to A10_PRECHG valid	—	9.5	
SD12	SDCLK to A10_PRECHG invalid (output hold)	1.0	—	
SD13	SDCLK to data output (D[31:0]) high impedance	—	6	nS
SD14	Data input (D[31:0]) valid to SDCLK (setup) (pipeline mode, SDRAM control register b4 = 1)	5.5	—	nS
SD15	Data input (D[31:0]) valid to SDCLK (setup) (straight-through mode, SDRAM control register b4 = 0)	13.0	—	nS
SD16	SDCLK to data input (D[31:0]) invalid (hold)	0	—	nS

[1] All timing references to SDCLK are given to its rising edge when bit 3 of the SDRAM control register is 0.

Figure 23-9 shows SDRAM timings listed in Table 23-10.

NOTE

Above 48 MHz, the memory bus may need to be configured for one wait state. It is the responsibility of the user to determine the actual frequency at which to insert a wait state since this depends on the access time of SRAM or SDRAM used in a particular system implementation.

Wait states are inserted for SRAM accesses by programming bits 6–2 of the chip select option registers.

A wait state is added for SDRAM read accesses by setting bit 4 of the SDRAM control register.

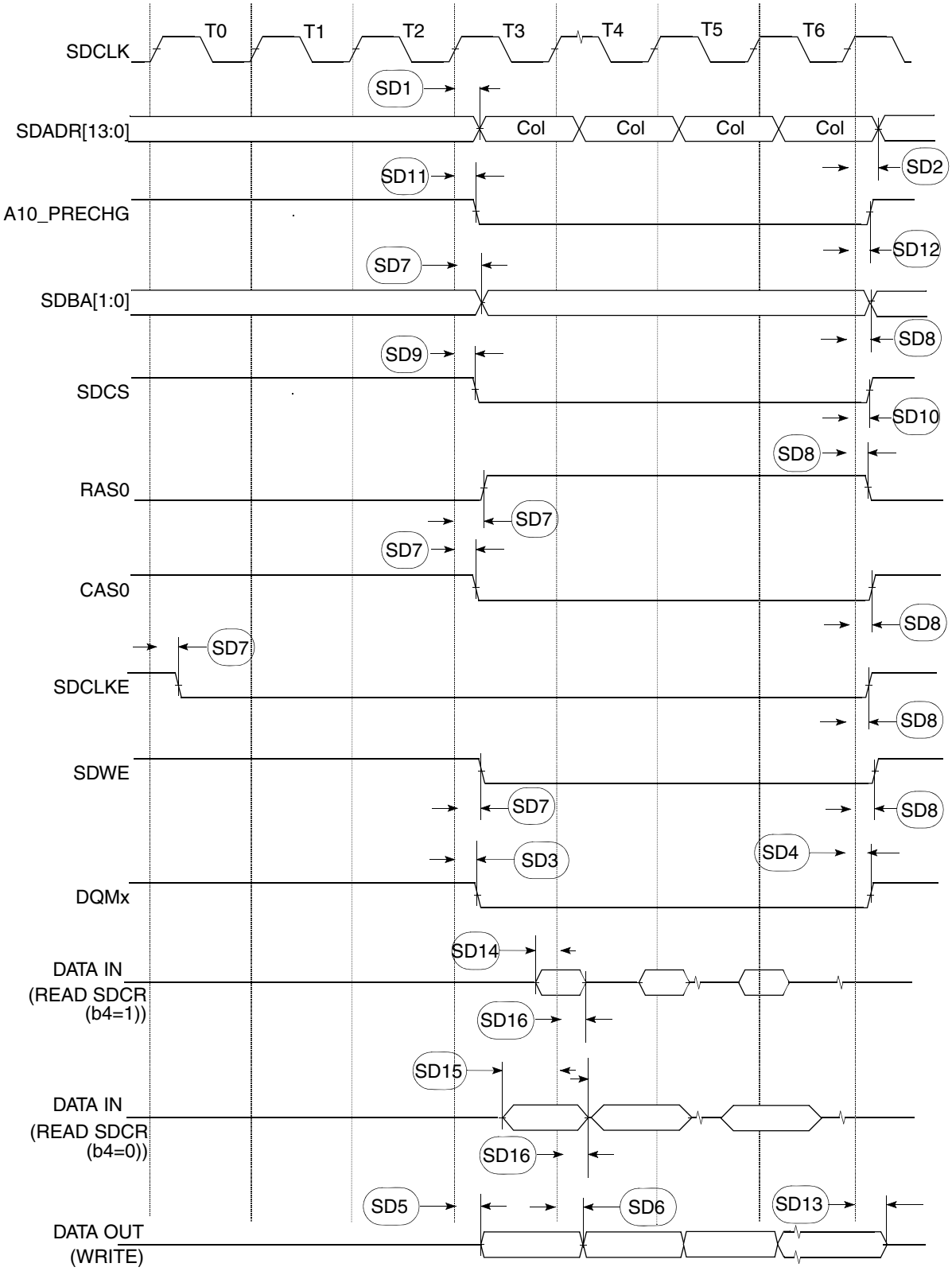

Figure 23-9. SDRAM Signal Timing

Figure 23-10 shows SDRAM self-refresh timings listed in Table 23-10.

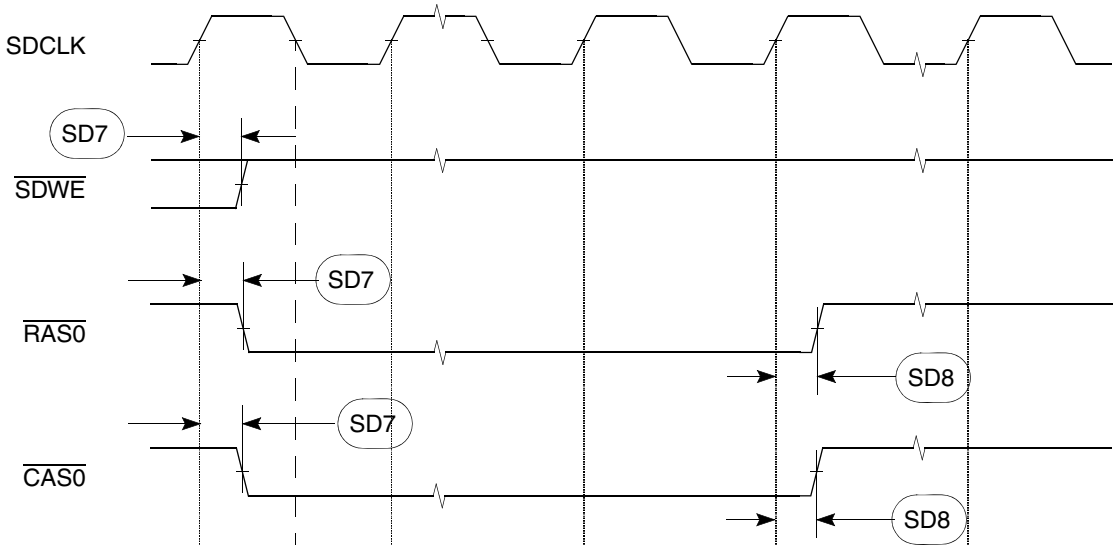

Figure 23-10. SDRAM Self-Refresh Cycle Timing

23.6 Fast Ethernet AC Timing Specifications

MII signals use TTL signal levels compatible with devices operating at either 5.0 V or 3.3 V.

23.6.1 MII Receive Signal Timing (E_RxD[3:0], E_RxDV, E_RxER, and E_RxCLK)

The receiver functions correctly up to a E_RxCLK maximum frequency of 25 MHz +1%. There is no minimum frequency requirement. In addition, the processor clock frequency must exceed twice the E_RxCLK frequency.

Table 23-11 lists MII receive channel timings.

Table 23-11. MII Receive Signal Timing

Num	Characteristic [1]	Min	Max	Unit
M1	E_RxD[3:0], E_RxDV, Rx_ERR to E_RxCLK setup	5	—	nS
M2	E_RxCLK to E_RxD[3:0], E_RxDV, Rx_ERR hold	5	—	nS
M3	E_RxCLK pulse-width high	35%	65%	E_RxCLK period
M4	E_RxCLK pulse-width low	35%	65%	E_RxCLK period

[1] E_RxDV, E_RxCLK, and E_RxD0 have same timing in 10 Mbit 7-wire interface mode.

Figure 23-11 shows MII receive signal timings listed in Table 23-11.

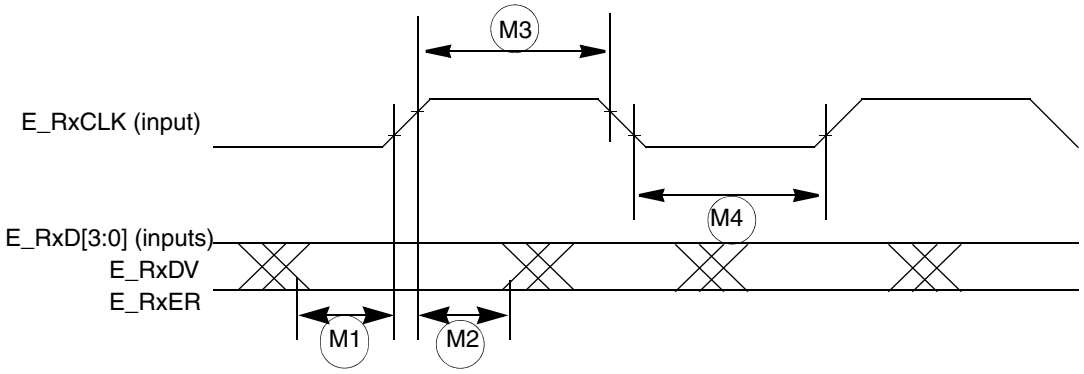

Figure 23-11. MII Receive Signal Timing Diagram

23.6.2 MII Transmit Signal Timing (E_TxD[3:0], E_TxEN, E_TxER, E_TxCLK)

Table 23-12 lists MII transmit channel timings.

The transmitter functions correctly up to a E_TxCLK maximum frequency of 25 MHz +1%. There is no minimum frequency requirement. In addition, the processor clock frequency must exceed twice the E_TxCLK frequency.

The transmit outputs (E_TxD[3:0], E_TxEN, E_TxER) can be programmed to transition from either the rising or falling edge of E_TxCLK, and the timing is the same in either case. This options allows the use of non-compliant MII PHYs.

Refer to the Ethernet chapter for details of this option and how to enable it.

Table 23-12. MII Transmit Signal Timing

Num	Characteristic[1]	Min	Max	Unit
M5	E_TxCLK to E_TxD[3:0], E_TxEN, E_TxER invalid	5	—	nS
M6	E_TxCLK to E_TxD[3:0], E_TxEN, E_TxER valid	—	25	nS
M7	E_TxCLK pulse-width high	35%	65%	E_TxCLK period
M8	E_TxCLK pulse-width low	35%	65%	E_TxCLK period

1 E_TxCLK, ETxD0, and E_TxEN have the same timing in 10 Mbit 7-wire interface mode.

Figure 23-12 shows MII transmit signal timings listed in Table 23-12.

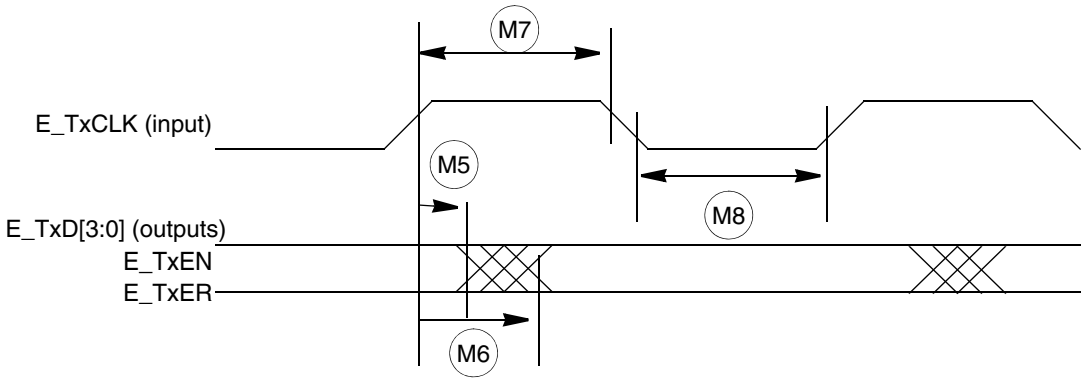

Figure 23-12. MII Transmit Signal Timing Diagram

23.6.3 MII Async Inputs Signal Timing (CRS and COL)

Table 23-13 lists MII asynchronous inputs signal timing.

Table 23-13. MII Async Inputs Signal Timing

Num	Characteristic	Min	Max	Unit
M9[1]	E_CRS, E_COL minimum pulse width	1.5	—	E_TxCLK period

1 E_COL has the same timing in 10 Mbit 7-wire interface mode.

Figure 23-13 shows MII asynchronous input timings listed in Table 23-13.



Figure 23-13. MII Async Inputs Timing Diagram

23.6.4 MII Serial Management Channel Timing (MDIO and MDC)

Table 23-14 lists MII serial management channel timings. The FEC functions correctly with a maximum MDC frequency of 2.5 MHz.

Table 23-14. MII Serial Management Channel Timing

Num	Characteristic	Min	Max	Unit
M10	MDC falling edge to MDIO output invalid (minimum propagation delay)	0	—	nS
M11	MDC falling edge to MDIO output valid (max prop delay)	—	25	nS
M12	MDIO (input) to MDC rising edge setup	10	—	nS
M13	MDIO (input) to MDC rising edge hold	0	—	nS
M14	MDC pulse-width high	40%	60%	MDC period
M15	MDC pulse-width low	40%	60%	MDC period

Figure 23-14 shows MII serial management channel timings listed in Table 23-14.

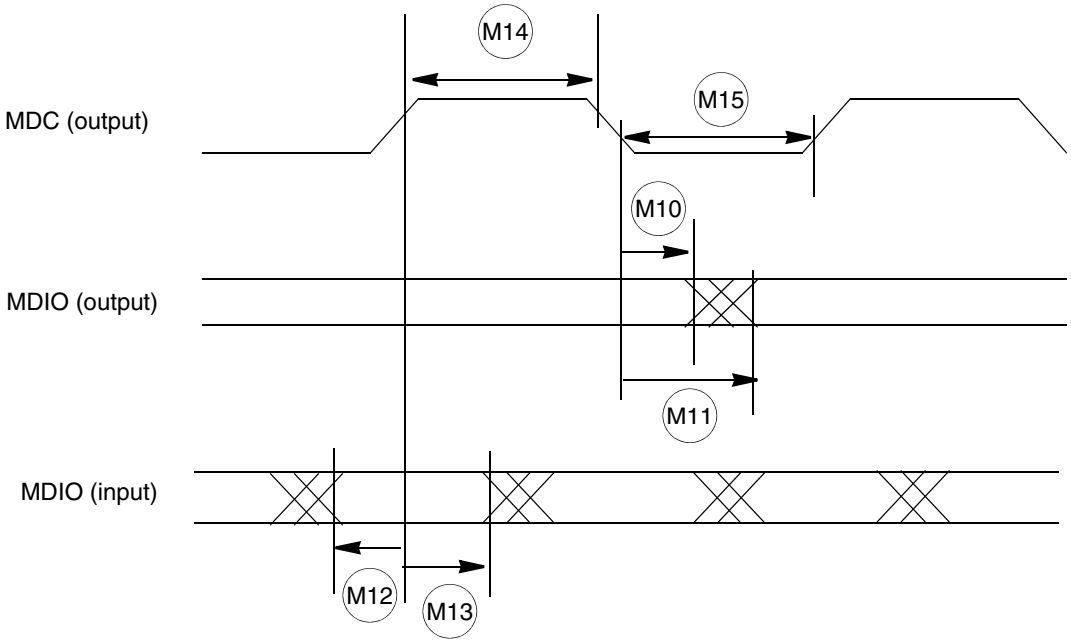

Figure 23-14. MII Serial Management Channel Timing Diagram

23.7 Timer Module AC Timing Specifications

Table 23-15 lists timer module AC timings.

Table 23-15. Timer Module AC Timing Specifications

Name	Characteristic [1]	0–66 MHz		Unit
		Min	Max	
T1	TIN1 cycle time	3T	—	nS
T2	TIN1 valid to SDCLK (setup)	6	—	nS
T3	SDCLK to TIN[1:0] invalid (hold)	0	—	nS
T4	TIN1 pulse width	1T	—	nS

[1] All timing references to SDCLK are given to its rising edge when bit 3 of the SDRAM control register is 0.

Figure 23-15 shows timer module timings listed in Table 23-15.

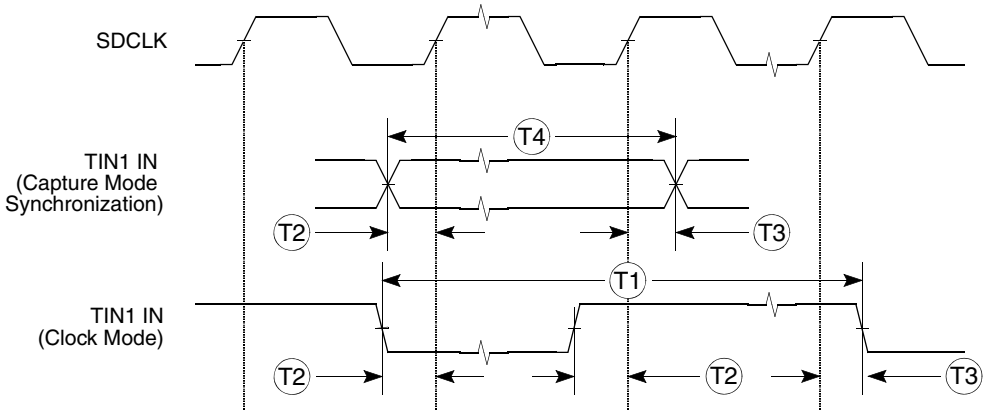

Figure 23-15. Timer Timing

23.8 UART Modules AC Timing Specifications

Table 23-16 lists UART AC timings.

Table 23-16. UART Modules AC Timing Specifications

Name	Characteristic [1]	0–66 MHz		Unit
		Min	Max	
UT1	URT*n*RxD valid to SDCLK (setup)	6	—	nS
UT2	SDCLK to URT*n*_RxD invalid (hold)	0	—	nS
UT3	$\overline{\text{URT}n\text{_CTS}}$ valid to SDCLK (setup)	6	—	nS
UT4	SDCLK to $\overline{\text{URT}n\text{_CTS}}$ invalid (hold)	0	—	nS
UT5	SDCLK to URT*n*_TxD valid	—	7	nS
UT6	SDCLK to URT*n*_TxD invalid (output hold)	3	—	nS
UT7	SDCLK to $\overline{\text{URT}n\text{_RTS}}$ valid	—	7	nS
UT8	SDCLK to $\overline{\text{URT}n\text{_RTS}}$ invalid (output hold)	3	—	nS

[1] All timing references to SDCLK are given to its rising edge when bit 3 of the SDRAM control register is 0.

Figure 23-16 shows UART module timings listed in Table 23-16.

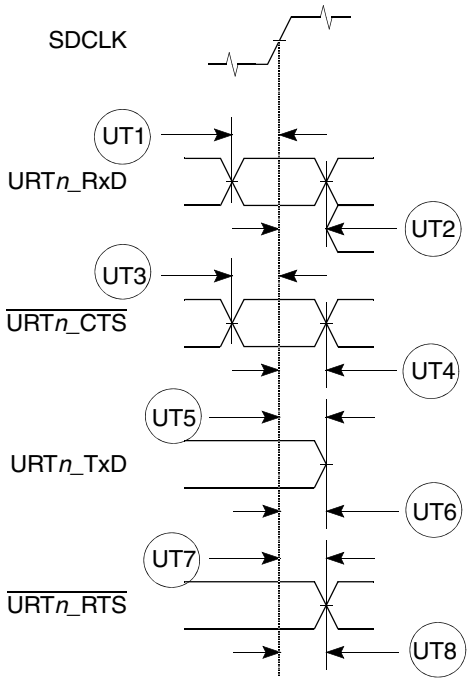

Figure 23-16. UART Timing

23.9 PLIC Module: IDL and GCI Interface Timing Specifications

Table 23-17 shows timing for IDL master mode, PLIC ports 1, 2, and 3.

Table 23-17. IDL Master Mode Timing, PLIC Ports 1, 2, and 3

Name	Characteristic	Min	Typ	Max	Unit
P1 [1, 2]	DFSC[1:3] period		125		µS
P2	Delay from rising edge of GDCL1_OUT to rising edge of DFSC[3:1]	—	—	20	nS
P3	Delay from rising edge of GDCL1_OUT to DFSC[3:1] Invalid (output Hold	2	—	—	nS
P4 [3, 2]	GDCL1_OUT clock period	20T	—	—	
P5 [4, 2]	GDCL1_OUT pulse-width high	45	50	55	% of period
P6 [4, 2]	GDCL1_OUT pulse-width low	45	50	55	% of period
P7	Delay from rising edge of GDCL1_OUT to Low-Z and valid data on DOUT[1,3]	—	—	30	nS
P8	Delay from rising edge of GDCL1_OUT to DOUT[3:1] Invalid (Output Hold)	2	—	—	nS
P9	Delay from rising edge of GDCL1_OUT to High-Z on DOUT[1,3]	—	—	30	nS
P10	Data valid on DIN[1:3] before falling edge of GDCL1_OUT (setup time)	25	—	—	nS
P11	Data valid on DIN[1:3] after falling edge of GDCL1_OUT (hold time)	25	—	—	nS

1 For most telecommunications applications the period should be set to 125 µS. Refer to clock generator planning in PLIC chapter.

2 Same as DCL0 and FSC0 if internal clock generator configured for pass-through mode.

3 GDCL1_OUT must be less than 1/20th of the CPU operating frequency. This is to ensure minimum jitter to CODECs that may be connected to Ports 1,2,3.

4 Based on generated GDCL1_OUT less than 1/20 of CPU clock frequency.

Figure 23-17 shows IDL master timings listed in Table 23-17.

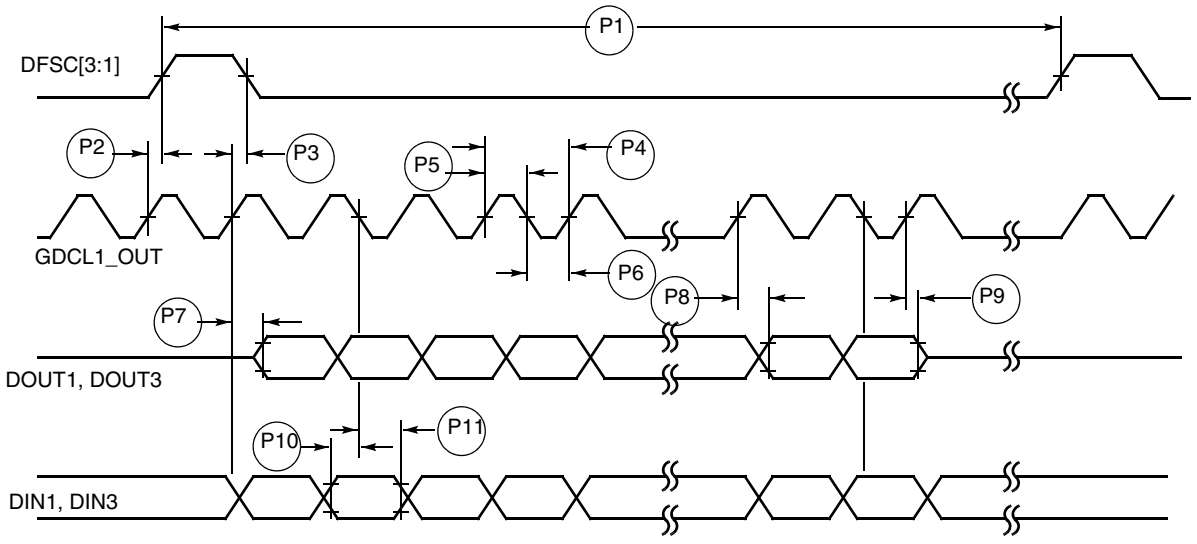

Figure 23-17. IDL Master Timing

Table 23-18 lists timing for IDL slave mode.

Table 23-18. IDL Slave Mode Timing, PLIC Ports 0–3

Name	Characteristic	Min	Typ	Max	Unit
P14 [1]	FSR0, FSR1 period	—	125	—	µs
P15a	FSR0 or FSC0 valid before the falling edge of DCL0 (setup time)	25	—	—	nS
P22	DCL clock frequency	256	—	4096	Khz
P23	DCL pulse-width high	45	—	55	% of DCL period
P24	DCL pulse-width low	45	—	55	% of DCL period
P15b	FSR1 or FSC1 valid before the falling edge of DCL1 (setup time)	25	—	—	nS
P16a	DCL0 to FSR0 or FSC0 input Invalid (hold time)	25	—	—	nS
P16b	DCL1 to FSR1 or FSC1 input Invalid (hold time)	25	—	—	nS
P17a	Delay from rising edge of DCL0 to low-z and valid data on DOUT0	—	—	30	nS
P17b	Delay from rising edge of DCL1 to low-z and valid data on DOUT1 and DOUT3	—	—	30	nS
P19a	Delay from rising edge of DCL0 to high-z on DOUT0	—	—	30	nS
P19b	Delay from rising edge of DCL1 to high-z on DOUT1 and DOUT3	—	—	30	nS
P20 [2]	Delay from rising edge of DCL1 to DFSC2, DFSC3 Invalid (output hold)	2	—	—	nS
P25	Data valid on DIN0 before falling edge of DCL0 (setup time)	25	—	—	nS
P25	Data valid on DIN1, DIN3 before falling edge of DCL1 (setup time)	25	—	—	nS
P26	Data valid on DIN0 after falling edge of DCL0 (hold time)	25	—	—	nS
P26	Data valid on DIN1, DIN3 after falling edge of DCL1 (hold time)	25	—	—	nS

1 FSR occurs on average every 125 µs.

2 In IDL slave mode, DCL may be any frequency multiple of 8 KHz between 256 KHz and 4.096 MHz inclusive.

Figure 23-18 shows IDL slave timings listed in Table 23-18.

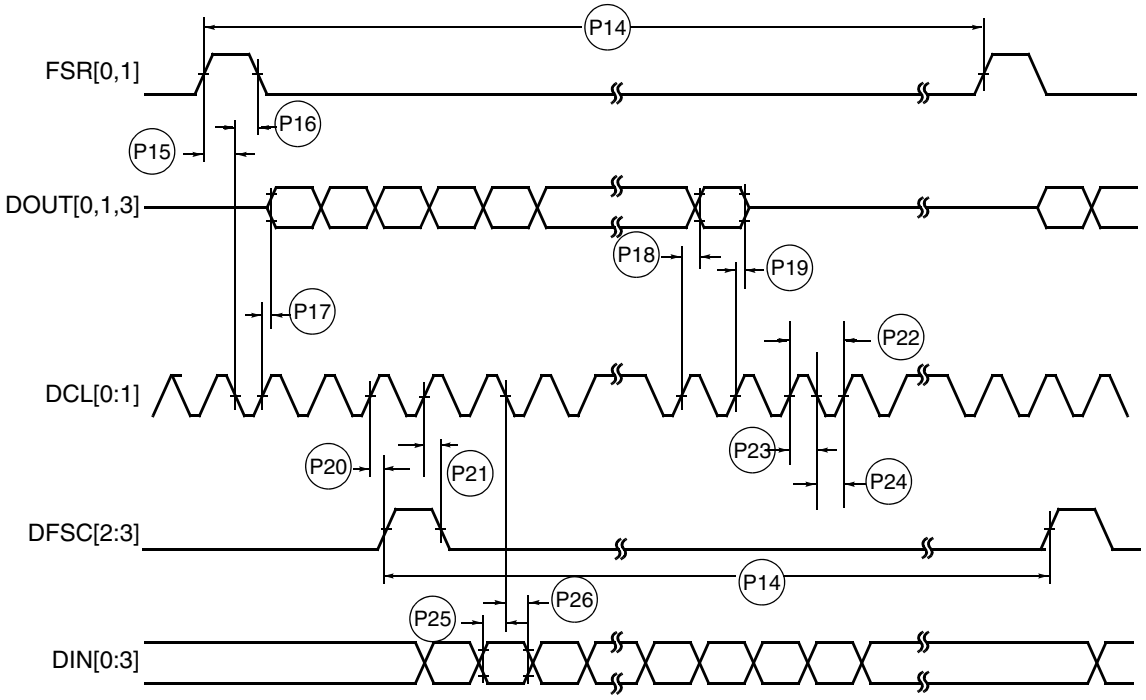

Figure 23-18. IDL Slave Timing

Table 23-19 lists timings for GCI slave mode.

Table 23-19. GCI Slave Mode Timing, PLIC Ports 0–3

Name	Characteristic	Min	Max	Unit
P30	FSC input high before the falling edge of DCL0, DCL1 (setup time)	25	—	nS
P31	FSC0 input low before the rising edge of DCL0 (deassertion setup time), FSC1 input low before the rising edge of DCL1 (deassertion setup time)	25		nS
P32	FSC0 input high after the falling edge of DCL0 (hold time), FSC1 input high after the falling edge of DCL1 (hold time)	25	—	nS
P33	DCL0, DCL1 clock frequency	—	8192	KHz
P34	DCL0, DCL1 pulse-width low	45	55	% of DCL period
P35	DCL0, DCL1 pulse-width high	45	55	% of DCL period
P38	Delay from rising edge of FSC0 to low-z and valid data on DOUT0 Delay from rising edge of FSC1 to low-z and valid data on DOUT1 Delay from rising edge of DFSC2 to low-z and valid data on DOUT1 Delay from rising edge of DFSC3 to low-z and valid data on DOUT1, DOUT3	—	30	nS
P39	Delay from rising edge of DCL0 to data valid on DOUT0, Delay from rising edge of DCL1 to data valid on DOUT1, DOUT3	—	30	nS
P40	Delay from rising edge of DCL0 to high-z on DOUT0, Delay from rising edge of DCL1 to high-Z on DOUT1, DOUT3	—	30	nS
P41	Data valid on DIN0 before rising edge of DCL0, Data valid on DIN1 or DIN3 before rising edge of DCL1	25	—	nS
P42	Data valid on DIN0 after rising edge of DCL0, Data valid on DIN1 or DIN3 after rising edge of DCL1	25	—	nS

Figure 23-19 shows GCI slave timings listed in Table 23-19.

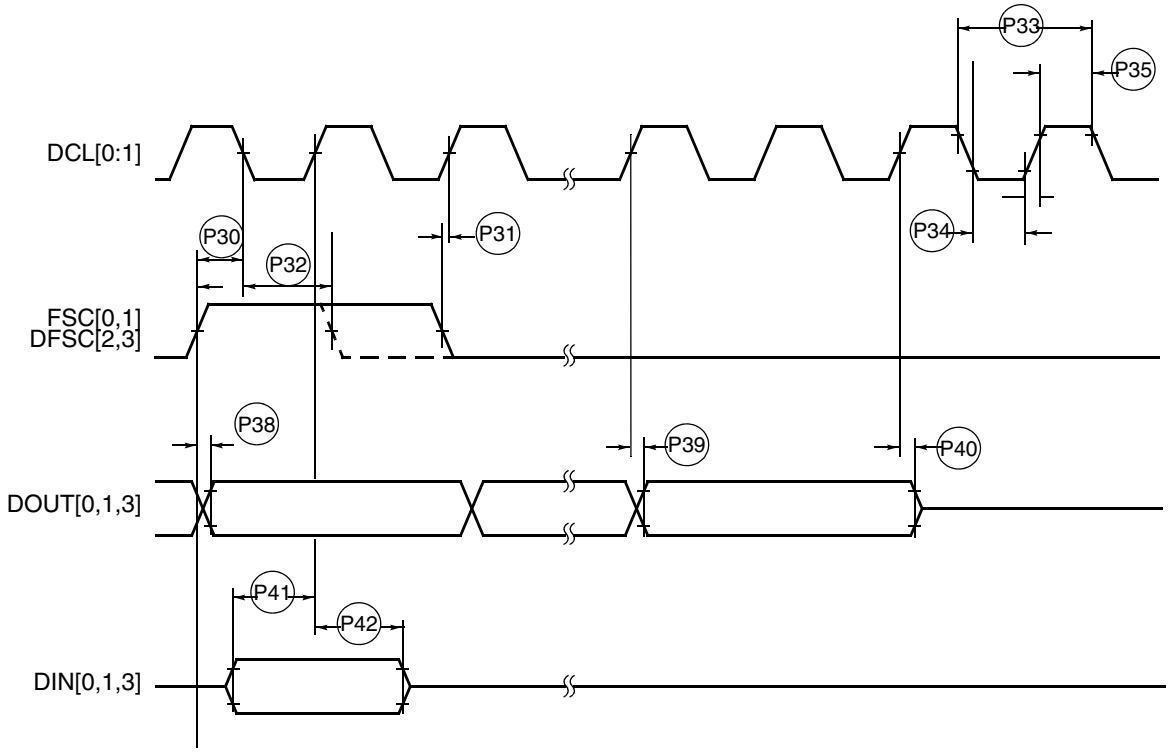

Figure 23-19. GCI Slave Mode Timing

Table 23-20 lists timings for GCI master mode.

Table 23-20. GCI Master Mode Timing, PLIC PORTs 1, 2, 3

Name	Characteristic	Min	Max	Unit	Name
P50 [1]	Delay from rising edge of GDCL1_OUT to rising edge of DFSC[1:3]	—	—	20	nS
P51 [1]	Delay from rising edge of GDCL1_OUT to falling edge of DFSC[1:3]	—	—	20	nS
P52 [2,3]	GDCL1_OUT clock period	20T	—	—	nS
P53 [2,4]	GDCL1_OUT pulse-width low	45	50	55	% of period
P54 [2,4]	GDCL1_OUT pulse-width high	45	50	55	% of period
P57	Delay from rising edge of GDCL1_OUT to Low-Z and valid data on DOUT[1,3]	—	—	30	nS
P58	Delay from rising edge of GDCL1_OUT to data valid on DOUT[1,3]	—	—	30	nS
P59	Delay from rising edge of GDCL1_OUT to High-Z on DOUT[1,3]	—	—	30	nS
P60	Data valid on DIN[1:3] before rising edge of GDCL1_OUT (setup time)	25	—	—	nS
P61	Data valid on DIN[1:3] after rising edge of GDCL1_OUT (hold time)	25	—	—	nS

1 For most telecommunications applications the period of DFSC[1:3] should be set to 125 µS. Refer to clock generator planning in PLIC chapter.

2 GDCL1_OUT must be less than 1/20th of the CPU operating frequency to ensure minimum jitter to CODECs connected to Ports 1, 2, 3.

3 Same as DCL0 and FSC0 if internal clock generator configured for pass-through mode.

4 Based on generated GDCL1_OUT less than 1/20 of CPU clock frequency.

Figure 23-20 shows GCI master timings listed in Table 23-20.

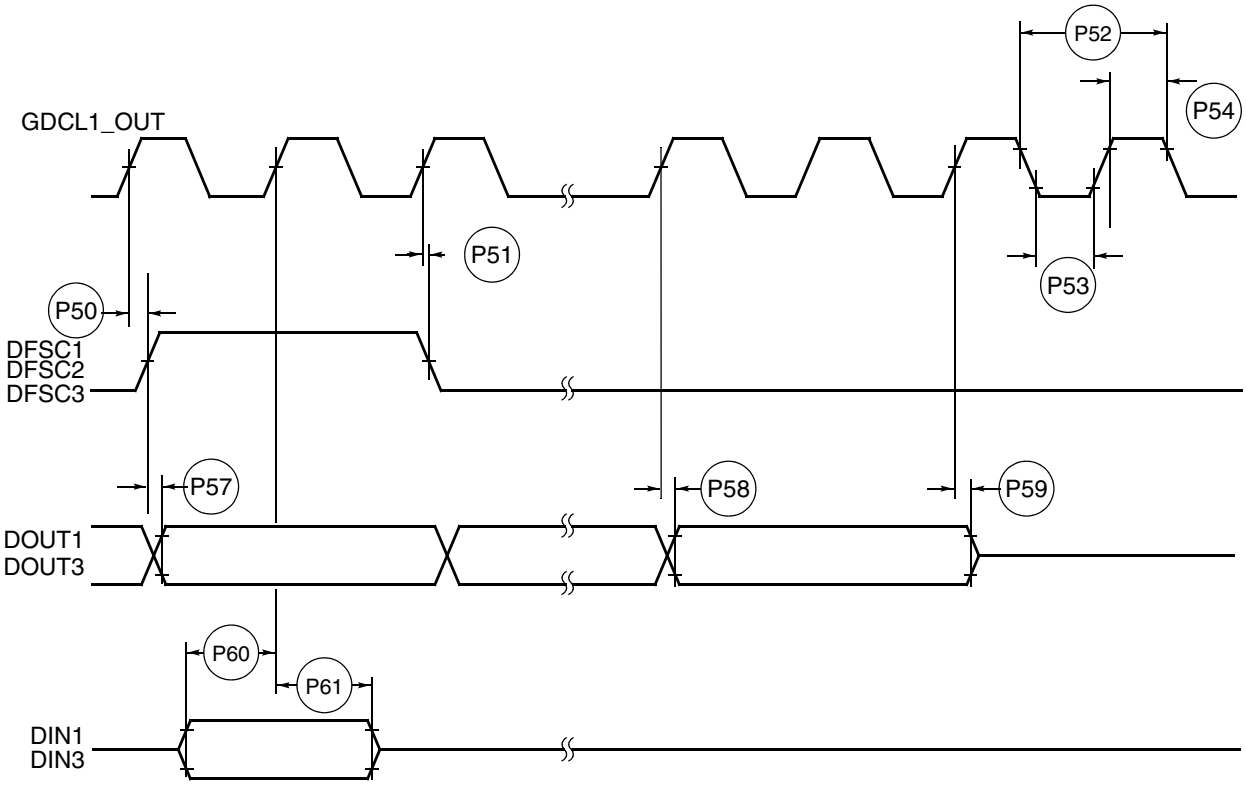

Figure 23-20. GCI Master Mode Timing

23.10 General-Purpose I/O Port AC Timing Specifications

Table 23-21 lists GPIO port timings.

Table 23-21. General-Purpose I/O Port AC Timing Specifications

Name	Characteristic [1]	0–66 MHz		Unit
		Min	Max	
G1	PORTx input setup time to SDCLK (rising)	6	—	nS
G2	PORTx input hold time from SDCLK (rising)	0	—	nS
G3	SDCLK to PORTx output valid	—	11.5	nS
G4	SDCLK to PORTx output invalid (output hold)	1	—	nS

[1] All timing references to SDCLK are given to its rising edge when bit 3 of the SDRAM control register is 0.

Figure 23-21 shows GPIO timings listed in Table 23-21.

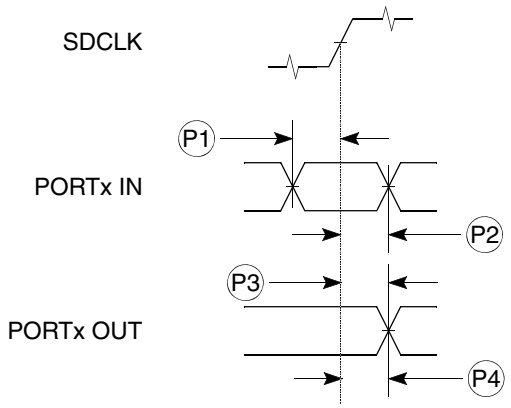

Figure 23-21. General-Purpose I/O Port Timing

23.11 USB Interface AC Timing Specifications

Table 23-22 lists USB interface timings.

Table 23-22. USB Interface AC Timing Specifications

Name	Characteristic	48-66 MHz		Unit
		Min	Max	
US1	USB_CLK frequency of operation [1]	48	48	MHz
US2 [2]	USB_CLK fall time (from V_h = 2.4V to V_l = 0.5V)	—	2	nS
US3 [2]	USB_CLK rise time (from V_l = 0.5V to V_h = 2.4V)	—	2	nS
US4	USB_CLK duty cycle (measured at 1.5 V)	45	55	%
US5	USB Inputs (USB_RP, USB_RN, USB_RxD) setup time to USB_CLK (rising)	6	—	nS
US6	USB Inputs (USB_RP, USB_RN, USB_RxD) hold time from USB_CLK (rising)	6	—	nS
US7	USB_CLK to USB outputs valid (USB_TP, USB_TN, USB_SUSP, USB_TxEN)	—	12	nS
US8	USB_CLK to USB outputs invalid (output hold) (USB_TP, USB_TN, USB_SUSP, USB_TxEN)	3	—	nS

1 USB_CLK accuracy should be +- 500ppm or better. USB_CLK may be stopped to conserve power.

2 Specification values are not tested.

NOTE

USB signals are sampled; setup and hold times are not normally required in a transceiver connection.

Figure 23-22 shows USB timings listed in Table 23-22.

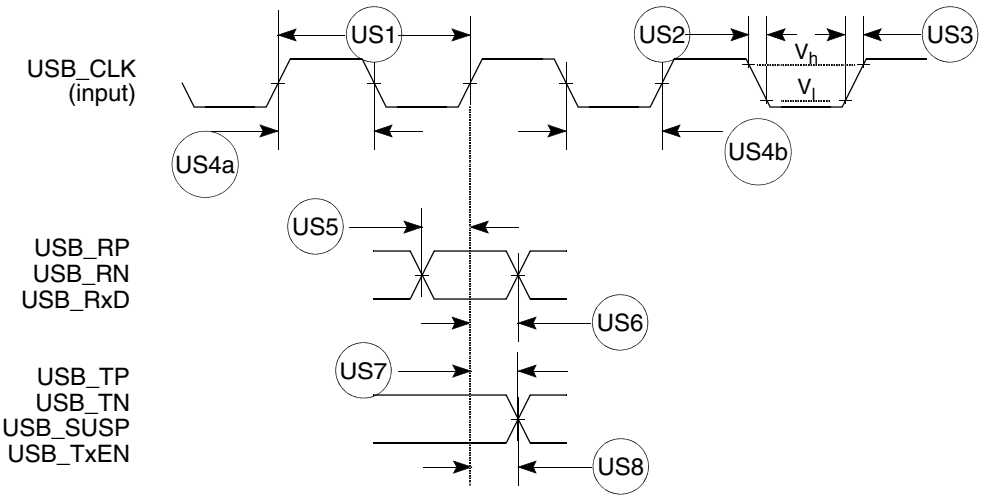

Figure 23-22. USB Interface Timing

23.12 IEEE 1149.1 (JTAG) AC Timing Specifications

Table 23-23 lists JTAG timings.

Table 23-23. IEEE 1149.1 (JTAG) AC Timing Specifications

Name	Characteristic	0–66 MHz		Unit
		Min	Max	
—	TCK frequency of operation	0	10	MHz
J1	TCK cycle time	100	—	nS
J2a	TCK clock pulse high width measured at 1.5 V	40	—	nS
J2b	TCK clock pulse low width measured at 1.5 V	40	—	nS
J3a	TCK fall time (from V_h = 2.4 V to V_l = 0.5 V)	—	5	nS
J3b	TCK rise time (from V_l = 0.5 V to V_h = 2.4 V)	—	5	nS
J4	TDI, TMS to TCK rising (setup)	10	—	nS
J5	TCK rising edge to TDI, TMS invalid (hold)	15	—	nS
J6	Boundary scan data valid to TCK rising edge (setup)	10	—	nS
J7	Boundary scan data invalid to TCK rising edge (hold)	15	—	nS
J8	$\overline{\text{TRST}}$ pulse-width (asynchronous to clock edges)	15	—	nS
J9	TCK falling edge to TDO valid (signal from driven or three-state)	—	30	nS
J10	TCK falling edge to TDO high impedance	—	30	nS
J11	TCK falling edge to boundary scan data valid (signal from driven or three-state)	—	35	nS
J12	TCK falling edge to boundary scan data high impedance	—	35	nS

Figure 23-23 shows JTAG timings listed in Table 23-23.

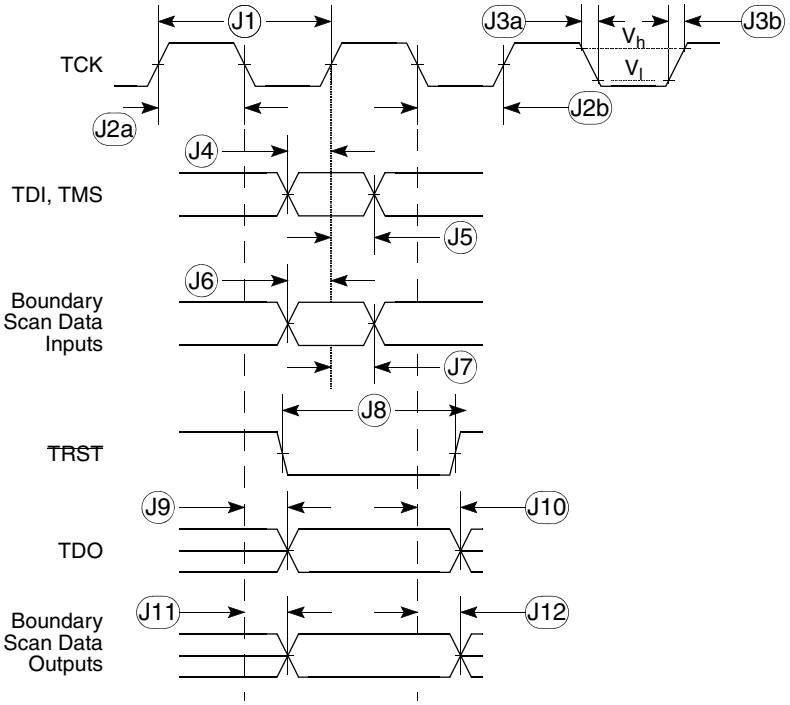

Figure 23-23. IEEE 1149.1 (JTAG) Timing

23.13 QSPI Electrical Specifications

Table 23-24 lists QSPI timings.

Table 23-24. QSPI Modules AC Timing Specifications

Name	Characteristic	0–66 MHz		Unit
		Min	Max	
QS1	QSPI_CS[3:0] to QSPI_CLK	1T[1]	127T[1]	nS
QS2	QSPI_CLK high to QSPI_DOUT valid.	—	20	nS
QS3	QSPI_CLK high to QSPI_DOUT invalid. (Output hold)	0	—	nS
QS4	QSPI_DIN to QSPI_CLK (Input setup)	10	—	nS
QS5	QSPI_DIN to QSPI_CLK (Input hold)	10	—	nS

1 T is defined as clock period in nS. See Table 23-6.

The values in Table 23-24 correspond to Figure 23-24.

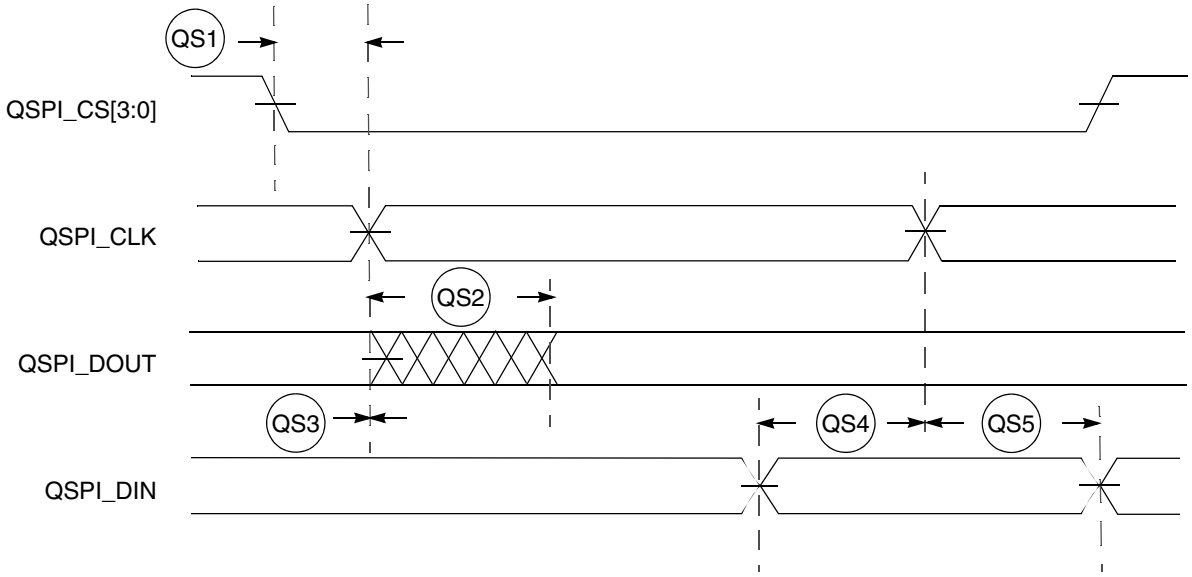

Figure 23-24. QSPI Timing

23.14 PWM Electrical Specifications

Table 23-25 lists PWM timings.

Table 23-25. PWM Modules AC Timing Specifications

Name	Characteristic [1]	0–66 MHz		Unit
		Min	Max	
PW1 [2]	SDLCK high to PWM_OUT[2:0] valid, high or low.	—	11	nS
PW2 [2]	SDLCK high to PWM_OUT[2:0] invalid. (Output hold)	2.5	—	nS

1 All timing references to SDCLK are given to its rising edge when bit 3 of the SDRAM control register is 0.

2 Parameter tested

The values in Table 23-25 correspond to Figure 23-25.

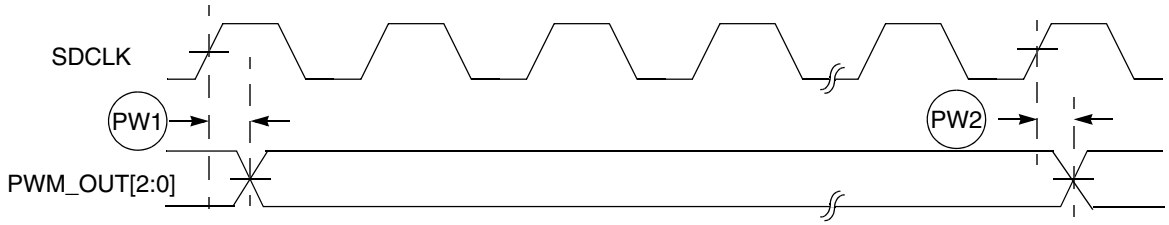

Figure 23-25. PWM Timing

Appendix A
List of Memory Maps

The MCF5272 memory map is given in this section.

The addresses for the system configuration registers are absolute addresses in the MCF5272 CPU space memory map. The on-chip peripheral modules are configured as a group by programming the module base address register, (MBAR).

In the title block for each module is shown the offset address of the given register from the base address programmed in MBAR.

The following formula allows calculation of the absolute address of a given register.

Absolute address = MBAR + register offset

A.1 List of Memory Map Tables

Table A-1. On-Chip Module Base Address Offsets from MBAR

Module	Module Base Address	Mnemonic
Configuration Registers	MBAR+0x0000	CFG_Base
Interrupt Registers	MBAR+0x0020	INT_Base
Chip Select Registers	MBAR+0x0040	CS_Base
Ports Registers	MBAR+0x0080	GPIO_Base
QSPI Module Registers	MBAR+0x00A0	QSPI_Base
PWM Module Registers	MBAR+0x00C0	PWM_Base
DMA Module Registers	MBAR+0x00E0	DMAC_Base
UART0 Module Registers	MBAR+0x0100	UART0_Base
UART1 Module Registers	MBAR+0x0140	UART1_Base
SDRAM Controller Registers	MBAR+0x0180	SDRAMC_Base
Timer Module Registers	MBAR+0x0200	Timer_Base
PLIC Module Registers	MBAR+0x0300	PLIC_Base
Ethernet Module Registers	MBAR+0x0800	ENET_Base
USB Module Registers	MBAR+0x1000	USB_Base

Table A-2. CPU Space Registers Memory Map

CPU SPACE ADDRESS	NAME	Size	SYSTEM CONFIGURATION REGISTERS	Program Access	Debug Access
0x0002	(CACR)	32	Cache Control Register	MOVEC	RCREG, WCREG
0x0004	(ACR0)	32	Cache Access Control Register 0	MOVEC	RCREG, WCREG
0x0005	(ACR1)	32	Cache Access Control Register 1	MOVEC	RCREG, WCREG
0x008x	A7:A0	32	Address registers A7:A0	MOVE	RAREG, WAREG
0x008x	D7:D0	32	Data registers D7:D0	MOVE	RDREG, WDREG
0x0801	(VBR)	32	Vector Base Register	MOVEC	RCREG, WCREG
0x080E	CCR	8	Condition Code Register (Debug only)	MOVE to/from CCR	RCREG, WCREG
0x080F	PC	32	Program Counter (Debug only)		RCREG, WCREG
0x0C00	ROMBAR	32	ROM Base Address Register	MOVEC	RCREG, WCREG
0x0C04	RAMBAR	32	SRAM Base Address Register	MOVEC	RCREG, WCREG
0x0C0F	MBAR	32	Module Base Address Register	MOVEC	

NOTE

MBAR must only be written using the MOVEC instruction. Writing to address MBAR+0x0000 causes unpredictable device operation.

Table A-3. On-Chip Peripherals and Configuration Registers Memory Map

MBAR Offset	[31:24]	[23:16]	[15:8]	[7:0]
0x0000	Module Base Address Register, Read Only (MBAR)			
0x0004	System Configuration Register (SCR)		Reserved	
0x0006	Reserved		System Protection Register (SPR)	
0x0008	Power Management Register (PMR)			
0x000E	Reserved		Activate Low Power Register (ALPR)	
0x0010	Device Identification Register (DIR)			

Table A-4. Interrupt Control Register Memory Map

MBAR Offset	[31:24]	[23:16]	[15:8]	[7:0]
0x0020	Interrupt Control Register 1 (ICR1)			
0x0024	Interrupt Control Register 2 (ICR2)			
0x0028	Interrupt Control Register 3 (ICR3)			
0x002C	Interrupt Control Register 4 (ICR4)			
0x0030	Interrupt Source Register (ISR)			
0x0034	Programmable Interrupt Transition Register (PITR)			
0x0038	Programmable Interrupt Wakeup Register (PIWR)			
0x003F	Reserved			Programmable Interrupt Vector Register (PIVR)

Table A-5. Chip Select Register Memory Map

MBAR Offset	[31:24]	[23:16]	[15:8]	[7:0]
0x0040	CS Base Register 0 (CSBR0)			
0x0044	CS Option Register 0 (CSOR0)			
0x0048	CS Base Register 1 (CSBR1)			
0x004C	CS Option Register 1 (CSOR1)			
0x0050	CS Base Register 2 (CSBR2)			
0x0054	CS Option Register 2 (CSOR2)			
0x0058	CS Base Register 3 (CSBR3)			
0x005C	CS Option Register 3 (CSOR3)			
0x0060	CS Base Register 4 (CSBR4)			
0x0064	CS Option Register 4 (CSOR4)			
0x0068	CS Base Register 5 (CSBR5)			
0x006C	CS Option Register 5 (CSOR5)			
0x0070	CS Base Register 6 (CSBR6)			
0x0074	CS Option Register 6 (CSOR6)			
0x0078	CS Base Register 7 (CSBR7)			
0x007C	CS Option Register 7 (CSOR7)			

Table A-6. GPIO Port Register Memory Map

MBAR Offset	[31:24]	[23:16]	[15:8]	[7:0]
0x0080	Port A Control Register (PACNT)			
0x0084	Port A Data Direction Register (PADDR)		Reserved	
0x0086	Reserved		Port A Data Register (PADAT)	
0x0088	Port B Control Register (PBCNT)			
0x008C	Port B Data Direction Register (PBDDR)		Reserved	
0x008E	Reserved		Port B Data Register (PBDAT)	
0x0094	Port C Data Direction Register (PCDDR)		Reserved	
0x0096	Reserved		Port C Data Register (PCDAT)	
0x0098	Port D Control Register (PDCNT)			

Table A-7. QSPI Module Memory Map

MBAR Offset	[31:24]	[23:16]	[15:8]	[7:0]
0x00A0	QSPI Mode Register (QMR)		Reserved	
0x00A4	QSPI Delay Register (QDLYR)		Reserved	
0x00A8	QSPI Wrap Register (QWR)		Reserved	
0x00AC	QSPI Interrupt Register (QIR)		Reserved	
0x00B0	QSPI Address Register (QAR)		Reserved	
0x00B4	QSPI Data Register (QDR)		Reserved	

Table A-8. PWM Module Memory Map

MBAR Offset	[31:24]	[23:16]	[15:8]	[7:0]
0x00C0	PWM Control Register 1 (PWCR1)	Reserved		
0x00C4	PWM Control Register 2 (PWCR2)	Reserved		
0x00C8	PWM Control Register 3 (PWCR3)	Reserved		
0x00D0	PWM Pulse-Width Register 1 (PWWD1)	Reserved		
0x00D4	PWM Pulse-Width Register 2 (PWWD2)	Reserved		
0x00D8	PWM Pulse-Width Register 3 (PWWD3)	Reserved		

Table A-9. DMA Module Memory Map

MBAR Offset	[31:24]	[23:16]	[15:8]	[7:0]
0x00E0	DMA Mode Register (DCMR)			
0x00E6			DMA Interrupt Register (DCIR)	
0x00E8	DMA Byte Count Register (DBCR)			
0x00EC	DMA Source Address Register (DSAR)			
0x00F0	DMA Destination Address Register (DDAR)			

Table A-10. UART0 Module Memory Map

MBAR Offset	[31:24]	[23:16]	[15:8]	[7:0]
0x0100	UART0 Mode Register 1/2 (U0MR1/U0MR2)	Reserved		
0x0104	UART0 Status (U0SR)	Reserved		
0x0104	UART0 Clock Select Register (U0CSR)	Reserved		
0x0108	UART0 Command Register (U0CR)	Reserved		
0x010C	UART0 Receive Buffer (U0RxB)	Reserved		
0x010C	UART0 Transmit Buffer (U0TxB)	Reserved		
0x0110	UART0 CTS Change Register (U0CCR)	Reserved		
0x0110	UART0 Auxiliary Control Register (U0ACR)	Reserved		
0x0114	UART0 Interrupt Status Register (U0ISR)	Reserved		
0x0114	UART0 Interrupt Mask Register (U0IMR)	Reserved		
0x0118	UART0 Baud Prescaler MSB (U0BG1)	Reserved		
0x011C	UART0 Baud Prescaler LSB (U0BG2)	Reserved		
0x0120	UART0 AutoBaud MSB Register (U0ABR1)	Reserved		
0x0124	UART0 AutoBaud LSB Register (U0ABR2)	Reserved		
0x0128	UART0 TxFIFO Control/Status Register (U0TxFCSR)	Reserved		
0x012C	UART0 RxFIFO Control/Status Register (U0RxFCSR)	Reserved		
0x130	UART0 Fractional Precision Divider Control Registers (UFPDn)	Reserved		
0x0134	UART0 CTS Unlatched Input (U0IP)	Reserved		
0x0138	UART0 RTS O/P Bit Set Command Register (U0OP1)	Reserved		
0x013C	UART0 RTS O/P Bit Reset Command Register (U0OP0)	Reserved		

Table A-11. UART1 Module Memory Map

MBAR Offset	[31:24]	[23:16]	[15:8]	[7:0]
0x0140	UART1 Mode Register 1/2 (U1MR1/U1MR2)	Reserved		
0x0144	UART1 Status (U1SR)	Reserved		
0x0144	UART1 Clock Select Register (U1CSR)	Reserved		
0x0148	UART1 Command Register (U1CR)	Reserved		
0x014C	UART1 Receive Buffer (U1RxB)	Reserved		
0x014C	UART1 Transmit Buffer (U1TxB)	Reserved		
0x0150	UART1 CTS Change Register (U1CCR)	Reserved		
0x0150	UART1 Auxiliary Control Register (U1ACR)	Reserved		
0x0154	UART1 Interrupt Status Register (U1ISR)	Reserved		
0x0154	UART1 Interrupt Mask Register (U1IMR)	Reserved		
0x0158	UART1 Baud Prescaler MSB (U1BG1)	Reserved		
0x015C	UART1 Baud Prescaler LSB (U1BG2)	Reserved		
0x0160	UART1 AutoBaud MSB Register (U1ABR1)	Reserved		
0x0164	UART1 AutoBaud LSB Register (U1ABR2)	Reserved		
0x0168	UART1 TxFIFO Control/Status Register (U1TxFCSR)	Reserved		
0x016C	UART1 RxFIFO Control/Status Register (U1RxFCSR)	Reserved		
0x170	UART1 Fractional Precision Divider Control Registers (UFPDn)	Reserved		
0x0174	UART1 CTS Unlatched Input (U1IP)	Reserved		
0x0178	UART1 RTS O/P Bit Set Command Register (U1OP1)	Reserved		
0x017C	UART1 RTS O/P Bit Reset Command Register (U1OP0)	Reserved		

Table A-12. SDRAM Controller Memory Map

MBAR Offset	[31:24]	[23:16]	[15:8]	[7:0]
0x0180	Reserved		SDRAM Configuration Register (SDCR)	
0x0184	Reserved		SDRAM Timing Register (SDTR)	

Table A-13. Timer Module Memory Map

MBAR Offset	[31:24]	[23:16]	[15:8]	[7:0]
0x0200	Timer 0 Mode Register (TMR0)		Reserved	
0x0204	Timer 0 Reference Register (TRR0)		Reserved	
0x0208	Timer 0 Capture Register (TCAP0)		Reserved	
0x020C	Timer 0 Counter Register (TCN0)		Reserved	
0x0210	Timer 0 Event Register (TER0)		Reserved	
0x0220	Timer 1 Mode Register (TMR1)		Reserved	
0x0224	Timer 1 Reference Register (TRR1)		Reserved	
0x0228	Timer 1 Capture Register (TCAP1)		Reserved	
0x022C	Timer 1 Counter Register (TCN1)		Reserved	
0x0230	Timer 1 Event Register (TER1)		Reserved	
0x0240	Timer 2 Mode Register (TMR2)		Reserved	
0x0244	Timer 2 Reference Register (TRR2)		Reserved	
0x0248	Timer 2 Capture Register (TCAP2)		Reserved	
0x024C	Timer 2 Counter Register (TCN2)		Reserved	
0x0250	Timer 2 Event Register (TER2)		Reserved	
0x0260	Timer 3 Mode Register (TMR3)		Reserved	
0x0264	Timer 3 Reference Register (TRR3)		Reserved	
0x0268	Timer 3 Capture Register (TCAP3)		Reserved	
0x026C	Timer 3 Counter Register (TCN3)		Reserved	
0x0270	Timer 3 Event Register (TER3)		Reserved	
0x0280	Watchdog Reset Reference Register (WRRR)		Reserved	
0x0284	Watchdog Interrupt Reference Register (WIRR)		Reserved	
0x0288	Watchdog Counter Register (WCR)		Reserved	
0x028C	Watchdog Event Register (WER)		Reserved	

Table A-14. PLIC Module Memory Map

MBAR Offset	[31:24]	[23:16]	[15:8]	[7:0]
0x0300	Port0 B1 Data Receive (P0B1RR)			
0x0304	Port1 B1 Data Receive (P1B1RR)			
0x0308	Port2 B1 Data Receive (P2B1RR)			
0x030C	Port3 B1 Data Receive (P3B1RR)			
0x0310	Port0 B2 Data Receive (P0B2RR)			
0x0314	Port1 B2 Data Receive (P1B2RR)			
0x0318	Port2 B2 Data Receive (P2B2RR)			
0x031C	Port3 B2 Data Receive (P3B2RR)			
0x0320	Port 0 D Data Receive (P0DRR)	Port 1 D Data Receive (P1DRR)	Port 2 D Data Receive (P2DRR)	Port 3 D Data Receive (P3DRR)
0x0328	Port0 B1 Data Transmit (P0B1TR)			
0x032C	Port1 B1 Data Transmit (P1B1TR)			
0x0330	Port2 B1 Data Transmit (P2B1TR)			
0x0334	Port3 B1 Data Transmit (P3B1TR)			
0x0338	Port0 B2 Data Transmit (P0B2TR)			
0x033C	Port1 B2 Data Transmit (P1B2TR)			
0x0340	Port2 B2 Data Transmit (P2B2TR)			
0x0344	Port3 B2 Data Transmit (P3B2TR)			
0x0348	Port 0 D Data Transmit (P0DTR)	Port 1 D Data Transmit (P1DTR)	Port 2 D Data Transmit (P2DTR)	Port 3 D Data Transmit (P3DTR)
0x0350	Port0 GCI/IDL Configuration Register (P0CR)		Port1 GCI/IDL Configuration Register (P1CR)	
0x0354	Port2 GCI/IDL Configuration Register (P2CR)		Port3 GCI/IDL Configuration Register (P3CR)	
0x0358	Port0 Interrupt Configuration Register (P0ICR)		Port1 Interrupt Configuration Register (P1ICR)	
0x035C	Port2 Interrupt Configuration Register (P2ICR)		Port3 Interrupt Configuration Register (P3ICR)	
0x0360	Port0 GCI Monitor RX (P0GMR)		Port1 GCI Monitor RX (P1GMR)	
0x0364	Port2 GCI Monitor RX (P2GMR)		Port3 GCI Monitor RX (P3GMR)	
0x0368	Port0 GCI Monitor TX (P0GMT)		Port1 GCI Monitor TX (P1GMT)	
0x036C	Port2 GCI Monitor TX (P2GMT)		Port3 GCI Monitor TX (P3GMT)	
0x0370	Reserved	GCI Monitor TX Status (PGMTS)	GCI Monitor TX abort (PGMTA)	Reserved
0x0374	Port0 GCI C/I RX (P0GCIR)	Port1 GCI C/I RX (P1GCIR)	Port2 GCI C/I RX (P2GCIR)	Port3 GCI C/I RX (P3GCIR)
0x0378	Port0 GCI C/I TX (P0GCIT)	Port1 GCI C/I TX (P1GCIT)	Port2 GCI C/I TX (P2GCIT)	Port3 GCI C/I TX (P3GCIT)
0x037C	Reserved			GCI C/I TX Status (PGCITSR)
0x0383	Reserved			GCI D-Channel Status (PDCSR)
0x0384	Port0 Periodic Status (P0PSR)		Port1 Periodic Status (P1PSR)	
0x0388	Port2 Periodic Status (P2PSR)		Port3 Periodic Status (P3PSR)	

Table A-14. PLIC Module Memory Map (continued)

MBAR Offset	[31:24]	[23:16]	[15:8]	[7:0]
0x038C	Aperiodic Interrupt Status Register (PASR)		Reserved	Loop back Control (PLCR)
0x0392	Reserved		D Channel Request (PDRQR)	
0x0394	Port0 Sync Delay (P0SDR)		Port1 Sync Delay (P1SDR)	
0x0398	Port2 Sync Delay (P2SDR)		Port3 Sync Delay (P3SDR)	
0x039C	Reserved		Clock Select (PCSR)	

Table A-15. Ethernet Module Memory Map

MBAR Offset	[31:24]	[23:16]	[15:8]	[7:0]
0x0840	Ethernet Control Register (ECR)			
0x0844	Ethernet Interrupt Event Register (EIR)			
0x0848	Ethernet Interrupt Mask Register (EIMR)			
0x084C	Ethernet Interrupt Vector Status (IVSR)			
0x0850	Ethernet Rx Ring Updated Flag (RDAR)			
0x0854	Ethernet Tx Ring Updated Flag (TDAR)			
0x0880	Ethernet MII Data Register (MMFR)			
0x0884	Ethernet MII Speed Register (MSCR)			
0x08CC	Ethernet Receive Bound Register (FRBR)			
0x08D0	Ethernet Rx FIFO Start Address (FRSR)			
0x08E4	Transmit FIFO Watermark (TFWR)			
0x08EC	Ethernet Tx FIFO Start Address (TFSR)			
0x0944	Ethernet Rx Control Register (RCR)			
0x0948	Maximum Frame Length Register (MFLR)			
0x0984	Ethernet Tx Control Register (TCR)			
0x0C00	Ethernet Address (Lower) (MALR)			
0x0C04	Ethernet Address (Upper) (MAUR)			
0x0C08	Ethernet Hash Table (Upper) (HTUR)			
0x0C0C	Ethernet Hash Table (Lower) (HTLR)			
0x0C10	Ethernet Rx Descriptor Ring (ERDSR)			
0x0C14	Ethernet Tx Descriptor Rin (ETDSR)			
0x0C18	Ethernet Rx Buffer Size (EMRBR)			
0x0C40–0x0DFF	FIFO RAM (EFIFO)			

Table A-16. USB Module Memory Map

MBAR Offset	[31:24]	[23:16]	[15:8]	[7:0]
0x1002	Reserved		USB Frame Number Register (FNR)	
0x1006	Reserved		USB Frame Number Match Register (FNMR)	
0x100A	Reserved		USB Real-time Frame Monitor Register (RFMR)	
0x100E	Reserved		USB Real-time Frame Monitor Match Register (RFMMR)	
0x1013	Reserved			USB Function Address Register (FAR)
0x1014	USB Alternate Setting Register (ASR)			
0x1018	USB Device Request Data1 Register (DRR1)			
0x101C	USB Device Request Data2 Register (DRR2)			
0x1022	Reserved		USB Specification Number Register (SPECR)	
0x1026	Reserved		USB Endpoint 0 Status Register (EP0SR)	
0x1028	USB Endpoint 0 IN Config Register (IEP0CFG)			
0x102C	USB Endpoint 0 OUT Config Register (OEP0CFG)			
0x1030	USB Endpoint 1 Configuration Register (EP1CFG)			
0x1034	USB Endpoint 2 Configuration Register (EP2CFG)			
0x1038	USB Endpoint 3 Configuration Register (EP3CFG)			
0x103C	USB Endpoint 4 Configuration Register (EP4CFG)			
0x1040	USB Endpoint 5 Configuration Register (EP5CFG)			
0x1044	USB Endpoint 6 Configuration Register (EP6CFG)			
0x1048	USB Endpoint 7 Configuration Register (EP7CFG)			
0x104C	USB Endpoint 0 Control Register (EP0CTL)			
0x1052	Reserved		USB Endpoint 1 Control Register (EP1CTL)	
0x1056	Reserved		USB Endpoint 2 Control Register (EP2CTL)	
0x105A	Reserved		USB Endpoint 3 Control Register (EP3CTL)	
0x105E	Reserved		USB Endpoint 4 Control Register (EP4CTL)	
0x1062	Reserved		USB Endpoint 5 Control Register (EP5CTL)	
0x1066	Reserved		USB Endpoint 6 Control Register (EP6CTL)	
0x106A	Reserved		USB Endpoint 7 Control Register (EP7CTL)	
0x106C	USB General/Endpoint 0 Interrupt Status Register (EP0ISR)			
0x1092	Reserved		USB Endpoint 1 Interrupt Status Register (EP1ISR)	
0x1096	Reserved		USB Endpoint 2 Interrupt Status Register (EP2ISR)	
0x109A	Reserved		USB Endpoint 3 Interrupt Status Register (EP3ISR)	
0x109E	Reserved		USB Endpoint 4 Interrupt Status Register (EP4ISR)	
0x10A2	Reserved		USB Endpoint 5 Interrupt Status Register (EP5ISR)	
0x10A6	Reserved		USB Endpoint 6 Interrupt Status Register (EP6ISR)	
0x10AA	Reserved		USB Endpoint 7 Interrupt Status Register (EP7ISR)	

Table A-16. USB Module Memory Map (continued)

MBAR Offset	[31:24]	[23:16]	[15:8]	[7:0]
0x108C	USB Endpoint 0 Interrupt Mask Register (EP0IMR)			
0x1090	Reserved		USB Endpoint 1 Interrupt Mask Register (EP1IMR)	
0x1094	Reserved		USB Endpoint 2 Interrupt Mask Register (EP2IMR)	
0x1098	Reserved		USB Endpoint 3 Interrupt Mask Register (EP3IMR)	
0x109C	Reserved		USB Endpoint 4 Interrupt Mask Register (EP4IMR)	
0x10A0	Reserved		USB Endpoint 5 Interrupt Mask Register (EP5IMR)	
0x10A4	Reserved		USB Endpoint 6 Interrupt Mask Register (EP6IMR)	
0x10A8	Reserved		USB Endpoint 7 Interrupt Mask Register (EP7IMR)	
0x10AC	USB Endpoint 0 Data Register (EP0DR)			
0x10B0	USB Endpoint 1 Data Register (EP1DR)			
0x10B4	USB Endpoint 2 Data Register (EP2DR)			
0x10B8	USB Endpoint 3 Data Register (EP3DR)			
0x10BC	USB Endpoint 4 Data Register (EP4DR)			
0x10C0	USB Endpoint 5 Data Register (EP5DR)			
0x10C4	USB Endpoint 6 Data Register (EP6DR)			
0x10C8	USB Endpoint 7 Data Register (EP7DR)			
0x10CE	Reserved		USB Endpoint 0 Data Present Register (EP0DPR)	
0x10D2	Reserved		USB Endpoint 1 Data Present Register (EP1DPR)	
0x10D6	Reserved		USB Endpoint 2 Data Present Register (EP2DPR)	
0x10DA	Reserved		USB Endpoint 3 Data Present Register (EP3DPR)	
0x10DE	Reserved		USB Endpoint 4 Data Present Register (EP4DPR)	
0x10E2	Reserved		USB Endpoint 5 Data Present Register (EP5DPR)	
0x10E6	Reserved		USB Endpoint 6 Data Present Register (EP6DPR)	
0x10EA	Reserved		USB Endpoint 7 Data Present Register (EP7DPR)	
0x1400 – 0x17FF	USB Configuration RAM, 1 K Bytes			

Appendix B
Buffering and Impedance Matching

When required:

- SDRAM and a large number of external peripherals are required for a particular system configuration.
- Some peripherals may have excessive input capacitance.
- Minimize signal reflections at higher clock speeds.
- Minimize capacitive loading on signals to SDRAMs.
- Operation of MCF5272 at highest frequencies, i.e. 66MHz, requires clean signals to ensure setup and hold times are met and to minimize EMC noise in terms of overshoot and undershoot of signals.

What to do:

- Add buffers on address and control signals shared by SDRAM and other peripherals.
- NEVER put buffers between the MCF5272 device and the SDRAMs.
- Put termination resistors as close as possible to outputs.
- Or use buffers that have integral termination resistors.

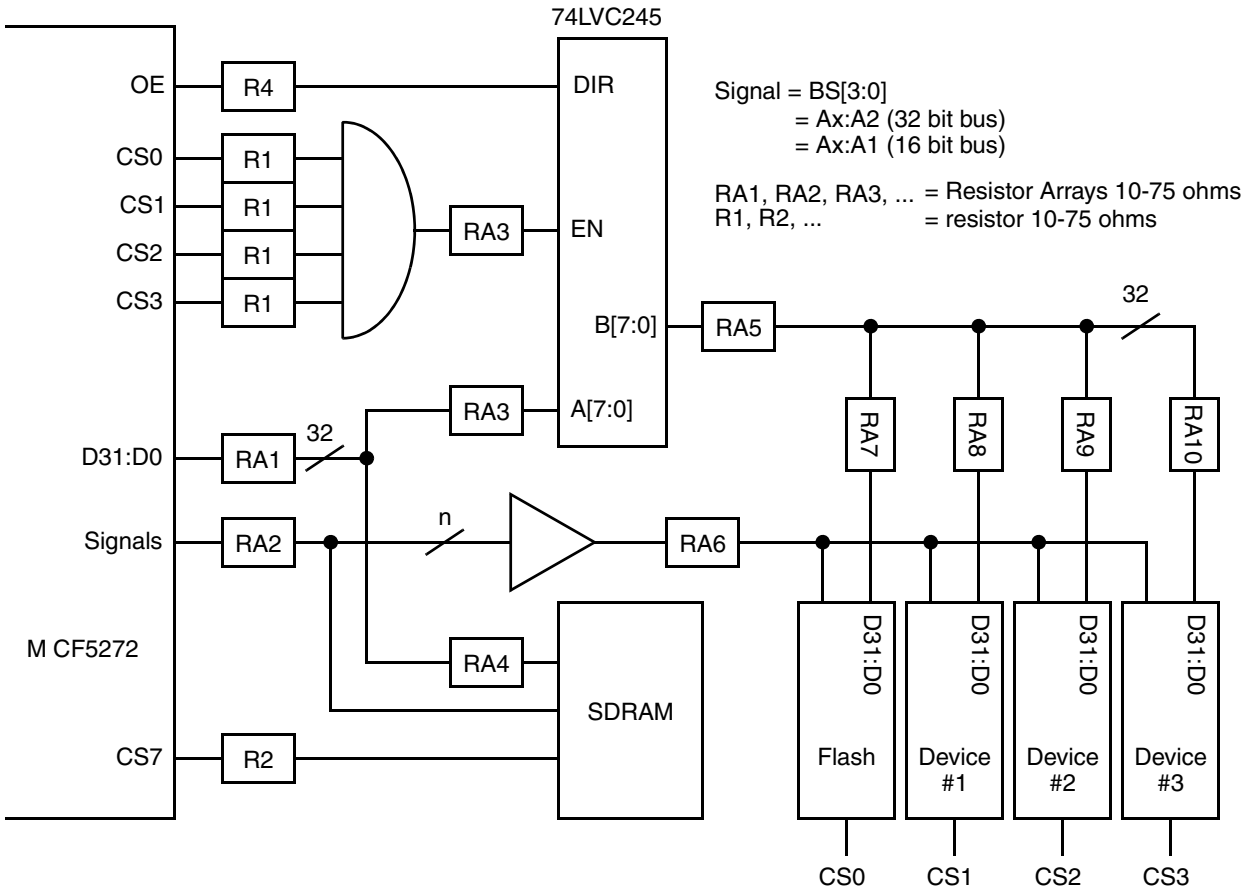

Figure B-1. Buffering and Termination

Index

A

Access control register, 4-14
ACR0 and ACR1, 4-14
Activate low-power register, 6-10
Address bus, 20-2
Address variant, 5-4
Addressing
  mode summary, 2-12
Addressing mode summary, 2-12
Arbitration, bus, 20-21
Architecture overview, 1-4
Async inputs signal timing, 23-19
Audience, 1-xl

B

Baud rate
  calculating, 16-20
  selection, 14-6
Branch instruction execution
  timing, 2-25
Buffer descriptors
  Ethernet, 11-34
  USB controller, 11-34
Buffering and impedance matching, B-1
Bus
  arbitration, 20-21
  burst data transfers, 20-17
  configurations overview, 1-7
  data transfer mechanism, 20-4
  errors, 20-19
  exceptions, 20-3
  external interface, 1-5
  external interface types, 20-7
  interface for FLASH/SRAM, 20-8
  interrupt acknowledge cycles, 20-19
  master reset, 20-22
  misaligned operands, 20-18
  normal reset, 20-23
  read/write (R/$\overline{W}$), 20-2
  reset operation, 20-21
  sizing, 20-4
  soft reset operation, 20-25
  software watchdog timer reset operation, 20-24
  transfer acknowledge ($\overline{TA}$), 20-2
  transfer error acknowledge ($\overline{TEA}$), 20-3
Byte strobes, 20-8

C

Cache
  configuration register, 2-9
  registers, access control, 2-9
Cache control register, 4-12
Caches
  coherency and validation, 4-8
  miss fetch algorithm/line fills, 4-10
CAM interface, 11-6
CCR, 2-6
Chip select
  base registers, 8-3
  CS0 special case, 8-2
  option registers, 8-5
  overview, features, usage, 8-1
  registers, 8-2
Chip selects
  general overview, 1-5
Clock generator, USB, 12-4
ColdFire
  documentation, 1-xliii
ColdFire core
  addressing mode summary, 2-12
  condition code register (CCR), 2-6
  exception processing overview, 2-25
  features and enhancements, 2-1
  instruction set summary, 2-13
  integer data formats, 2-9
  programming model, 2-4
  status register, 2-8
  supervisor programming model, 2-7
  user programming mode, 2-4
Condition code register, 2-6
Conventions
  notational, 1-xliv
  terminology, 1-xlvii
Core
  version 2
    overview, 1-4

D

Data
  bus, 20-2
Debug
  attribute trigger register, 5-7
  BDM command set summary, 5-19

breakpoint operation, 5-34
module enhancements, 2-4
real-time support, 5-33
taken branch, 5-4
theory, 5-34
Device identification register, 6-11
DMA
address modes, 10-2
byte count register, 10-6
controller registers, 10-2
data transfer types, 10-1
destination address register, 10-6
interrupt register, 10-4
mode register, 10-2
source address register, 10-5
Documentation, 1-xliii
DSCLK, 5-2

E

Electrical specifications
AC, 23-5
AC timing
debug, 23-13
fast Ethernet, 23-17
GPIO port, 23-28
IEEE 1149.1 (JTAG), 23-30
USB interface, 23-29
clock input and output timing, 23-5
DC, 23-3
DL and GCI interface timing, 23-23
maximum ratings, 23-1
MII async inputs signal timing, 23-19
operating temperature, 23-2
output loading, 23-3
processor bus input timing, 23-6
QSPI, 23-31, 23-32
SDRAM interface timing, 23-14
supply, input voltage, and storage temperature, 23-1
thermal resistance, 23-2
timer module AC timing, 23-21
USART module AC timing, 23-22
Ethernet
address recognition, 11-6
buffer descriptors
receive, 11-35
transmit, 11-37
CAM interface, 11-6
collision handling, 11-8
control register, 11-11
descriptor active register, 11-15
descriptor ring register
pointer-to-receive, 11-30
pointer-to-transmit, 11-31
error handling, 11-9
FEC initialization, 11-34
FIFO
receive bound register, 11-19
receive start register, 11-20
transmit start register, 11-22
frame
reception, 11-5
transmission, 11-4
hardware initialization, 11-33
hash table
algorithm, 11-8
high register, 11-28
low register, 11-29
initialization sequence, 11-33
internal and external loopback, 11-8
interpacket gap time, 11-8
interrupt
event register, 11-12
mask register, 11-13
vector status register, 11-14
loopbacks, 11-8
maximum frame length register, 11-24
MII
management frame register, 11-17
speed control register, 11-18
module operation, 11-1
programming model, 11-10
RAM perfect match address register
high, 11-27
low, 11-26
receive buffer size register, 11-32
receive control register, 11-23
transceiver connection, 11-3
transmit
control register, 11-25
descriptor active register, 11-16
FIFO watermark, 11-21
user initialization, 11-33
Exception processing
overview, 2-25
processor exceptions, 2-28
stack frame definition, 2-27
Exceptions
bus, 20-3
Execution timings
miscellaneous, 2-24
one operand, 2-22
two operands, 2-22
External bus interface overview, 1-5

F

Fault-on-fault halt, 5-16
Features overview, 1-1
Frame reception, 11-5

G

GPIO
  overview, 17-1
  port
    control registers, 17-2, 17-8
    data direction registers, 17-10
    data registers, 17-11

H

Halt, fault-on-fault, 5-16
Hardware
  Ethernet initialization, 11-33
Hash table
  Ethernet algotithm, 11-8

I

Initialization sequence
  Ethernet, 11-33
Instruction cache
  interaction with other modules, 4-8
  operation, 4-8
  overview, 4-7
  physical organization, 4-7
  programming model, 4-12
  reset, 4-10
Instruction execution times, 2-24
Instruction set
  fetch pipeline, 2-2
  general summary, 2-13
  MAC summary, 3-4
  MAC unit execution times, 3-4
  summary, 2-15
Integer data formats, 2-9
  memory, 2-11
  registers, 2-10
Integer data formats in memory, 2-11
Integer data formats in registers, 2-10
Interrupt controller
  overview, 7-1
  pending and mask registers, 7-4, 7-5, 7-5, 7-5
Interrupts
  bus acknowledge cycles, 20-19
  PLIC GCI, 13-10
  request inputs, 19-23

J

JTAG
  BDM debug port, 21-2
  boundary scan register, 21-4
  IDCODE register, 6-11
  instruction register, 21-7
  overview, 21-1
  restrictions, 21-8
  TAP controller, 21-3
  test access port, 21-2

L

Local memory
  module interactions, 4-1
  registers, 4-2
Loopback, Ethernet internal and external, 11-8

M

MAC
  data representation, 3-4
  hardware support, 2-3
  instruction execution timings, 3-4
  instruction set summary, 3-4
  operation, 3-3
  programming model, 2-4, 2-7
  programming modelProgramming models
    MAC, 3-2
Matching
  buffering and impedance, B-1
MBAR, 7-6, 7-8
Mechanical data
  package dimensions, 22-2
  pinout, 22-1
Memory
  integer data formats, 2-11
Memory maps
  list of tables, A-1
  USB, 12-7
Memory, SIM register, 6-2
MII
  serial management channel timing, 23-20
  transmit signal timing, 23-18
Modules
  base address register, 2-9
  debug, 2-4
MOVE instructions timing, 2-20

N

Non-IEEE 1149.1 operation, 21-8

O

Opcodes
  illegal handling, 2-3
Organization, 1-xl
Output port command registers, 16-18

P

Parallel input/output ports, 1-6

Pin descriptions, ??–19-38
address bus, 19-19
byte strobes, 19-20
clock, 19-25
data bus, 19-19
dynamic data bus sizing, 19-19
general-purpose I/O ports, 19-24
interrupt request inputs, 19-23
JTAG test access port and BDM debug port, 19-35–19-37
operating mode configuration, 19-37
PLI TDM ports, 19-30–19-35
power supply, 19-38
QSPI signals, 19-29–??
RSTI, 19-23
SDRAM
bank selects, 19-23
clock enable, 19-22
column address strobe, 19-22
row address 10, 19-23
row address strobe, 19-22
write enable, 19-22
UART0 module signals, 19-24–19-25
USB module signals and PA, 19-25–19-27
Pipelines
instruction fetch, 2-2
operand execution, 2-2
PLIC
aperiodic status register, 13-23
application examples, 13-35–13-42
automatic echo mode, 13-9
B1 data
receive registers, 13-15
transmit registers, 13-17
B2 data
receive registers, 13-16
transmit registers, 13-17
B-Channel
HDLC encoded data, 13-6
unencoded data, 13-5
clock select register, 13-34
clock synthesis, 13-11
D data
receive registers, 13-16
transmit registers, 13-18
D-Channel
HDLC encoded data, 13-6
unencoded data, 13-7
D-Channel request register, 13-32
D-Channel status register, 13-31
frame sync synthesis, 13-13
GCI C/I channel
receive registers, 13-28
transmit registers, 13-29
transmit status register, 13-30
GCI interrupts aperiodic status, 13-10
GCI monitor channel
receive registers, 13-24
transmit abort register, 13-26
transmit registers, 13-25
transmit status register, 13-27
GCI/IDL
B- and D-Channel
receive data registers, 13-3
transmit data registers, 13-4
B- and D-Channel bit alignment, 13-5
block, 13-3
D-Channel contention, 13-8
looping modes, 13-8
periodic frame interrupts, 13-9
initialization, 13-35
interrupt configuration
example, 13-37
registers, 13-20
interrupt control, 13-11
introduction, 13-1
local loopback mode, 13-9
loopback control register, 13-20
periodic status registers, 13-22
port configuration
example, 13-35
registers, 13-18
register memory map, 13-13
registers, general, 13-15
remote loopback mode, 13-9
super frame sync generation, 13-13
sync delay registers, 13-33
timing generator, 13-11
Ports
parallel input/output, 1-6
Power management registers, 6-7
Program counter, 2-6
Programming model
PWM, 18-2
QSPI, 14-9
Programming models
Ethernet, 11-10
instruction cache, 4-12
MAC, 2-7
overview, 2-4
ROM, 4-5
SIM, 6-2
SRAM, 4-2
supervisor, 2-7, 2-7
user, 2-4
PST outputs, 5-3
PULSE instruction, 5-3
PWM
control register, 18-3
operation, 18-2
overview, 18-1

programming model, 18-2
width register, 18-4

Q

QSPI
address register, 14-14
baud rate selection, 14-6
command RAM bit description, 14-15
data register, 14-14
delay register, 14-11
interrupt, 14-13
mode register, 14-9
module description, 14-1
operation, 14-3
overview and features, 14-1
programming
example, 14-16
model, 14-9
RAM
command, 14-6
model, 14-4
receive, 14-5
transmit, 14-6
slave bus interface, 14-3
transfer
data, 14-8
delays, 14-7
length, 14-8
wrap register, 14-12

R

RAM
QSPI command bit description, 14-15
USB configuration, 12-28, 12-30
RAM base address registers, 2-9
RAMBAR
overview, 4-3
power management programming, 4-4
Read/write, bus, 20-2
Registers
A0–A6, 2-5
A7, 2-5
AATR, 5-7
ABLR/ABHR, 5-6, 5-9
access control, 2-9, 4-14
activate low-power, 6-10
address, 2-5
address (A0 – A6), 2-5
ALPR, 6-10
B2 data transmit, 13-17
BI data receive, 13-15
cache configuration, 2-9
cache control, 4-12
CACR, 2-9
CCR, 2-6
chip select
base, 8-3
general, 8-2
option, 8-5
condition code, 2-6, 2-6
condition code (CCR), 2-6
CSBR, 8-3
CSOR, 8-5
CSR, 5-10
D data receive, 13-16
D0–D7, 2-5
data, 2-5
data breakpoint/mask, 5-12
data D0 - D7, 2-5
DBCR, 10-6
D-Channel request, 13-32
DDAR, 10-6
debug attribute trigger, 5-7
descriptor active, 11-15
device identification, 6-11
DIR, 10-4
DMA
byte count, 10-6
controller, 10-2
destination address, 10-6
interrupt, 10-4
mode, 10-2
sourse address, 10-5
DMR, 10-2
DSAR, 10-5
Ethernet control, 11-11
FIFO
receive bound, 11-19
receive start, 11-20
transmit start, 11-22
GCI
C/I channel transmit status, 13-30
monitor channel transmit abort, 13-26
GPIO
control port, 17-2–17-8
data, 17-11
data direction, 17-10
hash table
high, 11-28
low, 11-29
IDCODE, 6-11
integer data formats in, 2-10
interrupt
event, 11-12
mask, 11-13
vector status, 11-14
interrupt controller
pending and mask, 7-5, 7-5

interrupt controller, pending and mask, 7-4, 7-5
JTAG instruction, 21-7
local memory, 4-2
MASK, 2-6
maximum frame length, 11-24
MBAR, 2-9, 6-3
MII management frame, 11-17
MII speed control, 11-18
module base address, 2-9
output port command, 16-18
P0B1RR–P3B1RR, 13-15
P0B2RR–P3B2RR, 13-16
P0CR–P3CR, 13-18
P0GCIR–P3GCIR, 13-28
P0GMT–P3GMT, 13-25
P0ICR–P3ICR, 13-20
P0PSR–P3PSR, 13-22
P0SDR–P3SDR, 13-33
P3B1TR–P0B1TR, 13-17
P3B2TR–P0B2TR, 13-17
P3DRR–P0DRR, 13-16
P3DTR–P0DTR, 13-18
P3GCIT–P0GCIT, 13-29
P3GMR–P0GMR, 13-24
PADDR, 17-10
PAR, 7-9
PASR, 13-23
PBDDR, 17-10
PBR, 5-13
PCDDR, 17-11
PCSR, 13-34
PDCSR, 13-31
PDRQR, 13-32
PGCITSR, 13-30
PGMTA, 13-26
PGMTS, 13-27
PLCR, 13-20
PLIC
  aperiodic status, 13-23
  B1 data transmit, 13-17
  B2 data receive, 13-16
  clock select, 13-34
  D data transmit, 13-18
  D-Channel status, 13-31
  GCI C/I channel
    receive, 13-28
    transmit, 13-29
  GCI monitor channel
    general, 13-24
    transmit, 13-25
    transmit status, 13-27
  general, 13-15
  interrupt configuration, 13-20
  loopback control, 13-20
  memory map, 13-13
  periodic status, 13-22
  port configuration, 13-18
  receive data, 13-3
  sync delay, 13-33
  transmit data, 13-4
PMR, 6-7
pointer-to-receive descriptor ring, 11-30
pointer-to-transmit descriptor ring, 11-31
power management, 6-7
PWM control, 18-3
PWM width, 18-4
QSPI
  address, 14-14
  data, 14-14
  delay, 14-11
  interrupt, 14-13
  mode, 14-9
  wrap, 14-12
RAM base address, 2-9
RAM perfect match address
  high, 11-27
  low, 11-26
RAMBAR, 2-9
RAREG/RDREG, 5-22
RCREG, 5-30
RDMREG, 5-32
read control, 5-30
read debug module, 5-32
receive buffer size, 11-32
receive control, 11-23
ROM base address, 4-5
SCR, 6-5
SDCR, 9-6
SDRAM
  configuration, 9-6
  general, 9-6
  timing, 9-8
SDTR, 9-8
SIM
  base address, 7-6, 7-8
  memory map, 6-2
  module base address, 6-3
SPR, 6-6
SR, 2-8
SRAM base address, 4-3
status, 2-8, 2-8
system configuration, 6-5
system protection, 6-6
TCR, 15-4
TDR, 5-14
TER, 15-5
timer
  capture, 15-4
  event, 15-5
  general-purpose, 15-3

mode, 15-3
reference, 15-4
TMR, 15-3
transmit
control, 11-25
descriptor active, 11-16
FIFO watermark, 11-21
trigger definition, 5-14
TRR, 15-4
UACR, 16-12
UART modules, 16-2–16-18
UCR, 16-9
UCSR, 16-8
UDU/UDL, 16-14, 16-14, 16-15, 16-16
UIP, 16-17
UIPCR, 16-11
UISR, 16-12
USB
access, 12-30
alternate settings, 12-12
endpoint
control, 12-17–12-20
data, 12-27
data present, 12-28
interrupt mask, 12-26
status interrupt, 12-25
frame number, 12-9
function address, 12-11
USB general, 12-9–12-28
VB, 2-8
vector base, 2-8, 2-8
WAREG/WDREG, 5-23
watchdog
counter, 6-13
event, 6-13
interrupt reference, 6-12
WCR, 6-13
WCREG, 5-31
WDMREG, 5-33
WER, 6-13
WIRR, 6-12
write control, 5-31
write debug module, 5-33
Reset
instruction cache, 4-10
ROM
base address register, 4-5
operation, 4-5
overview, 4-5
programming model, 4-5
ROMBAR
overview, 4-5
power management programming, 4-6

S

SDCR, 9-12
SDRAM
auto initialization, 9-9
banks, page hits, page misses, 9-6
configuration register, 9-6
controller signals, 9-1
devices interface, 9-4
interface, 9-14
performance, 9-10
power-down and self-refresh, 9-9
read accesses, 9-15
refresh timing, 9-20
registers, 9-6
solving timing issues, 9-12
timing register, 9-8
write accesses, 9-18
Serial management channel timing, 23-20
Signals
bus control, 19-20–19-23
bypass, 19-22
chip selects, 19-19
clear-to-send, 19-25
CPU clock and reset, 19-23
CPU external clock, 19-23
DRESETEN, 19-23
Ethernet module, 19-27–19-29
Hi-Z, 19-22
output enable/read, 19-20
PWM module, 19-29
read/write, 19-21
receive serial data input, 19-25
request to send, 19-25
reset output, 19-23
timer module, 19-27, 19-27
transfer acknowledge, 19-22
transmit serial data output, 19-24
USB
receive data negative, 19-25
receive serial data input, 19-25
Rx data output, 19-26
suspend driver, 19-26
transmit data negative, 19-26
transmit serial data output, 19-25
transmitter output enable, 19-26
USB_CLK, 19-26
USB_D+ and USB_D-, 19-26
wake-on-ring, 19-26
SIM
overview, 1-5
programming model, 6-2
register memory map, 6-2
Software watchdog timer, 6-11
SRAM

base address register, 4-3
initialization, 4-4
overview and operation, 4-2
programming model, 4-2
Stack pointer, 2-5, 2-5
Status register, 2-8
STOP instruction, 5-4, 5-16
Suggested reading, 1-xliii
Supervisor
programming model, 2-7
System configuration and protection, 1-5
System protection register, 6-6

T

TAP controller, 21-3
TCN0–TCN3, 15-4
Test access port, 1-7
Timer module
capture registers, 15-4
counters, 15-4
event registers, 15-5
general-purpose registers, 15-3
mode registers, 15-3
operation, 15-1
overview, 1-7, 15-1
reference registers, 15-4
Timers
bus software watchdog, 20-24
Timing
branch instruction execution, 2-25
clock input and output, 23-5
fast Ethernet AC, 23-17
GPIO port AC, 23-28
JTAG AC, 23-30
MAC unit instructions, 3-4
MII
transmit signal, 23-18
MII async input signal, 23-19
MOVE instructions, 2-20
one operand, 2-22
PLI, 23-23
processor bus input, 23-6
SDRAM interface, 23-14
serial management channel, 23-20
timer module AC, 23-21
two operands, 2-22
USART AC, 23-22
USB interface AC, 23-29
Timings
SDRAM refresh, 9-20
Transmit signal timing, 23-18

U

UART modules
bus operation
interrupt acknowledge cycles, 16-29
read cycles, 16-29
write cycles, 16-29
clock source baud rates, 16-20
external clock, 16-21
FIFO stack in UART0, 16-25
initialization sequence, 16-30
looping modes, 16-26
automatic echo, 16-27
local loop-back, 16-27
remote loop-back, 16-27
mode registers, 16-4
multidrop mode, 16-28
overview, 1-6
programming, 16-30
receiver enabled, 16-24
register description, 16-2
serial overview, 16-2
signal definitions, 16-18
transmitter/receiver
clock source, 16-19
modes, 16-22
transmitting in UART mode, 16-22
USB
access times, 12-30
alternate settings register, 12-12
architecture, 12-2
attachment detection, 12-36
buffer descriptors, 11-34
class- and vendor-specific request operation, 12-34
clock generator, 12-4
configuration and interface changes, 12-31
configuration RAM, 12-28, 12-30
control logic, 12-4
control, bulk, and interrupt endpoints, 12-33
data flow, 12-32
device configuration example, 12-29
endpoint
controllers, 12-5
data present registers, 12-28
data registers, 12-27
FIFOs, 12-30
halt feature, 12-35
interrupt mask registers, 12-26
status interrupt registers, 12-25
endpoint control registers, 12-17, 12-20
FIFO configuration, 12-32
frame number match register, 12-9
function address register, 12-11
IN endpoints, 12-33, 12-34
initialization, 12-31

isochronous endpoints, 12-33
line interface, 12-36
memory map, 12-7
module operation, 12-2
OUT endpoints, 12-33, 12-34
overview, 12-1
PCB layout recommendations, 12-36
register
access, 12-30
descriptions, 12-9, 12-28
remote wakeup and resume operation, 12-35
request processor, 12-5
software architecture and application notes, 12-31
transceiver interface, 12-3
User programming model, 2-5

V

Variant address, 5-4
Vector base register, 2-8, 2-8
Version 2 ColdFire core overview, 1-4

W

Wait state generation
overview, 1-5
Watchdog
counter register, 6-13
event register, 6-13
interrupt reference register, 6-12
WDDATA execution, 5-3

Overview 1
ColdFire Core 2
Hardware Multiply/Accumulate (MAC) Unit 3
Local Memory 4
Debug Support 5
System Integration Module (SIM) 6
Interrupt Controller 7
Chip-Select Module 8
SDRAM Controller 9
DMA Controller Module 10
Ethernet Module 11
Universal Serial Bus (USB) 12
Physical Layer Interface Controller (PLIC) 13
Queued Serial Peripheral Interface (QSPI) Module 14
Timer Module 15
UART Modules 16
General-Purpose I/O Module 17
Pulse-Width Modulation (PWM) Module 18
Signal Descriptions 19
Bus Operation 20
IEEE 1149.1 Test Access Port (JTAG) 21
Mechanical Data 22
Electrical Characteristics 23
Appendix A: List of Memory Maps A
Appendix B: Buffering and Impedence Matching B
Index IND

1 Overview
2 ColdFire Core
3 Hardware Multiply/Accumulate (MAC) Unit
4 Local Memory
5 Debug Support
6 System Integration Module (SIM)
7 Interrupt Controller
8 Chip-Select Module
9 SDRAM Controller
10 DMA Controller Module
11 Ethernet Module
12 Universal Serial Bus (USB)
13 Physical Layer Interface Controller (PLIC)
14 Queued Serial Peripheral Interface (QSPI) Module
15 Timer Module
16 UART Modules
17 General-Purpose I/O Module
18 Pulse-Width Modulation (PWM) Module
19 Signal Descriptions
20 Bus Operation
21 IEEE 1149.1 Test Access Port (JTAG)
22 Mechanical Data
23 Electrical Characteristics
A Appendix A: List of Memory Maps
B Appendix B: Buffering and Impedence Matching
IND Index

How to Reach Us:

Home Page:
www.freescale.com

E-mail:
support@freescale.com

USA/Europe or Locations Not Listed:
Freescale Semiconductor
Technical Information Center, CH370
1300 N. Alma School Road
Chandler, Arizona 85224
+1-800-521-6274 or +1-480-768-2130
support@freescale.com

Europe, Middle East, and Africa:
Freescale Halbleiter Deutschland GmbH
Technical Information Center
Schatzbogen 7
81829 Muenchen, Germany
+44 1296 380 456 (English)
+46 8 52200080 (English)
+49 89 92103 559 (German)
+33 1 69 35 48 48 (French)
support@freescale.com

Japan:
Freescale Semiconductor Japan Ltd.
Headquarters
ARCO Tower 15F
1-8-1, Shimo-Meguro, Meguro-ku,
Tokyo 153-0064
Japan
0120 191014 or +81 3 5437 9125
support.japan@freescale.com

Asia/Pacific:
Freescale Semiconductor Hong Kong Ltd.
Technical Information Center
2 Dai King Street
Tai Po Industrial Estate
Tai Po, N.T., Hong Kong
+800 2666 8080
support.asia@freescale.com

For Literature Requests Only:
Freescale Semiconductor Literature Distribution Center
P.O. Box 5405
Denver, Colorado 80217
1-800-441-2447 or 303-675-2140
Fax: 303-675-2150
LDCForFreescaleSemiconductor@hibbertgroup.com

RoHS-compliant and/or Pb-free versions of Freescale products have the functionality and electrical characteristics of their non-RoHS-compliant and/or non-Pb-free counterparts. For further information, see http://www.freescale.com or contact your Freescale sales representative.

For information on Freescale's Environmental Products program, go to http://www.freescale.com/epp.

Information in this document is provided solely to enable system and software implementers to use Freescale Semiconductor products. There are no express or implied copyright licenses granted hereunder to design or fabricate any integrated circuits or integrated circuits based on the information in this document.

Freescale Semiconductor reserves the right to make changes without further notice to any products herein. Freescale Semiconductor makes no warranty, representation or guarantee regarding the suitability of its products for any particular purpose, nor does Freescale Semiconductor assume any liability arising out of the application or use of any product or circuit, and specifically disclaims any and all liability, including without limitation consequential or incidental damages. "Typical" parameters that may be provided in Freescale Semiconductor data sheets and/or specifications can and do vary in different applications and actual performance may vary over time. All operating parameters, including "Typicals", must be validated for each customer application by customer's technical experts. Freescale Semiconductor does not convey any license under its patent rights nor the rights of others. Freescale Semiconductor products are not designed, intended, or authorized for use as components in systems intended for surgical implant into the body, or other applications intended to support or sustain life, or for any other application in which the failure of the Freescale Semiconductor product could create a situation where personal injury or death may occur. Should Buyer purchase or use Freescale Semiconductor products for any such unintended or unauthorized application, Buyer shall indemnify and hold Freescale Semiconductor and its officers, employees, subsidiaries, affiliates, and distributors harmless against all claims, costs, damages, and expenses, and reasonable attorney fees arising out of, directly or indirectly, any claim of personal injury or death associated with such unintended or unauthorized use, even if such claim alleges that Freescale Semiconductor was negligent regarding the design or manufacture of the part.

Freescale™ and the Freescale logo are trademarks of Freescale Semiconductor, Inc. All other product or service names are the property of their respective owners.

© Freescale Semiconductor, Inc. 2002, 2006, 2007. All rights reserved.

MCF5272UM
Rev. 3, 03/2007

freescale™
semiconductor