CUI INC®

SERIES: MD-SGK | DESCRIPTION: MINI DIN CONNECTOR

DISCONTINUED

FEATURES
- PCB mount
- fully shielded
- right angle
- ground tabs with kinked pins



RoHS

PART NUMBER KEY

MD - XX SGK

Base Number

Pin Options
30 = 3 pins
40 = 4 pins
50 = 5 pins
60 = 6 pins
80 = 8 pins

SPECIFICATIONS

parameter	conditions/description	min	typ	max	units
rated input voltage			100 12		Vac Vdc
rated input current	at 100 Vac at 12 Vdc			1 2	A A
contact resistance				30	mΩ
insulation resistance	at 250 Vdc	50			MΩ
voltage withstand	for 1 minute			250	Vac
insertion force		1		4.5	kg
withdrawal force		0.8		3	kg
operating temperature		-40		85	°C
life			1,000		cycles
flammability rating	UL94V-0				
RoHS	2011/65/EU				

MECHANICAL DRAWINGS

units: mm[inches]

TOLERANCE: ±0.2mm

	MATERIAL	PLATING
earth terminal	brass	tin
contact terminals (1~8)	phosphor bronze	silver
plastic	PBT	

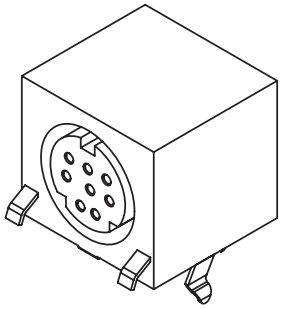

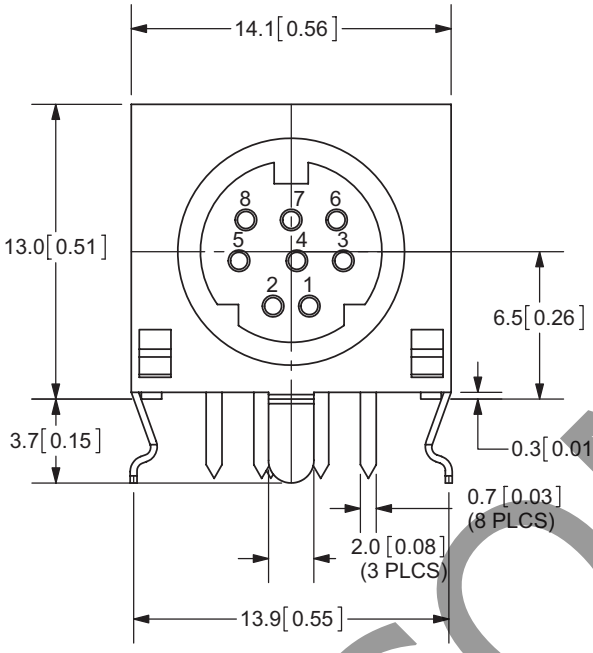

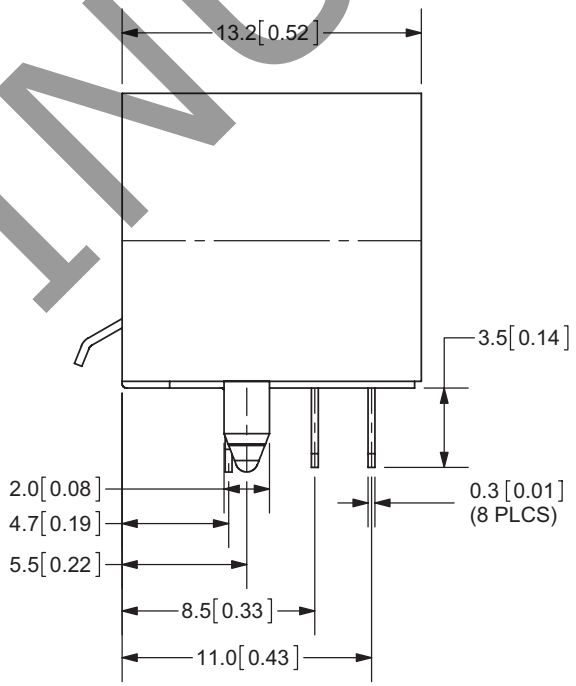

MD-30SGK



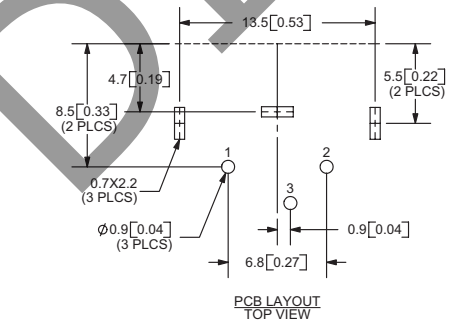

PCB LAYOUT
TOP VIEW

MD-40SGK

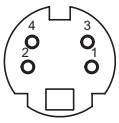

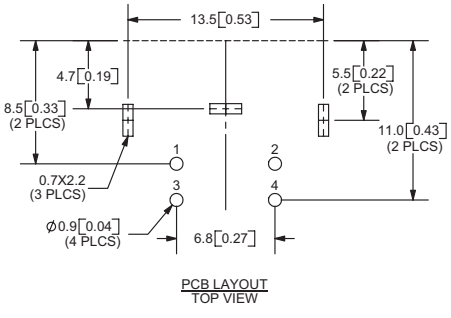

PCB LAYOUT
TOP VIEW

MD-50SGK

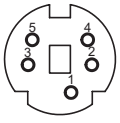

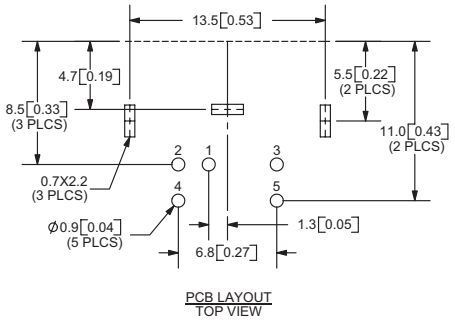

PCB LAYOUT
TOP VIEW

DISCONTINUED

MECHANICAL DRAWINGS (CONTINUED)

MD-60SGK

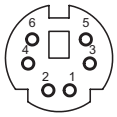

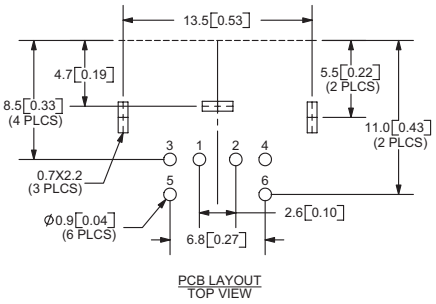

PCB LAYOUT
TOP VIEW

MD-80SGK

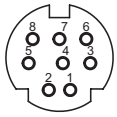

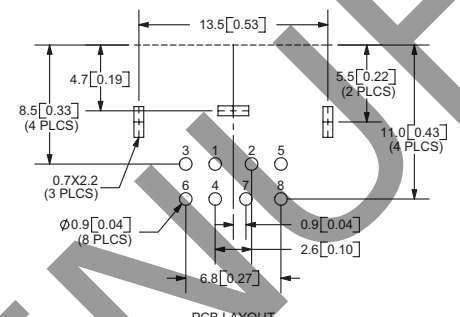

PCB LAYOUT
TOP VIEW

DISCONTINUED

REVISION HISTORY

rev.	description	date
1.0	initial release	02/23/2006
1.01	new template applied	02/22/2012
1.02	updated pin dimensions	03/07/2012
1.03	updated datasheet	08/25/2017

The revision history provided is for informational purposes only and is believed to be accurate.

DISCONTINUED

CUI INC®

Headquarters
20050 SW 112th Ave.
Tualatin, OR 97062
800.275.4899

Fax 503.612.2383
cui.com
techsupport@cui.com

CUI offers a one (1) year limited warranty. Complete warranty information is listed on our website.

CUI reserves the right to make changes to the product at any time without notice. Information provided by CUI is believed to be accurate and reliable. However, no responsibility is assumed by CUI for its use, nor for any infringements of patents or other rights of third parties which may result from its use.

CUI products are not authorized or warranted for use as critical components in equipment that requires an extremely high level of reliability. A critical component is any component of a life support device or system whose failure to perform can be reasonably expected to cause the failure of the life support device or system, or to affect its safety or effectiveness.