Compact and High-Performance of 2-Phase Stepper Motor Driver

■ Features

- Unipolar constant current drive type
- Enable to brake when it stops by STOP current adjustment
- Low speed and precise control with microstep (MD2U-MD20)
- Insulate using photocoupler to minimize the influence by external noise
- Power supply: 24-35VDC

Please read "Safety Considerations" in the instruction manual before using.



MD2U-MD20



MD2U-ID20

■ Ordering Information

MD 2 U – M D 20

RUN current	20	2A/Phase
Power supply	D	24-35VDC
Step method (resolution)	M	Micro Step (20-division)
	I	Intelligent type
Drive method	U	Unipolar drive
Motor phase	2	2-phase
Item	MD	Motor Driver

■ Specifications

Model		MD2U-MD20	MD2U-ID20
Power supply※1		24-35VDC⎓	
Allowable voltage range		90 to 110% of the rated voltage	
Max. current consumption※2		3A	
RUN current※3		0.5-2A/Phase	
STOP current		20 to 70% of RUN current (set by STOP current volume)	
Drive method		Unipolar constant current drive type	
Basic step angle		1.8˚/Step	
Max. drive speed		—	1500rpm
Resolution		1, 2, 4, 5, 8, 10, 16, 20-division (1.8˚ to 0.09˚/Step)	—
Input pulse characteristic	Input pulse width	Min. 10μs (CW, CCW), min. 1ms (HOLD OFF)	
	Duty rate	50% (CW, CCW)	
	Rising/Falling time	Max. 0.5μs (CW, CCW)	
	Pulse input voltage	[H]: 4-8VDC⎓, [L]: 0-0.5VDC⎓	
	Max. input current	4mA (CW, CCW), 10mA (HOLD OFF)	
	Max. input pulse freq.※4	Max. 50kHz (CW, CCW)	
Input resistance		300Ω (CW, CCW), 390Ω (HOLD OFF)	3.3kΩ (CW/CCW, RUN/STOP, HOLD OFF)
Insulation resistance		Over 200MΩ (at 500VDC megger, between all terminals and case)	
Dielectric strength		1000VAC 50/60Hz for 1 min (between all terminals and case)	
Noise immunity		±500V the square wave noise (pulse width: 1μs) by the noise simulator	
Vibration		1.5mm amplitude at frequency of 10 to 55Hz (for 1 min) in each X, Y, Z direction for 2 hours	
Shock	Vibration	300m/s² (approx. 30G) in each X, Y, Z direction for 3 times	
Environment	Ambient temp.	0 to 50℃, storage: -10 to 60℃	
	Ambient humi.	35 to 85%RH, storage: 35 to 85%RH	
Approval		CE	
Weight※5		Approx. 295g (approx. 180g)	Approx. 303g (approx. 190g)

※1: Since torque characteristics are improved but the driver temperature rises with the 30VDC power supply, the driver should be installed at the well ventilated environment. Torque is variable by power supply.
※2: Based on the ambient temperature 25℃, ambient humidity 55%RH.
※3: RUN current varies depending on the input RUN frequency, and the max. instantaneous RUN current varies also.
※4: Max. input pulse frequency is max. frequency to be input and is not same as max. pull-out frequency or max. slewing frequency.
※5: The weight includes packaging. The weight in parenthesis is for unit only.
※Environment resistance is rated at no freezing or condensation.

2-Phase Micro Stepper Driver [MD2U-MD20]

▣ Unit Descriptions



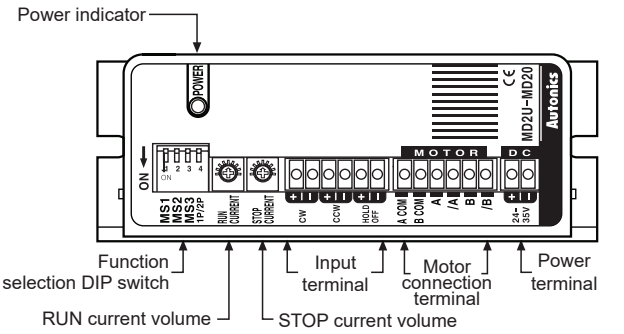

※Refer to '▣ **Secifications**'.

▣ Functions

◎ Function selection DIP switch

• Microstep, pulse input method setting



No.	Name	Function	Switch position	
			ON	OFF
1	MS1	Microstep setting	(see below)	
2	MS2			
3	MS3			
4	1P/2P	Pulse input method	1-pulse input method	2-pulse input method

MS1	MS2	MS3	Resolution
ON	ON	ON	1 (Full-step)
ON	ON	OFF	2-division
ON	OFF	ON	4-division
ON	OFF	OFF	5-division
OFF	ON	ON	8-division
OFF	ON	OFF	10-division
OFF	OFF	ON	16-division
OFF	OFF	OFF	20-division

• Resolution setting (MS1/MS2/MS3)

- Select the step angle (motor rotation angle per 1 pulse).
- The set step angle is dividing basic step angle(1.8°) of 2-phase stepping motor by set resolution value.

$$\text{E.g.) Set step angle} = \frac{\text{Basic angle (1.8°)}}{\text{Resolution}}$$

※Change resolution setting value only when the motor stops.

• 1P/2P

- The switch is to select pulse input method.
- 1-pulse input method: CW → operating rotation signal input, CCW → rotation direction signal input ([H]: CW, [L]: CCW)
- 2-pulse input method: CW → CW rotation signal input, CCW → CCW rotation signal input.

◎ Setting RUN current

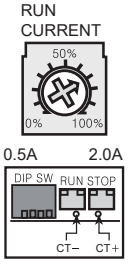

- RUN current setting is for the current provided to the motor in running status.

※When RUN current is increased, RUN torque of the motor is also increased.
※When RUN current is set too high, the heat of the motor is increased.
※Set RUN current properly for the load within the rated current range of the motor.
※RUN current setting range: 0.5 to 2.0A
※RUN current setting method: Measure the voltage by connecting a DC voltage meter to both CT+ and CT- terminals while the motor is running (max. 150rpm)

$$\text{E.g.) Input voltage (3V)} \times \frac{2}{3} = \text{2A (motor excitation current)}$$

※Change RUN current only when the motor stops.

◎ Setting STOP current



- STOP current setting is for the current provided to the motor in stopped status, preventing severe heat of the motor.
- This function is for reducing the heat by variable resistance ratio setting within 0 to 100% of RUN current setting range (actual setting range: 20 to 70%).
  E.g.) In case of RUN current setting value is 2A and
  STOP current setting value is 0% (actual setting range: 20%),
  STOP current 2A × 0.2 = 0.4A

※When STOP current is decreased, STOP torque of the motor is also decreased.
※When STOP current is set low, the heat of the motor is also low.
※Change STOP current only when the motor stops.

◎ HOLD OFF function

- This signal is for rotating axis of the motor with external force or manual positioning.
- When hold off signal maintains over 1ms as [H], motor excitation is released.
- When hold off signal maintains over 1ms as [L], motor excitation is in a normal status.

※Use this function only when the motor stops.
※Refer to '▣ **I/O Circuit and Connections**'.

▣ I/O Circuit and Connections

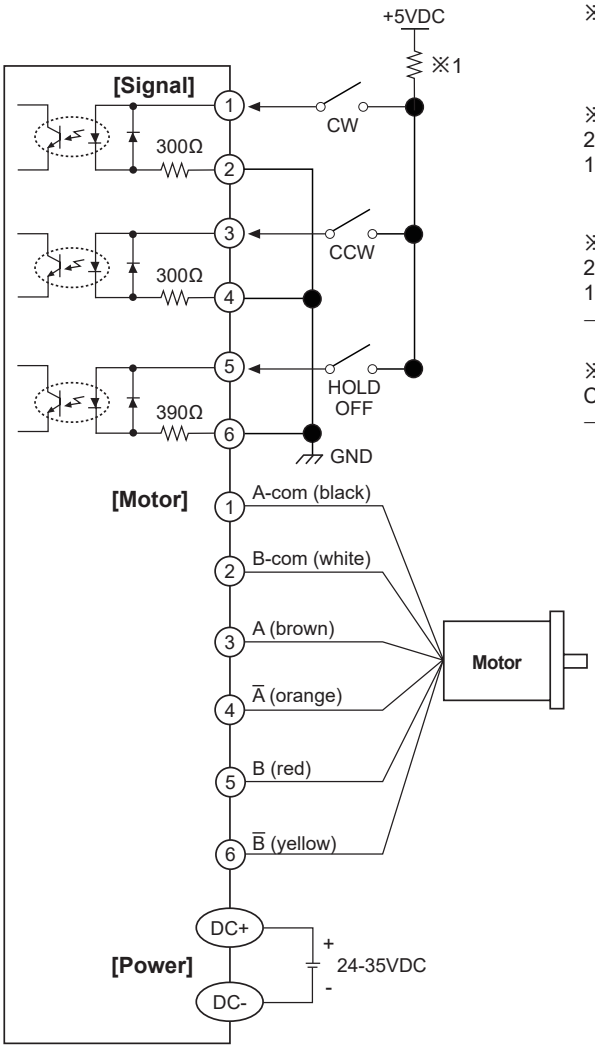

※1: If the power for driving pulse from external is over than +5VDC, please connect resistor at the outside.
(input power max. 24VDC, input current 10-20mA)

※CW
2-pulse input method (CW rotation signal input)
1-pulse input method (operating rotation signal input)

※CCW
2-pulse input method (CCW rotation signal input)
1-pulse input method (rotation direction signal input)
→[H]: CW, [L]: CCW

※HOLD OFF
Control signal for motor excitation OFF
→ [H]: Motor excitation OFF

▣ Time Chart

● 1 pulse input method

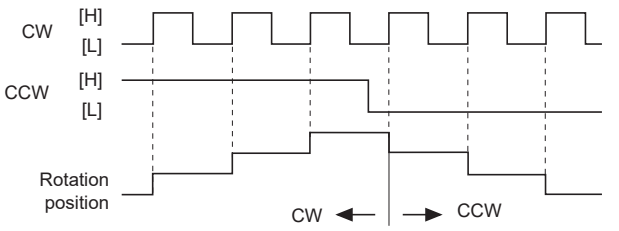

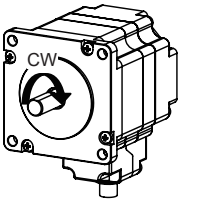

● 2 pulse input method

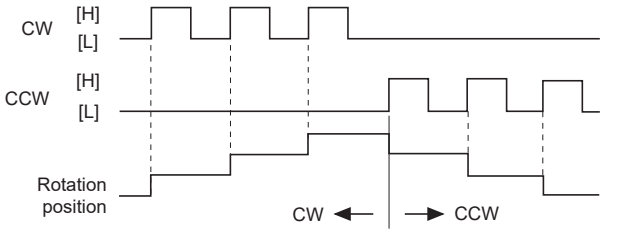

※Do not input CW, CCW signals at the same time in 2-pulse input method.
It may not operate properly if another direction signal is inputted when one of CW or CCW is [H].

▣ Dimensions

(unit: mm)

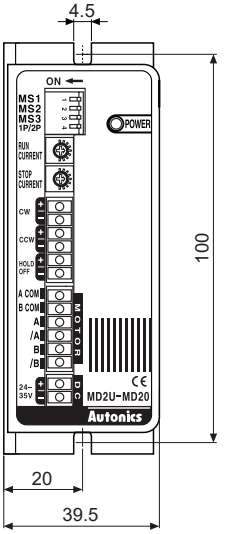

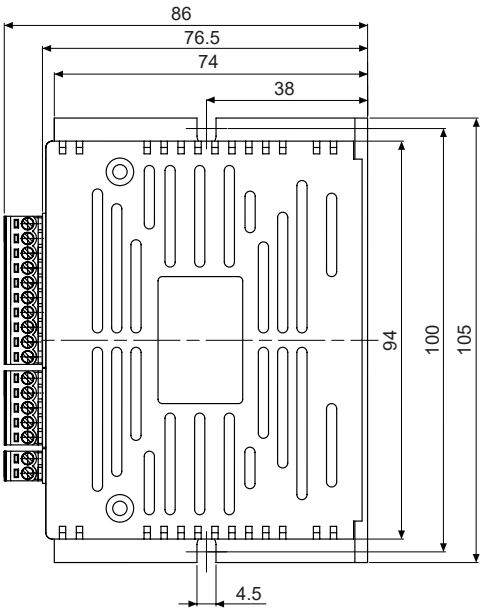

2-Phase Intelligent Stepper Motor Driver [MD2U-ID20]

▣ Unit Descriptions



※Refer to '▣ **Specifications**'.

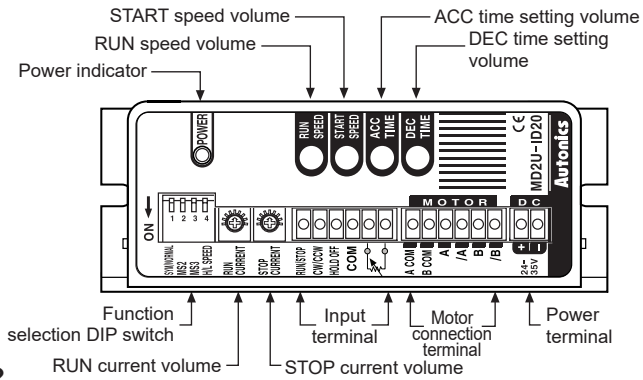

◎ Intelligent type stepper motor driver?

MD2U-ID20 is an intelligent type stepper motor driver including all features to control 2-phase stepper motors so that no controllers are required.

- Realizing AC motor's driving features to stepper motors
- Controlling START speed, RUN speed and ACC/DEC speed
- User-friendly design to realize various functions (front switch and volume)

▣ Functions

◎ Function selection DIP switch

	No.	Name	Function	Switch position	
				ON	OFF
	1	SYM/ NORMAL	SYM/NORMAL	Symmetry	Asymmetry
	2	MS2	Max. speed		
	3	MS3			
	4	H/L SPEED	High/Low speed		

MS2	MS3	H/L SPEED	Max. speed (rpm)
ON	ON	ON: High speed	1500
ON	OFF		1350
OFF	ON		1000
OFF	OFF		500
D※1	D※1	OFF: Low speed	150

※1: D=Don't care

※Reboot the driver after changing function selection switch.

◎ Selection of Symmetry/Asymmetry

※The function to make the ACC/DEC time of run-speed as asymmetry or symmetry using DIP switch No. 1.

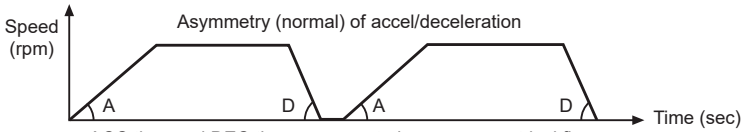

ACC time and DEC time are repeated as a asymmetrical figure

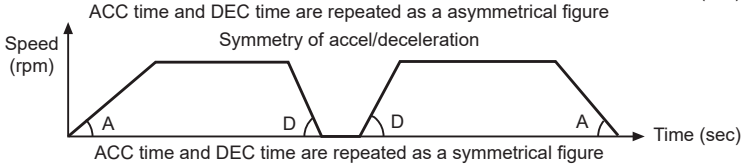

ACC time and DEC time are repeated as a symmetrical figure

※It is able to set the gradient (acceleration and deceleration time) as ACC/DEC time.

◎ Selection of max. speed (MS2, MS3)

※The function to select the max. speed of motors.

※The max. speed of stepper motor is changed by MS2/MS3 and Hi/Low speed.

※The features of run and vibration are able to change depending on MS2, MS3.

※Lower the max. speed to run a motor smoothly.

◎ Selection of H/L SPEED

※H/L SPEED mode selection switch

: Accel/deceleration control is not available in Low speed mode since all sections are included in Pull-in range.

※Low speed mode: It is able to drive a motor up to 150rpm of max. drive speed.

※High speed mode: It is able to drive a motor up to 1500rpm of max. drive speed.

◎ Setting RUN current

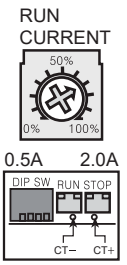

- RUN current setting is for the current provided to the motor in running status.

※When RUN current is increased, RUN torque of the motor is also increased.
※When RUN current is set too high, the heat of the motor is increased.
※Set RUN current properly for the load within the rated current range of the motor.
※RUN current setting range: 0.5 to 2.0A
※RUN current setting method: Measure the voltage by connecting a DC voltage meter to both CT+ and CT- terminals while the motor is running (max. 150rpm)

E.g.) Input voltage (3V) × $\frac{2}{3}$ = 2A (motor excitation current)

※Change RUN current only when the motor stops.

◎ Setting STOP current

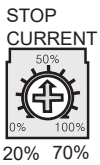

- STOP current setting is for the current provided to the motor in stopped status, preventing severe heat of the motor.
- This function is for reducing the heat by variable resistance ratio setting within 0 to 100% of RUN current setting range (actual setting range: 20 to 70%).

E.g.) In case of RUN current setting value is 2A and
STOP current setting value is 0%(actual setting range: 20%),
STOP current 2A × 0.2 = 0.4A

※When STOP current is decreased, STOP torque of the motor is also decreased.
※When STOP current is set low, the heat of the motor is also low.
※Change STOP current only when the motor stops.

◎ Setting RUN speed

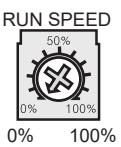

※It sets max. RUN speed.
※Max. RUN speed can be different depending on max. speed setting (MS2, MS3) and driving mode setting (Hi/Low speed).
※Since missing step can occur due to max. input pulse frequency of motors, consider motor type and its RUN current when setting max. RUN speed.
※Set the value only when the motor stops.

◎ Setting START speed

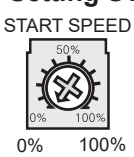

※It sets START speed.
※Max. START speed value is same with RUN speed value.
※Although START speed must be set within max. starting frequency, it is recommended to set up START speed within 0 to 50% for stable driving.
※Set the value only when the motor stops.

◎ Setting ACC time



※It sets the acceleration time from START speed to max. RUN speed.
※Operates in AT_1 operation mode when ACC time is under 33.3%, AT_2 operation mode when ACC time is under 66.6%, and AT_3 operation mode when ACC time is over 66.6%.
※AT_1 is 0.5 sec when RUN speed=100%, START speed=0%.
※AT_2 is 1 sec when RUN speed=100%, START speed=0%.
※AT_3 is 2 sec when RUN speed=100%, START speed=0%.
※Set the value only when the motor stops.

◎ Setting DEC time



※It sets the deceleration time from max. RUN speed to STOP.
※Operates in DT_1 operation mode when DEC time is under 33.3%, DT_2 operation mode when DEC time is under 66.6%, and DT_3 operation mode when DEC time is over 66.6%.
※DT_1 is 0.5 sec when RUN speed=100%, START speed=0%.
※DT_2 is 1 sec when RUN speed=100%, START speed=0%.
※DT_3 is 2 sec when RUN speed=100%, START speed=0%.
※Set the value only when the motor stops.

※ACC Time and DEC Time are declined in proportion to the setting value of START speed.
※The figures above indicate the factory default for each value.

◎ HOLD OFF function

- This signal is for rotating axis of the motor with external force or manual positioning.
- When hold off signal maintains over 1ms as [H], motor excitation is released.
- When hold off signal maintains over 1ms as [L], motor excitation is in a normal status.

※Use this function only when the motor stops.
※Refer to '▣ **I/O Circuit and Connections**'.

▣ Time Chart

◎ High speed mode

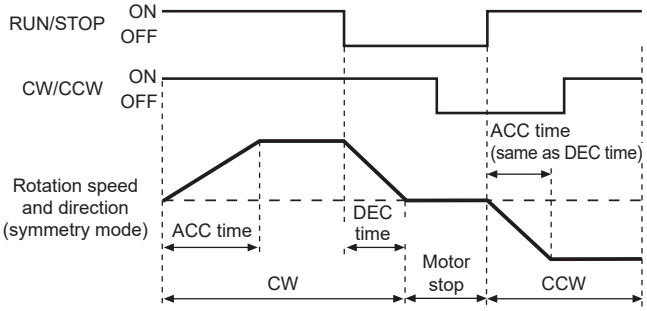

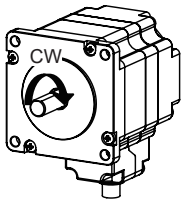

※It accelerates up to RUN speed during ACC time after RUN signal is ON and decelerates during DEC time after it is OFF.
※It is disable to change the direction during the signal is ON.
※It takes 0.5sec for deceleration when DEC time is "0%".

◎ Low speed mode

Max. RUN speed is 150rpm and ACC and DEC time are not available.
It is same with High speed to change RUN/STOP and direction.

▣ I/O Circuit and Connections

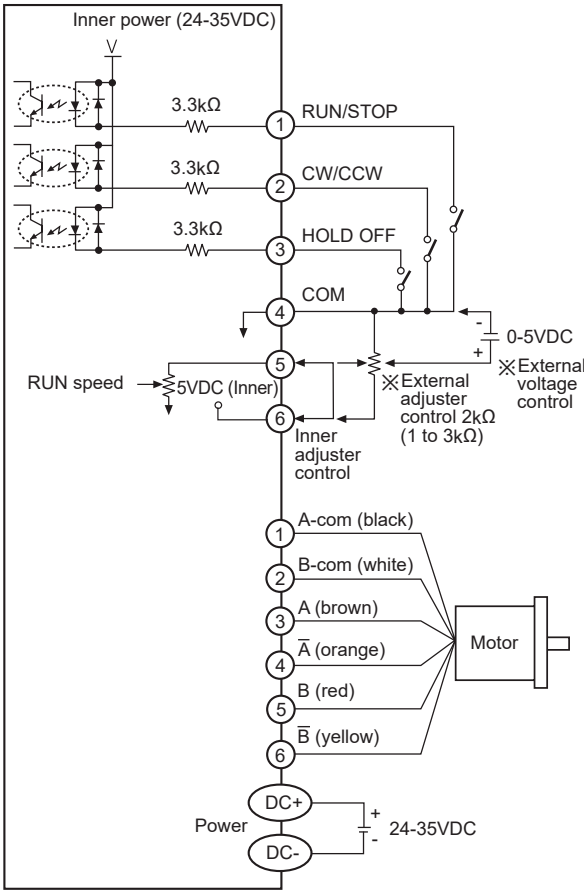

※Inner adjuster is correlated to external adjuster control and external voltage control. Make sure that inner adjuster must be set to maximum in order to set maximum RUN speed using external adjuster and external voltage.

※RUN/STOP signal input
→ [ON]: RUN, [OFF]: STOP

※Direction signal input
→ [ON]: CW, [OFF]: CCW

※HOLD OFF signal iuput
→ [ON]: HOLD OFF, [OFF]: HOLD ON

● Inner adjuster control (Adjusting RUN speed with front VR)

Make the connection between terminal No.5 and No.6.

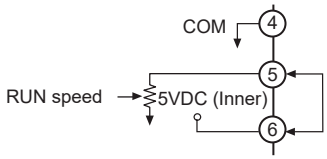

● External adjuster control (Adjusting RUN speed with connecting external variable resistance)

Connect variable resistance 2kΩ (1 to 3kΩ) for external adjuster control. If variable resistance is too low, full range setting might not be possible. Make sure to adjust RUN speed VR to maximum for external adjuster control.

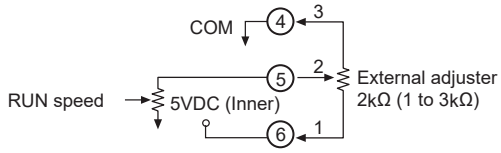

● External voltage control (Adjusting RUN speed with external voltage input)

Make sure to adjust RUN speed VR to maximum external voltage control.

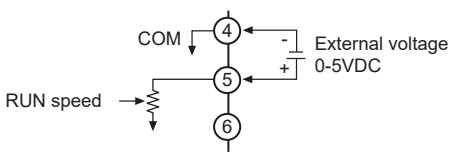

▣ Dimensions

(unit: mm)

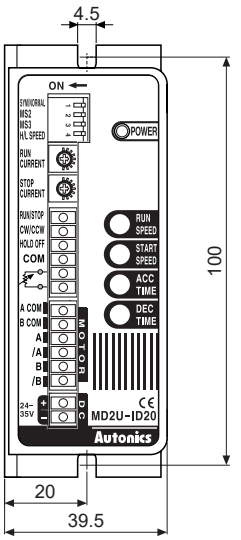

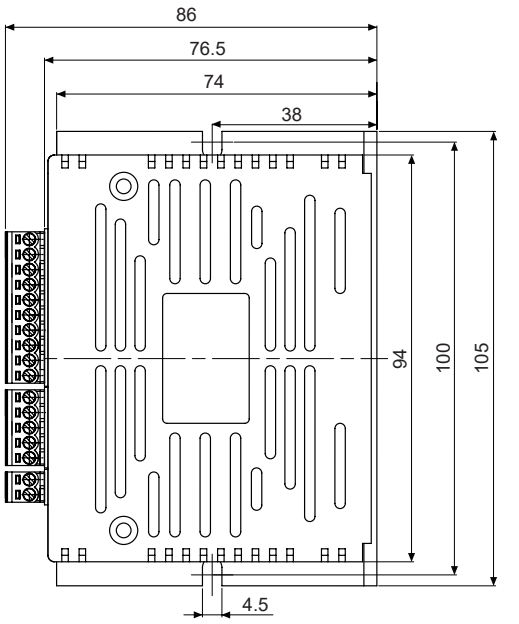

▣ Proper Usage

- Follow instructions in 'Proper Usage'. Otherwise, it may cause unexpected accidents.
- 24-35VDC power supply should be insulated and limited voltage/current or Class 2, SELV power supply device.
- Re-supply power after min. 1 sec from disconnected power.
- When the signal input voltage is exceeded the rated voltage, connect additional resistance at the outside.
- Set RUN current within the range of motor's rated current depending on the load.
  When the rated motor current is over, the heat may be increased and motor may be damaged.
- If motor stops, switching for STOP current executed by the current down function.
  When hold off signal is [H] or current down function is off, the switching does not execute.
- Use twisted pair (over 0.2mm^2) for the signal cable which should be shorter than 2m.
- The thickness of cable should be same or thicker than the motor cable's when extending the motor cable.
- Keep the distance between power cable and signal cable more than 10cm.
- If the TEST switch is ON, the motor operates immediately and it may be dangerous.
- Do not change any setting switches (function, run/stop current, resolution switches) during the operation or after supplying power.
  Failure to follow this instruction may result in malfunction.
- Motor vibration and noise can occur in specific frequency period
  ①Change motor installation method or attach the damper.
  ②Use the unit out of the dedicated frequence range when vibration and noise occurs due to changing motor RUN speed.
- For using motor, it is recommended to maintenance and inspection regularly.
  ①Unwinding bolts and connection parts for the unit installation and load connection
  ②Strange sound from ball bearing of the unit
  ③Damage and stress of lead cable of the unit
  ④Connection error with motor
  ⑤Inconsistency between the axis of motor output and the center, concentric (eccentric, declination) of the load, etc.
- This product does not prepare protection function for a motor.
- This unit may be used in the following environments.
  ①Indoors (in the environment condition rated in 'Specifications')
  ②Altitude max. 2,000m
  ③Pollution degree 2
  ④Installation category II