DWG. NO. CO-2937-F REV. "A"

PART NO. MDJ7PS-NL

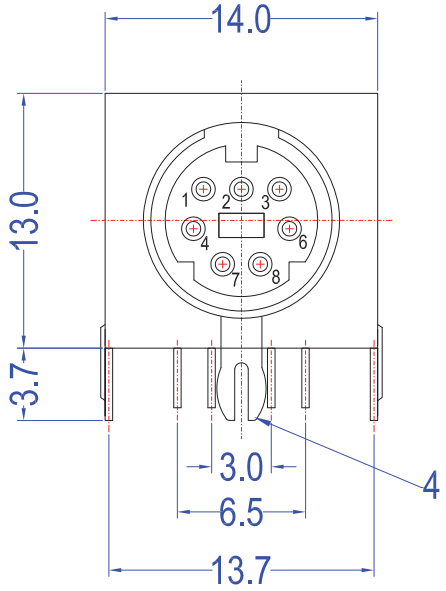

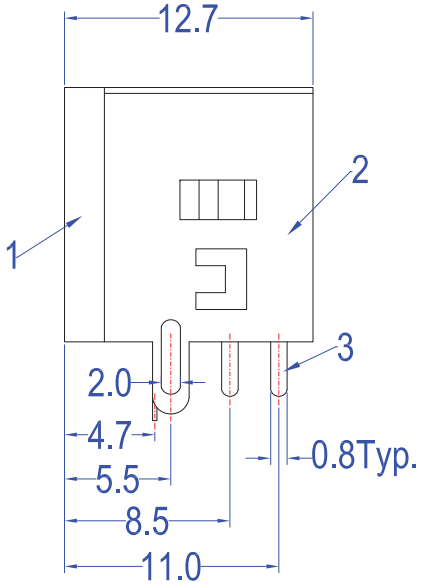

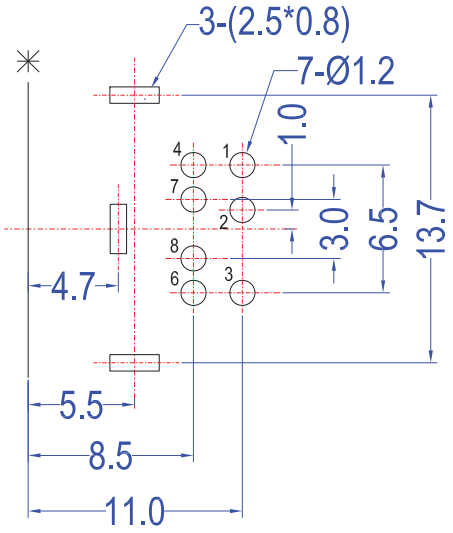

T: 1.6 Dimensions of PC board holes

Tolerance : ±0.05 (Printed-Top view)

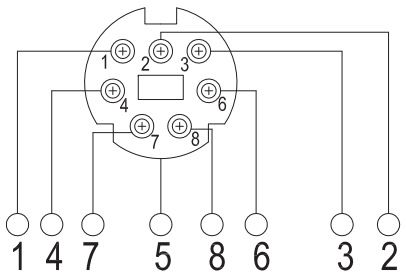

SCHEMATIC DIAGRAM

UNLESS OTHERWISE SPECIFIED,
TOLERANCE ON DECIMAL: ±0.3

NOTE: ALL DIMS ARE IN mm.

NO.	DESCRIPTION	QTY	MATERIAL	PLATING & COLOR
4	GROUND CONTACT	1	C2680	Cu/Sn PLATED
3	CONTACT FOOT	7	C5191	Ag PLATED
2	COAT	1	C2680	Cu/Sn PLATED
1	HOUSING	1	PBT 4815	UL-94V0 (BLACK COLOR)

PROJECTION

RDI Research Develop Innovate

RDI, Inc. 333 North Bedford Road, Suite 135, Mount Kisco, NY 10549

SCALE UNDEFINED

TITLE: MINIATURE DIN CONNECTOR-RoHS COMPLIANT

TOLERANCE EXCEPT AS NOTED

DEC. MILLIMETERS .X±0.10 .XX±0.25 .XXX±0.35

ANG. .X±0.5° .XX±0.3° .XXX±0.2°

DR.	DATE	REF.	SHEET
JIN	08/15/06	P/N: MDJ7PS-NL	1 OF 3

CK.	PRE-	DRAWING NO.	SIZE	REV.
JIN	CO	2937	F	A

THIS DOCUMENT IS OWNED BY, AND THE INFORMATION CONTAINED IN IT IS PROPRIETARY TO, RDI, BY RECEIPT HEREOF THE HOLDER AGREES NOT TO USE THE INFORMATION AND NOT TO DISCLOSE IT TO ANY THIRD PARTY, NOR REPRODUCE THIS DOCUMENT WITHOUT THE WRITTEN CONSENT OF RDI, AND AGREES TO RETURN THIS DOCUMENT FORTHWITH UPON REQUEST.

ECN#	DATE	SYM	REVISION RECORD	AUTH	BY
18-067	06/29/18	A	REVISE THE VIEW OF THE PRODUCT	VF	Tina

1.TECHNICAL

1-1 INSERTION FORCE: 0.8 ~ 5Kg.
1-2 WITHDRAWAL FORCE: 0.8 ~ 4Kg.
1-3 SINGLE CONTACT MAINTENANCE FORCE: 20g MIN.
1-4 CONTACT PULL-OUT STRENGTH.
ANY CONTACT SHALL WITHSTAND A STEADY STRAIGHT PULL OF 2Kg IN THE DIRECTION OF CONTACT BREAK-OUT FOR 20 SECONDS WITHOUT SEPARATION(PULL-OUT).

2. ELECTRICAL

2-1 CURRENT CARRYING CAPACITY: AC 100V 1A MAX.
DC 12V 2A MAX.
2-2 CONTACT RESISTANCE:
TESTER CONDITIONS: ALTERNATING CURRENT OF ALMOST 20MA AND AT A FREQUENCY OF 1K Hz BY THE VOLTAGE DROP METHOD.
2-2-1 INITIAL: BEFORE ANY TESTING
PIN TO CONNECTOR: 30mOHM MAX.
PLUG SHIELD TO CONNECTOR: 50mOHM MAX.
2-2-2 AFTER ENVIRONMENTAL TEST AND LIFE CYCLE TEST
(EXCEPT SALT SPRAYING WATER TEST)
PIN TO CONTACTOR: 200mOHM MAX.
PLUG SHIELD TO CONNECTOR: 500mOHM MAX.
2-3 INSULATION RESISTANCE:
BETWEEN ANY ADJACENT OPEN CONTACTS SHALL NOT BE LESS THAN A VALUE AS SPECIFIED BELOW WITH A 250V DC INSULATION RESISTANCE TEST.
2-3-1 BEFORE ENVIRONMENTAL TEST: 50MOHM MIN.
2-3-2 AFTER ANY ENVIRONMENTAL TEST EXCEPT FOR MOISTURE TEST: 10MOHM MIN.
2-3-3 AFTER MOISTURE TEST 1MOHM MIN.
2-4 DIELECTRIC STRENGTH:
A POTENTIAL OF 250V AC RMS 50/60 Hz SHALL BE APPLIED BETWEEN ANY OPEN CONTACTS FOR ONE MINUTE WITHOUT BREAKDOWN.

3 LIFE CYCLE TEST

CONNECTOR SHALL BE SUBJECT TO 5000CYCLES AT 10 TO 20 CYCLES PER MINUTE WITH NO ELECTRICAL LOAD
3-1 INSERTION FORCE: 0.5 ~ 4.5Kg.
3-2 WITHDRAWAL FORCE: 0.5 ~ 3.5Kg.
3-3 SINGLE CONTACT MAINTENANCE FORCE: 10g MIN.

4 ENVIRONMENT PERFORMANCE

4-1 MOISTURE TEST
AT 90%~95% RH.40°C± 2°C FOR 96 HOURS.AND SHALL THEN BE CONDITIONS AT ROOM AMBIENT CONDITIONS FOR A PERIOD OF 1 TO 2 HOURS
4-2 HEAT TEST
AT -70°C± 2°C FOR 500 HOURS AND SHALL THEN BE CONDITION AT ROOM AMBIENT CONDITIONS FOR A PERIOD OF 1 TO 2 HOURS.
4-3 COLD TEST
AT -40°C± 3°C FOR 500 HOURS AND SHALL THEN BE CONDITION AT ROOM AMBIENT CONDITIONS FOR A PERIOD OF 1 TO 2 HOURS.
4-4 SALT SPRAYING WATER TEST
TEMPERATURE 35°C± 2°C SALT SOLUTION 5% BY WEIGHT FOR 48 HOURS.
4-4-1 CONTACT RESISTANCE:
PIN TO CONTACTOR: 1OHM MAX.
PLUG SHIELD TO CONNECTOR: 10OHM MAX.

4-5 THERMAL SHOCK
UNDER LIST IS 1 CYCLE.MAIE 5 CYCLES.

No.	TEMP	TIME (MIN)
1	-40°C± 3°C	30
2	ROOM AMBIENT CONDITIONS	5
3	70°C± 2°C	30
4	ROOM AMBIENT CONDITIONS	5

4-5-1 CONTACT RESISTANCE: SAME AS 4-4-1
4-5-2 INSULATION RESISTANCE: 1MOHM MIN.

5 OTHERS

5-1 SHIPPING & STORAGE ENVIRONMENT: -40°C TO +80°C
5-2 HEAT RESISTANCE TEST FOR WAVE SOLDERING
THE CONNECTOR SHALL BE TESTED UNDER CONDITION AS SPECIFIED IN ITEMS (1) OR (2) OR (3) BELOW,SHALL NOT OCCUR REMARKABLE DETERIORATION OF THE PART CONSTRUCTED AND ELECTRICAL DAMAGE OR FAILURE TO THE EXTENT OF PRACTICAL USE,SHALL COMPLY WITH PARAGRAPHS 1-1,1-2,2-1,2-2 AND 2-3.
(1) CONDITION OF THE CONNECTOR FOR PRINTED CIRCUIT BOARD: THE CONNECTOR SHALL BE MOUNTED OR ATTACHED TO SPECIFIED THICKNESS COPPER FOIL CLAD PHENOLIC LAMINATED BOARD WITH A SUITABLE HOLE LAYOUT TO MEET TERMINAL ARRANGEMENT OF THE CONNECTOR TESTED,THE AREA TO BE SOLDERED OF THE TERMINAL SHALL BE IMMERSED INTO MOLEN SOLDER AT A TEMPERATURE OF 260°C± 3°C FOR A PERIOD OF 10 SECONDS
(2) WAVE SOLDERING CONDITION: REFERENCE STANDARDS JIS J 0050,L0054
WAVE SOLDERING CONDITION:

PRETREATMENT		JEDEc LEAES: 30°C 60%RH 92 HOR 6°C 60%RH 40h
PREHEATING	TEMP: T1	100°C ~ 120°C
	TEMP: T2	120°C
	TIME: t1	40 SECS
SOLDERING	TEMP: T3	260°C ± 3°C
	TIME: t2	10 SECS
FREQUENCY		2 TIMES

ECN#	DATE	SYM	REVISION RECORD	AUTH	BY
18-067	06/29/18	A	REVISE THE VIEW OF THE PRODUCT	VF	Tina

PROJECTION

SCALE UNDEFINED
TOLERANCE EXCEPT AS NOTED
DEC. MILLIMETERS .X±0.10 .XX±0.25 .XXX±0.35
ANG. .X±0.5° .XX±0.3° .XXX±0.2°

RDI Research Develop Innovate
RDI, Inc. 333 North Bedford Road, Suite 135, Mount Kisco, NY 10549

TITLE: MINIATURE DIN CONNECTOR-RoHS COMPLIANT

DR.	DATE	REF.	SHEET
JIN	08/15/06	P/N: MDJ7PS-NL	2 OF 3

CK.	PRE-	DRAWING NO.	SIZE	REV.
JIN	CO	2937	F	–

THIS DOCUMENT IS OWNED BY, AND THE INFORMATION CONTAINED IN IT IS PROPRIETARY TO, RDI, BY RECEIPT HEREOF THE HOLDER AGREES NOT TO USE THE INFORMATION AND NOT TO DISCLOSE IT TO ANY THIRD PARTY, NOR REPRODUCE THIS DOCUMENT WITHOUT THE WRITTEN CONSENT OF RDI, AND AGREES TO RETURN THIS DOCUMENT FORTHWITH UPON REQUEST.

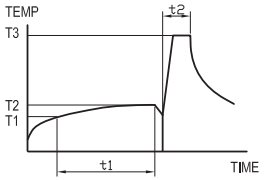

(3) IR REFLOW CONDITION: (SUITABLE FOR SMT LEAD-FREE TYPE)

THE REFLOW CONDITION:

PRETREATMENT		JADED LEADS: 30°C 60%RH 92h OR 6°C 60%RH 40h
PREHEATING	TEMP: T1	170°C
	TEMP: T2	180°C
	TIME: t1	120 SECS
SOLDERING	TEMP: T3	220°C
	TIME: t2	60 SECS
PEAK HEATING	TEMP: T4	260°C
	TIME: t3	MORE THAN 245°C 10 SECS
FREQUENCY		1 TIMES

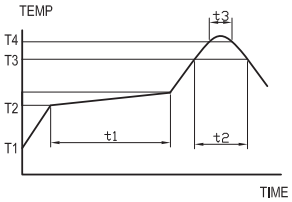

(3-1) CRITERIA:

1. COMPONENT UNITS ARE FREE OF CRACKS,SEPARATION,OR SIMILAR EXTERNAL DEFECTS.
2. THE CHARACTERISTIC REQUIREMENTS ARE AS SPECIFIED IN THE PRODUCT STANDARD.

(4) HAND SOLDERING:

THE TERMINAL OF JACK TESTED SHALL BE HEATED TO 2 MILLIMETERS FROM A TIP OF THE TERMINAL BY A SOLDERING IRON TO HAVE A CAPACITY OF 60 WATTS CONSUMPTION AT A TEMPERATURE CONTROLLED OF 350°C± 10°C FOR A PERIOD OF 3± 0.5 SECONDS.

5-3 SOLDERABILITY TEST

THE TERMINAL OF JACK DIPPED INTO SOLDERING FLUX FOR 5~10 SECONDS AND THEN IMMERSED INTO MOLTEN SOLDER TERMINAL AT A CONTROLLED TEMPERATURE OF 245°C± 3°C FOR 2± 0.5 SECONDS.THE TEST AREA SHALL BE COVERED MORE THAN THREE QUARTER OF IMMERSED AREA WITH FRESH SOLDER.DIPPING AND UPLIFT SPEED: 25mm/s(REFERENCE VALUE).

6 MEASURING CONDITION

TEMPERATURE: FROM 5°C TO 35°C

RELATIVE HUMIDITY: FROM 40% TO 85%

7 OPERATING TEMPERATURE: -10°C TO 85°C

8 GREEN PRODUCT CERTIFICATION:

8-1 SUITABLE FOR "ROHS DIRECTIVE" & "SE-01-001" STANDARD

8-2 BANNED SUBSTANCES:

BANNED SUBSTANCES	THRESHOLD LIMIT(ppm)	PROHIBITED DATE
CADMIUM(Cd)	5 ppm	PROHIBITED IMMEDIATELY
LEAD(Pb)	PLASTIC,PAINT,PACKAGE,LABEL,MYLAR<100ppm	PROHIBITED IMMEDIATELY
	METAL: STEEL ALLOYS CAN CONTAIN UP TO 0.35% (3500ppm) LEAD BY WEIGHT,ALUMINIUM ALLOYS CAN CONTAIN UP TO 0.4% (4000ppm) LEAD BY WEIGHT,AND COPPER ALLOYS CAN CONTAIN UP TO 4% (40000 ppm) LEAD BY WEIGHT.	PROHIBITED IMMEDIATELY
	SOLDERING & PLATING WITH LEAD <1000ppm	2004.12.01
	PACKING<100ppm	PROHIBITED IMMEDIATELY
MERCURY (Hg)	5 ppm	PROHIBITED IMMEDIATELY
CHROMIUM VI (Cr)	5 ppm	PROHIBITED IMMEDIATELY
PCB	5 ppm	PROHIBITED IMMEDIATELY
PCN	5 ppm	PROHIBITED IMMEDIATELY
CP	5 ppm	PROHIBITED IMMEDIATELY
MIREX	5 ppm	PROHIBITED IMMEDIATELY
PBB	5 ppm	PROHIBITED IMMEDIATELY
PBDE	5 ppm	PROHIBITED IMMEDIATELY

9 NOTE:

THIS SPECIFICATION SHALL BE READ IN CONJUNCTION WITH THE APPLICABLE PART DRAWING AND THE INDIVIDUAL SPECIFICATION,IF ANY.WHENEVER THIS SPECIFICATION CONFLICTS WITH THE APPLICABLE PART DRAWING AND/OR THE INDIVIDUAL SPECIFICATION,THE LATTER SHALL GOVERN.

ECN#	DATE	SYM	REVISION RECORD	AUTH	BY
18-067	06/29/18	A	REVISE THE VIEW OF THE PRODUCT	VF	Tina

PROJECTION

SCALE UNDEFINED

TOLERANCE EXCEPT AS NOTED

DEC. MILLIMETERS .X±0.10 .XX±0.25 .XXX±0.35

ANG. .X±0.5° .XX±0.3° .XXX±0.2°

RDI Research Develop Innovate

RDI, Inc. 333 North Bedford Road, Suite 135, Mount Kisco, NY 10549

TITLE: MINIATURE DIN CONNECTOR-RoHS COMPLIANT

DR.	DATE	REF.	SHEET
JIN	08/15/06	P/N: MDJ7PS-NL	3 OF 3

CK.	PRE-	DRAWING NO.	SIZE	REV.
JIN	CO	2937	F	–

THIS DOCUMENT IS OWNED BY, AND THE INFORMATION CONTAINED IN IT IS PROPRIETARY TO, RDI, BY RECEIPT HEREOF THE HOLDER AGREES NOT TO USE THE INFORMATION AND NOT TO DISCLOSE IT TO ANY THIRD PARTY, NOR REPRODUCE THIS DOCUMENT WITHOUT THE WRITTEN CONSENT OF RDI, AND AGREES TO RETURN THIS DOCUMENT FORTHWITH UPON REQUEST.