MDS-222

Surface Mount Double-Balanced Mixer, 200 KHz - 200 MHz

Rev. V4

Features

- Fully Hermetic Package
- Three Decade Coverage
- Impedance: 50 Ohms Nominal
- Maximum Input Power: 400 mW Max, Derated to 85°C @ 3.2 mW/°C
- X Port Current: 50 mA Max.
- MIL-STD-883 Screening Available

Description

Transformers convert the LO and RF paths to balanced lines connecting to a medium barrier, Schottky diode ring quad. These transformers help provide excellent isolation between ports. Conversion loss is low. The direct connection of the IF port to the diode quad allows these mixers to be used as phase detectors and bi-phase modulators.

SF-1

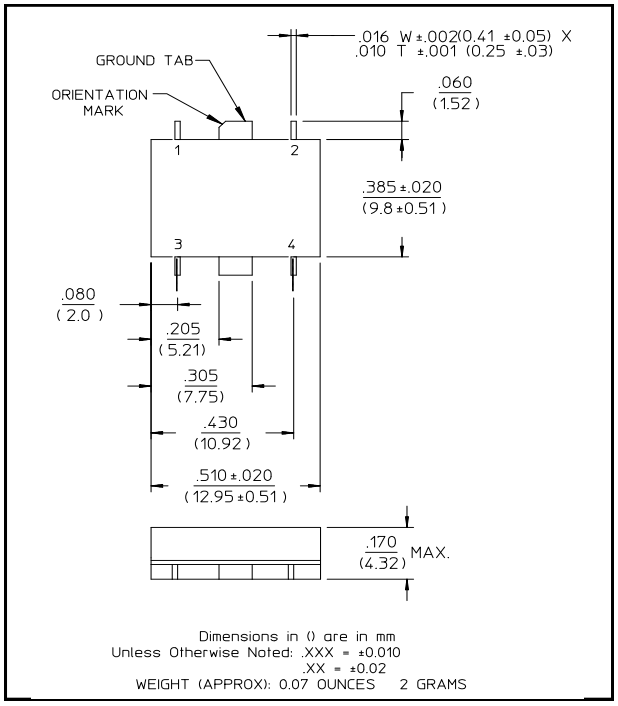

Pin Configuration

Pin No.	Function	Pin No.	Function
1	GND	3	LO
2	IF	4	RF

Electrical Specifications[1]: T_A = -55°C to +85°C

Parameter	Test Conditions	Frequency	Units	Min	Typ	Max
Frequency Range	RF, LO Ports IF Port	0.2 - 200 DC - 200	MHz MHz	—	—	—
Conversion Loss		0.2 - 50 MHz 50 - 200 MHz	dB dB	— —	— —	6.0 7.5
Isolation	LO to RF	0.2 - 50 MHz 50 - 200 MHz	dB dB	35 30	— —	— —
	LO to IF	0.2 - 50 MHz 50 - 200 MHz	dB dB	35 25	— —	— —
	RF to IF	0.2 - 50 MHz 50 - 200 MHz	dB dB	25 20	— —	— —
DC Polarity	Negative	—	—	—	—	—
DC Offset	—	—	mV	—	≤3	—
RF Input[2]	1 dB Compression 1 dB Desensitization	— —	dBm dBm	— —	+2 0	— —
SSB Noise Figure	Within 1 dB of Conversion Loss Max	—	—	—	—	—
Typical Two-Tone IM Ratio	with a –10 dBm input, each input, 25 MHz and 35 MHz IF	100 - 200 MHz 200 - 300 MHz	dB dB	— —	50 36	— —

1. All specifications apply when operated at +7 dBm available LO power with 50 ohm source and load impedance.
2. Measured at 100 MHz.

M/A-COM Technology Solutions Inc. (MACOM) and its affiliates reserve the right to make changes to the product(s) or information contained herein without notice.
Visit www.macom.com for additional data sheets and product information.

For further information and support please visit:
https://www.macom.com/support

Surface Mount Double-Balanced Mixer, 200 KHz - 200 MHz

Rev. V4

Typical Performance Curves

Conversion Loss

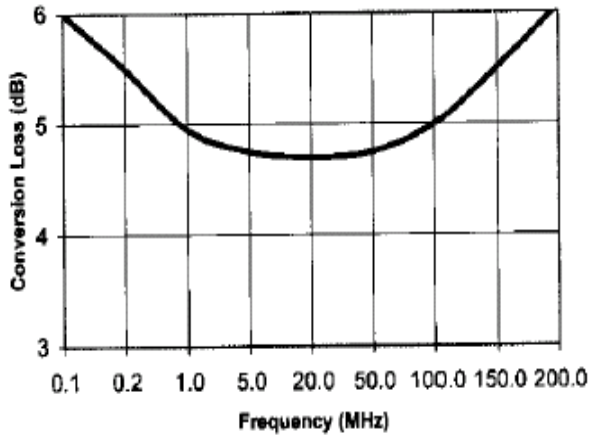

Isolation

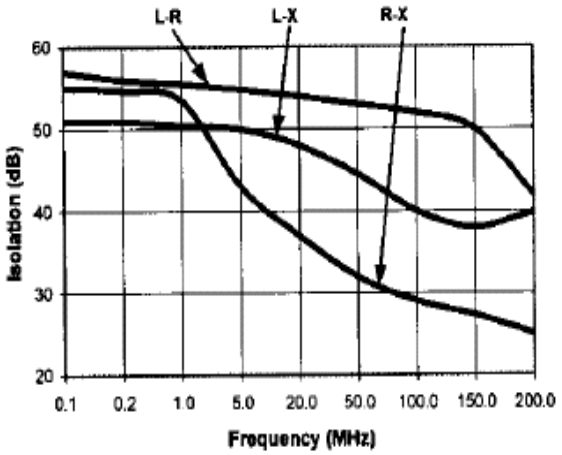

Conversion Loss vs. LO Power

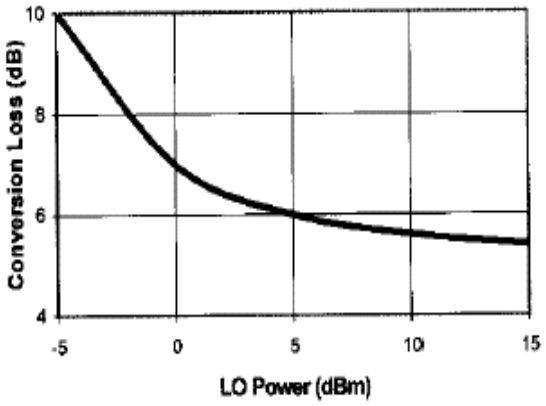

Bottom View of SF-1

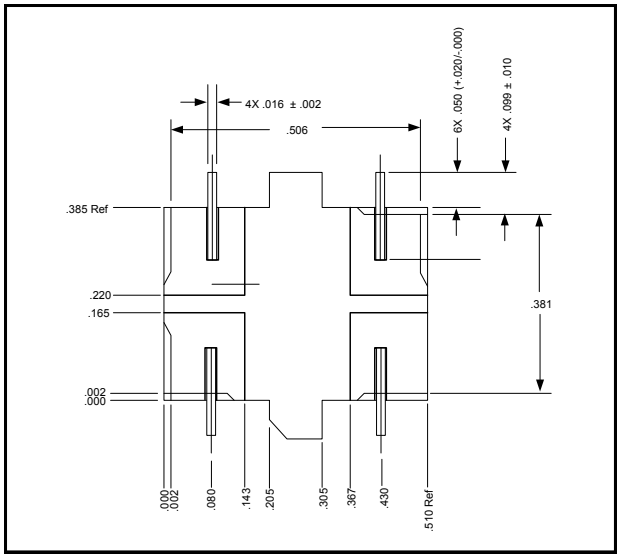

Ordering Information

Part Number	Package
MDS-222 PIN	SF-1

M/A-COM Technology Solutions Inc. (MACOM) and its affiliates reserve the right to make changes to the product(s) or information contained herein without notice.
Visit www.macom.com for additional data sheets and product information.

For further information and support please visit:
https://www.macom.com/support

M/A-COM Technology Solutions Inc. All rights reserved.
Information in this document is provided in connection with M/A-COM Technology Solutions Inc ("MACOM") products. These materials are provided by MACOM as a service to its customers and may be used for informational purposes only. Except as provided in MACOM's Terms and Conditions of Sale for such products or in any separate agreement related to this document, MACOM assumes no liability whatsoever. MACOM assumes no responsibility for errors or omissions in these materials. MACOM may make changes to specifications and product descriptions at any time, without notice. MACOM makes no commitment to update the information and shall have no responsibility whatsoever for conflicts or incompatibilities arising from future changes to its specifications and product descriptions. No license, express or implied, by estoppels or otherwise, to any intellectual property rights is granted by this document.

THESE MATERIALS ARE PROVIDED "AS IS" WITHOUT WARRANTY OF ANY KIND, EITHER EXPRESS OR IMPLIED, RELATING TO SALE AND/OR USE OF MACOM PRODUCTS INCLUDING LIABILITY OR WARRANTIES RELATING TO FITNESS FOR A PARTICULAR PURPOSE, CONSEQUENTIAL OR INCIDENTAL DAMAGES, MERCHANTABILITY, OR INFRINGEMENT OF ANY PATENT, COPYRIGHT OR OTHER INTELLECTUAL PROPERTY RIGHT. MACOM FURTHER DOES NOT WARRANT THE ACCURACY OR COMPLETENESS OF THE INFORMATION, TEXT, GRAPHICS OR OTHER ITEMS CONTAINED WITHIN THESE MATERIALS. MACOM SHALL NOT BE LIABLE FOR ANY SPECIAL, INDIRECT, INCIDENTAL, OR CONSEQUENTIAL DAMAGES, INCLUDING WITHOUT LIMITATION, LOST REVENUES OR LOST PROFITS, WHICH MAY RESULT FROM THE USE OF THESE MATERIALS.

MACOM products are not intended for use in medical, lifesaving or life sustaining applications. MACOM customers using or selling MACOM products for use in such applications do so at their own risk and agree to fully indemnify MACOM for any damages resulting from such improper use or sale.